JAGUAR

Workshop Manual

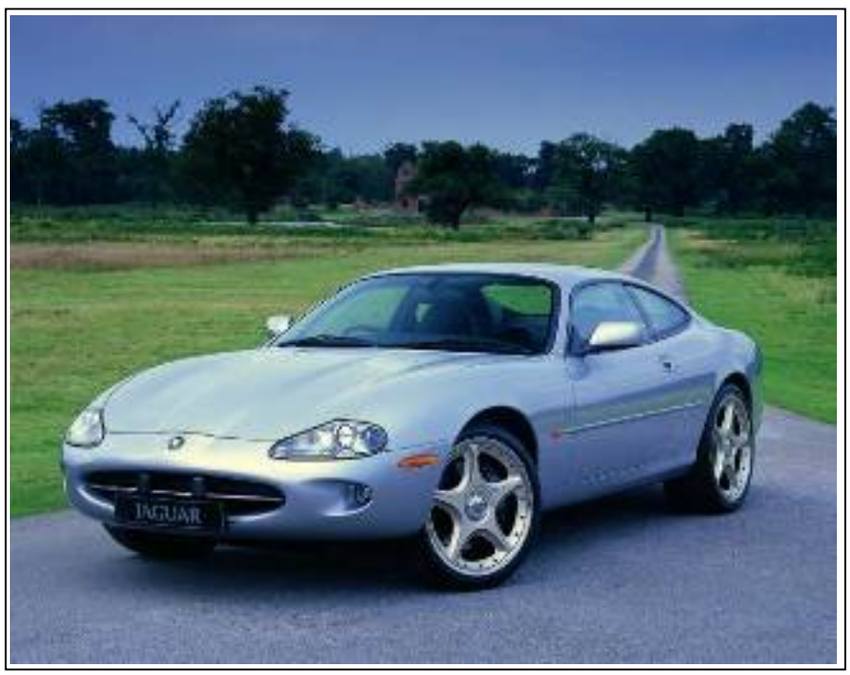

XK8

2003 to 2006

4.2L, 4.2L S/C

VIN A30645 to A48684

TABLE OF CONTENTS

1: General Information

100: Service Information

100-00: General Information
Description and Operation
General Service Information
Terminology Glossary

100-01: Identification Codes
Description and Operation
Identification Codes

100-02: Jacking and Lifting
Description and Operation
Jacking
Safety Precautions
Vehicle Recovery
General Procedures
Using the Vehicle Jack
Using the Workshop Jack

2: Chassis

204: Suspension

204-00: Suspension System - General Information
Specification
Description and Operation
Suspension System
General Procedures
Front Camber Adjustment (57.65.06)
Front Caster Adjustment (57.65.05)

Front Camber and Caster Adjustment (57.65.02)
Rear Toe Adjustment (57.65.08)
Wheel Bearing Circlip Inspection
Wheel Bearing Inspection

204-01: Front Suspension
Specification
Description and Operation
Front Suspension
Removal and Installation
Ball Joint (60.15.02)
Front Lower Arm and Rear Lower Arm Assembly (60.35.02)
Front Stabilizer Bar (60.10.01)
Front Stabilizer Bar Bushing (60.10.04)
Front Stabilizer Bar Link (60.10.02)
Front Wheel Bearing (60.25.40)
Lower Arm Bushing (60.35.45)
Shock Absorber and Spring Assembly (60.30.02)
Shock Absorber Bushing (60.30.16) (60.30.23)
Rear Lower Arm (60.35.54)
Upper Arm Bushing
Wheel Hub
Wheel Knuckle (60.25.23)
Wheel Knuckle and Wheel Hub Ass

204-02: Rear Suspension
Specification
Description and Operation
Rear Suspension
Removal and Installation
Axle Bump Stop (64.30.15)
Rear Suspension and Axle Assembly (64.25.01)
Rear Shock Absorber (64.30.02)
Shock Absorber Lower Bushing (64.30.39)
Spring (64.20.01)

Rear Stabilizer Bar (64.35.08)
Rear Stabilizer Bar Bushing (64.35.18)
Rear Stabilizer Bar Link (64.35.24)
Stabilizer Bar Link Bushing (64.35.25)
Stabilizer Bar Mounting Frame (64.25.12) - 2-Door
Stabilizer Bar Mounting Frame (64.25.12) - Convertible
Stabilizer Bar Mounting Frame Bushing (64.25.13) - 2-Door
Stabilizer Bar Mounting Frame Bushing (64.25.13) - Convertible
Rear Wheel Bearing (64.15.14)
Wheel Hub Seal (64.15.15)
Wheel Knuckle Bushing (64.15.24)

204-04: Wheels and Tires
Specification
Description and Operation
Wheels and Tires
Diagnosis and Testing
Wheels and Tires
Removal and Installation
Wheel and Tire (74.20.05)

204-05: Vehicle Dynamic Suspension
Description and Operation
Vehicle Dynamic Suspension
Diagnosis and Testing
Vehicle Dynamic Suspension
Removal and Installation
Adaptive Damping Module (86.56.35)

205: Driveline

205-00: Driveline System - General Information
Description and Operation
Driveline System
Diagnosis and Testing
Driveline System

205-01: Driveshaft
Specification
Description and Operation
Driveshaft
Diagnosis and Testing
Driveshaft
Removal and Installation
Driveshaft (47.15.01)

205-02: Rear Drive Axle/Differential
Specification
Description and Operation
Rear Drive Axle and Differential
General Procedures
Differential Output Shaft End Float Check (51.10.24)
In-Vehicle Repair
Axle Shaft (47.10.01)
Differential Output Shaft Bearing (51.10.22)
Drive Pinion Flange and Drive Pinion Seal (51.20.01)
Removal and Installation
Axle Assembly (51.25.13)

206: Brake System

206-00: Brake System - General Information
Specification
Description and Operation
Brake System
Diagnosis and Testing
Brake System
General Procedures
Brake System Bleeding (70.25.03) - Vehicles With: Standard Brakes
Brake System Bleeding (70.25.03) - Vehicles With: High Performance Brakes
Front Brake Disc Runout Check - Vehicles With: Standard Brakes
Front Brake Disc Runout Check - Vehicles With: High Performance Brakes
Rear Brake Disc Runout Check (70.12.36) - Vehicles With: Standard Brakes
Rear Brake Disc Runout Check (70.12.36) - Vehicles With: High Perf Brakes

206-03: Front Disc Brake
Specification
Description and Operation
Front Disc Brake
Removal and Installation
Brake Caliper (70.55.02) - Vehicles With: Standard Brakes
Brake Caliper (70.55.02) - Vehicles With: High Performance Brakes
Brake Disc (70.10.10) - Vehicles With: Standard Brakes
Brake Disc (70.10.10) - Vehicles With: High Performance Brakes
Brake Pads (70.40.02) - Vehicles With: Standard Brakes
Brake Pads (70.40.02) - Vehicles With: High Performance Brakes

206-04: Rear Disc Brake
Specification
Description and Operation
Rear Disc Brake
Removal and Installation
Brake Caliper (70.55.03) (70.55.25) - Vehicles With: Standard Brakes
Brake Caliper (70.55.03) (70.55.25) - Vehicles With: High Performance Brakes
Brake Disc (70.10.11) - Vehicles With: Standard Brakes
Brake Disc (70.10.11) - Vehicles With: High Performance Brakes
Brake Pads (70.40.03) - Vehicles With: Standard Brakes
Brake Pads (70.40.03) - Vehicles With: High Performance Brakes

206-05: Parking Brake and Actuation
Specification
Description and Operation
Parking Brake
General Procedures
Parking Brake Cable Adjustment (70.35.10)
Parking Brake Shoe and Lining Adjustment (70.35.37)
Removal and Installation
Parking Brake Control (70.35.08)
Parking Brake Control Shroud (76.13.63)
Parking Brake Front Cable (70.35.14)
Parking Brake Linkage Lever (70.35.22)

Parking Brake Linkage Lever Mounting Plate (70.35.42)
Parking Brake Linkage Return Springs (70.35.41)
Parking Brake Linkage Rod (70.35.40)
Parking Brake Rear Cables
Parking Brake Shoes (70.40.05)

206-06: Hydraulic Brake Actuation
Specification
Description and Operation
Hydraulic Brake Actuation
Removal and Installation
Brake Fluid Reservoir (70.30.16)
Brake Master Cylinder (70.30.08)
Brake Pedal
Brake Pedal and Bracket (70.35.03)
Brake Pedal and Bracket, Brake Booster and Brake Master Cylinder (70.35.39)

206-07: Power Brake Actuation
Specification
Description and Operation
Brake Booster
Removal and Installation
Brake Booster (70.50.17)
Brake Booster and Brake Master Cylinder (70.50.18)

206-09: Anti-Lock Control - Stability Assist
Specification
Description and Operation
Anti-Lock Control - Stability Assist
Diagnosis and Testing
Anti-Lock Control - Stability Assist
Removal and Installation
Anti-Lock Brake System (ABS) Module (70.60.02)
Brake Master Cylinder Pressure Transducer
Front Wheel Speed Sensor (70.60.03)
Front Wheel Speed Sensor Ring
Hydraulic Control Unit (HCU) (70.60.18) (70.60.19)

Rear Wheel Speed Sensor (70.60.04)
Steering Wheel Rotation Sensor (86.56.58)
Yaw Rate Sensor and Accelerometer (86.56.64)

211: Steering System

211-00: Steering System - General Information
Specification
Description and Operation
Steering System
Diagnosis and Testing
Steering System
General Procedures
Power Steering System Bleeding (57.15.02)
Power Steering System Flushing (57.15.08)
Steering Gear Centralizing

211-02: Power Steering
Specification
Description and Operation
Power Steering
Diagnosis and Testing
Power Steering
Removal and Installation
Power Steering Control Valve Actuator (57.10.32)
Power Steering Fluid Cooler (57.15.11)
Power Steering Fluid Reservoir (57.15.08)
Power Steering Pump (57.20.14)
Steering Gear (57.10.01)
Steering Gear Bushing (57.10.30)

211-03: Steering Linkage
Specification
Description and Operation
Steering Linkage

211-04: Steering Column
Specification
Description and Operation
Steering Column
Diagnosis and Testing
Steering Column
Removal and Installation
Steering Column (57.40.01)
Steering Column Control Relay (57.40.34)
Steering Column Lower Shaft (57.40.05)
Steering Wheel (57.60.01)
Telescopic Motor
Tilt Motor

211-05: Steering Column Switches
Specification
Description and Operation
Steering Column Switches
Removal and Installation
Ignition Switch (86.65.03)
Steering Column Control Switch (57.40.33)
Steering Column Lock Module (86.80.36)
Steering Column Multifunction Switch (86.65.92)
Steering Column Multifunction Switch Mounting Bracket (76.46.33)

3: Powertrain

303: Engine

303-00: Engine System - General Information
Specification
Description and Operation
Engine
Diagnosis and Testing
Engine
General Procedures

Bearing Inspection
Camshaft Bearing Journal Clearance
Camshaft Bearing Journal Diameter
Camshaft End Play
Camshaft Lobe Lift
Camshaft Surface Inspection
Connecting Rod Cleaning
Connecting Rod Large End Bore
Crankshaft End Play
Crankshaft Main Bearing Journal Clearance
Cylinder Bore Out-of-Round
Cylinder Head Distortion
Exhaust Manifold Cleaning and Inspection
Piston Inspection
Piston Pin Diameter
Piston Pin to Bore Diameter
Piston Ring End Gap
Piston Ring-to-Groove Clearance
Valve Spring Free Length
Valve Stem Diameter
Leakage Test Using Smoke Test Equipment

303-01: Engine
Specification
Description and Operation
Engine
Diagnosis and Testing
Engine
General Procedures
Valve Clearance Adjustment (12.29.48)
Valve Clearance Check (12.29.47)
In-Vehicle Repair
Camshafts LH (12.13.19)
Crankshaft Front Seal (12.21.14)
Crankshaft Pulley (12.21.09)
Crankshaft Rear Seal (12.21.20)
Cylinder Head LH (12.29.02)

Engine Front Cover (12.65.01)
Engine Mount LH (12.45.01)
Engine Mount RH (12.45.03)
Exhaust Manifold RH (30.15.56)
Flexplate (12.53.13)
Intake Manifold (30.15.01)
Oil Cooler (12.60.68)
Oil Pan (12.60.44)
Oil Pressure Switch (88.25.07)
Oil Pump (12.60.26)
Secondary Timing Chain Tensioner
Timing Drive Components (12.65.13)
Valve Cover LH (12.29.43)
Valve Cover RH (12.29.44)
Removal
Engine (12.41.01)
Disassembly
Engine
Disassembly and Assembly of Subassemblies
Cylinder Head (12.29.22)
Assembly
Engine
Installation
Engine (12.41.01)

303-03A: Engine Cooling
Specification
Description and Operation
Engine Cooling
General Procedures
Cooling System Draining, Filling and Bleeding
Cooling System Draining and Vacuum Filling
Cooling System Flushing
Cooling System Backflushing
Removal and Installation
Coolant Expansion Tank (26.15.01) - V8 4.2L Petrol
Coolant Expansion Tank (26.15.01) - V8 S/C 4.2L Petrol

Cooling Fan Module (26.25.38)
Cooling Fan Motor and Shroud (26.25.25)
Degas Bottle (26.15.03)
Engine Coolant Level Switch (26.40.11)
Radiator (26.40.01) - V8 4.2L Petrol
Radiator (26.40.01) - V8 S/C 4.2L Petrol
Thermostat (26.45.07) - V8 4.2L Petrol
Thermostat (26.45.07) - V8 S/C 4.2L Petrol
Water Pump (26.50.01) - V8 4.2L Petrol
Water Pump (26.50.01) - V8 S/C 4.2L Petrol

303-03B: Supercharger Cooling
Specification
Description and Operation
Supercharger Cooling
Diagnosis and Testing
Supercharger Cooling
General Procedures
Supercharger Cooling System Draining, Filling and Bleeding
Removal and Installation
Radiator
Water Pump

303-04: Fuel Charging and Controls
Specification
Description and Operation
Fuel Charging and Controls
Diagnosis and Testing
Fuel Charging and Controls
Removal and Installation
Fuel Injection Supply Manifold (19.60.13)
Fuel Injector (18.10.01)
Throttle Body (19.70.04)

303-05: Accessory Drive
Specification
Description and Operation

Accessory Drive
Diagnosis and Testing
Accessory Drive
Removal and Installation
Accessory Drive Belt (12.10.40)
Accessory Drive Belt Idler Pulley (12.10.43)
Accessory Drive Belt Tensioner (12.10.41)
Supercharger Belt (18.50.08)
Supercharger Belt Idler Pulley (18.50.09)
Supercharger Belt Tensioner (18.50.24)

303-06: Starting System
Specification
Description and Operation
Starting System
Diagnosis and Testing
Starting System
Removal and Installation

303-07: Engine Ignition
Specification
Description and Operation
Engine Ignition
Diagnosis and Testing
Engine Ignition
Removal and Installation
Ignition Coil-On-Plug RH (18.20.43)

303-08: Engine Emission Control
Specification
Description and Operation
Engine Emission Control
Diagnosis and Testing
Engine Emission Control
Removal and Installation
Exhaust Gas Recirculation (EGR) Valve (17.45.01)
Exhaust Manifold to Exhaust Gas Recirculation (EGR) Valve Tube (17.45.11)

303-12: Intake Air Distribution and Filtering

Specification

Description and Operation

Intake Air Distribution and Filtering

Diagnosis and Testing

Intake Air Distribution and Filtering

Removal and Installation

Air Cleaner (19.10.05)

Air Cleaner Element (19.10.08)

Air Cleaner Outlet Pipe (19.10.31)

Charge Air Cooler RH (18.50.18)

Supercharger (18.50.15)

Supercharger Outlet Pipe (18.50.16)

303-13: Evaporative Emissions

Specification

Description and Operation

Evaporative Emissions

Diagnosis and Testing

Evaporative Emissions

Removal and Installation

Evaporative Emission Canister (17.15.13) - Vehicles Without: On-Board Refueling Vapor Recovery (ORVR)

Evaporative Emission Canister (17.15.13) - Vehicles With: On-Board Refueling Vapor Recovery (ORVR)

Evaporative Emission Canister Purge Valve (17.15.30)

Evaporative Emission Canister Vent Solenoid (17.15.45) - Vehicles With: On-Board Refueling Vapor Recovery (ORVR)

Fuel Tank Pressure Sensor (19.55.31) - Vehicles With: On-Board Refueling Vapor Recovery (ORVR)

Fuel Vapor Vent Valve Housing (19.55.24) - Vehicles Without: On-Board Refueling Vapor Recovery (ORVR)

Fuel Vapor Vent Valve Housing (19.55.24) - Vehicles With: On-Board Refueling Vapor Recovery (ORVR)

303-14: Electronic Engine Controls
Specification
Description and Operation
Electronic Engine Controls
Diagnosis and Testing
Electronic Engine Controls
General Procedures
Powertrain Control Module (PCM) Long Drive Cycle Self-Test
Powertrain Control Module (PCM) Short Drive Cycle Self-Test
Removal and Installation
Accelerator Pedal Position (APP) Sensor (18.31.13)
Camshaft Position (CMP) Sensor RH (18.31.11)
Catalyst Monitor Sensor LH (18.30.81)
Crankshaft Position (CKP) Sensor (18.30.12)
Engine Control Module (ECM) (18.30.01)
Engine Coolant Temperature (ECT) Sensor (18.30.10) - V8 4.2L Petrol
Engine Coolant Temperature (ECT) Sensor (18.30.10) - V8 S/C 4.2L Petrol
Fuel Rail Pressure (FRP) Sensor (18.30.98)
Fuel Temperature Sensor (18.30.99)
Heated Oxygen Sensor (HO2S) LH (18.30.79)
Heated Oxygen Sensor (HO2S) RH (18.30.78)
Intake Air Temperature (IAT) Sensor (18.30.52)
Knock Sensor (KS) LH (18.30.92)
Manifold Absolute Pressure (MAP) Sensor (18.30.86)
Mass Air Flow (MAF) Sensor (18.30.15)
Oil Temperature Sensor (18.31.01)
Variable Camshaft Timing (VCT) Oil Control Solenoid (18.30.90)

307: Automatic Transmission/Transaxle

307-01: Automatic Transmission/Transaxle
Specification
Description and Operation
Transmission Description
Diagnosis and Testing
Diagnostic Strategy
General Procedures

Transmission Fluid Drain and Refill (44.24.02)
Transmission Fluid Level Check
In-Vehicle Repair
Extension Housing Seal (44.20.18)
Transmission Fluid Pan, Gasket and Filter (44.24.07)
Transmission Control Module (TCM) and Main Control Valve Body
Removal
Transmission (44.20.01)
Disassembly and Assembly of Subassemblies
Input Shaft Seal (44.32.07)
Installation
Transmission (44.20.01)

307-02: Transmission/Transaxle Cooling
Specification
Description and Operation
Transmission Cooling
Diagnosis and Testing
Transmission Cooling
Removal and Installation
Transmission Fluid Cooler Return Tube (44.24.13) (44.24.29)
Transmission Fluid Cooler Supply Tube (44.24.14) (44.24.28)

307-05: Automatic Transmission/Transaxle External Controls
Specification
Description and Operation
External Controls
Diagnosis and Testing
External Controls
General Procedures
Brake Shift Interlock Actuator Manual Override
Selector Lever Cable Adjustment (44.15.07)
Transmission Control Switch Adjustment (44.15.13)
Removal and Installation
Brake Shift Interlock Actuator (44.15.48)
Selector Lever Cable and Bracket (44.15.08)
Selector Lever Indicator Assembly (44.15.14)

Transmission Control Switch (TCS) (44.15.12)
Selector Lever Assembly (44.15.04)
Selector Lever Knob (44.15.06)
Disassembly and Assembly
Selector Lever Assembly (44.15.05)

309: Exhaust System

309-00: Exhaust System
Specification
Description and Operation
Exhaust System
Diagnosis and Testing
Exhaust System
Removal and Installation
Catalytic Converter LH (17.50.15)
Catalytic Converter RH (17.50.16)
Front Muffler (30.10.18)
Muffler (30.10.16)
Muffler and Tailpipe (30.10.52)

310: Fuel System

310-00: Fuel System - General Information
Specification
General Procedures
Fuel System Pressure Release (19.50.02)
Fuel Tank Draining - Vehicles Without: On-Board Refueling Vapor Recovery
Fuel Tank Draining - Vehicles With: On-Board Refueling Vapor Recovery (ORVR)
Quick Release Coupling - Type A/Type B
Spring Lock Couplings

310-01: Fuel Tank and Lines
Specification
Description and Operation
Fuel Tank and Lines
Diagnosis and Testing

Fuel Tank and Lines
Removal and Installation
Fuel Filter (19.25.02)
Fuel Pump Driver Module (18.30.63)
Fuel Pump Module (19.45.08)
Fuel Tank (19.55.01)
Inertia Fuel Shutoff (IFS) Switch (18.30.35)

310-02: Acceleration Control
Specification
Description and Operation
Acceleration Control
Diagnosis and Testing
Acceleration Control
General Procedures
Accelerator Cable Adjustment (12.20.05)
Removal and Installation
Accelerator Cable (19.20.06)
Accelerator Pedal (19.20.01)

310-03: Speed Control
Specification
Description and Operation
Speed Control
Diagnosis and Testing
Speed Control
General Procedures
Speed Control Module Alignment
Removal and Installation
Speed Control Module (19.75.26)

4: Electrical

412: Climate Control System

412-00: Climate Control System - General Information

- Specification
- Description and Operation
  - Climate Control System
- Diagnosis and Testing
  - Climate Control System
- General Procedures
  - Air Conditioning (A/C) System Flushing
  - Air Conditioning (A/C) System Recovery, Evacuation and Charging (82.30.30)
  - Contaminated Refrigerant Handling
  - Electronic Leak Detection
  - Fluorescent Dye Leak Detection
  - Inspection and Assembly Requirements
  - Manifold Gauge Set Connection
  - Refrigerant Oil Adding
  - Refrigerant System Tests

412-01: Air Distribution and Filtering

- Description and Operation
  - Air Distribution and Filtering
- Diagnosis and Testing
  - Air Distribution and Filtering
- Removal and Installation
  - Center Registers (82.20.38)
  - Driver Side Blower Motor (82.25.56)
  - Passenger Side Blower Motor (82.25.55)
  - Pollen Filter (76.10.09)

412-02: Heating and Ventilation

- Description and Operation
  - Heating and Ventilation
- Diagnosis and Testing
  - Heating and Ventilation

Removal and Installation
Heater Core (80.20.29)
Heater Core and Evaporator Core Housing (82.25.21)

412-03: Air Conditioning
Specification
Description and Operation
Air Conditioning
Diagnosis and Testing
Air Conditioning
Removal and Installation
Air Conditioning (A/C) Compressor (82.10.20)
Condenser Core (82.15.07)
Evaporator Core (82.25.20)
Pressure Cutoff Switch (82.10.32)
Receiver Drier (82.17.01)

412-04: Control Components
Description and Operation
Control Components
Diagnosis and Testing
Control Components
Removal and Installation
Air Discharge Temperature Sensor (82.20.64)
Climate Control Assembly (82.20.07)
Cold Air Bypass Blend Door Actuator (82.20.86)
Defrost Vent/Register Blend Door Actuator (82.20.84)
Footwell Vent/Duct Blend Door Actuator (80.20.20 or 82.20.85)
Instrument Panel Blend Door Actuator (82.20.83)

413: Instrumentation and Warning Systems

413-00: Instrument Cluster and Panel Illumination
Description and Operation
Instrument Cluster and Panel Illumination
Removal and Installation
High Beam Indicator Bulb (86.45.65)

Instrument Cluster Bulb (86.46.22)
Instrument Panel Console Instrument Cluster Bulb (86.46.21)

413-01: Instrument Cluster
Description and Operation
Instrument Cluster
Diagnosis and Testing
Instrument Cluster
Removal and Installation
Instrument Cluster (88.20.01)
Instrument Cluster Lens (88.20.28)
Instrument Panel Console Instrument Cluster (88.20.29)
Instrument Panel Console Instrument Cluster Lens (88.20.32)

413-06: Horn
Description and Operation
Horn
Diagnosis and Testing
Horn
Removal and Installation
Horn (86.30.02) (86.30.10)

413-07: Clock
Description and Operation
Clock
Diagnosis and Testing
Clock

413-08: Information and Message Center
Description and Operation
Information and Message Center
Diagnosis and Testing
Information and Message Center

413-13: Parking Aid
Description and Operation
Parking Aid

Diagnosis and Testing
Parking Aid
Removal and Installation
Parking Aid Module (86.80.39)
Rear Parking Aid Sensor (86.54.14) (86.62.01)
Rear Parking Aid Speaker (86.54.19) (86.62.02)

414: Battery and Charging System

414-00: Battery and Charging System - General Information
Description and Operation
Charging System
Battery Care
Quiescent Drain

414-01: Battery, Mounting and Cables
Description and Operation
Battery and Cables
General Procedures
Battery Connect (86.15.15)
Battery Disconnect and Connect
Removal and Installation
Battery (86.15.01)
Battery Ground Cable (86.15.19)
Battery Positive Cable (86.15.17)
Battery Retaining Bracket (86.15.12)

414-02: Generator and Regulator
Specification
Description and Operation
Generator
Diagnosis and Testing
Generator
Removal and Installation
Generator (86.10.02)

415: Information and Entertainment Systems

415-01: Audio Unit

Description and Operation

Audio System

Diagnosis and Testing

Audio System

Removal and Installation

Audio Unit (86.50.03)

Audio Unit Amplifier (86.50.10) (86.50.36)

Capacitor (86.10.33)

Compact Disc (CD) Changer (86.50.06)

415-02: Antenna

Description and Operation

Antenna

Diagnosis and Testing

Antenna

Removal and Installation

Antenna (86.51.17.60)

Antenna Motor (86.50.21)

415-03: Speakers

Description and Operation

Speakers

Diagnosis and Testing

Speakers

Removal and Installation

Door Speaker (86.50.13)

Instrument Panel Tweeter Speaker (86.51.02)

Instrument Panel Tweeter Speaker Grille (86.51.04)

Quarter Panel Speaker (86.50.12) - 2-Door

Quarter Panel Speaker (86.50.12) - Convertible

Quarter Panel Speaker Grille (76.13.70) - 2-Door

Subwoofer Speaker (86.51.05) - 2-Door

Subwoofer Speaker Grille (76.13.72)

417: Lighting

417-01: Exterior Lighting

- Specification
- Description and Operation
  - Exterior Lighting
- Diagnosis and Testing
  - Exterior Lighting
- General Procedures
  - Headlamp Adjustment (86.40.18) - Vehicles With: High Intensity Discharge Headlamps
  - Headlamp Adjustment (86.40.18) - Vehicles Without: High Intensity Discharge Headlamps
- Removal and Installation
  - Ballast (86.41.52) - Vehicles With: High Intensity Discharge Headlamps
  - Brake Pedal Position (BPP) Switch
  - Fog Lamp Switch (86.65.10)
  - Front Fog Lamp (86.40.96)
  - Front Fog Lamp Bulb (86.40.94)
  - Front Side Marker Lamp (86.40.59)
  - Front Side Marker Lamp Bulb (86.40.58)
  - Front Turn Signal Lamp Bulb (86.40.41)
  - Headlamp Assembly (86.41.33)
  - Headlamp Lens (86.41.39)
  - Headlamp Leveling Module
  - Headlamp Leveling Motor LH (86.42.09) - Vehicles Without: High Intensity Discharge Headlamps
  - Headlamp Leveling Motor LH (86.42.09) - Vehicles With: High Intensity Discharge Headlamps
  - Headlamp Leveling Motor RH (86.42.10) - Vehicles Without: High Intensity Discharge Headlamps
  - Headlamp Leveling Motor RH (86.42.10) - Vehicles With: High Intensity Discharge Headlamps
  - Headlamp Leveling Sensor (86.42.15) - Vehicles With: High Intensity Discharge Headlamps
  - High Beam Headlamp Bulb (86.40.12)
  - High Mounted Stoplamp (86.41.01) (86.41.32) - 2-Door

High Mounted Stoplamp (86.41.01) (86.41.32) - Convertible
License Plate Lamp (86.40.86)
License Plate Lamp Bulb (86.40.85)
Low Beam Headlamp Bulb (86.40.08) - Vehicles Without: High Intensity Discharge Headlamps
Low Beam Headlamp Bulb (86.40.08) - Vehicles With: High Intensity Discharge Headlamps
Rear Lamp Assembly (86.40.70)
Rear Lamp Assembly Bulb (86.40.73)
Rear Side Marker Lamp (86.41.08)
Rear Side Marker Lamp Bulb (86.41.07)
Side Lamp Bulb (86.40.27)
Side Turn Signal Lamp Bulb (86.41.42)
Side Turn Signal Lamp LH (86.40.54)
Side Turn Signal Lamp RH (86.40.53)

417-02: Interior Lighting
Specification
Description and Operation
Interior Lighting
Diagnosis and Testing
Interior Lighting
Removal and Installation
Door Courtesy Lamp (86.40.38)
Door Courtesy Lamp Bulb (86.40.47)
Door Lock Control Switch Bulb (86.46.23)
Footwell Lamp (86.46.20)
Footwell Lamp Bulb (86.46.24)
Front Interior Lamp (86.45.12)
Glove Compartment Lamp (86.45.08)
Glove Compartment Lamp Bulb (86.45.07)
Luggage Compartment Lamp (86.45.16)
Luggage Compartment Lamp Bulb (86.45.15)
Map Reading Lamp Bulb (86.45.09)
Rear Interior Lamp Bulb (86.45.06) - 2-Door
Vanity Mirror Lamp (76.10.50)
Vanity Mirror Lamp Bulb (86.45.95)

417-04: Daytime Running Lamps (DRL)
Description and Operation
Daytime Running Lamps (DRL)
Diagnosis and Testing
Daytime Running Lamps (DRL)

418: Electrical Distribution

418-00: Module Communications Network
Description and Operation
Communications Network
Diagnosis and Testing
Communications Network
Removal and Installation
Auxiliary Junction Box (AJB) (86.70.55)
Battery Junction Box (BJB) (86.70.69)
Central Junction Box (CJB) LH (86.70.57)
Central Junction Box (CJB) RH (86.70.56)

418-02: Wiring Harnesses
Description and Operation
Wiring Harness
General Procedures
Wiring Harness Repair

419: Electronic Feature Group

419-01A: Anti-Theft - Active
Description and Operation
Anti-Theft - Active
Diagnosis and Testing
Anti-Theft - Active
Removal and Installation
Anti-Theft Alarm Siren
Inclination Sensor (86.77.06)

419-01B: Anti-Theft - Passive

Description and Operation

Anti-Theft - Passive

Diagnosis and Testing

Anti-Theft - Passive

Removal and Installation

Passive Anti-Theft System (PATS) Module

Passive Anti-Theft System (PATS) Transceiver (86.52.30)

419-07: Navigation System

Description and Operation

Navigation System

Diagnosis and Testing

Navigation System

Removal and Installation

Navigation System Antenna (86.62.06)

Navigation System Compact Disc (CD) Unit (86.62.05)

Navigation System Display Module (86.62.07)

419-08: Cellular Phone

Description and Operation

Cellular Phone

Diagnosis and Testing

Cellular Phone

Cellular Phone - Vehicles With: Bluetooth

Removal and Installation

Bluetooth Module

Cellular Phone Antenna (86.51.17)

Transceiver Module

419-10: Multifunction Electronic Modules

Removal and Installation

Anti-Theft Alarm and Double Locking Module

Driver Door Module (DDM) (86.80.29)

Driver Seat Module (DSM) (86.75.28)

Multifunction Electronic Module (86.80.31)

Passenger Door Module (PDM) (86.80.30)

Passenger Seat Module (PSM) (86.75.16)

5: Body and Paint

501: Body and Paint

501-00: Body System - General Information
Description and Operation
Body

501-02: Front End Body Panels
Specification
Description and Operation
Front End Body Panels
Removal and Installation
Bulb Access Panel (76.10.91)
Cowl Panel Grille (76.10.01) (76.43.39)
Cowl Vent Screen (76.10.01)
Fender Splash Shield (76.10.90)
Radiator Grille Opening Cross Brace (76.10.03) - Convertible
Radiator Grille Opening Panel (76.10.06)
Radiator Splash Shield (76.22.90)

501-03: Body Closures
Description and Operation
Body Closures
General Procedures
Luggage Compartment Lid Alignment (76.19.03)
Removal and Installation
Door Opening Lower Weatherstrip (76.40.30) - 2-Door
Door Opening Upper Weatherstrip (76.40.01)
Fuel Filler Door (76.10.25)
Hood (76.16.01)
Hood Insulation (76.16.06)
Hood Strut (76.16.15)
Luggage Compartment Lid (76.19.01)

Luggage Compartment Lid Opening Weatherstrip (76.19.06)
Luggage Compartment Lid Strut (76.19.27)

501-05: Interior Trim and Ornamentation

Specification
Description and Operation
Interior Trim
Removal and Installation
A-Pillar Trim Panel (76.13.31)
Coat Hanger (76.10.54)
Cowl Side Trim Panel (76.13.30)
Door Trim Panel (76.34.01)
Driver Side Floor Covering (76.49.09)
Headliner (76.64.01)
Luggage Compartment Front Trim Panel (76.19.31)
Luggage Compartment Rear Trim Panel (76.19.44)
Luggage Compartment Side Trim Panel (76.19.22)
Parcel Shelf (76.67.06) - 2-Door
Passenger Air Bag Module Finish Panel (76.47.40)
Passenger Side Floor Covering (76.49.10)
Rear Quarter Panel Armrest (76.13.66) - Vehicles Without: Convertible Top
Rear Quarter Panel Armrest and Speaker Grille (76.13.71) - 2-Door
Rear Quarter Upper Trim Panel - Convertible
Scuff Plate Trim Panel (76.13.81)
Sun Visor (76.10.48)
Sun Visor Retaining Clip (76.10.58)
Door Window Control Switch Finish Panel (76.47.33)

501-08: Exterior Trim and Ornamentation

Description and Operation
Exterior Trim
Removal and Installation
Door Moulding (76.43.72)
Door Window Moulding (76.43.04)
Front Fender Moulding (76.10.48) (76.43.73)
Hood Grille (76.16.37)
License Plate Housing (76.43.22)

Luggage Compartment Lid Moulding (76.43.79)
Radiator Grille (76.55.03)
Rear Quarter Window Moulding (76.43.81)
Rear Window Moulding (76.43.46) - 2-Door
Rocker Panel Moulding (76.11.36)
Roof Moulding (76.43.11) (76.43.68) - 2-Door

501-09: Rear View Mirrors
Specification
Description and Operation
Rear View Mirrors
Diagnosis and Testing
Rear View Mirrors
Removal and Installation
Auto-Dimming Interior Mirror (76.10.56)
Exterior Mirror (76.10.52)
Exterior Mirror Cover (76.10.55)
Exterior Mirror Glass (76.10.53)
Exterior Mirror Motor (76.10.57) (76.11.09)

501-10: Seating
Specification
Description and Operation
Seats
Diagnosis and Testing
Seats
Removal and Installation
Front Seat (76.70.01)
Front Seat Backrest Cover (76.70.15) - Vehicles Without: Recaro Seats
Front Seat Backrest Cover (76.70.15) - Vehicles With: Recaro Seats
Front Seat Backrest Heater Mat (86.75.14) - Vehicles Without: Recaro Seats
Front Seat Backrest Heater Mat (86.75.14) - Vehicles With: Recaro Seats
Front Seat Cushion Cover (76.70.33) - Vehicles Without: Recaro Seats
Front Seat Cushion Cover (76.70.33) - Vehicles With: Recaro Seats
Front Seat Cushion Heater Mat (86.75.13) - Vehicles Without: Recaro Seats
Front Seat Cushion Heater Mat (86.75.13) - Vehicles With: Recaro Seats
Front Seat Head Restraint Module (76.70.66) - Vehicles Without: Recaro Seats

Front Seat Height Adjustment Motor (86.75.29)
Front Seat Recliner Motor (86.75.04) - Vehicles Without: Recaro Seats
Front Seat Recliner Motor (86.75.04) - Vehicles With: Recaro Seats
Front Seat Track Motor (86.75.33)
Lumbar Motor (86.75.12) - Vehicles Without: Recaro Seats
Lumbar Motor (86.75.12) - Vehicles With: Recaro Seats
Rear Seat Backrest (76.70.38)
Rear Seat Cushion (76.70.37)
Seat Control Switch (86.75.23)

501-11: Glass, Frames and Mechanisms
Description and Operation
Glass, Frames and Mechanisms
General Procedures
Door Window Glass Adjustment (76.31.03)
Removal and Installation
Automatic Window Control Switch (86.65.97)
Door Window Glass (76.31.01)
Door Window Glass Weatherstrip (76.31.55)
Door Window Glass Weatherstrip (76.31.55) - Convertible
Door Window Regulator Motor (86.25.57)
Driver Door Window Control Switch (86.25.03) (86.25.08)
Passenger Door Window Control Switch (86.25.06)
Rear Quarter Window Glass (76.31.31)
Rear Quarter Window Glass Weatherstrip (76.40.33) - Convertible
Rear Quarter Window Glass Lower Weatherstrip (76.40.32)
Rear Quarter Window Glass Upper Weatherstrip (76.40.31)
Rear Quarter Window Regulator Motor (86.25.11) - Convertible
Rear Window Glass (76.81.11) - 2-Door
Rear Window Glass (76.81.11) - Convertible
Windshield Glass (76.81.40)
Windshield Moulding (76.43.40) (76.43.41)

501-12: Instrument Panel and Console
Specification
Description and Operation
Instrument Panel and Instrument Panel Console

Removal and Installation
- Audio Unit Housing (76.25.15)
- Floor Console (76.25.01)
- Floor Console Ashtray (76.25.25)
- Floor Console Finish Panel (76.47.26)
- Floor Console Stowage Compartment (76.25.16)
- Floor Console Stowage Compartment Lid (76.25.18)
- Glove Compartment (76.52.03)
- Glove Compartment Lid (76.52.02)
- Instrument Cluster Finish Panel (76.47.24)
- Instrument Panel (76.46.01)
- Instrument Panel Finish Panel (76.47.06)
- Instrument Panel Lower Trim Panel (76.46.11)
- Overhead Console (76.13.69)
- Rear Cup Holder (76.25.27)
- Steering Column Lower Shroud (76.46.03)

501-14: Handles, Locks, Latches and Entry Systems

Description and Operation
- Handles, Locks, Latches and Entry Systems

Removal and Installation
- Door Ajar Switch (86.65.98)
- Door Ajar Warning Indicator Switch (86.65.96)
- Door Latch (76.37.12)
- Door Latch Cable (76.37.67)
- Door Lock Actuator (86.65.16)
- Door Lock Control Switch (86.80.32)
- Door Lock Cylinder (76.37.71)
- Exterior Driver Door Handle (76.58.07)
- Exterior Passenger Door Handle (76.58.08)
- Glove Compartment Lid Lock Cylinder (76.52.23)
- Hood Ajar Switch (86.65.99)
- Ignition Lock Cylinder (57.40.29)
- Luggage Compartment Lid and Fuel Filler Door Release Switch (86.65.95)
- Luggage Compartment Lid Latch (76.19.25)
- Luggage Compartment Lid Latch Actuator (76.19.25)
- Luggage Compartment Lid Lock Cylinder (76.19.19)

Luggage Compartment Lid Warning Indicator Switch (86.65.93)

501-16: Wipers and Washers
Specification
Description and Operation
Wipers and Washers
Removal and Installation
Headlamp Washer Jet (84.20.08)
Rain Sensor (84.12.10) (86.56.62)
Rain Sensor Module (86.56.60)
Windshield Washer Pump and Headlamp Washer Pump (84.10.21)
Windshield Washer Reservoir (84.10.01) (84.10.03)
Windshield Wiper Motor (84.15.13)
Wiper Pivot Arm (84.15.03)

501-18: Convertible Top
Description and Operation
Convertible Top
Removal and Installation
Convertible Top Assembly (76.86.15)
Convertible Top Headliner (76.86.16)
Convertible Top Hydraulic Lift Cylinder (76.86.17)
Convertible Top Hydraulic Lift Cylinder Hoses (76.86.24)
Convertible Top Hydraulic Pump (76.86.06)
Convertible Top Latch (76.86.19)
Convertible Top Latch Hydraulic Cylinder (76.86.21)
Convertible Top Latch Hydraulic Cylinder Hoses (76.86.22)
Convertible Top Material (76.86.12)
Header Rail Lower Trim Panel (76.64.16.70)
Header Rail Upper Trim Panel (76.86.20)
Header Rail Weatherstrip

501-19: Bumpers
Specification
Description and Operation
Bumpers
Removal and Installation

Front Bumper (76.22.08)
Front Bumper Cover (76.22.78)
Front Bumper Isolator (76.22.31)
Rear Bumper (76.22.27) (76.22.52)
Rear Bumper Cover (76.22.74) (76.22.77)
Rear Bumper Isolator (76.22.70)

501-20A: Safety Belt System

Specification
Description and Operation
Safety Belt System
Diagnosis and Testing
Safety Belt System
Removal and Installation
Front Safety Belt (76.73.21)
Front Safety Belt Buckle (76.73.49)
Rear Safety Belt Retractor (76.73.18) - 2-Door
Rear Safety Belt Retractor (76.73.18) – Convertible

501-20B: Supplemental Restraint System

Specification
Description and Operation
Air Bag Supplemental Restraint System (SRS)
Diagnosis and Testing
Air Bag Supplemental Restraint System (SRS)
Removal and Installation
Air Bag Control Module (76.73.41)
Crash Sensor (76.73.55)
Driver Air Bag Module (76.73.39)
Front Passenger Seat Occupant Classification Sensor (76.73.60) – Vehicles Without: Recaro Seats
Front Passenger Seat Occupant Classification Sensor (76.73.60) - Vehicles With: Recaro Seats
Front Passenger Seat Occupant Position Sensor (76.73.57)
Passenger Air Bag Deactivation (PAD) Indicator (76.73.58)
Passenger Air Bag Module (76.73.37)
Restraints Control Module (RCM) (76.73.48)

Seat Position Sensor (76.73.62)
Side Air Bag Module (76.73.47) - Vehicles Without: Recaro Seats
Side Air Bag Module (76.73.47) - Vehicles With: Recaro Seats
Side Impact Sensor (76.73.53)

501-25: Body Repairs - General Information

Description and Operation

Body Repairs

502: Frame and Mounting

502-00: Uni-Body, Subframe and Mounting System

Removal and Installation

Front Axle Crossmember
Front Axle Crossmember Front Bushing (60.35.24)
Front Axle Crossmember Rear Bushing (60.35.26)
Rear Axle Crossmember (64.25.16)
Rear Axle Crossmember Bushing (64.25.02)

General Information - General Service Information

Description and Operation

Safety Notice

Appropriate service methods and proper repair procedures are essential for the safe, reliable operation of all motor vehicles, as well as the safety of the person doing the work. This manual provides general directions for accomplishing service and repair work with tested, effective, techniques. Following them will help assure reliability.

There are numerous variations in procedures, techniques, tools, and parts for servicing vehicles, as well as in the skill of the person doing the work. This manual cannot possibly anticipate all such variations and provide advice or cautions as to each. Accordingly, anyone who departs from the instructions provided in the manual must first establish that neither personal safety nor vehicle integrity is compromised from choices of methods, tools or parts.

Notes, Cautions and Warnings

Throughout this manual, important information is highlighted by the use of notes, cautions and warnings. NOTES give additional information on a topic or procedure, CAUTIONS are given to prevent damage to the vehicle, and WARNINGS are given to prevent personal injury.

Copyright Statement

Copyright.© Jaguar Cars Ltd. 1997.

All rights reserved. No part of this publication may be reproduced, stored in a retrieval system, or transmitted in any form, electronic, mechanical, photocopying, recording or other means, without prior written permission of Jaguar Cars Ltd., Service Department, Browns Lane, Coventry, CV5 9DR, England.

Workshop Manual Organization

This manual incorporates descriptive, diagnostic, and repair information to help trained Jaguar technicians complete service and rectification procedures. The information can be accessed by choosing the appropriate five digit section number. For example, Section 412-03 covers air conditioning, which is part of the Climate Control System.

The manual is organized into six groups covering generic aspects of the vehicle systems; the first digit of the section number represents a group selected from the following:

1. General Information.

2. Chassis.

3. Powertrain.

4. Electrical.

5. Body and Paint.

6. Routine Maintenance.

Each of the six groups comprises sections relating to specific areas of the vehicle.

The second and third digits of the section number indicate the vehicle system.

The last two digits of the section number define the system covered, more specifically.

Each section comprises one or more of the following sub-sections:

Specification

- General specifications (including setting-up information, capacities, lubricants, fluids, sealants and adhesives).
- Torque specifications.

Description and Operation

- A general illustration and parts list to identify the components which comprise a particular system or assembly.
- A brief description of the system operating characteristics or description of the assembly.
- A description of each component and its function.

Diagnosis and Testing

- Descriptions of how to identify system problems.
- Inspection and verification information.
- Symptom charts comprising fault conditions, possible sources and actions.

General Procedures

- General maintenance procedures, including adjustment, alignment, bleeding and filling, with illustrated steps and supporting text.
- Tightening torque specifications, shown in the illustrations.

Removal and Installation

- Component removal and installation maintenance procedures, with illustrated steps and supporting text.
- Tightening torque specifications, shown in the illustrations.
- An illustrated tool chart for each procedure requiring the use of special tools.

Disassembly and Assembly

- Component disassembly and assembly maintenance procedures, with illustrated steps and supporting text.
- Tightening torque specifications, shown in the illustrations.
- An illustrated tool chart for each procedure requiring the use of special tools.

Repairs and Replacements

When service parts are required, it is essential that only genuine Jaguar/Daimler replacements are used.

Attention is drawn to the following points concerning repairs and the fitting of replacement parts and accessories:

- Safety features embodied in the vehicle may be impaired if other than genuine parts are fitted. In certain territories, legislation prohibits the fitting of parts which are not produced to the vehicle manufacturer's specification.
- Torque wrench setting figures given in this manual must be strictly adhered to. Locking devices, where specified, must be fitted. If the efficiency of a locking device is impaired during removal it must be renewed.
- Owners purchasing accessories while travelling abroad should ensure that the accessory and its fitted location on the vehicle conform to mandatory requirements existing in their country of origin.
- The vehicle warranty may be invalidated by the fitting of other than genuine Jaguar/Daimler parts. All Jaguar/Daimler replacements have the full backing of the factory warranty.
- Jaguar/Daimler dealers are obliged to supply only genuine service parts.

Thread Locking Devices

Patched Fasteners

Two types of patched fastener are essentially used on certain suspension, steering and other critical components, where operational movement of the component necessitates positive thread locking. Standard patched fasteners have part numbers bearing the suffix letter M. For identification of special patched fasteners, refer to the list of patched fasteners below, or the relevant component drawings.

Jaguar Specification JFS 02.01.02 patched fasteners incorporate a micro-encapsulated adhesive which is released into the mating threads during tightening. Following final tightening, the adhesive in this type of patched fastener must be allowed a period to cure before the component/vehicle is used. On removal, this type of fastener must be discarded and a new patched fastener of the same specification fitted. All mating threads must be thoroughly cleaned prior to fitting of the new fastener.

Jaguar Specification JFS 02.01.04 patched fasteners incorporate a plastic/polyester on the thread. Acting as a wedge between the mating threads, this compound imposes a prevailing torque during tightening. Whilst this type of patched fastener can be re-used, the imposed torque diminishes. It is therefore recommended that following third removal, this type of patched fastener is discarded and a new fastener of the same specification is fitted.

Special fasteners bearing the following part numbers are of the micro-encapsulated adhesive type and following removal, must be discarded and replaced by new items of the same specification:

CAC 8223

JZB 10060; JZB 10061; JZB 10078.

JZH 100027.

JZS 100082; JZS100087; JZS 100088; JZS 100089; JZS 100090; JZS 100118; JZS 100157; JZS 100164; JZS 100166.

NCA 1451 AA.

Vehicle Specifications

Purchasers are advised that the specification details set out in this manual apply to a range of vehicles and not to any specific one. For the specification of a particular vehicle, purchasers should consult their dealer.

The Manufacturer reserves the right to vary the specifications, with or without notice, and at such times and in such manner as the Manufacturer thinks fit. Major as well as minor changes may be involved, in accordance with the Manufacturer's policy of continuous improvement.

Whilst every effort is made to ensure the accuracy of the particulars contained in this manual, neither the Manufacturer nor the Dealer, by whom the manual is supplied, shall in any circumstances be held liable for any inaccuracy or the consequences thereof.

Service Repair Operation Numbering

A master index of numbered operations has been compiled for universal application to all vehicles manufactured by Jaguar Cars Ltd.

Each operation is allocated a number from the master index and cross-refers with an identical number in the Repair Operation Times schedule. The number consists of six digits arranged in three pairs.

Each maintenance procedure in this manual is described in the sequence necessary to complete the operation in the minimum time, as specified in the Repair Operation Times schedule for this range of vehicles.

References to Left- and Right-Hand

References to the left- or right-hand side of the vehicle are made as if viewing from the driver's seat.

References to Engine Banks

With the engine installed in the vehicle, the right-hand cylinder bank is designated Bank A, and the left-hand cylinder bank is designated Bank B.

Special Tools

Any special tools and equipment required to perform a maintenance procedure, are shown at the beginning of each maintenance procedure.

Torque Specifications

Torque specifications are shown in maintenance procedure illustrations and also in the torque specifications chart located at the front of the relevant section.

Disconnecting/Connecting the Battery

Owing to the electronic components used on the vehicle, it is important that the battery is disconnected when specified in a maintenance procedure.

When the battery is connected, the specified procedure must be followed, to ensure the correct operation of all vehicle systems; refer to

Use of Control Modules

Control modules may only be used on the vehicle to which they were originally fitted. Do not attempt to use or test a control module on any other vehicle.

Functional Test

On completion of a maintenance procedure, a thorough test should be carried out, to ensure that the relevant vehicle systems are working correctly.

Protecting the Vehicle

Always fit covers to protect the fenders before commencing work in the engine compartment. Cover the seats and carpets, wear clean overalls and wash hands or wear gloves before working inside the vehicle. Avoid spilling hydraulic fluid, antifreeze or battery acid on the paintwork. In the event of spillage, wash off with water immediately. Use polythene sheets in the trunk to protect carpets. Always use the recommended service tool, or a satisfactory equivalent, where specified. Protect temporarily exposed screw threads by replacing nuts or fitting caps.

Preparation

Before disassembly, clean the surrounding area as thoroughly as possible. When components have been removed, blank off any exposed openings using grease-proof paper and masking tape. Immediately seal fuel, oil and hydraulic lines when separated, using plastic caps or plugs, to prevent loss of fluid and the entry of dirt. Close the open ends of oilways, exposed by component removal, with tapered hardwood plugs or readily visible plastic plugs. Immediately a component is removed, place it in a suitable container; use a separate container for each component and its associated parts. Before dismantling a component, clean it thoroughly with a recommended cleaning agent; check that the agent will not damage any of the materials within the component. Clean the bench and obtain marking materials, labels, containers and locking wire before dismantling a component.

Dismantling

Observe scrupulous cleanliness when dismantling components, particularly when parts of the brake, fuel or hydraulic systems are being worked on. A particle of dirt or a fragment of cloth could cause a dangerous malfunction if trapped in these systems. Clean all tapped holes, crevices, oilways and fluid passages with compressed air. Do not permit compressed air to enter an open wound. Always use eye protection when using compressed air.

Ensure that any O-rings used for sealing are correctly refitted or renewed if disturbed. Mark mating parts to ensure that they are replaced as dismantled. Whenever possible use marking materials which avoid the possibilities of causing distortion or the initiation of cracks, which could occur if a center punch or scriber were used. Wire together mating parts where necessary to prevent accidental interchange (e.g roller bearing components). Tie labels on to all parts to be renewed and to parts requiring further inspection before being passed for reassembly. Place labelled parts and other parts for rebuild in separate containers. Do not discard a part which is due for renewal until it has been compared with the new part, to ensure that the correct part has been obtained.

Inspection

Before inspecting a component for wear or performing a dimensional check, ensure that it is absolutely clean; a slight smear of grease can conceal an incipient failure. When a component is to be checked dimensionally against figures quoted for it, use the correct equipment (surface plates, micrometers, dial gauges etc.) in serviceable condition. The use of makeshift equipment can be dangerous. Reject a component if its dimensions are outside the limits quoted, or if damage is apparent. A part may be refitted if its critical dimension is exactly to the limit size and it is otherwise satisfactory. Use Plastigauge 12 Type PG-1 for checking bearing surface clearance, e.g. big end bearing shell to crank journal. Instructions for the use of Plastigauge and a scale giving bearing clearances in steps of 0.0025 mm (0.0001 in) are supplied with the package.

Safety Precautions

• WARNINGS:

WORKING ON THE FUEL SYSTEM RESULTS IN FUEL AND FUEL VAPOUR BEING PRESENT IN THE ATMOSPHERE. FUEL VAPOUR IS EXTREMELY FLAMMABLE, HENCE GREAT CARE MUST BE TAKEN WHILST WORKING ON THE FUEL SYSTEM. ADHERE STRICTLY TO THE FOLLOWING PRECAUTIONS:

- DO NOT SMOKE IN THE WORK AREA.
- DISPLAY 'NO SMOKING' SIGNS AROUND THE AREA.
- DISCONNECT THE BATTERY BEFORE WORKING ON THE FUEL SYSTEM.
- DO NOT CONNECT/DISCONNECT ELECTRICAL CIRCUITS, USE ELECTRICAL EQUIPMENT OR OTHER TOOLS OR ENGAGE IN WORKING PRACTICES WHICH IN ANY WAY MAY RESULT IN THE PRODUCTION OF SPARKS.
- ENSURE THAT A CO2 FIRE EXTINGUISHER IS CLOSE AT HAND.
- ENSURE THAT DRY SAND IS AVAILABLE TO SOAK UP ANY FUEL SPILLAGE.
- EMPTY FUEL USING SUITABLE FIRE PROOF EQUIPMENT INTO AN AUTHORIZED EXPLOSION PROOF CONTAINER.
- DO NOT EMPTY FUEL WHILE WORKING IN A WORKSHOP OR A PIT.
- ENSURE THAT WORKING AREA IS WELL VENTILATED.
- ENSURE THAT ANY WORK ON THE FUEL SYSTEM IS ONLY CARRIED OUT BY EXPERIENCED AND WELL QUALIFIED MAINTENANCE PERSONNEL.
- ENSURE THAT FUME EXTRACTION EQUIPMENT IS USED WHERE APPROPRIATE.

FUME EXTRACTION EQUIPMENT MUST BE IN OPERATION WHEN SOLVENTS ARE USED E.G. TRICHLOROETHANE, WHITE SPIRIT, SBP3, METHYLENE CHLORIDE, PERCHLORETHYLENE. DO NOT SMOKE IN THE VICINITY OF VOLATILE DEGREASING AGENTS.

General workshop practices:

- Disconnect the grounded terminal of the vehicle battery.
- Do not apply heat in an attempt to free seized nuts or fittings; as well as causing damage to protective coatings, there is a risk of damage from stray heat to electronic equipment and brake lines.
- Keep oils and solvents away from naked flames and other sources of ignition.
- Adhere strictly to handling and safety instructions given on containers and labels.
- Ensure that a suitable form of fire extinguisher is conveniently located.
- When using electrical tools and equipment, inspect the power lead for damage and check that it is properly earthed.
- Do not leave tools, equipment, spilt oil etc. around the work area.

Working beneath a vehicle:

- Whenever possible, use a ramp or pit in preference to jacking.
- Position chocks at the wheels as well as applying the parking brake.
- Never rely on a jack alone to support a vehicle; use axle stands, or blocks carefully placed at the jacking points, to provide a rigid location.
- Check that any lifting equipment used has adequate capacity and is fully serviceable.

Working on air conditioning systems:

- Do not disconnect any pipes of the refrigeration system unless you are trained and instructed to do so; a refrigerant is used which can cause blindness if allowed to come into contact with the eyes.

Health Protection

Prolonged and repeated contact with mineral oil will result in the removal of natural oils from the skin, leading to dryness, irritation and dermatitis. In addition, used engine oil contains potentially harmful contaminants which may cause skin cancer. Washing facilities and adequate means of skin protection should be provided.

Observe these recommendations:

- Wear protective clothing and impervious gloves when necessary.
- Do not put oily rags in pockets. Avoid contaminating clothes, particularly underwear, with oil.
- Overalls must be cleaned regularly; discard oil impregnated clothing and footwear which cannot be washed or cleaned.
- First Aid treatment should be obtained immediately for open cuts or wounds.
- Use barrier creams, applying before each work period, to enable easier removal of dirty oil and grease from the skin.
- Wash with soap and water to ensure that all oil is removed (skin cleaner and a nail brush will help). The use of preparations containing lanolin will help to replace the natural skin oils which have been removed.
- Do not use petrol, kerosene, gas oil, thinners or solvents for washing skin.
- If skin disorders develop, obtain medical advice immediately.
- Where practicable, degrease components prior to handling.
- Where there is a risk of fluids coming into contact with the eyes, suitable eye protection should be worn - goggles or face shield. An eye wash facility should be provided.
- Ensure that adequate ventilation is provided when volatile degreasing agents are being used.

Environmental Protection

In some countries it is illegal to pour used oil onto the ground, down sewers or drains, or into water courses. The burning of used engine oil in small space heaters or boilers is not recommended unless emission control equipment is fitted. Dispose of used oil through authorized waste disposal contractors, to licensed waste disposal sites or to the waste oil reclamation trade. If in doubt, contact the Local Authority for advice on disposal facilities.

On-Board Diagnostics (OBD)

Vehicles use programmed electronic control systems to provide engine management and emission regulation, automatic transmission operation and anti-lock braking control. These control systems have an integral On-Board Diagnostics (OBD) facility for use in conjunction with either Jaguar diagnostic equipment or a scan tool which is capable of retrieving DTCs, PIDs and performing active commands.

The OBD information in this manual provides diagnostic and rectification procedures for emission related electrical and mechanical systems. The information is intended to facilitate fault diagnosis and the subsequent rectification of vehicles without recourse to the portable diagnostic unit (PDU).

OBD related information can be found in the following sections:

- General Information
- Engine Management System
- Automatic Transmission
- Anti-lock Braking System

Where appropriate a section comprises the following sub-sections:

Description and Operation

- A general illustration and parts list to help the identification of the particular system or component.
- A brief description of the system operating characteristics and monitoring procedure accompanied by a component illustration.
- Additional information, where appropriate, is provided in the form of component calibrations, characteristics and cross sectional views.
- A localized circuit diagram is included to provide circuit identification and details of connectors, splices, fuses, wire gauge and colors. See Circuit Diagrams.

Diagnosis and Testing (dedicated to fault analysis and rectification)

- Recommended special tools.
- Symptom chart; a chart containing all relevant Diagnostic Trouble Codes (DTC), their possible causes and an indication of the appropriate test.
- Specific pinpoint test(s), designed so that fault diagnosis can be carried out in a logical and efficient manner.

• NOTE: For convenience, pinpoint test illustrations indicating voltage measurements do not always accurately reflect the conventional method of connecting a multimeter. More explicitly, if the multimeter probes are connected as shown in some illustrations (positive probe to ground), the voltage reading would be preceded by the negative sign '-', indicating that the probes have been connected in the reverse manner to the normal convention. The accuracy of the reading is not affected and the '-' sign can be ignored when comparing the reading with the results indicated in the text of the pinpoint test.

Removal and Installation

- Removal procedure(s), formatted in the recommended sequence
- Illustrated guide to the use of special tools
- Illustrations to support the relevant text
- Installation procedure as above and including special recommendations for processes, lubricants and tightening torques.

Circuit Diagrams

To understand the relationship between the vehicle electrical system and the system circuit diagrams, refer to the appropriate Electrical Guide.

Fault Identification (DTC)

The diagnostic trouble codes (DTCs) are listed in Section 303-00 under Diagnostic Trouble Codes and include, where applicable, the corresponding manual section reference.

Published: 11-May-2011

General Information - Terminology Glossary

Description and Operation

This glossary of terms is intended to cover emissions-related (to SAE J 1930) terminology, and other abbreviations that may be used in this manual.

The required term may be looked-up in the left-hand column, and subsequent columns give the standard acronym, unit or abbreviation, and definition.

Term(s)	Acronym / Unit / Abbreviation	Definition
A		
Accelerator Pedal	AP	
After Bottom Dead Center	ABDC	Event occurring after BDC
After Top Dead Center	ATDC	Event occurring after TDC
Airbag / Supplementary Restraint System	Airbag, SRS	Airbag restraint system for driver and front seat passenger
Air Cleaner	ACL	
Air Conditioning	A/C	
Air Conditioning Control Module	A/CCM	Module controlling air conditioning, heating and ventilation
Air Conditioning Signal	ACS	Air conditioning compressor clutch operation is signalled to the ECM which induces idle speed corrections to compensate for engine load changes
Alternating current	ac	
Air Fuel Ratio	AFR	Nominally 14.7 parts air to one part fuel
Ampere	A	SI unit of current
Ampere hour	Ah	A current of one ampere flowing for one hour
Anti-Lock Braking System	ABS	System which prevents wheel lock-up under braking by sensing lack of rotation of a wheel(s) and diverting fluid pressure away from it (them)
ABS Control Module	ABS CM	
ABS / Traction Control Control Module	ABS / TC CM	
Atmosphere	atm	Unit of pressure (1.01325 bar)
Automatic Stability Control	ASC	A form of vehicle control in which the ECM reduces engine torque to control wheel-spin
B		
Barometric Absolute Pressure Sensor	BARO	Sensor measuring the pressure of surrounding air at any given temperature and altitude
Battery positive voltage	B+	The positive voltage from a battery or any circuit connected directly to it
Before Bottom Dead Center	BBDC	Event occurring before BDC
Before Top Dead Center	BTDC	Event (usually ignition) occurring before TDC
Blower	BLR	Device which supplies a current of air at moderate pressure, e.g. heater or A/C blower
Body Processor Module	BPM	Control module for body electrical systems, e.g. interior lamps, windshield wash / wipe control
Bottom Dead Center	BDC	Lowest point of piston travel in a reciprocating engine
Brake horsepower	bhp	Effective horsepower developed by an engine or motor, as measured by a brake applied to its output shaft
Brake Mean Effective Pressure	BMEP	That part of the effective pressure developed in a cylinder that would result in a cylinder output equal to the bhp of the engine
Brake On/Off	BOO	Indicates the position of the brake pedal
British Standard	BS	Standard specification issued by the British Standards Institution
British Standard Automotive	BSAu	
Bus		Topology of a communication network
Bypass Air	BPA	Mechanical control of throttle bypass air
C		
Camshaft Position Sensor	CMPS	Indicates camshaft position
Canadian Motor Vehicle Safety Standard	CMVSS	
Canister Purge	CANP	Controls purging of the EVAP canister
Carbon dioxide	CO2	Colorless gas with a density of approximately 1.5 times that of air
Carbon monoxide	CO	Poisonous gas produced as the result of incomplete combustion
Case Ground	CSE GND	Control module casing ground
Catalytic converter		In-line exhaust system device used to reduce the level of engine exhaust emissions
Celsius	C	SI term for the Centigrade scale, with freezing point at zero and boiling point at 100°
Central Processor Unit	CPU	The section of a computer that contains the arithmetic, logic and control circuits. It performs arithmetic operations, controls instruction processing, and provides timing signals and other housekeeping operations
Closed Loop	CL	
Closed Loop System	CLS	Control system with one or more feedback loops
Column/Mirror Control Module	C/MCM	
Control Module	CM	A self-contained group of electrical/electronic components, designed as a single replaceable unit, and controlling one or more processes
Controller Area Network	CAN	A communication system which allows control modules to be linked together in a network.
Crankshaft Position Sensor	CKPS	Generates crankshaft position information in conjunction with the CKPTR (also generates speed information in certain applications)
Crankshaft Position Timing Ring	CKPTR	Toothed ring which triggers the CKPS
Crankcase Ventilation System	CV	System which scavenges camshaft cover and crankcase emissions and feeds them into the inlet manifold
Cubic centimeter	cm3	
Curb weight		Weight of vehicle with fuel, lubricants and coolant, but excluding driver, passengers or payload
D		

Term(s)	Acronym / Unit / Abbreviation	Definition
Data Link Connector	DLC	Connector providing access and/or control of the vehicle information, operating conditions, and diagnostic information
Degree	deg, °	Angle or temperature
Department of Transportation (US)	DOT	
Department of Transport (UK)	DTp	
Deutsche Institut für Normung	DIN	German standards regulation body
Diagnostic Module	DM	Supplemental Restraint System (non-controlling) module for diagnostics overview
Diagnostic Test Mode	DTM	A level of capability in an OBD system. May include different functional states to observe signals, a base level to read DTCs, a monitor level which includes information on signal levels, bi-directional control with on/off board aids, and the ability to interface with remote diagnosis
Diagnostic Trouble Code	DTC	An alpha/numeric identifier for a fault condition identified by the On-Board Diagnostic (OBD) system
Dial test indicator	DTI	A mechanical measuring instrument, with a rotary indicating pointer connected to a linear operating probe
Differential pressure		Pressure difference between two regions e.g. between intake manifold and atmospheric pressures
Differential Pressure Feedback EGR	DPFE	An EGR system that monitors differential EGR pressure across a remote orifice to control EGR flow
Direct current	dc	Current which flows in one direction only, though it may have appreciable pulsations in its magnitude
Dual linear switch	DLS	J-gate switch connected to the TCM on SC vehicles
E		
EGR Temperature EGRT Sensor	EGRT	Sensing EGR function based on temperature change
EGR Vacuum Regulator	EVR	Controls EGR flow by changing vacuum to the EGR valve
EGR Valve Position	EVP	An EGR system that directly monitors EGR valve position to control EGR flow
Electrically Erasable Programmable Read-Only Memory	EEPROM	
Electrically Programmable Read-Only memory	EPROM	
Electronic Secondary Air Injection	EAIR	A pump-driven system for providing secondary air using an electric air pump
Engine Control Module	ECM	
End of dash	EOD	Referring to a vehicle fascia, eg EOD air vent
Engine Coolant Level	ECL	
Engine Coolant Temperature	ECT	
ECT Sensor	ECTS	Thermistor which provides engine coolant temperature signal to the ECM to trigger enrichment circuits which increase injector 'on' time for cold start and warm-up
Engine speed	RPM	
Environmental Protection Agency	EPA	
Evaporative Emission	EVAP	System designed to prevent fuel vapor from escaping into the atmosphere. Typically includes a charcoal filled canister to absorb fuel vapor
Evaporative Emission Control Valve	EVAPP	
Exhaust Gas Recirculation	EGR	System which reduces NOx emissions by adding exhaust gases to the incoming fuel/air charge
Exhaust Gas Recirculation Solenoid Vacuum Valve	EGRS	
Exhaust Gas Recirculation Temperature Sensor	EGRT Sensor	
Exhaust Gas Recirculation Valve	EGRV	
F		
Fan Control	FC	Engine cooling fan control
Federal Motor Vehicle Safety Standard (US)	FMVSS	
Figure	Fig.	Illustration reference
Flash Electrically Erasable Programmable Read-Only Memory	FEEPROM	
Flash Erasable Programmable Read-Only Memory	FEPROM	
Flywheel Sensor	CKFS	Sensor mounted so as to be triggered by each flywheel ring gear tooth to give an engine speed signal
Fuel Injectors	FI	Solenoid operated devices that spray a metered quantity of fuel into the inlet ports
Fuel Pressure Regulator Control	FPRC	Controls fuel pressure regulator; used primarily to give extra fuel at cold start-up
Fuel Pump	FP	
Fuel Pump Monitor	FPM	Monitors operation of fuel pump
Fuel Pump Relay	FPR	
Fuel rich/lean		Qualitative evaluation of air/fuel ratio based on a ratio known as stoichiometry, or 14.7:1 (Lambda)
Full Scale Deflection	FSD	The maximum indication point on an analogue meter or gauge
G		
Generator	GEN	Rotating machine which converts mechanical energy into electrical energy
Gramme centimeter	gcm	
Gramme (force)	gf	

Term(s)	Acronym / Unit / Abbreviation	Definition
Gramme (mass)	g	
Ground	GND	Electrical conductor used as a common return for an electrical circuit or circuits, and with a relative zero potential
H		
Hard fault		A fault currently present in the system
Headlamp	HL	
Heated Oxygen Sensor	HO2S	Electrically heated oxygen sensor which induces fueling corrections
Hertz (frequency)	Hz	Frequency, one cycle per second
High Mounted Stoplamp	HMSL	
High tension (electrical)	ht	
Hour	h	
Hydrocarbon	HC	
I		
Idle Air Control	IAC	Electrical control of throttle bypass air
Idle Air Control Valve	IACV	Stepper motor driven device which varies the volume of air by-passing the throttle to maintain the programmed idle speed
Ignition	ign	
Ignition amplifier	IA	Device which amplifies the ignition system output
Ignition ground	IGN GND	
Inertia Fuel Shut-off	IFS	An inertia system that shuts off the fuel supply when activated by pre-determined force limits brought about by (e.g.) collision
Inertia Fuel Shut-off Switch	IFSS	Shuts down fuel and ignition systems in the event of a vehicle impact
Intake air		Air drawn through a cleaner and distributed to each cylinder for use in combustion
Input	I/P	An electrical input signal to a controlling device
Intake Air Temperature	IAT	Temperature of intake air
Intake Air Temperature Sensor	IATS	Device used to measure IAT
Intake Air Temperature Sensor Ignition	IATSI	Thermistor which signals the ECM to retard the ignition timing in response to high inlet air temperatures
Intake Air Temperature Sensor Injection	IATSF	Thermistor which inputs air density information to the ECM
Internal diameter	i.dia	
International Standards Organization	ISO	
J		
K		
Kilogramme (mass)	kg	
Kilogramme (force)	kgf	
Kilogramme force per square centimeter	kgf/cm2	
Kilometer	km	
Kilometer per hour	km/h	
Kilopascal	kPa	
Kilovolt	kV	
Knock Sensor	KS	Sensor which detects the onset of detonation, and signals the ECM to retard the ignition
L		
Left-hand	LH	
Left-hand drive vehicle	LHD	
Left-hand thread	LH Thd	
Light Emitting Diode	LED	Light-emitting semiconductor diode used in alphanumeric displays and as an indicator lamp
Liquid Crystal Display	LCD	Optical digital display system, applied voltage to which varies the way the crystals reflect light, thereby modifying the display
Liter	L	
Low tension	lt	Primary circuit of the ignition system, linking the battery to the primary winding in the ignition coil
M		
Malfunction Indicator Lamp	MIL	A required on-board indicator to alert the driver of an emission related malfunction
Manifold Absolute Pressure	MAP	Absolute pressure of the intake manifold air
Manifold Absolute Pressure Sensor	MAPS	Sensor located in the ECM and ported to the intake manifold
Manifold Surface Temperature	MST	
Mass Air Flow	MAF	System which provides information on the mass flow rate of the intake air to the engine
Mass Air Flow Sensor	MAFS	Hot-wire sensor which monitors air flow into the intake manifold for fueling and ignition control
Maximum	max.	
Meter (measurement)	m	
Metric (screw thread, e.g. M8)	M	
Microfarad	MFD	Unit of electrical capacitance, one millionth of a farad
Millimeter	mm	
Millimeter of mercury	mmHg	
Millisecond	ms	
Minimum	min.	
Minute	minute	
Model Year	MY	
Module	M	Self contained group of electrical/electronic components which is designed as a single replaceable unit
Modulating signal	MD	A shift process signal to the TCM on SC vehicles
Motorized In-Car Aspirator	MIA	Device which constantly samples cabin temperature by passing air over a sensor, and communicates with the A/CCM to modify A/C system performance to suit
Multi Protocol Adaptor	MPA	An interpreter for the various data languages present on a vehicle
N		

Term(s)	Acronym / Unit / Abbreviation	Definition
National Institute of Occupational Safety and Health (US)	NIOSH	
Newton	N	SI unit of force. 1 N = 0.2248 pounds force
Newton meter	Nm	SI unit of torque. Must not be confused with nm (nanometer)
Nitrous Oxide	NOx	Compounds of nitrogen and oxygen formed at high temperatures. Major source of exhaust-gas air pollution
Non-Volatile Random Access Memory	NVRAM	RAM which retains memory even if power supply is interrupted
Normally aspirated		Fueling system using intake air at atmospheric pressure; not supercharged or turbocharged
Normally Closed	NC	
Normally Open	NO	
North American Specification	NAS	Vehicles for sale in the USA and Canadian markets
Number	No.	
O		
Occupational Safety and Health Administration (US)	OSHA	
On-Board Diagnostic	OBD	A system that monitors some or all computer input and output control signals. Signal(s) outside the pre-determined limits imply a fault in the system or a related system
On-Board Refueling Vapor Recovery	ORVR	
Original Equipment Manufacturer	OEM	
Output	O/P	An electrical output signal from a controlling device
Outside diameter	o. dia	
Oxides of nitrogen	NOx	
Oxygen sensor	O2S	A sensor which detects oxygen content in the exhaust gases
P		
Parameter Identifier	PID	An index number referring to a parameter within a module without knowledge of its storage location
Park Neutral Position	PNP	
Park Neutral Position Switch	PNPS	Indicates the selected non-drive modes of the (automatic) transmission
Part number	part no.	
Portable Diagnostic Unit	PDU	Comprehensive electrical diagnosis system specific to Jaguar vehicles
Position	pos'n	
Power Assisted Steering	PAS	Hydraulic pump-assisted steering system
Power Steering Pressure	PSP	
Programmable Electronic Control Units System	PECUS	Process whereby a common ECM is programmed on the production line to suit the market requirements of a particular vehicle
Programmable Read-Only Memory	PROM	ROM with some provision for setting the stored data after manufacture
Pulse Width Modulation	PWM	A method of control in an electronic control system in which the duration of pulses in a pulse train is proportional to the amplitude of the modulating signal
Q		
R		
Random Access Memory	RAM	Fast access memory store which is accessible for entry or extraction of data
Read-Only Memory	ROM	Fast access memory in which data is fixed and may not be changed
Reservoir	RES	Container, usually for oils, coolants or hydraulic fluids
Return	RTN	A dedicated sensor ground circuit
Revolutions Per Minute	RPM	Shaft speed of a device, usually an engine or motor
Right-hand	RH	
Right-hand drive vehicle	RHD	
S		
Scan Tool	ST	Device that interfaces with and communicates information on a data link
Seat Control Module	SCM	Module controlling the seat motor systems (not electric raise/lower-only seats)
Secondary Air		Air provided to the exhaust system
Secondary Air Injection	AIR	System used for a period of time each time the engine is started, unless certain temperature criteria are met. Pumps air directly into the exhaust system which generates extra heat and reduces the time taken for the catalytic converters to reach operating temperature
Secondary Air Injection Bypass	AIRB	Vents secondary air to atmosphere
Secondary Air Injection Check Valve	AIRC	Valve which prevents back-flow of exhaust gas to the AIR system when the system is inoperative
Secondary Air Injection Diverter	AIRD	Diverts secondary air to either the catalyst or exhaust manifold
Secondary Air Injection Magnetic Clutch	AIRPC	Clutch mounted on the AIRP drive shaft
Secondary Air Injection Pump	AIRP	Mechanically driven rotary vane pump, driven through the AIRPC
Secondary Air Injection Relay	AIRR	Controls the injection of air into the exhaust system
Secondary Air Injection Switching Valve	AIRS	Vacuum operated valve backing-up the AIRC
Security and Locking Control Module	SLCM	Module controlling the vehicle's security and closure-locking functions
Sensor	S	Generic name for a device that senses either the absolute value or a change in a physical quantity such as temperature, pressure or flow rate, and converts that change into an electrical quantity signal
Service Repair Operation (number)	SRO	Number generated by Jaguar Methods and Techniques system which relates to the time allowed to complete a repair operation. Further information on the system can be found in the separate Jaguar Publications (for each model range) entitled 'Repair Operation Times'
Shift signal	SD	A shift process signal to the TCM on SC vehicles

Term(s)	Acronym / Unit / Abbreviation	Definition
Shift Solenoid	SS	Controls shifting in an automatic transmission
Signal return	SIG RTN	
Sliding Roof Control Module	SRCM	
Society of Automotive Engineers	SAE	
Speed Control Control Module	SCCM	Module controlling Speed Control System
Square centimeter	cm2	
Standard	std	
Standard Corporate Protocol	SCP	A high-speed, serial communications system linking all body system control modules. Control messages and data are passed between modules at up to 786 messages per second
Supercharger	SC	An intake system which utilizes a supercharger (mechanically driven device that pressurizes intake air, thereby increasing density of charge air and the consequent power output from a given displacement)
Supercharger Bypass	SCB	
Switch	SW	
T		
Tachometer	TACH	A circuit that provides input for an electronic tachometer display
Thermal Vacuum Valve	TVV	Controls vacuum levels or routing based on temperature
Throttle Body	TB	Device containing the throttle
Throttle Position	TP	
Throttle Position Sensor	TPS	Interprets throttle position and movement to identify idle, acceleration and full-power demands
Top Dead Center	TDC	
Torque Converter Clutch	TCC	
Total indicator reading	TIR	The total indicated movement on a DTI with the test piece rotated through 360°
Transmission Control Module	TCM	Controls the shifting pattern of the (automatic) transmission
Transmission Control Switch	TCS	Modifies the operation of electronically controlled transmissions
Transmission Oil Temperature	TOT	Indicates temperature of transmission fluid
Transmission Range	TR	The range in which the transmission is operating
Transmission Speed Sensor	TSS	Indicates rotational speed of transmission output shaft or turbine shaft
V		
Vacuum Solenoid Valve	VSV	Vacuum operated valve used in the speed control system
Vacuum Solenoid Valve (atm)	VSV VA	Vacuum atmospheric valve used in the speed control system
Vacuum Solenoid Valve (rel)	VSV VR	Vacuum release valve used in the speed control system
Vacuum Solenoid Valve (vac)	VSV VV	Vacuum valve used in the speed control system
Variable Valve Timing	VVT	A system by which the relationship of the crankshaft and camshaft may be altered during engine running
Vehicle Battery Adapter	VBA	Provides electrical power to the PDU and supplies a battery reference level
Vehicle Condition Monitor	VCM	Instrument panel display which warns of faults
Vehicle Emission Control Information Label	VECI Label	
Vehicle Identification Number	VIN	Number assigned to the vehicle by the manufacturer, primarily for licensing and identification purposes
Vehicle Interface Adapter	VIA	Extends the PDU capability and provides a parallel interface to vehicle harnesses and ECMs
Vehicle Speed Sensor	VSS	Sensor which provides vehicle speed information
Viscosity Index	VI	
Voltage Regulator	VR	Device which regulates the variable output voltage of a generator
W		
Watt	W	SI unit of power (1 hp = 745.7 watts)
Wide Open Throttle	WOT	Full throttle position

Identification Codes - Identification Codes

Description and Operation

Engine Number

The engine number (10 digits) is stamped on a raised pad on the front of the engine block near the thermostat housing. The piston grade reference (8 digits) is also shown.

Automatic Transmission Number

The serial number of the transmission unit is displayed on a metal or bar code label attached to the LH side of the transmission casing.

Vehicle Identification

The VIN and other information according to market, is displayed on a label located on the LH door post above the door striker plate, visible when the door is open. For certain markets, the VIN appears on a bar code label referred to as the Certification Label and additionally carries the month and year of manufacture, vehicle weight data and paint and trim codes. The VIN is also displayed on a plate visible through the windshield. It is essential that the vehicle identification number (VIN) is quoted when ordering parts and in all associated correspondence.

Date of Manufacture (Certain markets only)

The date of manufacture (Build Date) of a vehicle is defined as the calendar month and year in which the body and powertrain are combined and the completed vehicle leaves the production line. For certain markets, VIN labels carry the month and year of manufacture. For other markets, the vehicle Build Date is also displayed on a metal plate located at the top of the battery tray in the trunk.

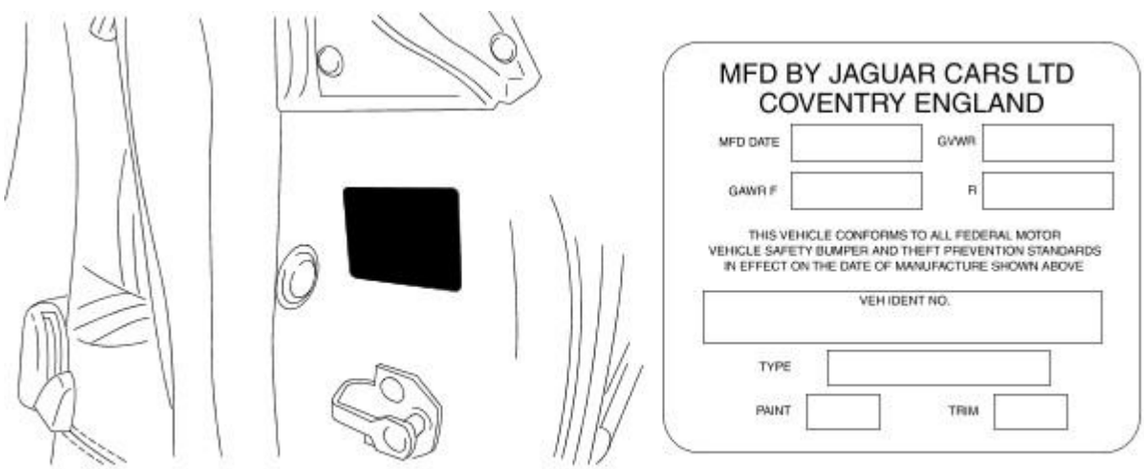

E32745

Item	Description
GVWR	Gross Vehicle Weight Rating
GAWR F	Gross Front Axle Weight Rating
GAWR R	Gross Rear Axle Weight Rating
Paint	Paint Code
Trim	Trim Code

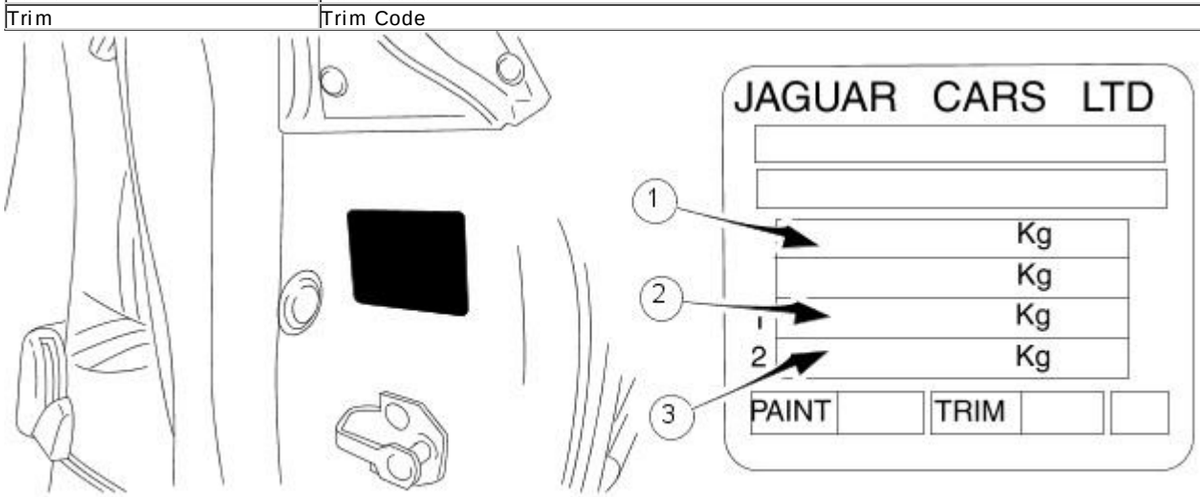

E32735

Item	Description
1	Gross Vehicle Weight
2	Maximum Permitted Front Axle Loading
3	Maximum Permitted Rear Axle Loading

ANTI-THEFT LABELS

For some markets, anti-theft labels bearing the VIN printed on a special anti-forgery background are positioned on certain body

components. An additional anti-theft label is positioned on the LH side of the engine/automatic transmission casing. Anti-theft labels must not be removed from a vehicle unless necessitated by component renewal.

Published: 11-May-2011

Jacking and Lifting - Jacking

Description and Operation

The vehicle jack and wheel chock are stored in the trunk as part of the vehicle toolkit.

Use of the vehicle jack and workshop jacks is described in the general procedures in this section.

Jacking Points

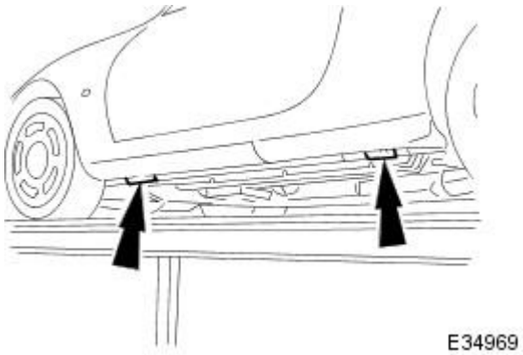

The vehicle jacking points:

- Are situated below the body side members on the sill flange.
- Consist of a reinforced plate, profiled to provide positive engagement with the vehicle jack.
- Are located behind the front wheels for lifting the front of the vehicle.
- Are located in front of the rear wheels for lifting the rear wheels.
- Provide the support points for the four lifting pads of a wheel-free lift.

Published: 11-May-2011

Jacking and Lifting - Safety Precautions

Description and Operation

The following safety precautions must be observed when raising the vehicle to perform service operations:

- Never rely on a jack alone to support a vehicle; use suitable vehicle stands to provide rigid support.
- When working beneath a vehicle, whenever possible use a ramp or inspection pit instead of a jack and vehicle stands.
- Ensure that the vehicle is standing on firm, level ground before using a jack.
- Do not rely on the parking brake alone; chock the wheels and put the transmission into Park if possible.
- Check that any lifting equipment used has adequate capacity for the load being lifted and is in proper working order.

Jacking and Lifting - Vehicle Recovery

Description and Operation

• NOTE: Prior to recovery, ensure that the vehicle keys are available and the security system disarmed.

Vehicle recovery methods are:

- By flat-bed transporter.
- By rear suspended tow.
- By emergency towing for very short distances.

The selector lever can be manually unlocked from the Park position in the event of electrical failure or when moving the vehicle without power. Refer to the general procedure in this section.

Transporter or Trailer Recovery

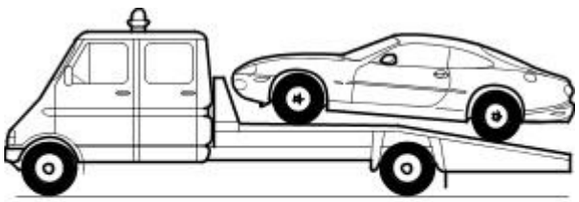

E34965

When the vehicle is being recovered by transporter or trailer:

- The parking brake must be be applied and the wheels chocked.
- The gear selector lever must be in Neutral. Do not select Park as the parking lock mechanism may be damaged by the forward and backward rocking motion of the vehicle.
- The vehicle must be securely tied down to the transporter or trailer. Do not use the vehicle towing eyes.

Rear Suspended Tow

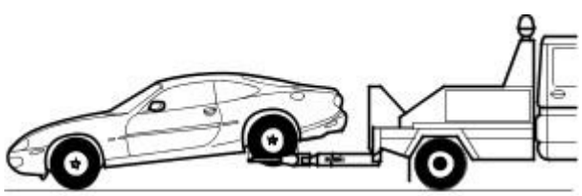

E34966

When the vehicle is being recovered by rear suspended tow:

- The ignition key must be removed from the ignition switch to lock the steering.
- The rear wheels must be correctly positioned in the lifting cradle and securely tied down.

Emergency Towing

WARNING: IF THE ENGINE IS NOT RUNNING, THE STEERING WILL BECOME HEAVY AND THE FORCE NECESSARY TO EFFECTIVELY APPLY THE BRAKES WILL BE GREATLY INCREASED.

CAUTION: A vehicle with a defective transmission must be towed by rear suspended tow.

When the vehicle is being towed on its own wheels:

- Local regulations for the towing of vehicles must be followed. In some countries the registration number of the towing vehicle and an 'On Tow' sign or warning triangle must be displayed at the rear of the towed vehicle.
- The gear selector lever must be in Neutral.
- The ignition switch must be in position II to release the steering lock and make the direction indicators, horn and stop lamps operate.
- A distance of 0,8 km (0.5 mile) must not be exceeded.
- A speed of 48 km/h (30 mph) must not be exceeded.
- The tow rope must be attached at one of the front towing eye positions.

Front Towing Eye

E34968

The front towing eye:

- Is stored with the vehicle toolkit in the trunk.
- Can be used for emergency towing or winching the vehicle onto a transporter.

Front Towing Eye Location

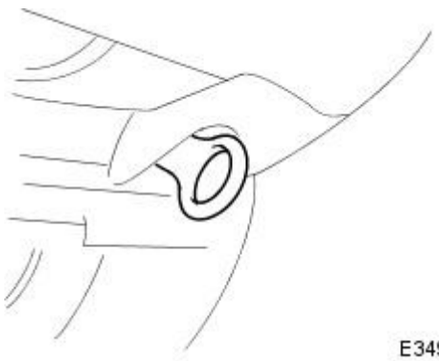

E34967

The front towing eye screws into the front lower body crossmember at the left- or right-hand side of the vehicle, after the removal of a blanking plug.

Rear Towing Eye

Rear Towing Eye Location

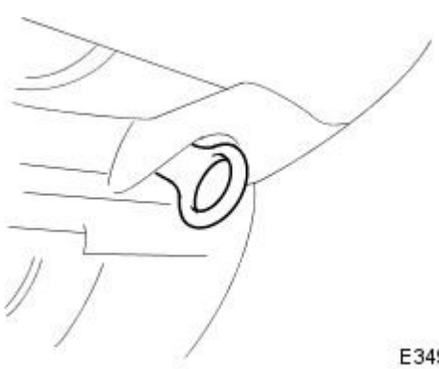

E34967

The rear towing eye screws into the right-hand side of the trunk floor after the removal of a blanking cover. This eye must not be used for towing another vehicle.

Jacking and Lifting - Using the Vehicle Jack

General Procedures

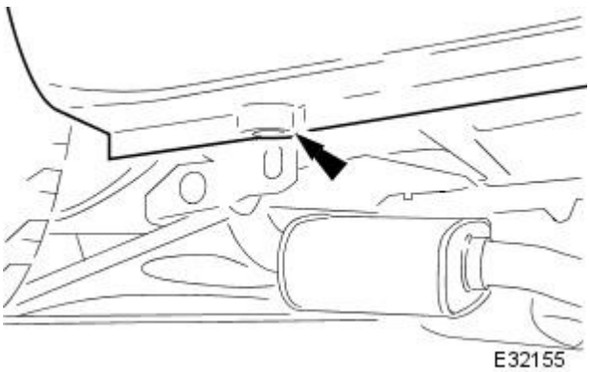

1. WARNING: ENSURE THAT THE VEHICLE IS STANDING ON FIRM, LEVEL GROUND.

Position the jack at one of the four vehicle jacking points.

- Put the parking brake ON and the transmission in Park.
- Chock the wheels to prevent movement of the vehicle.

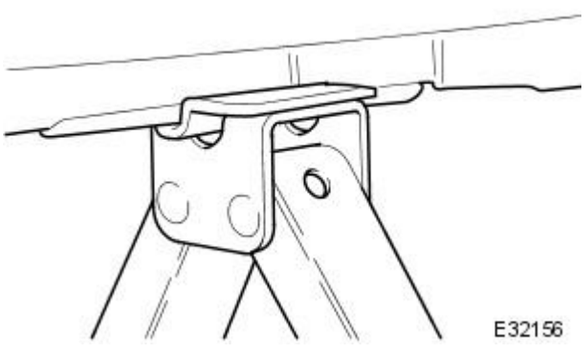

2. Locate the head of the jack securely in the sill profile.

3. Raise/lower the vehicle using the jack ratchet handle.

- Fit the handle to the jack using the socket extension.

Published: 11-May-2011

Jacking and Lifting - Using the Workshop Jack

General Procedures

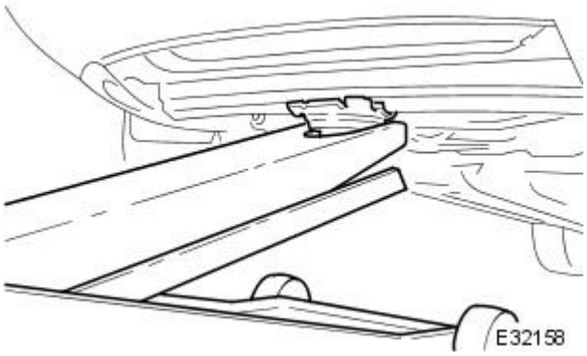

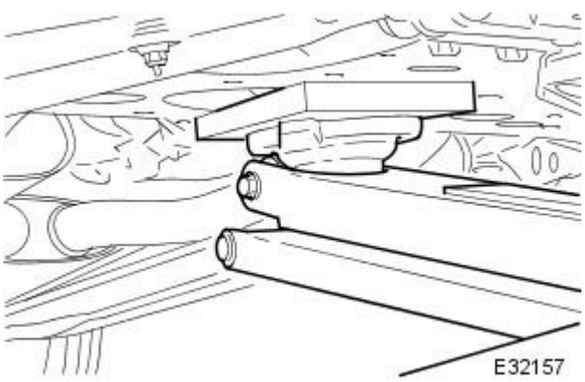

1. WARNINGS:

DO NOT ATTEMPT TO RAISE THE VEHICLE BY LIFTING ONE FRONT WHEEL.

DO NOT POSITION THE JACK HEAD ON THE ALUMINUM SUSPENSION CROSSBEAM.

To raise both front wheels:

1. Position the jack centrally under the front body crossmember.
2. Raise the vehicle.
3. Place suitable vehicle stands in position at the front vehicle jacking points.
4. Lower the vehicle onto the vehicle stands.

2. To raise both rear wheels:

1. Position the jack centrally under the rear suspension subframe.
2. Place a block of wood between the jack head and the subframe.
3. Raise the vehicle.
4. Place suitable vehicle stands in position at the rear vehicle jacking points.
5. Lower the vehicle onto the vehicle stands.

Suspension System - General Information -

Lubricants, Fluids, Sealants and Adhesives

Unit	Specification
Loctite	270
Grease	Shell Retinax 'A'
Grease	Castrol 'NTR'

Front Wheel Bearings

Type	Maximum End Float
Cartridge	0.13 mm

Front Suspension Dimensions

Component	Dimension
Hub face - maximum run-out	0.038 mm

Rear Suspension Dimensions

Component	Dimension
Hub face - maximum run-out	0.057 mm

Vehicle ride height

Model	Model Year	VIN RANGE		Market	Showroom mm(in)		Curb mm(in)	
		From	To		Front	Rear	Front	Rear
XK8	1997 to current	001246	Current	All	401 (15.78)	416 (16.37)	400 (15.74)	405 (15.94)
XKR	"	"	"	All	401 (15.78)	415 (16.33)	400 (15.74)	405 (15.94)

- Ride height is measured from the center of the wheel to the apex of the wheel arch, through the wheel center line.
- Showroom is with all fluids at full and 9 liters (9.5 US quarts) of fuel.
- Curb is with all fluids at full and a full tank of fuel.
- All figures quoted assume a ± 15 mm (0.59in) anticipated build variance and condition.

Wheel Alignment - Front Camber

1997 onwards VIN - 001246 to current	Units	Camber						Balance (RH - LH)
				Left - Hand		Right - Hand		
		Min	Max	Min	Max	Min	Max	
All Right-Hand drive and Japan	Degrees/minutes	-1° 17'	-0° 17'	-0° 45'	+0° 14'	-0° 11'	+1° 13'	
	Decimal degrees	-1.28°	-0.28°	-0.76°	+0.24°	-0.19°	+1.21°	
USA, Canada and Mexico	Degrees/minutes	-1° 11'	-0° 11'	-1° 18'	-0° 18'	-0° 50'	+0° 34'	
	Decimal degrees	-1.18°	-0.18°	-1.30°	-0.30°	-0.83°	+0.57°	
Rest of World	Degrees/minutes	-1° 14'	-0° 14'	-1° 17'	-0° 17'	-0° 44'	+0° 40'	
	Decimal degrees	-1.24°	-0.24°	-1.28°	-0.28°	-0.74°	+0.66°	

- All the above figures are at "showroom" height. (See ride height section above).
- Tires must be inflated to normal pressure.
  For additional information, refer to Section 204-04 Wheels and Tires.

Wheel Alignment - Front Castor

1997 onwards VIN - 001246 to current	Units	Castor						Balance
				Left - Hand		Right - Hand		
		Min	Max	Min	Max	Min	Max	
All Right-Hand drive and Japan	Degrees/minutes	+6° 28'	+7° 52'	+6° 20'	+7° 44'	-0° 50'	+0° 34'	
	Decimal degrees	+6.47°	+7.87°	+6.33°	+7.73°	-0.84°	+0.57°	
USA, Canada and Mexico	Degrees/minutes	+5° 52'	+7° 16'	+6° 38'	+8° 02'	+0° 04'	+1° 28'	
	Decimal degrees	+5.87°	+7.27°	+6.64°	+8° 04°	+0° 06°	+1.46°	
Rest of World	Degrees/minutes	+6° 15'	+7° 39'	+6° 28'	+7° 52'	-0° 29'	+0° 55'	
	Decimal degrees	+6.25°	+7.65°	+6.47°	+7.87°	-0.49°	+0.91°	

- All the above figures are at "showroom" height. (See ride height section above).
- Tires must be inflated to normal pressure.
  For additional information, refer to Section 204-04 Wheels and Tires.

Wheel Alignment - Front Toe

1997 onwards VIN - 001246 to current	Units	Total Toe	
		Min	Max
All Right-Hand drive and Japan	Degrees/minutes	+0° 05'	+0° 25'
	Decimal degrees	+0.08°	+0.42°
USA, Canada and Mexico	Degrees/minutes	+0° 05'	+0° 25'
	Decimal degrees	+0.08°	+0.42°
Rest of World	Degrees/minutes	+0° 05'	+0° 25'
	Decimal degrees	+0.08°	+0.42°

- All the above figures are at "showroom" height. (See ride height section above).
- Tires must be inflated to normal pressure.
  For additional information, refer to Section 204-04 Wheels and Tires.

Wheel Alignment - Rear Camber

1997 onwards VIN - 001246 to current	Units	Camber						Balance (RH - LH)
				Left Hand		Right Hand		
		Min	Max	Min	Max	Min	Max	
All Markets	Degrees/Minutes	-0° 54'	-0° 06'	-0° 54'	-0° 06'	-1° 00	+1° 00	
	Decimal Degrees	-0.90°	-0.10°	-0.90°	-0.10°	-1.00°	+1.00°	

- All the above figures are at "showroom" height. See vehicle ride height section above.
- Tires must be inflated to normal pressure.
  For additional information, refer to Section 204-04 Wheels and Tires.

Wheel Alignment - Rear Toe

1997 onwards	Units	Toe

VIN - 001246 to current				Left Hand		Right Hand		Total Toe		Thrust Angle
		Min	Max	Min	Max	Min	Max	Min	Max	
All Markets	Degrees/Minutes	+0°05'	+0° 15'	+0°05'	+0° 15'	0° 10'	+0° 30'	-0° 05'	+0° 05'	
	Decimal Degrees	+0.08°	+0.25°	+0.08°	+0.25°	0.17°	+0.50°	-0.08°	+0.08°	

- All the above figures are at "showroom" height. See vehicle ride height section above.
- Tires must be inflated to normal pressure.
  For additional information, refer to Section 204-04 Wheels and Tires.

Published: 11-May-2011

Suspension System - General Information - Suspension System

Description and Operation

Details of the Suspension System (including Wheels and Tires) can be found in Sections 204-01, 204-02, 204-03 and 204-04.

Suspension System - General Information - Front Camber Adjustment

General Procedures

1. The front suspension on vehicles up to VIN 031302 does not provide the facility to adjust the camber angle. This can only be achieved by replacing the original rear fulcrum-bolt of the lower-wishbone, with an eccentric fulcrum-bolt. The eccentric bolt should only be fitted when directed by Jaguar Technical Support. See operation (57.65.02). Eccentric fulcrum bolts are supplied by Jaguar Cars Ltd.

Description of Eccentric Bolt

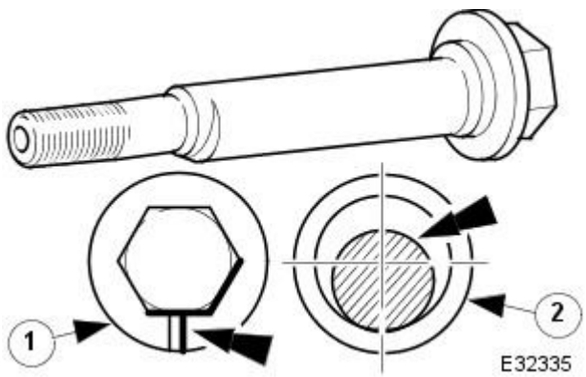

1. Both ends of the eccentric fulcrum bolt, i.e. the threaded section and the head are concentric with the holes in the crossbeam fulcrum flanges. However, the center section of the bolt (arrowed), which retains the wishbone rear bush, is eccentric to the two ends of the bolt. When the bolt is installed; rotation of the bolt will cause the lower-wishbone rear arm to move in and out. A raised strip (arrowed) on the bolt head flange indicates the position of the bolts eccentric section, to aid positioning when adjusting the camber.

   The function of the eccentric bolt when it is rotated, is to increase or decrease the distance between the lower-wishbone fulcrum center at the crossbeam and the ball joint center, therefore altering the camber angle.

Installing the Eccentric Bolt

Removal

1. CAUTION: Replacement of nuts and bolts: Various thread-locking devices are used on nuts and bolts throughout the vehicle. These devices restrict the number of times a nut or bolt can be used. See section 100-00 for information.

• NOTE: An eccentric bolt must be fitted to both front lower wishbones.

Open engine compartment and fit paintwork protection covers to fenders.

2. Raise vehicle on a four-post lift.
3. Position road wheels in the central position.
4. Raise front of vehicle and support on stands. Refer to section 100-02.
5. Release steering column from pinion shaft.

   1. Remove clamp bolt.

   - Move column upwards to release.

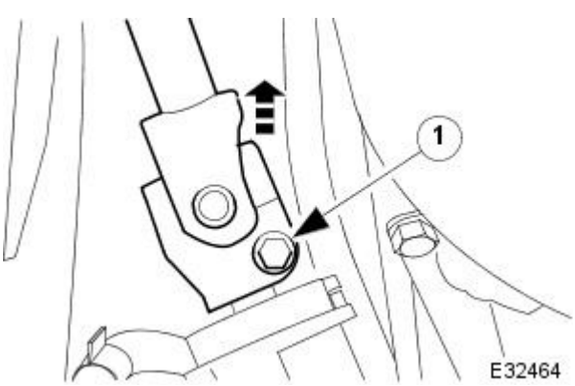

6. Disconnect connector from steering rack transducer.

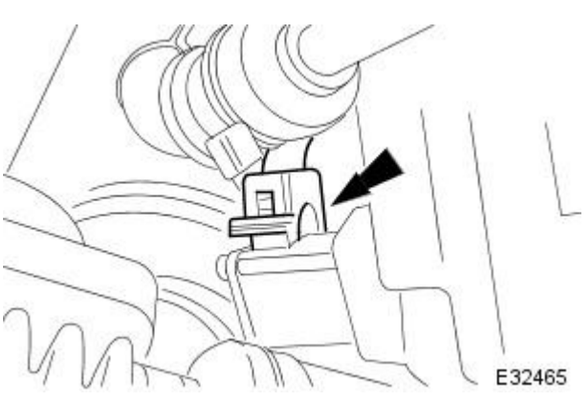

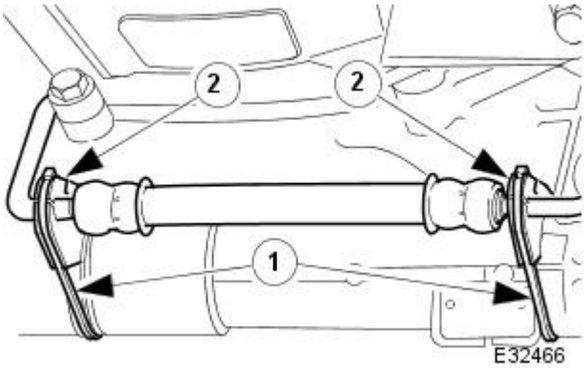

7. Release hose from steering rack.

1. Remove tie straps.
2. Remove insulation rubbers.

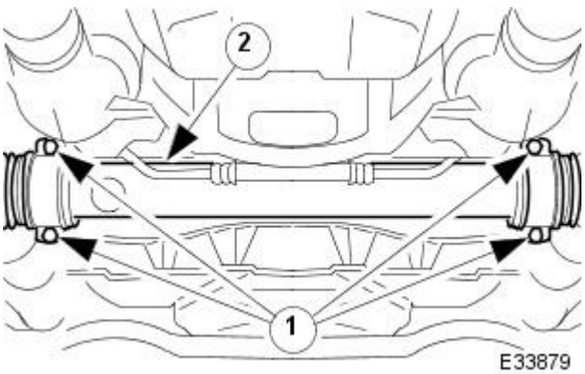

8. Lower steering rack.

CAUTION: Do not allow the weight of steering rack to hang on the PAS pipes.

1. Remove bolts from brackets.
2. Carefully lower steering rack.

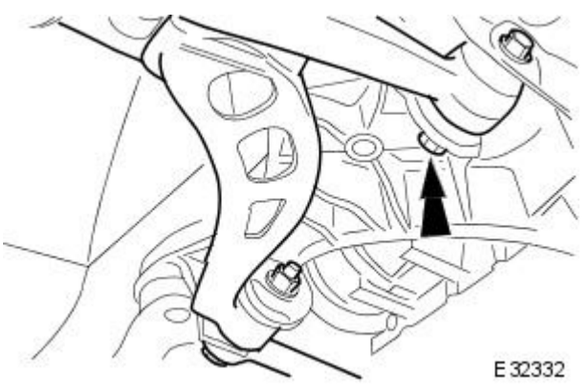

9. Remove nut and bolt from rear arm of lower wishbone.

- Repeat procedure on opposite-side wishbone.

Installation

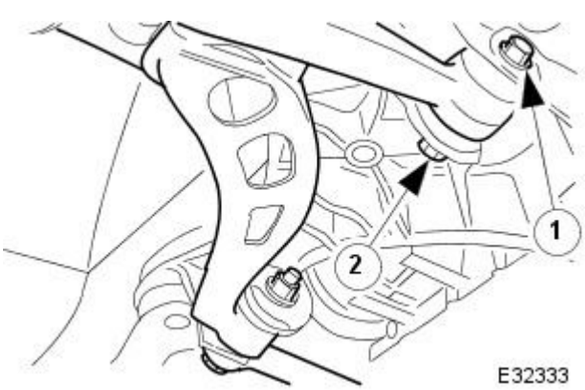

10. Fit eccentric bolt to rear arm of lower wishbone.

1. Fit bolt, make sure bolt is fully entered into crossbeam flange.
2. Fit and tighten nut but leave loose enough to allow bolt to be rotated.

- Repeat procedure on opposite-side wishbone.

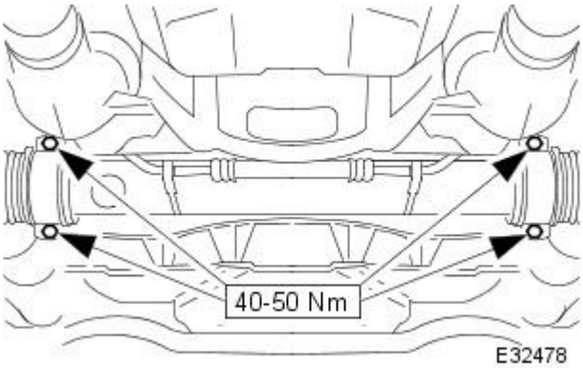

11. Fit steering rack.

- Align steering rack to vehicle.
- Fit and tighten bolts.

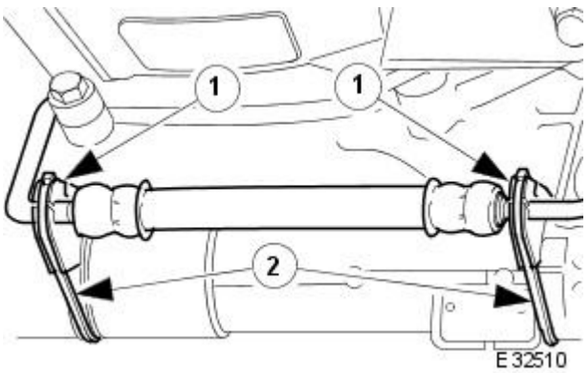

12. Secure hose to steering rack.

1. Fit insulation rubbers.
2. Secure hose to steering rack with tie straps.

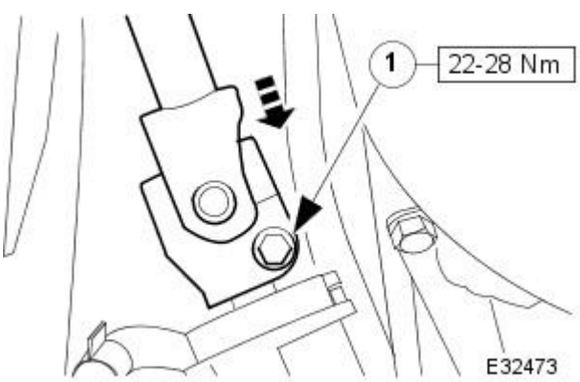

13. NOTE: Make sure steering wheel and road wheels are in the central position before fitting steering column.

Fit steering column to pinion shaft.

- Move column downwards onto pinion shaft.
  1. Fit and tighten clamp bolt.

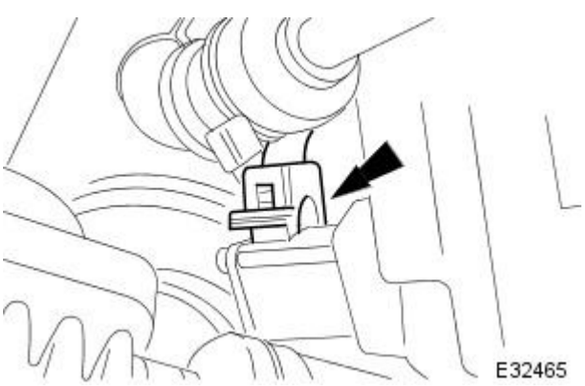

14. Connect electrical connector to steering rack transducer.

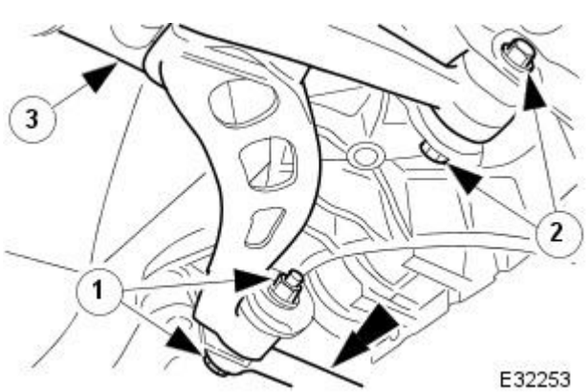

15. Rotate eccentric bolt until the raised indicator strip on the bolt head flange is in the 6 o'clock position. This position will set the camber angle to its original setting.

- Repeat procedure on opposite-side eccentric bolt.

16. Remove stands and lower jack.

17. Lower four-post lift and remove vehicle.
18. Remove paintwork protection covers from fenders.
19. Adjust camber. See below.

Adjusting Camber

• NOTE: Both eccentric bolts should now be in the position as detailed above, i.e. with the indicator strip in the 6 o'clock position.

- Rotating the eccentric bolt through 90 degrees from the 6 o'clock position, so that the indicator strip is outboard of the bolt center will cause the lower-wishbone rear fulcrum to move outward. This will, depending on original camber angle, either decrease the positive camber or increase the negative camber.
- Rotating the eccentric bolt through 90 degrees from the 6 o'clock position, so that the indicator strip is inboard of the bolt center will cause the lower-wishbone rear fulcrum to move inward. This will, depending on original camber angle, either increase the positive camber or decrease the negative camber.

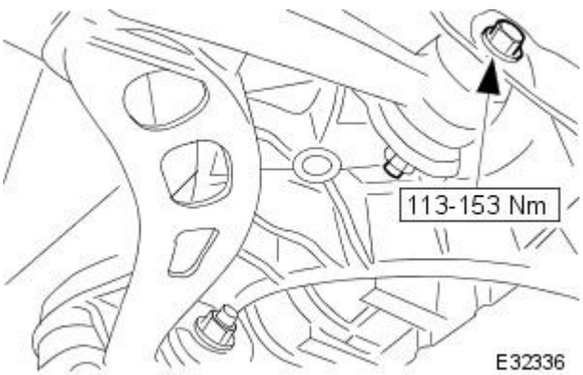

1. Adjust the camber angle to the correct setting. Refer to 204-01 specifications for settings.
2. After adjustment of the camber angle, measure the suspension geometry, record the results and re-adjust if necessary.
3. Tighten eccentric fulcrum bolt.
   - Repeat procedure on opposite-side eccentric bolt.
4. Check toe setting and adjust if necessary. See 204-01 specifications.
5. Road test vehicle.

Suspension System - General Information - Front Caster Adjustment

General Procedures

CAUTION: If a vehicle has a suspension geometry problem, all geometry settings must be investigated and corrected before making any adjustments to the caster setting.

1. If a suspension problem is suspected the 'Suspension Geometry Record Form' provided by Jaguar Technical Support must be completed, and Technical Support consulted, before any adjustments are carried out. See operation (57.65.02).

2. NOTE: Alteration of the caster setting will affect the camber and toe settings.

Fit paintwork protection covers to fenders.

3. Raise front of vehicle and support on stands. Refer to section 100-02.

4. Remove front wheels. Refer to section 204-04.

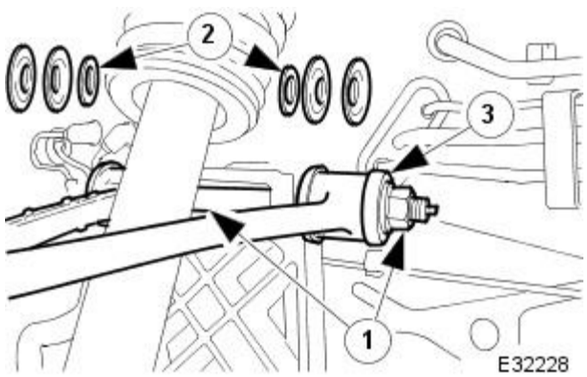

5. CAUTION: Do not allow the weight of the vertical link to hang on the brake hose.

• NOTE: Note the position of the shims before removing the fulcrum bolt.

Remove fulcrum bolt.

1. Remove nut.
2. Remove fulcrum bolt: collect washers and shims.
3. Secure wishbone.

6. CAUTION: The total number of shims fitted to each fulcrum bolt must always remain the same, regardless of adjustment to the front and rear packs, i.e. no shims are to be added or removed from the fulcrum bolt.

Caster angle is adjusted by interchanging the shims between the front and rear arm of each wishbone. See 204-01 specifications for settings.

7. Use the illustration and table below to calculate the required positioning of the shims needed to set the caster angle.

8. NOTE: Caster specification is subject to market variations, as shown in the following table, which is the result of differing road surfaces and market preferences.

To increase positive caster, the shim thickness at the front of the wishbone 1 or 3 must be decreased, and the rear 2 or 4 increased by the same amount.

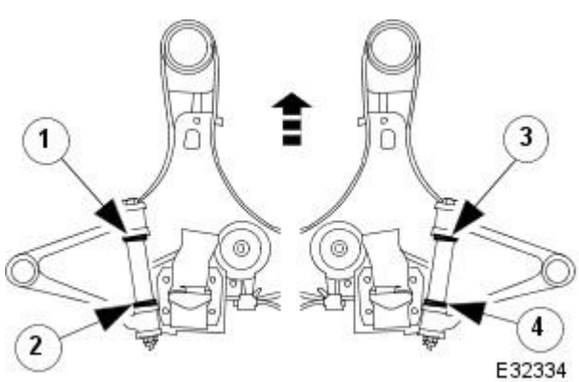

9. To decrease positive caster, the shim thickness at the front of the wishbone 1 or 3 must be increased and the rear 2 or 4 decreased by the same amount.

	N. America	U.K.	R.O.W.
Pack 1 Left Side Front	• Thick x 2 • Thin x 1	Thick x 1	• Thick x 1 • Thick x 1
Pack 2 Left Side Rear	Thin x 1	• Thick x 1 • Thin x 2	• Thick x 1 • Thin x 1
Pack 3 Right Side Front	Thin x 1	• Thick x 1 • Thin x 1	• Thick x 1 • Thin x 1
Pack 4 Right Side Rear	• Thick x 2 • Thin x 1	• Thick x 1 • Thin x 1	• Thick x 1 • Thin x 1

- The thick shim is 1.6 mm thick, paint code blue, it will effect caster by 0.4 degrees.
- The thin shim is 0.9 mm thick, paint code red, it will effect caster by 0.2 degrees.

- The total number of shims allocated to each wishbone fulcrum bolt is 2 thick and 2 thin shims.

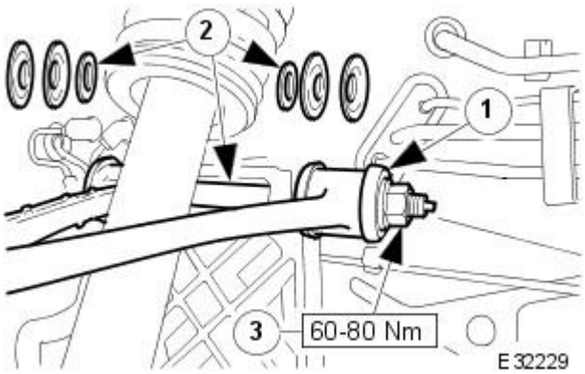

10. Fit fulcrum bolt.

1. Align wishbone to crossbeam.
2. Fit fulcrum bolt, and shims and washers.
3. Fit and tighten nut.

11. Fit road wheels. Refer to section 204-04.

12. Remove stands and lower vehicle. Refer to section 100-02.

13. Remove paintwork protection covers.

14. Check caster setting is correct.

15. Check camber and toe settings and adjust if necessary. See specification section.

16. Road test vehicle.

Suspension System - General Information - Front Camber and Caster Adjustment

General Procedures

1. The close tolerance machined alloy subframe installed on NA vehicles with VIN up to 031302, precludes the necessity for adjustment of front suspension geometry during vehicle manufacture. Eccentric lower wishbone fulcrum bolts are available as service items, but should only be fitted when directed by Jaguar Technical Support.

   On RHD and Japan market LH drive SC vehicles with VIN up to 031302, eccentric fulcrum bolts securing the lower wishbone to the front crossbeam, facilitate adjustment of wheel camber.

   All RH drive and Japan market LH drive vehicles from VIN 031302, incorporate a long upper wishbone on the RH side of the vehicle and a short upper wishbone on the LH side. There is a 2mm difference between the two wishbones, measured from the centers of the ball joint location and the fulcrum bolt location. The longer wishbone is identified by a countersunk hole in the upper surface adjacent to the ball joint location. All other LH drive vehicles from VIN 031302 onward are fitted with the shorter upper wishbone on both sides. These measures counter the effects of road camber on steering and eliminate the necessity for adjustment of suspension geometry.

• NOTE: The vehicle must be checked to establish that it conforms to the Jaguar original specification, e.g. wheels, tires, tire pressures, etc.

• NOTE: The 'space saver' wheel must not be installed on any of the hubs when measuring suspension geometry.

• NOTE: The vehicle must be unladen and the fuel tank full when measuring suspension geometry.

   Whilst fulcrum bolts remain available as service items, a suspected suspension problem must be reported to Jaguar Technical Support on the 'Suspension Geometry Record Form' provided and Technical Support consulted, before any adjustments are carried out.

2. Road test the vehicle to establish the exact nature of the complaint, e.g. pulling to one side, wander.
3. Measure the suspension geometry, fill in the 'Suspension Geometry Record Form', and contact Jaguar Technical Support for assistance.
4. Technical Support will give advice on the course of action to be taken to rectify the problem.

Published: 11-May-2011

Suspension System - General Information - Rear Toe Adjustment

General Procedures

1. NOTE: The vehicle should be unladen and at curb weight with a full fuel tank when checking and adjusting wheel alignment.

• NOTE: Wheel alignment must not be carried out with a space saver wheel installed on any of the hubs.

• NOTE: Before carrying out any checking or adjustment of wheel alignment, ensure that the vehicle wheels, tires and tire pressures are to Jaguar specification.

• NOTE: Before checking or adjusting rear wheel alignment, examine the vehicle for curb impact damage on wheels and subsequent damage to suspension components.

Position alignment checking equipment on road wheels and following equipment manufacturer's instructions, check and if necessary adjust rear wheel alignment to Specifications in Section 204-02.

Published: 11-May-2011

Suspension System - General Information - Wheel Bearing Circlip Inspection

General Procedures

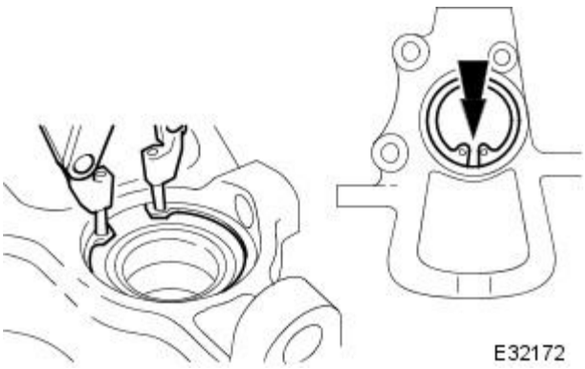

1. When installing the bearing circlips in the vertical link ensure that the ears are located at the lowest position to permit water drainage.

   To achieve this, a perpendicular line drawn through the suspension upper ball-joint will indicate the position of the gap between the circlip ears. This procedure makes an allowance for the caster angle prior to installing the vertical link.

Published: 11-May-2011

Suspension System - General Information - Wheel Bearing Inspection

General Procedures

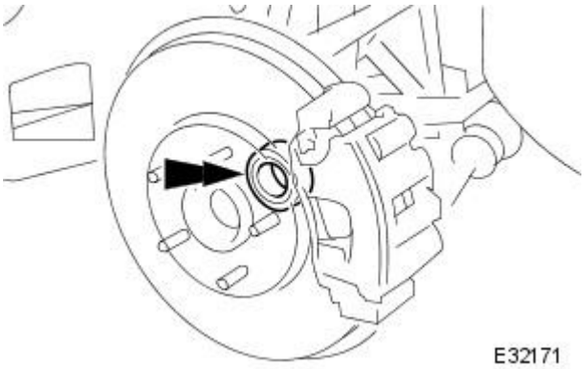

1. During use, a small amount of surplus grease may appear around the bearing seal, this does not indicate a failed bearing or seal. The grease should not be removed as this will act as an additional barrier to the ingress of water or foreign matter.

   Excessive end float or bearing rumble will indicate a failed bearing; for maximum permissible end float see specification section. Take care not to confuse suspension ball joint or upper or lower fulcrum bush movement for bearing end float.

   If the hub is removed for any reason, a new bearing assembly must be installed. Never attempt to re-use a bearing.

Front Suspension -

Lubricants, Fluids, Sealants and Adhesives

Unit	Specification
Loctite	270
Grease	Shell Retinax 'A'
Grease	Castrol 'NTR'

Press-In Loads

Component	Load
Ball Joint-lower	25 - 50 Kn
Ball Joint-upper	25 - 50 Kn

Torques

CAUTION: Replacement of nuts and bolts: Various thread-locking devices are used on nuts and bolts throughout the vehicle. These devices restrict the number of times a nut or bolt can be used. See section 100-00 for information.

Component	Nm
Nut - ball joint-upper	60-80
Nut - ball joint-lower	60-80
Bolt - brake disc shield	9-11
Bolt - crossbeam front mounting bracket to body	77-103
Bolt - crossbeam rear mounting to body	77-103
Bolt - crossbeam to rear mounting	26-34
Bolt - crossbeam to engine mounting	34-46
Nut - hub rotor nut	270-330
Nut - shock absorber lower pivot	60-80
Nut - shock absorber upper stud (non-adaptive damping)	30-40
Nut - shock absorber upper stud (adaptive damping)	16-18
Nut - spring and shock absorber upper-mounting to body	26-34
Bolt - stabilizer bar bracket to crossbeam	22-28
Nut - stabilizer bar to link	60-80
Nut - stabilizer bar link to lower wishbone	39-55
Bolt - wishbone lower front arm to rear arm	128-172
Nut - wishbone upper fulcrum	98-132
Bolt - wishbone lower front-fulcrum	113-153
Bolt - wishbone lower rear-fulcrum	113-153

Front Suspension - Front Suspension

Description and Operation

Front Suspension Components

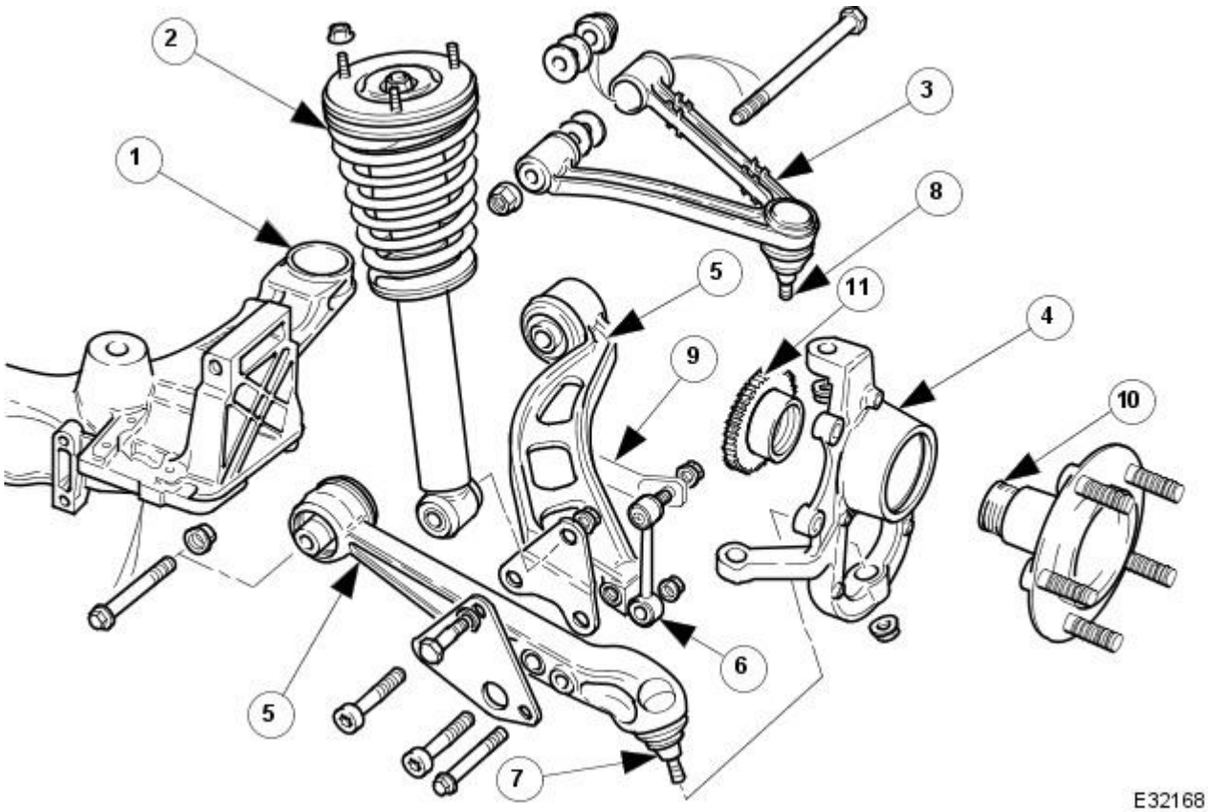

Item	Part Number	Description
1	—	Crossbeam
2	—	Shock Absorber and Spring Assembly
3	—	Upper Wishbone
4	—	Vertical Link
5	—	Lower Wishbone
6	—	Stabilizer Bar Link
7	—	Lower Ball Joint
8	—	Upper Ball Joint
9	—	Stabilizer Bar
10	—	Hub
11	—	Hub Rotor Nut

Crossbeam

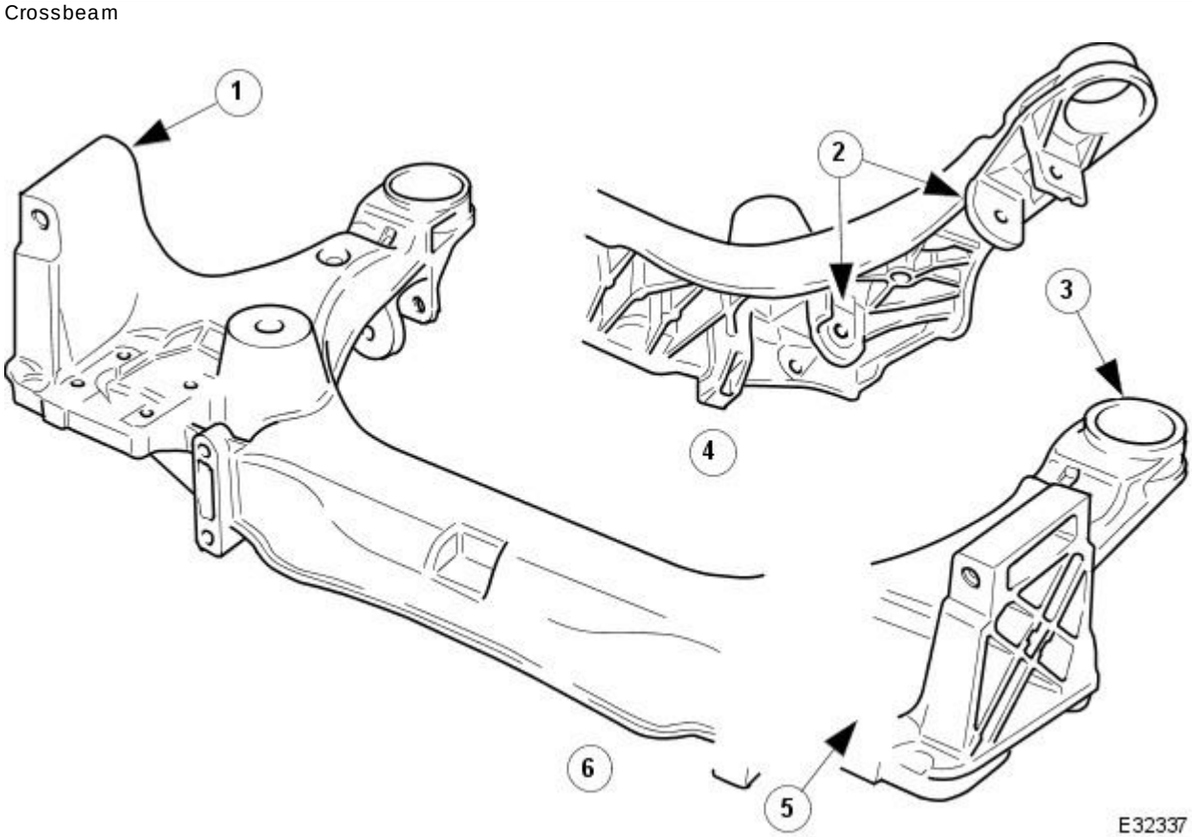

Item	Part Number	Description
1	—	Upper Wishbone Mounting
2	—	Lower Wishbone Mounting
3	—	Front Mounting Bush Location
4	—	Engine Mounting Location
5	—	Rear Mounting Location
6	—	Power Steering Rack Mounting

• CAUTIONS:

Do not attempt to weld or repair the aluminum crossbeam. If it is damaged, a new one must be installed.

Do not use the crossbeam as a jacking point, as damage can occur to the crossbeam, steering rack and brake pipes.

The crossbeam is a lightweight aluminum casting which is bolted at four points to the vehicle's longitudinal members, through metal-to-rubber bonded mountings. Bushes which are pressed into the crossbeam are used at the front, and mountings which are bolted to the crossbeam are used at the rear.

Wishbone Assemblies

Both upper and lower wishbone assemblies are attached to the crossbeam by fulcrum bolts. The upper wishbone is a single-piece steel forging, which is fitted with a press-fit ball joint, and two slipflex bushes to each arm. A single fulcrum bolt attaches the upper wishbone to the crossbeam. Shims installed with the upper fulcrum bolt are used to adjust the caster setting.

The wide-base lower wishbone comprises two steel forged arms bolted together. The front wishbone arm is tapped to accept the two bolts which secure the two wishbone arms together. Additionally the two bolts also secure the shock absorber mounting brackets to the wishbone. Each lower wishbone arm is fitted with a metal-to-rubber bonded fulcrum bush which is attached to the crossbeam by an independent fulcrum bolt. The rear wishbone arm has a press fit ball joint installed.

The camber setting is adjusted by rotating the lower-wishbone rear fulcrum bolt, which has an eccentric shaft. However, in some markets the eccentric bolt is not fitted and the original fulcrum bolt has to be substituted with an eccentric bolt to enable adjustment. The eccentric bolt is supplied by Jaguar Cars Ltd.

Stabilizer Bar

The stabilizer bar, is attached to the crossbeam in two positions by rubber bushes and clamps. The outer ends of the stabilizer bar are attached to links which are connected the lower wishbones. The stabilizer bar provides the required stiffness to prevent excessive body roll and fore-and-aft motion.

Vertical link

The vertical link swivels on the upper and lower wishbones via the ball joints, and carries the

- hub,
- cartridge wheel bearing - which is greased for life, has integral seals, and is non-adjustable,
- hub rotor nut (hub nut and ABS rotor combined),
- wheel speed sensor,
- brake caliper,
- and brake disc and shield.

The position of the vertical link is determined by the movement of the steering rack, which is connected to the vertical link's integral steering arm by the tie-rod-end.

Shock absorber and spring assembly

The shock absorber and spring is a coaxial assembly, installed between the lower wishbone and vehicle body. The top spring mounting is attached to the vehicle's inner fender and the shock absorber is attached to a bracket on the lower wishbone. The spring is compressed between the upper mounting and the lower spring pan which is held in position by a circlip attached to the shock absorber.

Springs come in various ratings depending on the vehicle's suspension specification The suspension specification also determines the number of packers fitted between the lower spring pan and the spring.

Shock absorbers and CATS (adaptive damping): see section 204-03 Description and Operation.

Enhanced Handling Pack

An optional enhanced handling pack, which can be either factory or dealer installed, is available for XK coupe vehicles fitted with adaptive damping only. If the handling pack is installed the high performance Brembo brakes and special wheels must also be installed, refer to the Description and Operation sections in 206-03 and 204-04 for information. The handling packs consist of special:

- Coil springs.
- Shock absorbers.
- Adaptive Damping Control Module (ADCM)
- Increased diameter, front stabilizer bar.
- Reduced diameter, rear stabilizer bar.
- Steering rack.
- Power steering control module.

Front Suspension - Ball Joint

Removal and Installation

Special Tool(s)	
E36462	Ball Joint Taper Separator 204-192 (JD 219)
E36426	Upper wishbone ball joint installer. 204-199 (JD239)
E36427	Upper wishbone ball joint remover. 204-200 (JD240)

Removal

• CAUTIONS:

Replacement of nuts and bolts: Various thread-locking devices are used on nuts and bolts throughout the vehicle. These devices restrict the number of times a nut or bolt can be used. See section 100-00 for information.

The ball joint must be returned for warranty purposes, care must therefore be exercised to avoid damaging it during removal. Any damage incurred during removal must be noted and recorded.

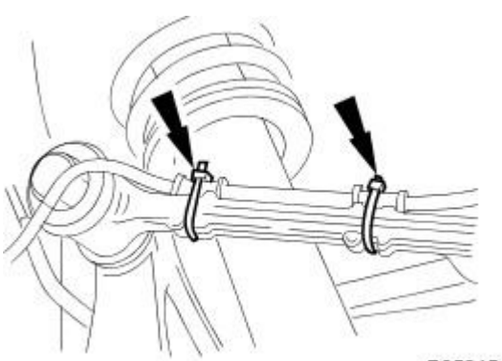
E35045

1. Raise front of vehicle and support on stands.
2. Remove appropriate road wheel. Refer to Section 204-04.
3. Position wheel speed sensor harness for access.
   - Remove and discard tie straps securing wheel speed sensor harness to wishbone.
   - Position harness clear of wishbone.

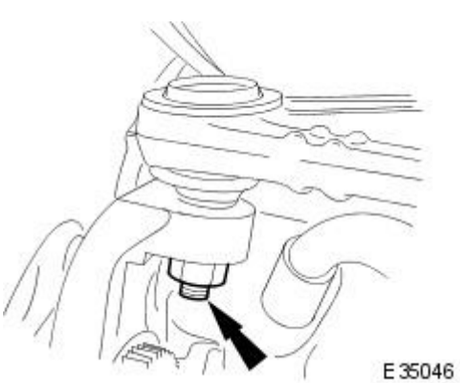
E35046

4. Remove nut securing upper wishbone ball joint to vertical link.
5. Remove tool from ball joint.

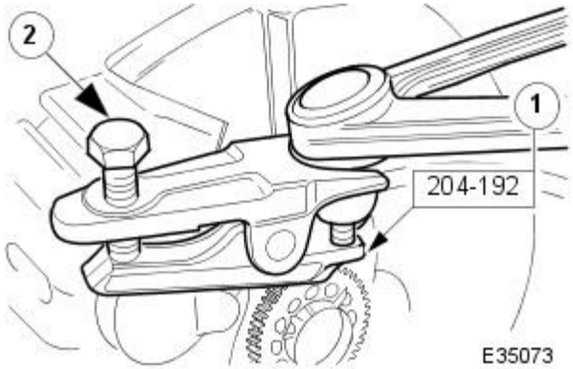

6. CAUTION: Do not use special tool 211-098 in the following procedure as this will damage the ball joint gaiter.

Release wishbone ball joint from vertical link.

1. Install special tool 204-192 on upper wishbone ball joint.
2. Tighten bolt of special tool to release ball joint taper from vertical link.

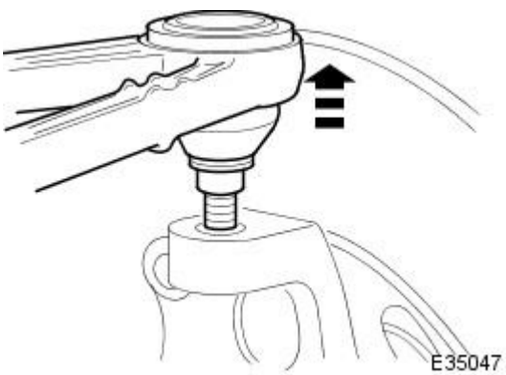

7. Raise upper wishbone to release ball joint pin from vertical link.

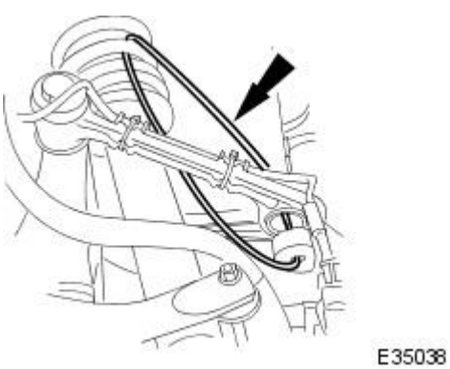

8. To prevent damage to lower ball joint, secure vertical link to road spring using strong wire.

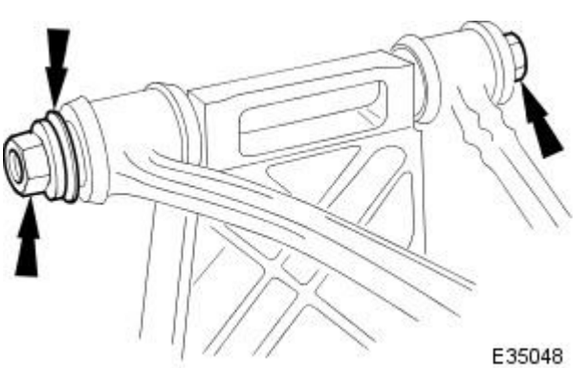

9. Remove upper wishbone fulcrum nut, washer and shaft.

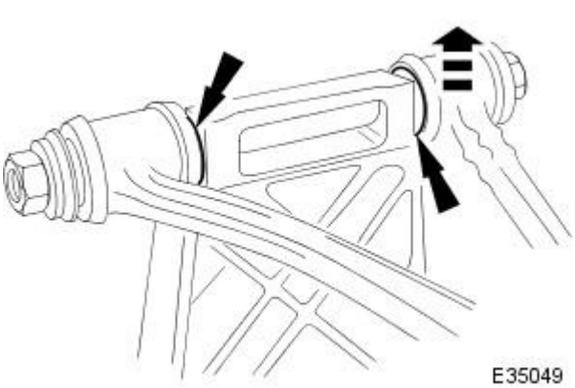

10. CAUTION: When removing wishbone from suspension beam, retain and note positions of castor adjustment shims.

Remove upper wishbone from suspension beam and retain adjustment shims.

11. Position wishbone in a vise.

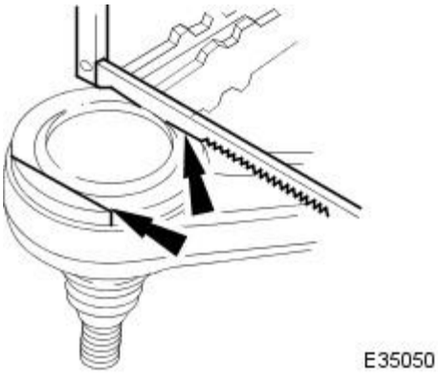

12. Using a hacksaw, partially cut through two diametrically opposite segments of ball joint flange.

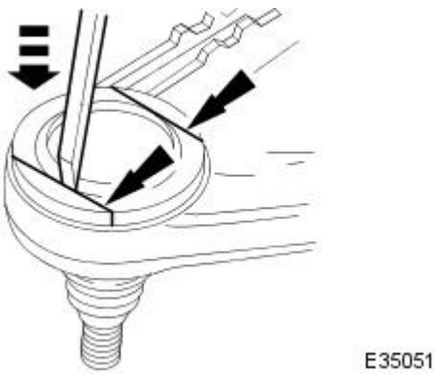

13. Carefully chisel through and remove the two ball joint flange segments to permit installation between press bed plates.

14. Remove wishbone from vise and thoroughly clean to remove swarf and road deposits.

15. For warranty purposes, paint positions of spring clip ends on ball joint housing and rubber gaiter.

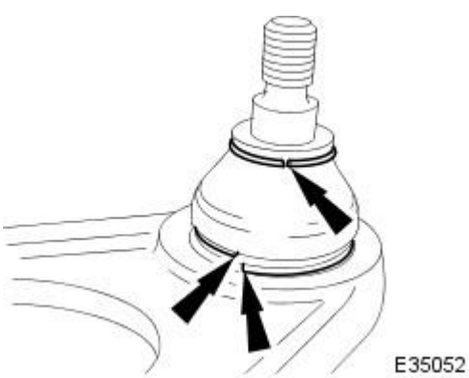

16. NOTE: Any gaiter damage incurred during removal must be recorded for warranty purposes.

Remove retaining clips and gaiter.

- Exercising care to avoid splitting or otherwise damaging gaiter, remove retaining clips.
- Remove gaiter and retain for warranty purposes.

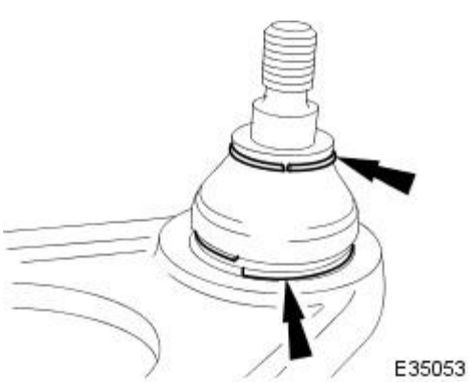

17. Invert wishbone and position on press with ball joint flange between press bed plates.

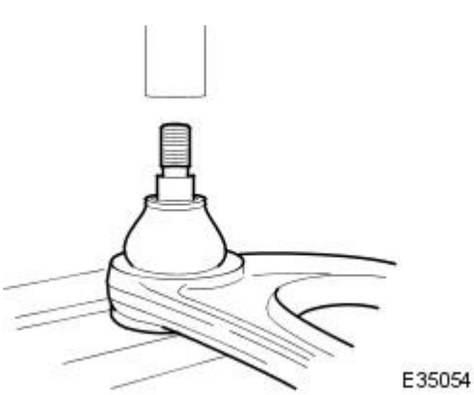

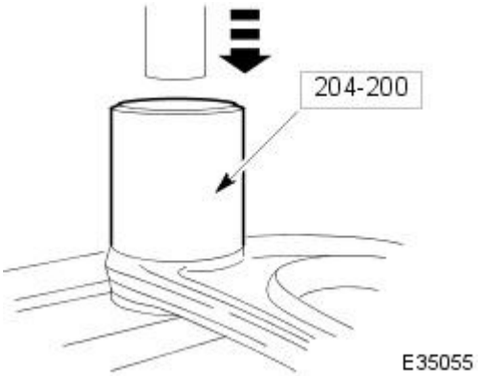

18. Install special tool 204-200 on ball joint and operate press to release joint from wishbone.

19. Remove special tool from ball joint.

20. Remove ball joint and wishbone from press.

21. Ensuring that their relative positions are clearly marked, place ball joint, rubber gaiter and retaining clip in a clean plastic bag and return for warranty purposes.

22. Thoroughly clean wishbone paying particular attention to ball joint and pivot bolt locations.

Installation

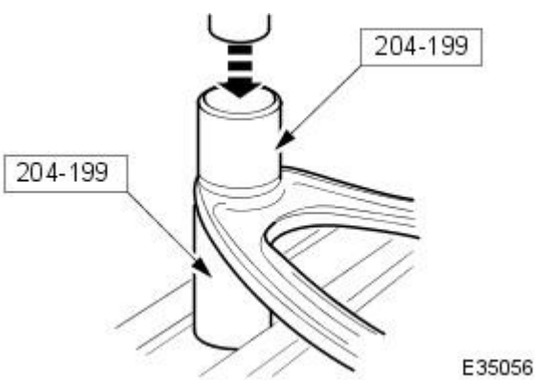

1. Install ball joint in wishbone.

- Position support of special tool 204-199 on press bed and place wishbone on tool.
- Using ball joint plastic cover to align, position mandrel of special tool 204-199 on ball joint
- Align assembly with press ram and operate press to fully seat ball joint in wishbone.

2. Remove tools from ball joint.

3. Remove wishbone from press.

4. Remove and discard plastic cover from ball joint.

5. Installing castor shims in positions noted during removal, assemble wishbone to suspension beam.

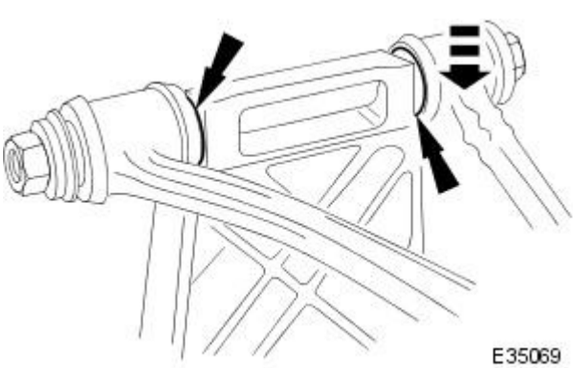

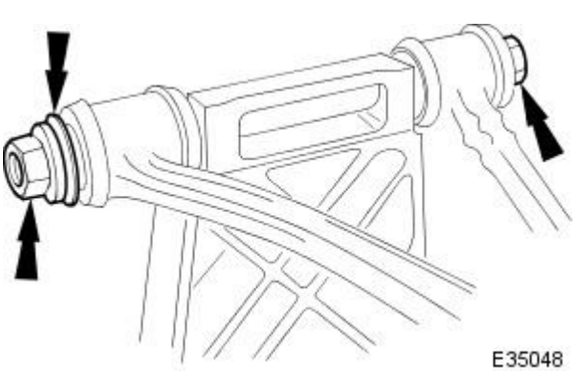

6. Install upper wishbone.

- Install fulcrum shaft thread facing rearward.
- Install washer and nut and tighten nut to 98-132Nm.

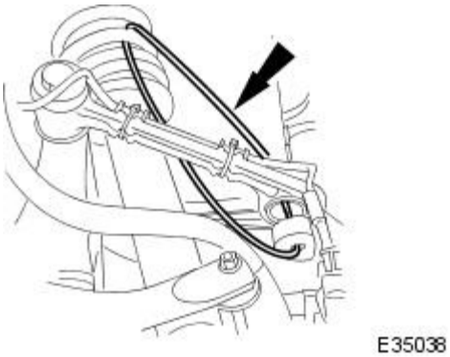

7. Remove wire/string temporarily securing vertical link to damper.

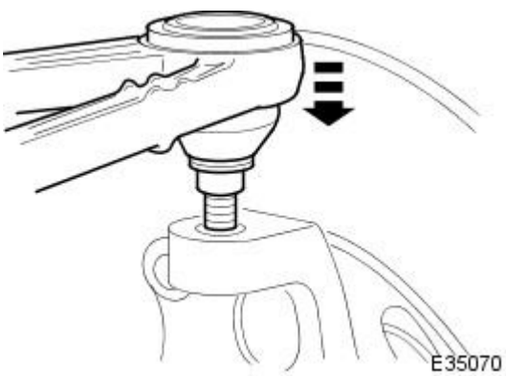

8. Position wishbone to facilitate engagement of ball joint taper pin in vertical link.

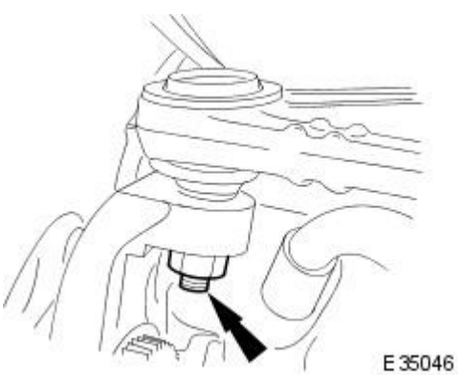

9. Install nut securing ball joint to vertical link and tighten nut to 60-80Nm.

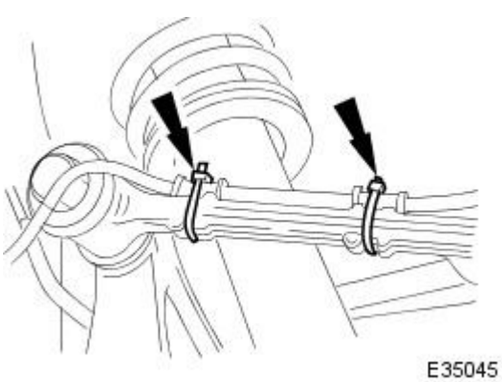

10. Position wheel speed sensor harness on wishbone and secure with new tie straps.

11. Install road wheel. Refer to Section 204-04.

12. Raise front of vehicle remove stands and lower vehicle.

13. Check and as necessary adjust front wheel alignment. Refer to 57.65.01.

Front Suspension - Front Lower Arm and Rear Lower Arm Assembly

Removal and Installation

Special Tool(s)	
E36462	Ball Joint Taper Separator 204-192 (JD 219)
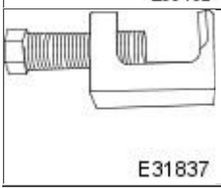 E31837	Ball joint splitter 204-293

Removal

CAUTION: Replacement of nuts and bolts: Various thread-locking devices are used on nuts and bolts throughout the vehicle. These devices restrict the number of times a nut or bolt can be used. See section 100-00 for information.

1. Raise front of vehicle and support on stands. Refer to Section 100-02
2. Remove appropriate front road wheel. Refer to Section 204-04.
3. Remove nut and bolt securing stabilizer bar link-rod to lower wishbone.

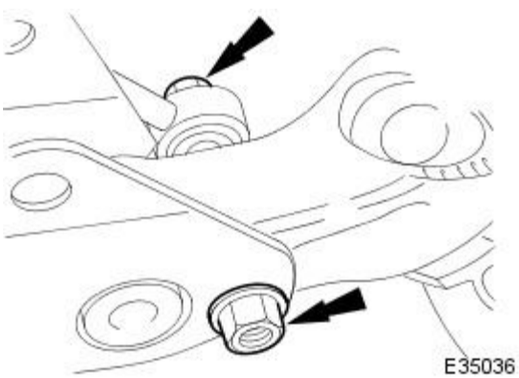
E35036

4. To prevent damage to upper ball joint, secure vertical link to road spring using strong wire.

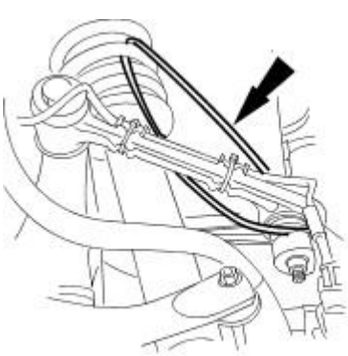
E35037

5. Remove nut securing lower ball joint to vertical link.

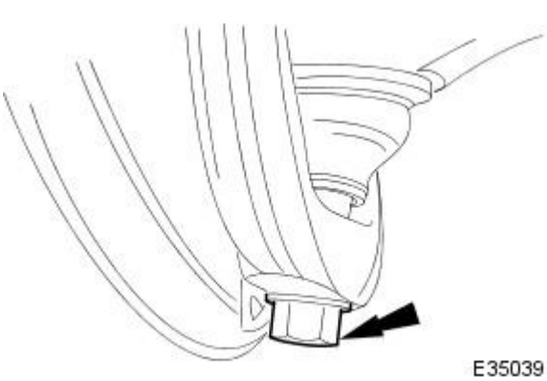
E35039

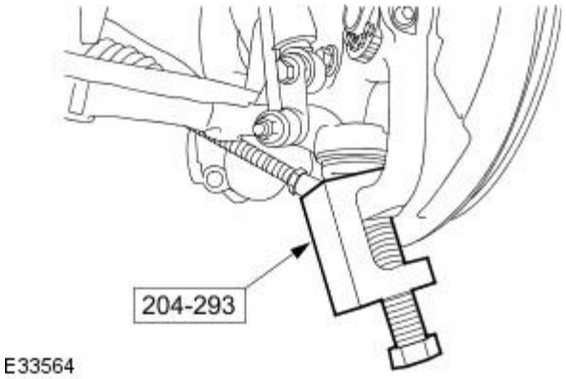

6. CAUTION: Do not use special tool 211-098 in the following procedure as this will damage the ball joint gaiter.

Release lower ball joint from vertical link.

1. Install special tool 204-293 on ball joint.
2. Ensuring that rubber gaiter is not trapped, tighten tool bolt until ball joint taper pin is released from vertical link.

7. Remove special tool from ball joint.

8. Remove shock absorber lower nut and bolt.

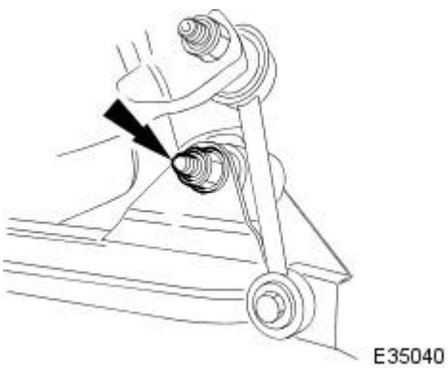

9. Remove nut and bolt securing lower wishbone front arm to cross-beam.

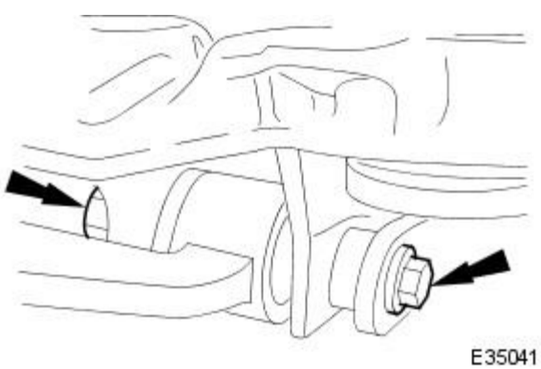

10. Remove nut and bolt securing lower wishbone rear arm to cross-beam

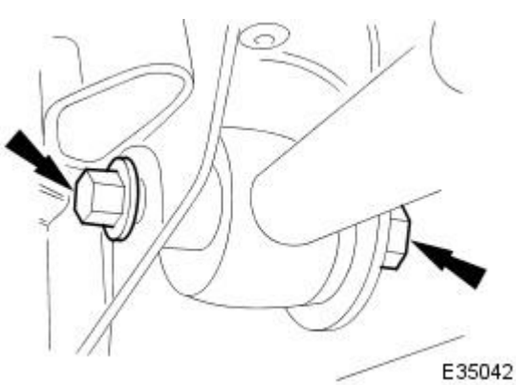

11. Remove lower wishbone/ball joint assembly from cross-beam.

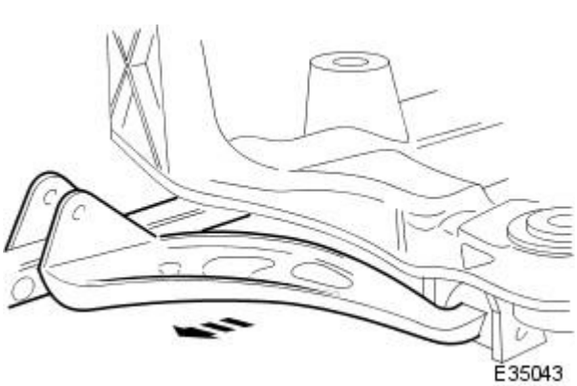

12. Thoroughly clean wishbone and ball joint. assembly
13. Check that ball joint gaiter is free from cuts or abrasions.

Installation

1. Position lower wishbone on suspension cross-beam and vertical link.

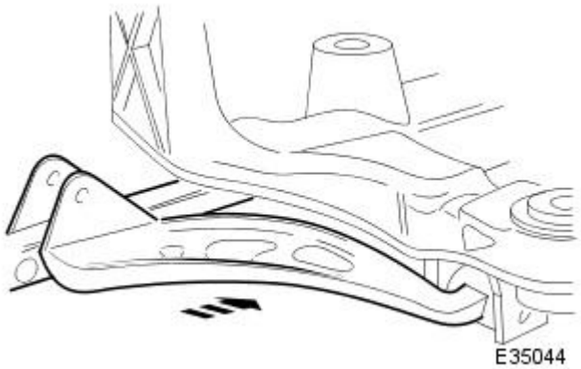

2. Install but do not tighten wishbone rear arm to cross beam pivot nut and bolt.

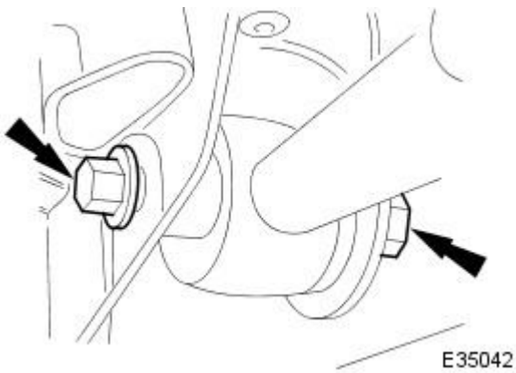

3. Install but do not tighten wishbone front arm to cross beam pivot nut and bolt.

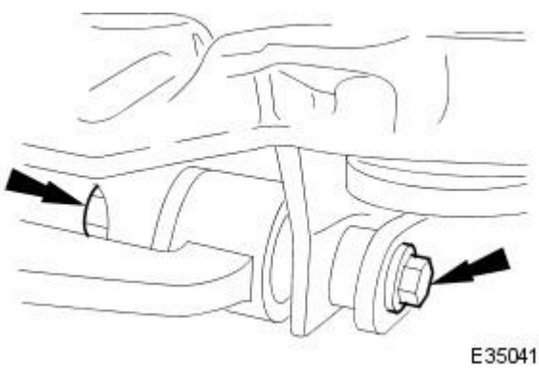

4. Install nut securing lower ball joint to vertical link and tighten to 60-80Nm.

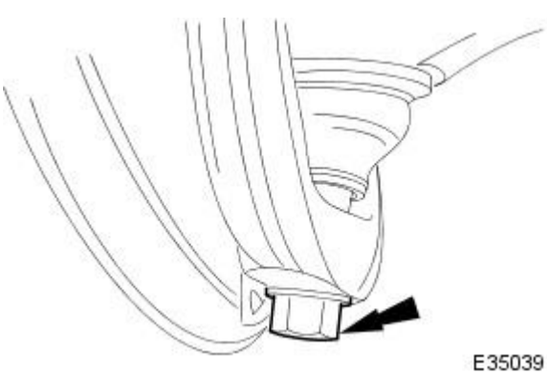

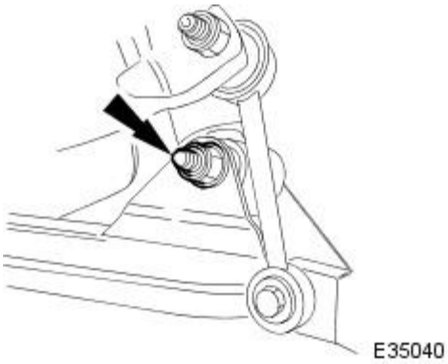

5. Align lower end of shock absorber with wishbone, install nut and bolt and tighten to 60-80Nm.

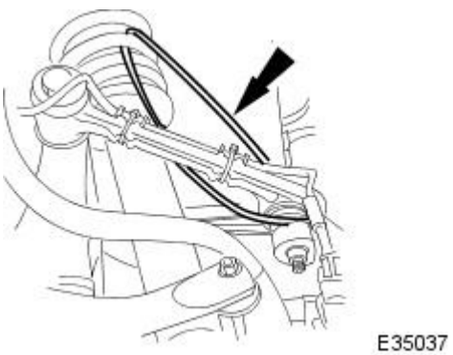

6. Remove wire temporarily securing vertical link to road spring.

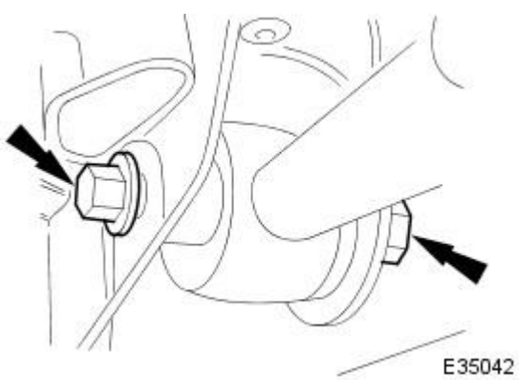

7. Tighten wishbone rear arm pivot nut and bolt to 113-153Nm.

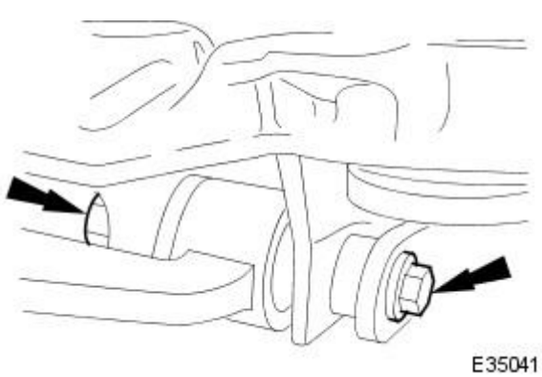

8. Tighten wishbone front arm pivot nut and bolt to 113-153Nm.

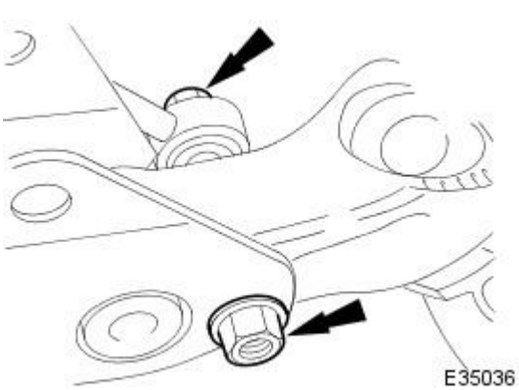

9. Align stabilizer bar link rod with lower wishbone, install nut and bolt and tighten to 39-55Nm.

10. Install road wheel. Refer to Section 204-04.

11. Raise vehicle, remove stands and lower vehicle. Refer to Section

Front Suspension - Front Stabilizer Bar

Removal and Installation

Special Tool(s)	
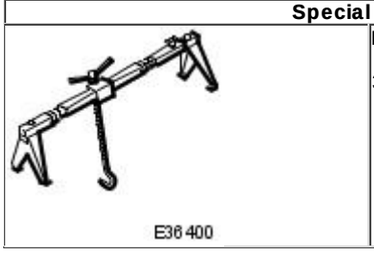 E36400	Engine Support Beam 303-021 (MS 53D)

Materials

Name	Specification
Rubber Suspension Insulator Lube	Castrol NTR

Removal

1. CAUTION: Replacement of nuts and bolts: Various thread-locking devices are used on nuts and bolts throughout the vehicle. These devices restrict the number of times a nut or bolt can be used. See section 100-00 for information.

Position vehicle on a four-post lift.

2. Open engine compartment to the service position.

3. Fit paintwork protection covers to fenders.

4. Disconnect battery ground cable. Refer to section 414-01.

5. Remove both engine covers.

- Release retaining pegs.
- Remove engine covers.

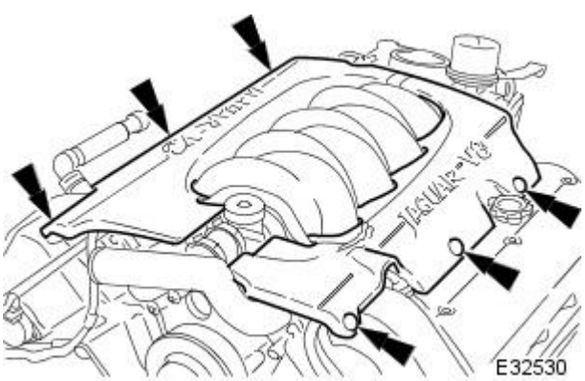

6. Support weight of engine.

1. Position special tool in RH and LH fender channels and tighten beam fixings.
2. Engage hooks into engine front lifting eyes.
3. Tighten hook adjustment nuts until weight of engine is supported.

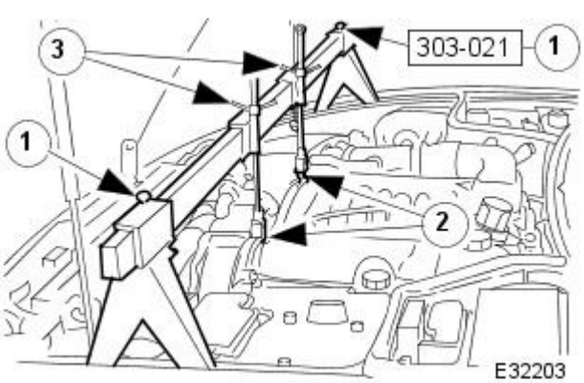

7. Raise vehicle on a four-post ramp.

8. Remove generator front cooling duct.

- Remove bolt.
- Move duct rearwards to release tang from undertray.
- Release front duct from rear vertical duct.

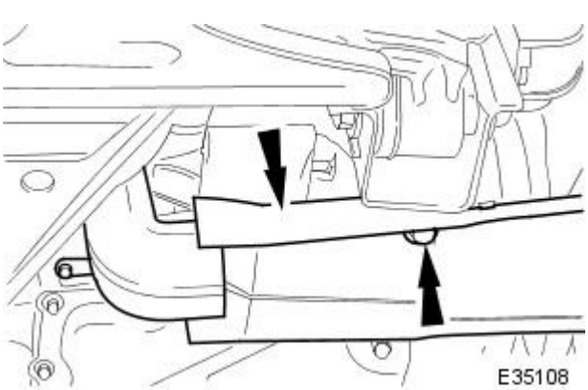

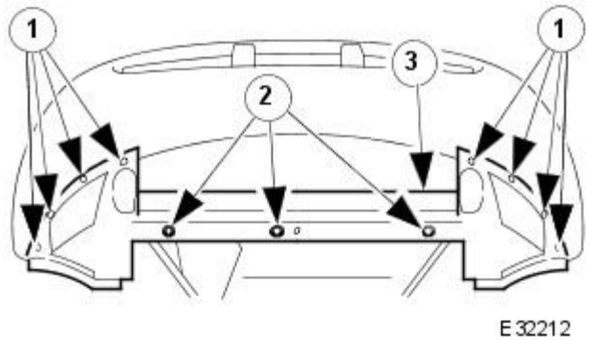

9. Remove undertray.

1. Remove and discard eight scrivets.
2. Remove screws.
3. Remove undertray.

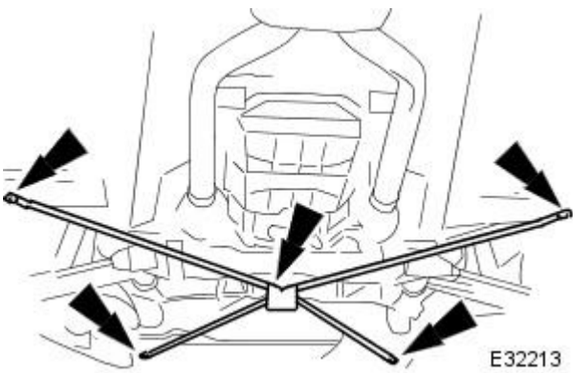

10. Remove cruciform strut (convertible vehicles only).

- Remove four bolts.
- Remove cruciform strut.

11. Raise front of vehicle and support on stands. Refer to section 100-02.

12. Remove front wheels. Refer to section 204-04.

13. Release both front wheel-arch liners to access stabilizer-bar brackets.

- Remove screw.
- Remove nut.
- Repeat procedure to release opposite-side wheel-arch liner.

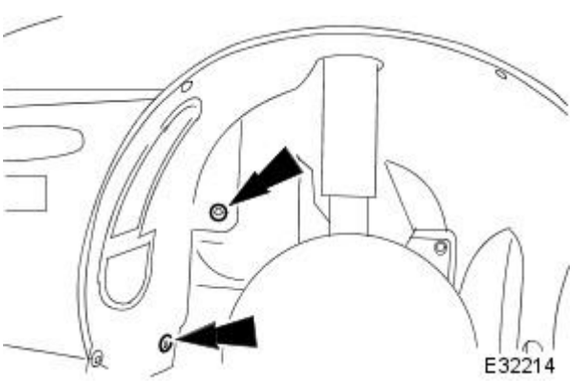

14. CAUTION: Place a wooden block between the jack and crossbeam, to prevent damage to the crossbeam.

Using a suitable jack, support the weight of the front crossbeam.

15. Remove crossbeam front mounting-brackets.

1. Remove front bolts.
2. Remove rear bolt.
3. Remove mounting bracket.

- Repeat procedure to remove opposite-side mounting bracket.

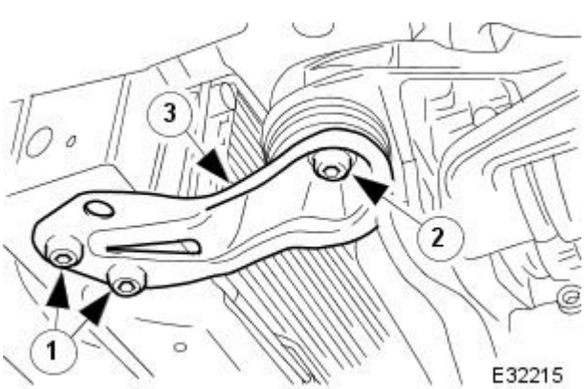

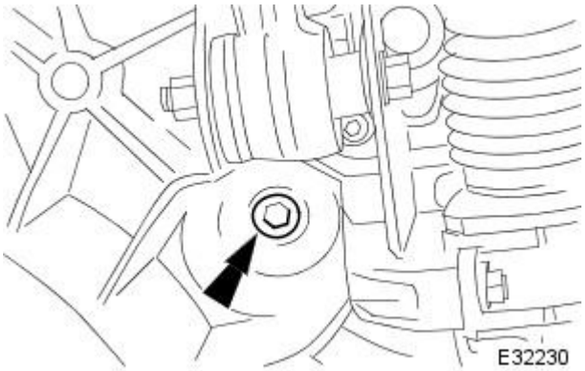

16. Release both front engine mountings from crossbeam.

- Remove bolt.
- Repeat procedure to release opposite-side engine mounting.

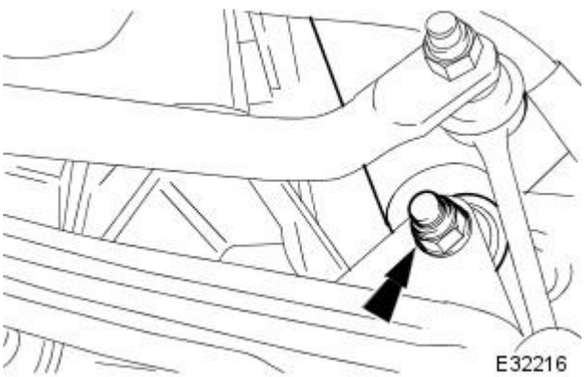

17. Release both front shock-absorbers from lower mountings.

1. Remove nut and bolt.
2. Repeat procedure to release opposite-side shock absorber.

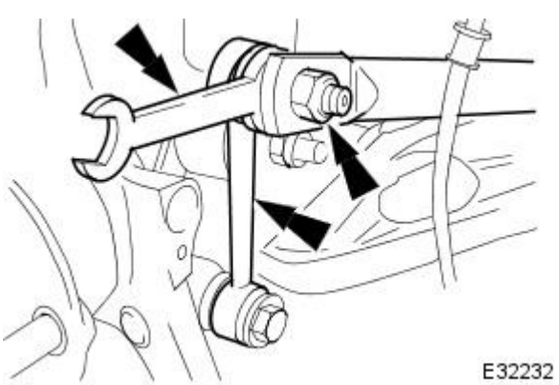

18. Release both links from front stabilizer bar.

- Use an open-ended spanner on the ball-pin flats to prevent the dust cover from twisting.
- Remove nut.
- Release link.
- Repeat procedure to release opposite-side link.

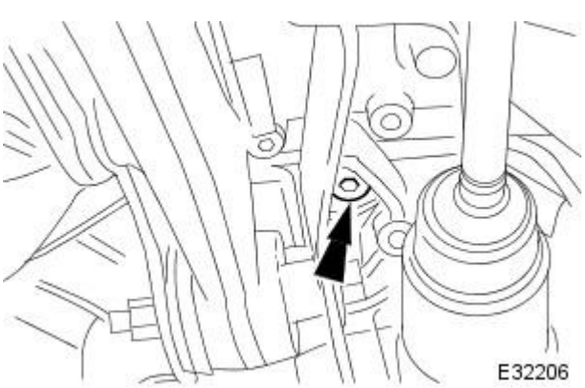

19. Release front crossbeam, rear-mountings from vehicle's body.

- Remove mounting center bolt.
- Repeat procedure to release opposite-side mounting.

20. Lower crossbeam sufficiently, to access stabilizer bar mounting-brackets.

21. Remove stabilizer bar mounting-brackets and bushes.

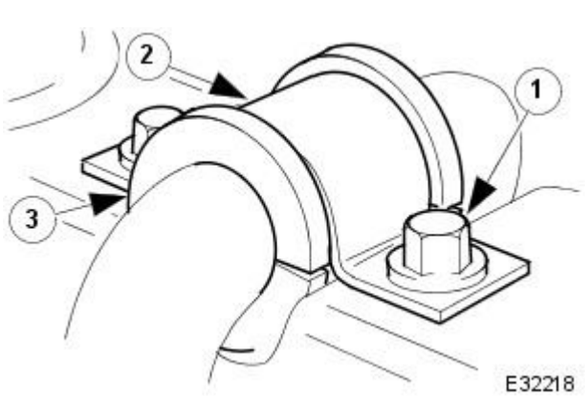

1. Remove bolts.
2. Remove bracket.
3. Remove bush.

- Repeat procedure to remove opposite-side mounting bracket and bush.

22. Remove stabilizer bar from vehicle.

23. Clean relevant parts.

Installation

1. Position stabilizer bar to vehicle.

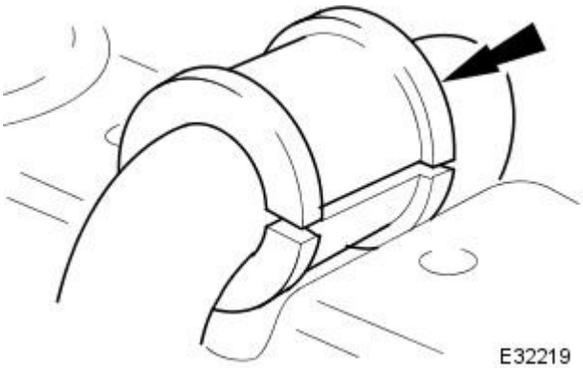

2. CAUTION: Make sure the Casrol NTR grease is only applied to the inner surface of the mounting bush. Failure to follow this instruction may affect the retention of the bush in the retaining bracket.

• NOTE: Make sure bushes are seated correctly in the stabilizer bar's retaining bosses and crossbeam recesses.

Fit both mounting bushes to stabilizer bar.

- Apply a thin film of Castro NTR grease to the inner surface of the bush.
- Fit bush so that split is facing towards rear of vehicle.
- Repeat procedure to fit opposite-side bush.

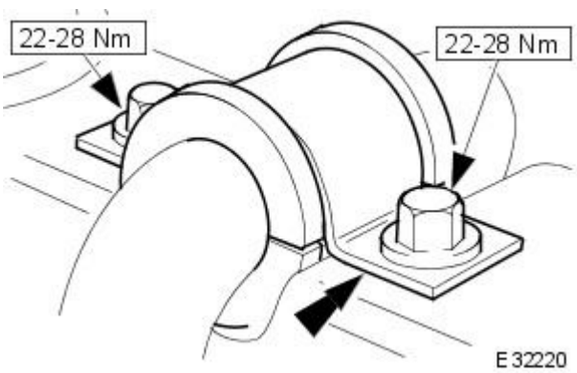

3. Fit both stabilizer bar mounting-brackets.

- Position bracket.
- Fit and tighten bolts.
- Repeat procedure to fit opposite-side bracket.

4. Raise crossbeam.

5. Secure crossbeam rear mountings to vehicle's body.

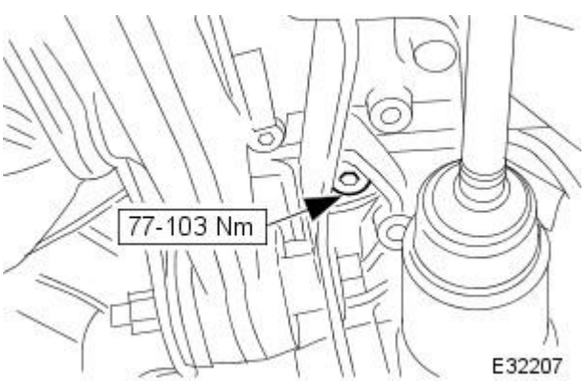

- Fit and tighten bolt.
- Repeat procedure to secure opposite-side mounting.

6. Secure links to stabilizer bar.

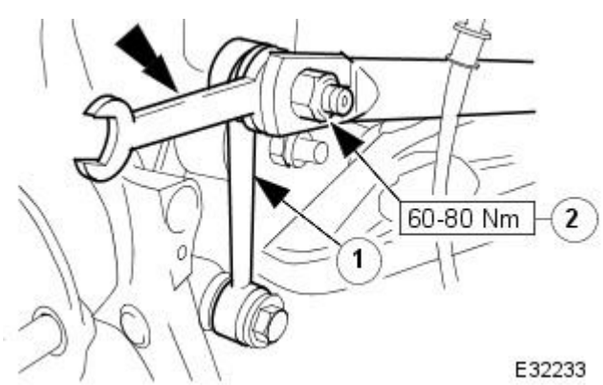

1. Position link to stabilizer bar.

- Use an open-ended spanner on the ball-pin flats to prevent the dust cover from twisting.

2. Fit and tighten nut.

- Repeat procedure to secure opposite-side link.

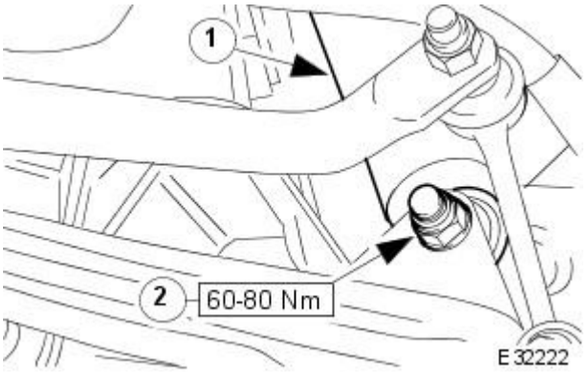

7. Secure shock absorbers to lower mountings.

1. Align shock absorber to lower-mounting and fit bolt.
2. Fit and tighten nut.

- Repeat procedure to secure opposite-side shock absorber.

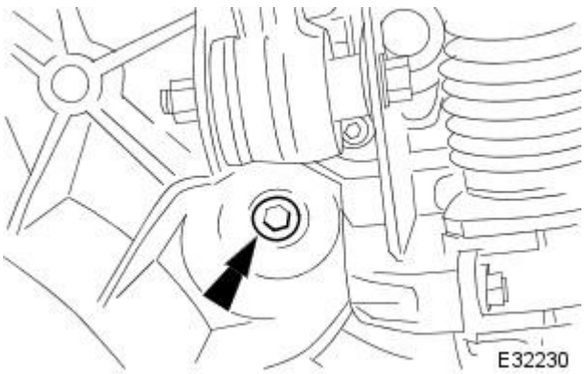

8. Fit front engine mounting bolts, but DO NOT tighten at this stage.

- Repeat procedure on opposite-side mounting.

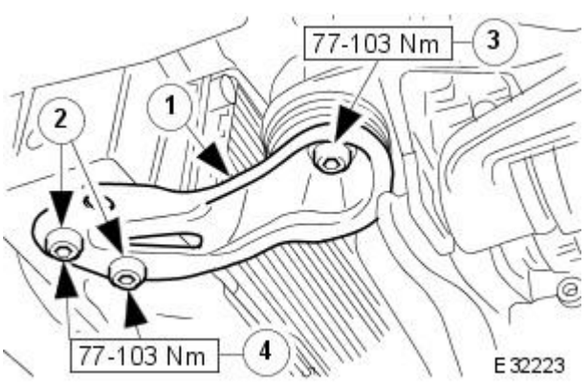

9. Fit both front mounting-brackets to crossbeam.

1. Align bracket.
2. Fit front bolts: do not tighten bolts at this stage.
3. Fit and tighten rear bolt.
4. Tighten front bolts.

- Repeat procedure to fit opposite-side mounting bracket.

10. Lower and remove the jack from beneath the crossbeam.

11. Secure both wheel-arch liners.

- Fit and tighten screw.
- Fit and tighten nut.
- Repeat procedure to secure opposite-side wheel arch liner.

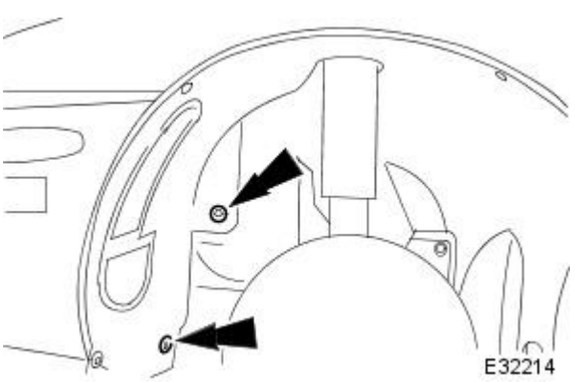

12. Fit cruciform strut (convertible models only).

- Position cruciform strut.
- Fit and tighten bolts.

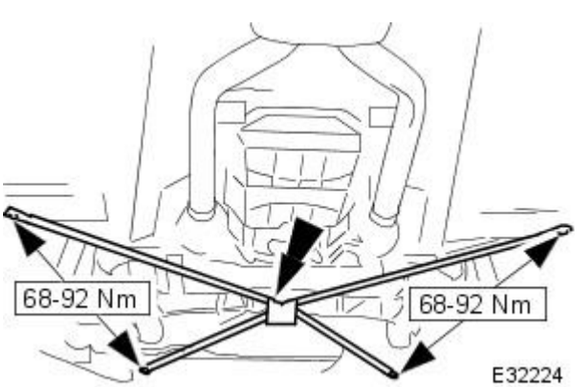

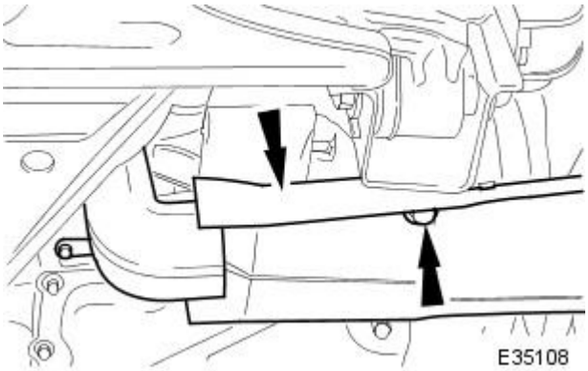

13. Fit generator cooling duct deflector.

- Position deflector over rear vertical duct.
- Slide deflector forward to engage center tang over undertray.
- Fit bolt and tighten to 17-23Nm.

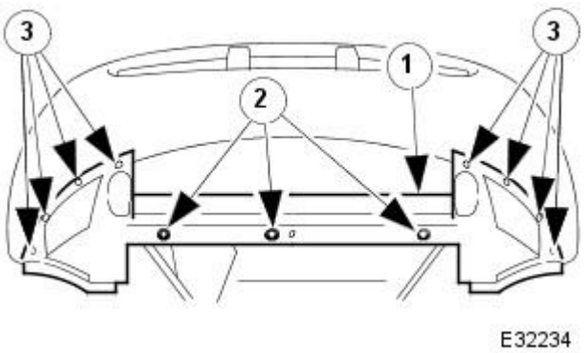

14. Fit undertray.

1. Position undertray.
2. Fit screws.
3. Fit new scrivets.

15. Fit wheels. Refer to section 204-04.

16. Remove stands and lower front of vehicle.

17. Lower four-post lift.

18. Release weight of engine.

1. Undo hook adjustment nuts.
2. Remove hooks from lifting eyes.
3. Remove special tool.

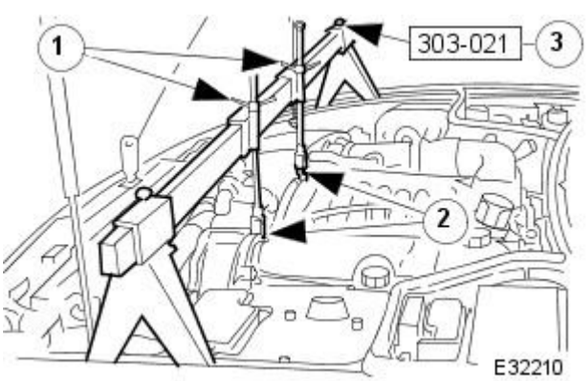

19. Secure front engine mountings to crossbeam.

- Tighten bolt.
- Repeat procedure to secure opposite-side mounting.

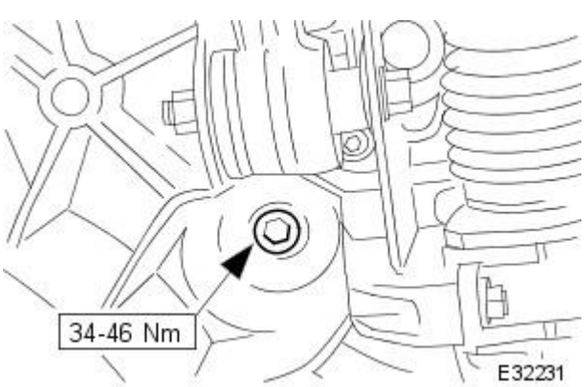

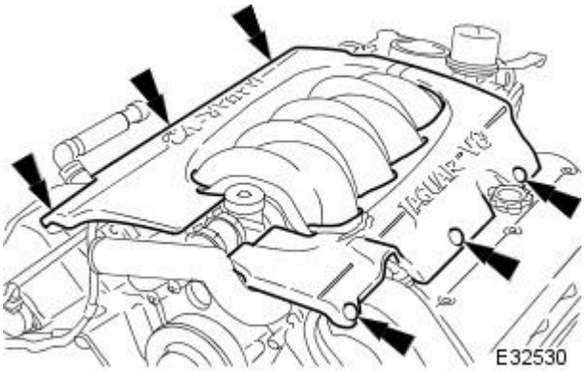

20. Fit engine covers.

- Position covers to engine.
- Secure covers with retaining pegs.

21. Connect battery ground cable. Refer to section 414-01, Battery Reconnection Procedure.

22. Remove paintwork protection covers.

Front Suspension - Front Stabilizer Bar Bushing

Removal and Installation

Materials

Name	Specification
Rubber Suspension Insulator Lube	Castrol NTR

Removal

1. CAUTION: Replacement of nuts and bolts: Various thread-locking devices are used on nuts and bolts throughout the vehicle. These devices restrict the number of times a nut or bolt can be used. See section 100-00 for information.

Open engine compartment and fit paintwork protection covers to fenders.

2. Raise front of vehicle and support on stands. Refer to section 100-02.

3. Remove front wheels. Refer to section 204-04.

4. Release both front wheel-arch liners to access stabilizer-bar brackets.

- Remove screw.
- Remove nut.
- Repeat procedure to release opposite-side wheel-arch liner.

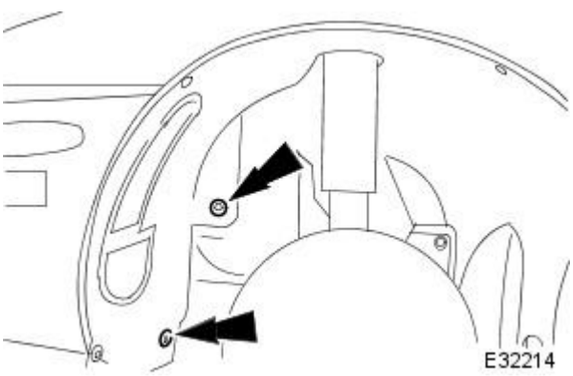

5. Remove generator cooling duct.

- Remove bolts.
- Remove cooling duct.

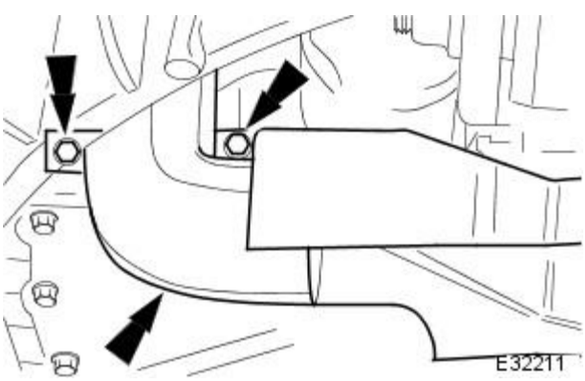

6. Release both links from front stabilizer bar.

- Use an open-ended spanner on the ball-pin flats to prevent the dust cover from twisting.
- Remove nut.
- Release link.
- Repeat procedure to release opposite-side link.

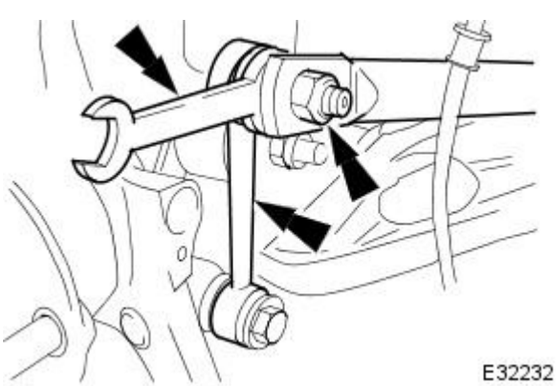

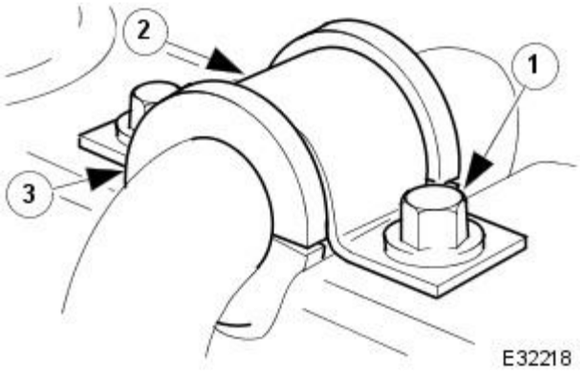

7. Remove stabilizer bar mounting-brackets and bushes.

1. Remove bolts.
2. Remove bracket.
3. Remove bush.

- Repeat procedure to remove opposite-side mounting-bracket and bush.

8. Clean relevant parts.

Installation

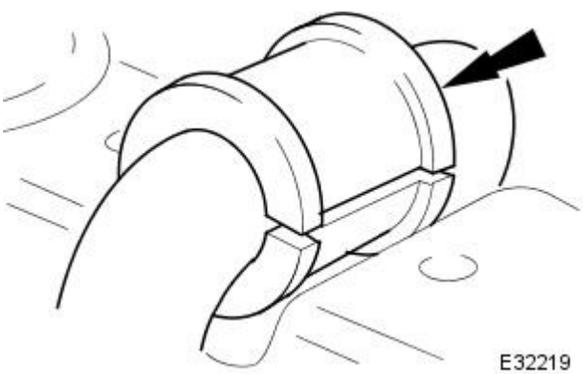

1. CAUTION: Make sure the Castrol NTR grease is only applied to the inner surface of the mounting bush. Failure to follow this instruction may affect the retention of the bush in the retaining bracket.

• NOTE: Make sure bushes are seated correctly in the stabilizer bar's retaining bosses and crossbeam recesses.

Fit both mounting bushes to stabilizer bar.

- Apply a thin film of Castrol NTR grease to the inner surface of the bush.
- Fit bush so that split is facing towards rear of vehicle.
- Repeat procedure to fit opposite-side bush.

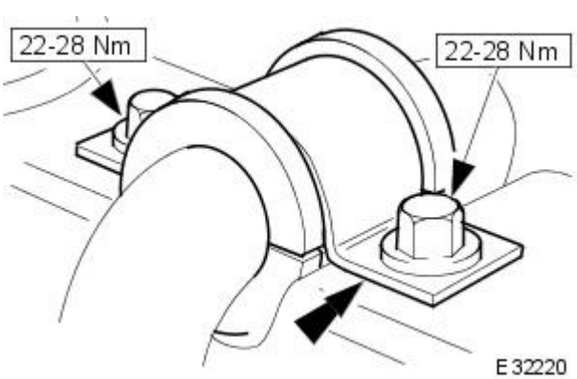

2. Fit both stabilizer bar mounting-brackets.

- Position bracket.
- Fit and tighten bolts.
- Repeat procedure to fit opposite-side bracket.

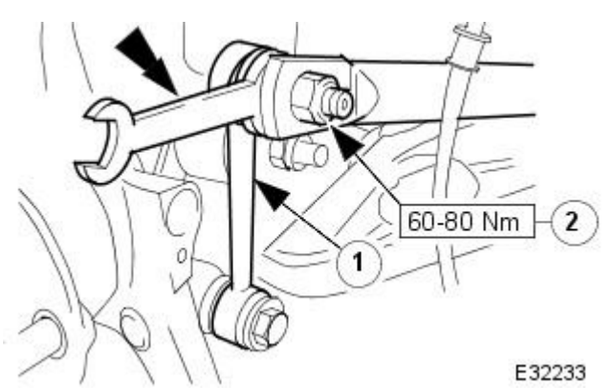

3. Secure links to stabilizer bar.

1. Position link to stabilizer bar.

- Use an open-ended spanner on the ball-pin flats to prevent the dust cover from twisting.

2. Fit and tighten nut.

- Repeat procedure to secure opposite-side link.

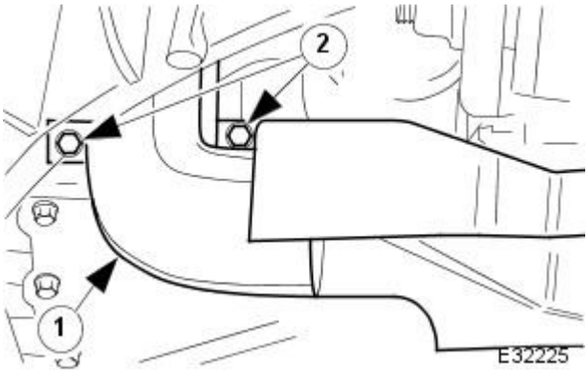

4. Fit generator cooling duct.

1. Align cooling duct.
2. Fit and tighten bolts.

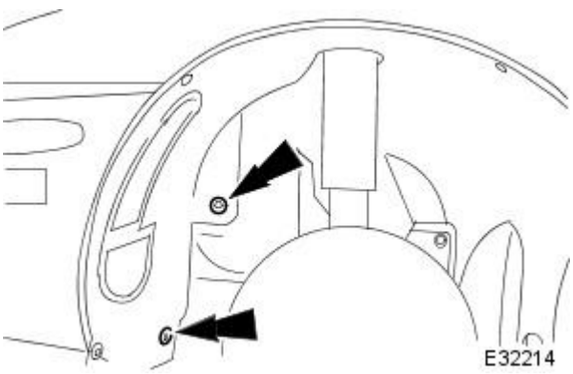

5. Secure both wheel-arch liners.

- Fit and tighten screw.
- Fit and tighten nut.
- Repeat procedure to secure opposite-side wheel arch liner.

6. Fit wheels. Refer to section 204-04.

7. Remove stands and lower vehicle.

8. Remove paintwork protection covers.

Front Suspension - Front Stabilizer Bar Link

Removal and Installation

Removal

1. CAUTION: Replacement of nuts and bolts: Various thread-locking devices are used on nuts and bolts throughout the vehicle. These devices restrict the number of times a nut or bolt can be used. See section 100-00 for information.

Open engine compartment and fit paintwork protection covers to fenders.

2. Raise front of vehicle and support on stands. Refer to section 100-02.

3. Remove front wheel. Refer to section 204-04.

4. Remove link.

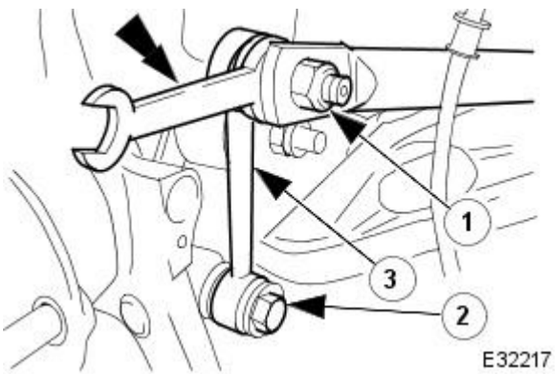

- Use an open-ended spanner on the ball-pin flats to prevent the dust cover from twisting.
  1. Remove nut.
  2. Remove nut and bolt.
  3. Remove link from stabilizer bar.

5. Clean relevant parts.

Installation

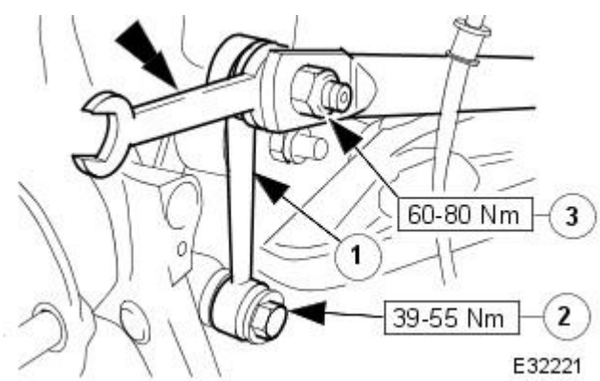

1. Fit link .

  1. Align link to lower wishbone and fit bolt.
  2. Fit and tighten nut.

- Use an open-ended spanner on the ball-pin flats to prevent the dust cover from twisting.
  3. Fit and tighten nut.

2. Fit front wheel. Refer to section 204-04.

3. Remove stands and lower vehicle.

4. Remove paintwork protection covers.

Front Suspension - Front Wheel Bearing

Removal and Installation

Special Tool(s)	
E36390	Hub Remover 204-193 (JD 224)
E36391	Hub Removal Collets 204-194 (JD 225)
E36410	Hub Holding Tool 204-195 (JD 227)
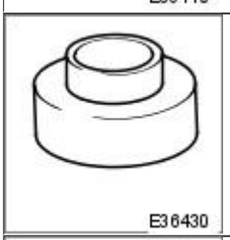 E36430	Hub Replacer 204-196 (JD 236)
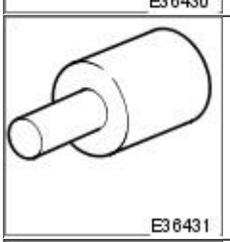 E36431	Wheel Bearing Remover 204-197 (JD 237)
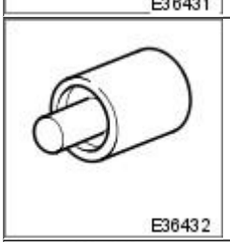 E36432	Wheel Bearing Replacer 204-198 (JD 238)
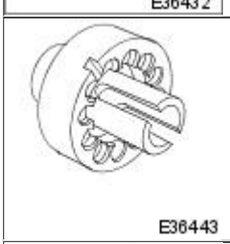 E36443	ABS Rotor Nut Socket 206-066A
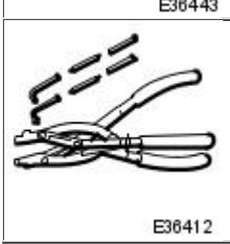 E36412	Circlip Pliers 18G 1004

Removal

1. CAUTION: Replacement of nuts and bolts: Various thread-locking devices are used on nuts and bolts throughout the vehicle. These devices restrict the number of times a nut or bolt can be used. See section 100-00 for information.

Remove vertical link and hub assembly. Refer to operation 60.25.38.90.

2. Remove brake-disc shield from vertical link.

1. Remove screws.
2. Remove disc shield.

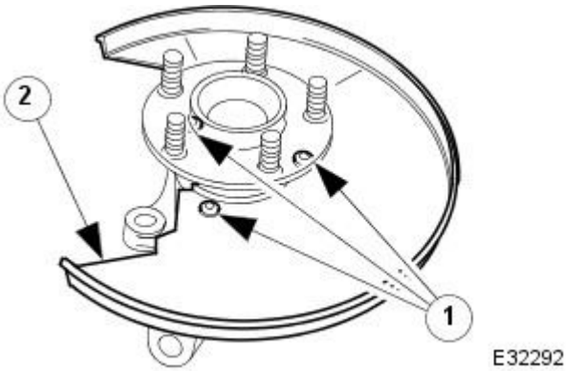

3. Using special tool, secure vertical link and hub assembly in a vice.

- Secure special tool in a vice.
- Position hub in tool.
- Fit and tighten wheel nuts.

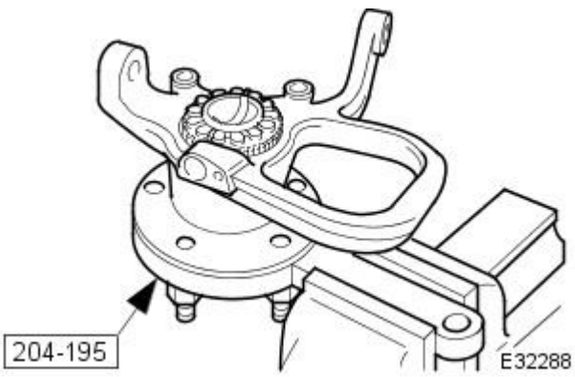

4. Remove rotor nut spring-clip.

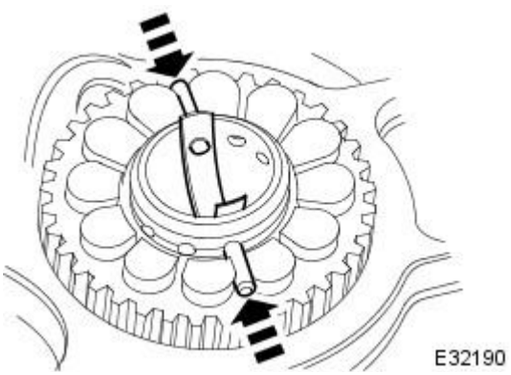

5. Remove rotor nut.

- Using special tool remove rotor nut.

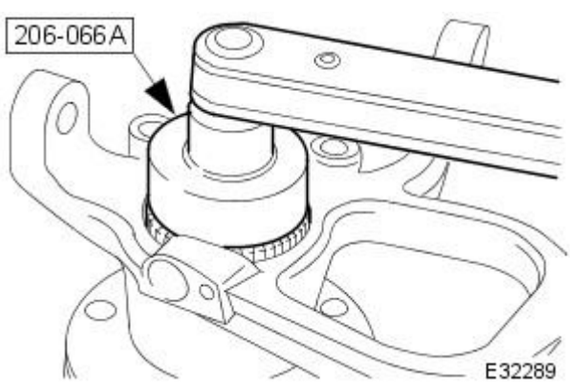

6. Remove vertical link and hub assembly from special tool.

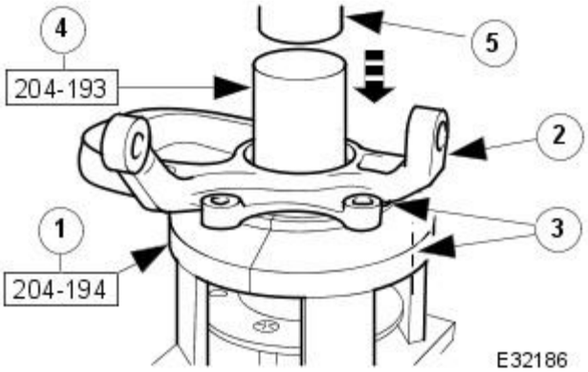

7. Using a hydraulic press, remove hub from vertical link.

1. Place special tool on press bed.
2. Position vertical link and hub assembly into tool collets.
3. Make sure one of the disc shield screw-bosses is in the center of one of the tool collets.
4. Position special tool on top of hub.
5. Operate press to remove hub from vertical link.

8. Remove and discard the inboard circlip from the vertical link.

9. Remove and discard outboard circlip from the vertical link.

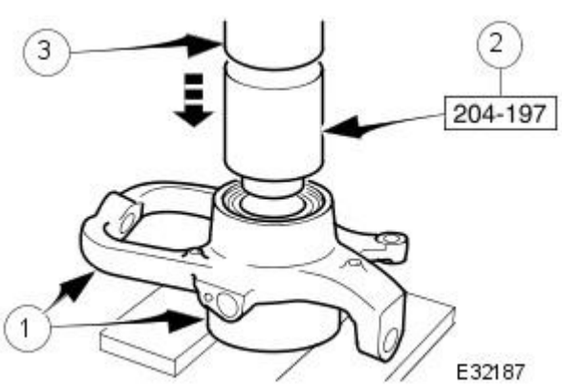

10. Using a hydraulic press, remove wheel bearing from vertical link.

• NOTE: Make sure the vertical link is level, and the supports are situated as near to the bearing bore as possible.

1. Position the vertical link so that the inboard side of the bearing bore is resting on suitable supports on the press-bed.
2. Position special tool on top of bearing.
3. Operate press to remove bearing from vertical link, discard bearing.

11. Clean relevant parts.

Installation

1. NOTE: The gap between the ears of the circlip must be positioned so that it is in the lowest position of the bore when the vertical link is fitted to the vehicle. Refer to General Procedures for further information.

Fit outboard circlip to the vertical link.

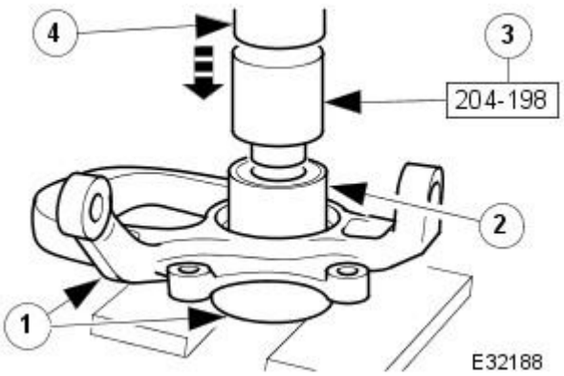

2. Using a hydraulic press, fit wheel bearing into the vertical link.

1. Position vertical link on the press bed with outboard side of the vertical link face down.
2. Position wheel bearing to vertical link.
3. Position special tool on top of wheel bearing.
4. Operate press to fit bearing, make sure that the bearing is fully seated by applying a three-ton seating load.

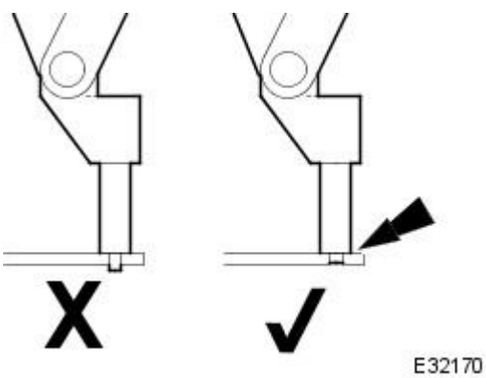

3. CAUTION: To prevent damage to the integral wheel-bearing seal, select a set of ends for the circlip pliers which do not protrude through the circlip ears.

4. NOTE: The gap between the ears of the circlip must be positioned so that it is in the lowest position of the bore, when the vertical link is fitted to the vehicle. Refer to General Procedures for further information.

Fit inboard circlip to the vertical link.

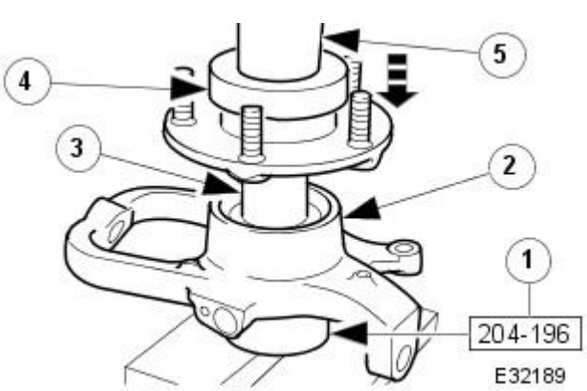

5. Using a hydraulic press, fit hub into vertical link.

1. Position special tool onto press bed.
2. Position the vertical link, with the inboard-side face down, onto the tool.
3. Position hub to bearing.
4. Position a flat steel plate across the face of the hub, DO NOT place plate across wheel studs.
5. Operate press to fit the hub, make sure the hub is fully seated in the wheel bearing by applying a three-ton seating load.

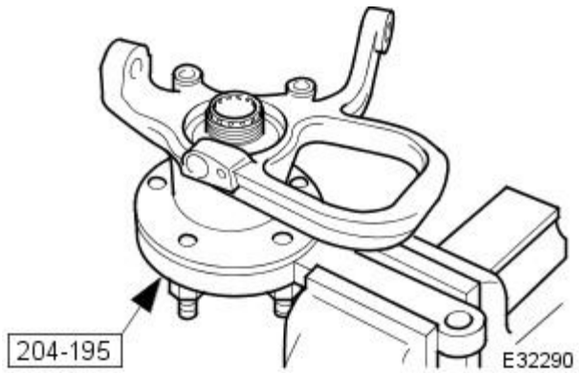

6. Using special tool, secure vertical link and hub assembly in a vice.

- Secure special tool in a vice.
- Position hub in tool.
- Fit and tighten wheel nuts.

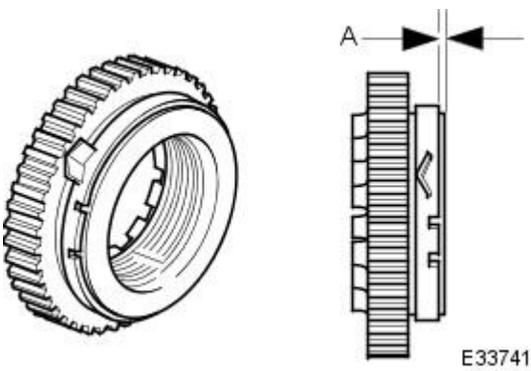

7. NOTE: The grease deflector ring was fitted to production vehicles at VIN number 018108 and on. Vehicles before this number must be fitted with a deflector ring when the rotor nut is removed for repair purposes. Deflector rings can be obtained from Jaguar Parts.

Where necessary, fit a grease deflector ring to the rotor nut.

- Fit the grease deflector ring as shown.
- The distance at 'A' must be 0.5 mm.

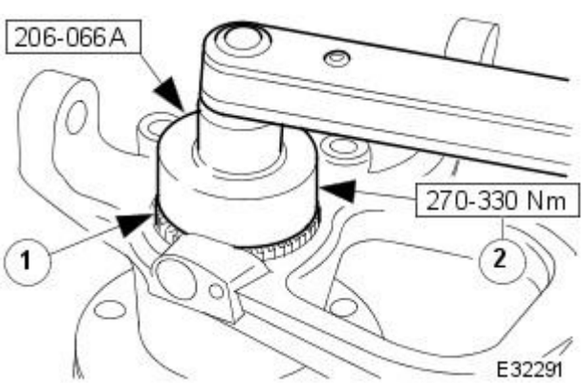

8. Fit rotor nut to hub.

1. Fit rotor nut.
2. Using special tool tighten rotor nut.

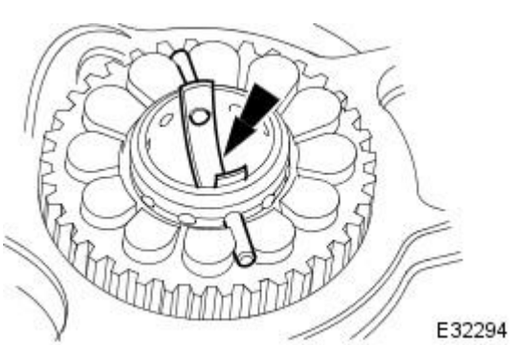

9. CAUTION: Do not slacken the rotor nut to engage the spring clip.

Fit rotor nut spring-clip.

- Fit spring clip into the hub retaining holes and, if aligned, into the castellated slots of the rotor nut.
- If the castellated slots of the rotor nut are not aligned it will be necessary to tighten the rotor nut further until the spring clip engages the slots.

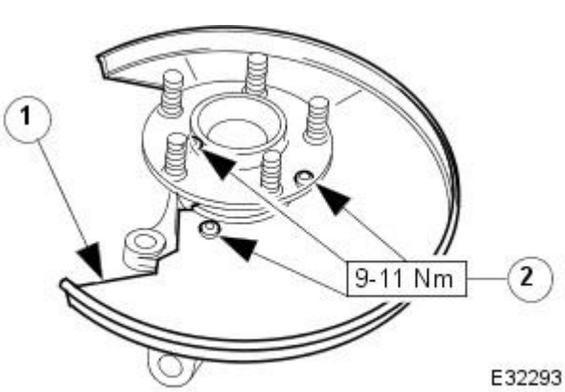

10. Fit disc shield to vertical link.

1. Position disc shield.
2. Fit and tighten bolts.

11. Fit vertical link and hub assembly to vehicle. Refer to operation 60.25.38.90.

12. Check wheel alignment and adjust if necessary. Refer to operation 57.65.01.

Front Suspension - Lower Arm Bushing

Removal and Installation

Special Tool(s)	
E36397	Ball Joint Taper Separator 204-192 (JD 219)
E36421	Lower Wishbone - Bush Remover 204-214 (JD 244)
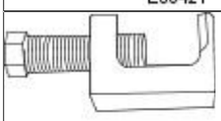 E31837	Ball joint splitter 204-293

Removal

1. CAUTION: Replacement of nuts and bolts: Various thread-locking devices are used on nuts and bolts throughout the vehicle. These devices restrict the number of times a nut or bolt can be used. See section 100-00 for information.

Open engine compartment and fit paintwork protection covers to fenders.

2. Raise front of vehicle and support on stands. Refer to section 100-02.

3. Remove front wheel. Refer to section 204-04.

4. Release stabilizer-bar link from lower wishbone.

- Remove nut and bolt.

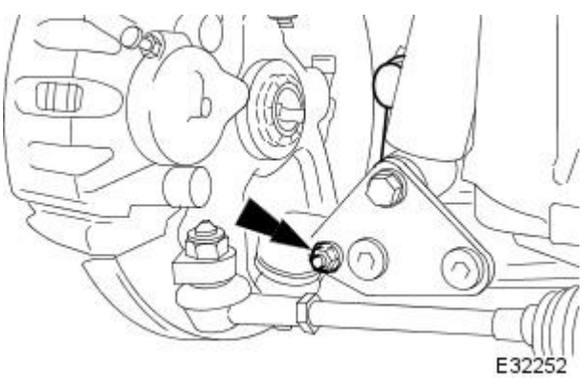

5. CAUTION: Do not allow the weight of the vertical link to hang on the upper ball-joint. Support the weight of the vertical link through-out the procedure, to prevent damage to the upper ball-joint.

Remove nut from lower ball joint.

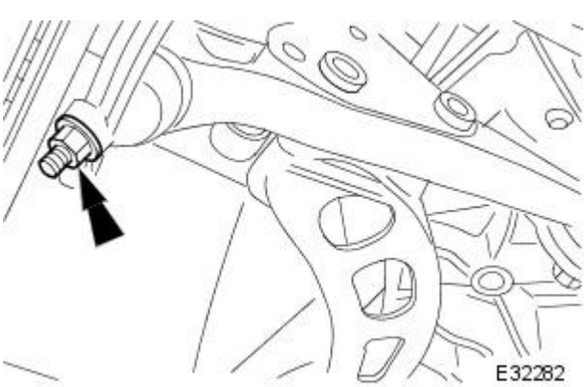

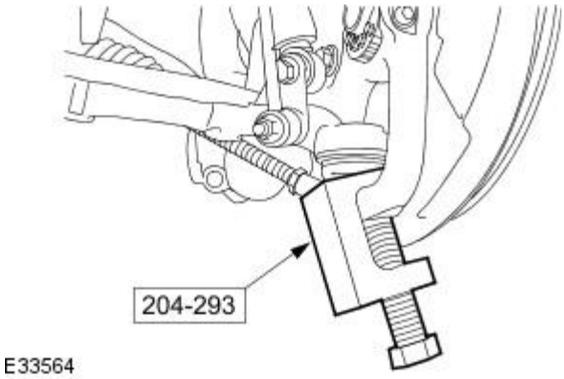

6. Release lower ball joint from vertical link.

1. Fit special tool to ball joint.
2. Tighten tool bolt to release ball joint taper .

- Remove tool and release ball joint from vertical link.

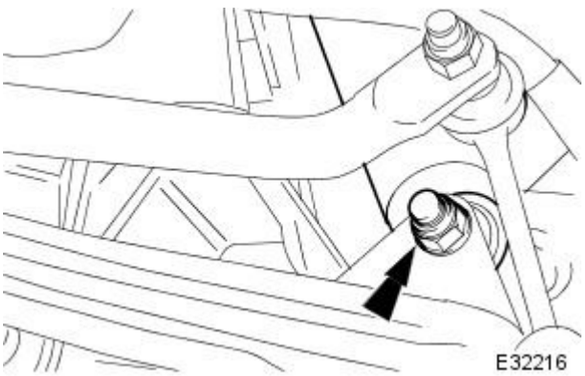

7. Release shock absorber from lower mounting.

- Remove nut and bolt.

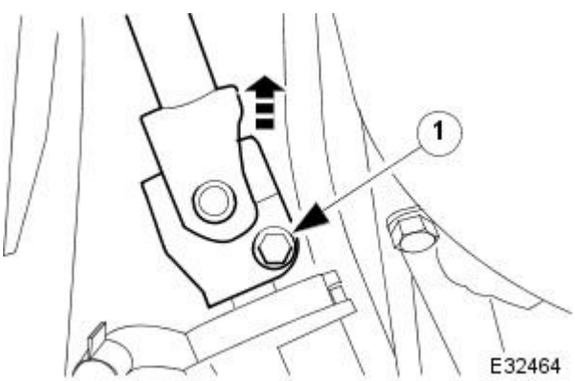

8. Release steering column from pinion shaft.

1. Remove clamp bolt.

- Move column upwards to release.

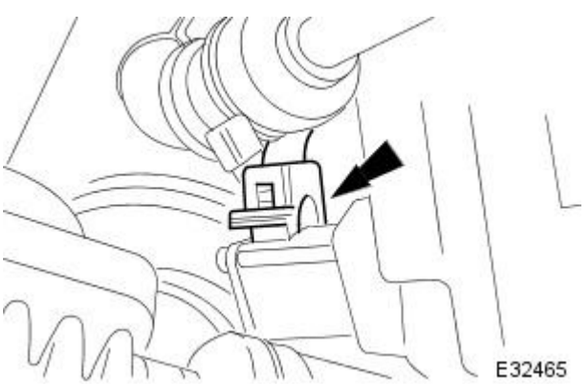

9. Disconnect connector from steering rack transducer.

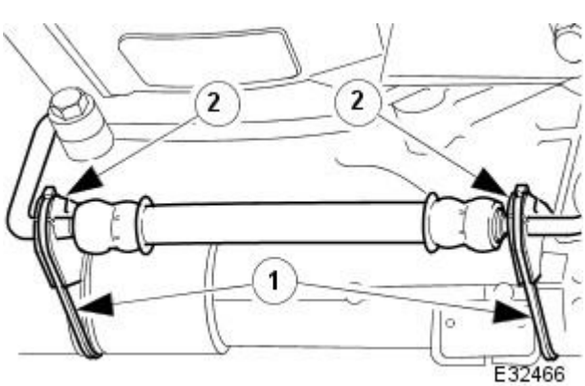

10. Release hose from steering rack.

1. Remove tie straps.
2. Remove insulation rubbers.

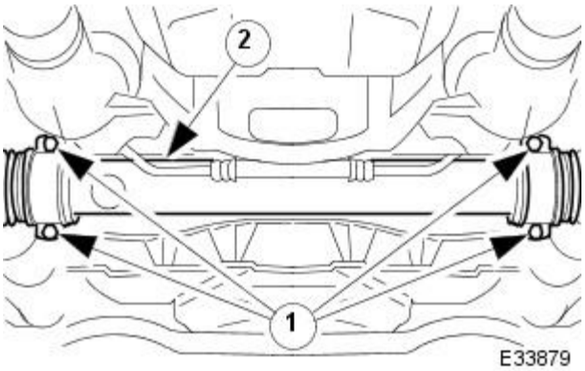

11. CAUTION: Do not allow the weight of steering rack to hang on the PAS pipes.

Lower steering rack.

1. Remove bolts from brackets.
2. Carefully lower steering rack.

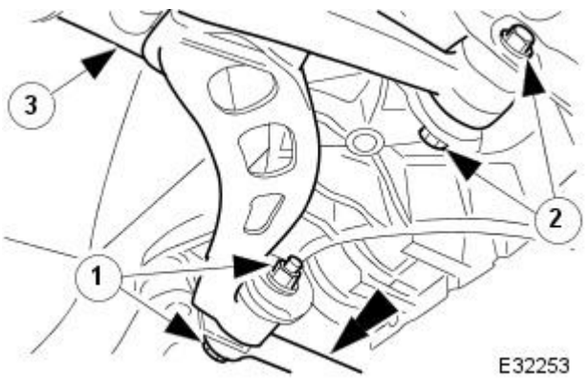

12. CAUTION: Note the position of the fulcrum bolts, as some vehicles are fitted with an eccentric bolt to the rear wishbone arm. See General Procedures section 204-01 for information.

Remove lower wishbone from crossbeam.

1. Remove nut and bolt from front wishbone and fulcrum tie.
2. Remove nut and bolt from rear wishbone arm.
3. Remove wishbone.

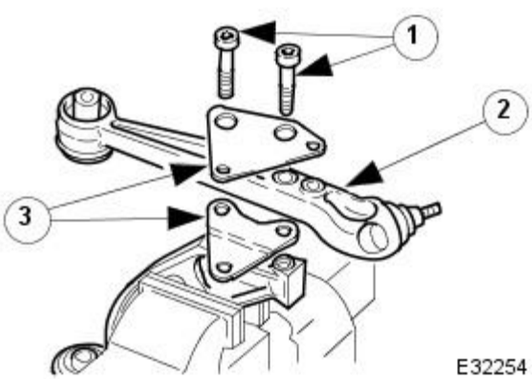

13. Disassemble lower wishbone.

- Position wishbone in a vice, with the front arm clamped in the jaws.
  1. Remove bolts.
  2. Remove rear arm.
  3. Collect shock absorber mounting-brackets.
- Remove front arm from vice.

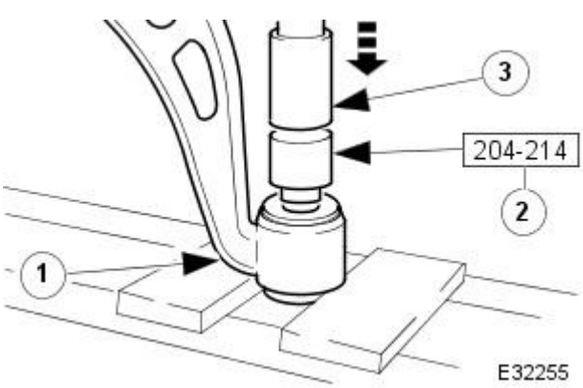

14. NOTE: For assembly reference, note orientation of bush.

Using a hydraulic press, remove bush from front wishbone arm.

1. Position arm on suitable supports on press bed.
2. Position special tool on top of bush.
3. Operate press to remove bush from arm. Initial press action will cause tool to shear through bush flange.

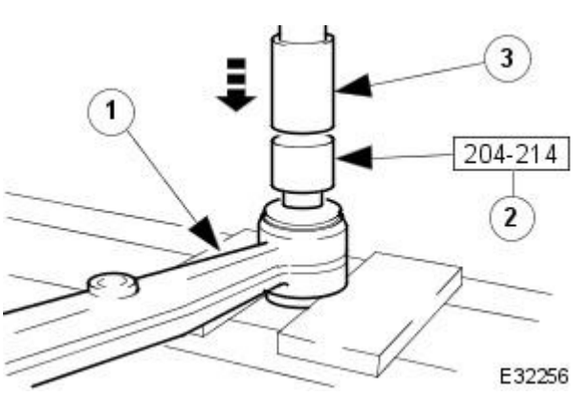

15. NOTE: For assembly reference, note orientation of bush.

Using a hydraulic press, remove bush from rear wishbone arm.

1. Position arm on suitable supports on press bed.
2. Position special tool on top of bush.
3. Operate press to remove bush from arm. Initial press action will cause tool to shear through bush flange.

Installation

CAUTION: The front and rear wishbone bushes are different lengths, make sure the bushes are fitted to the correct arms.

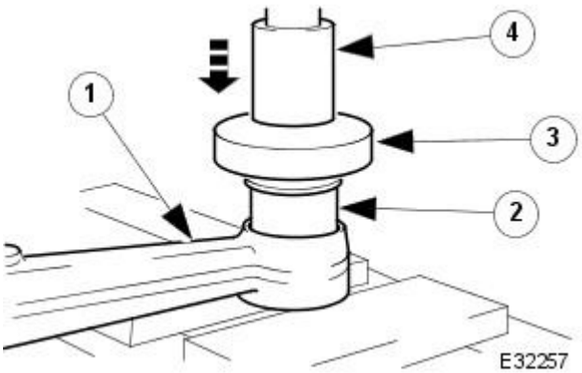

1. NOTE: Fit bush into arm in the same orientation as noted in the removal section.

Using a hydraulic press, fit bush into rear wishbone arm.

1. Position arm on suitable supports on press bed.
2. Align bush to arm.
3. Position suitable flat steel plate on top of bush.
4. Operate press to fit bush into arm.

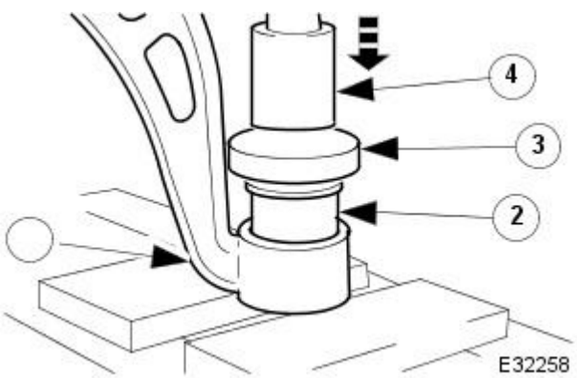

2. NOTE: Fit bush into arm in the same orientation as noted in the removal section.

Using a hydraulic press, fit bush into front wishbone arm.

1. Position arm on suitable supports on press bed.
2. Align bush to arm.
3. Position a suitable flat steel plate on top of bush.
4. Operate press to fit bush into arm.

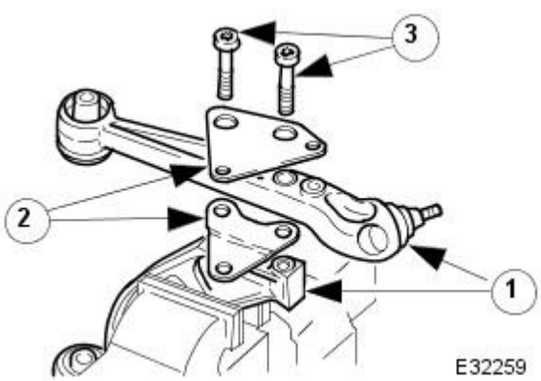

3. Assemble lower wishbone.

- Clamp front wishbone arm in a vice.
  1. Align rear arm to front arm.
  2. Align shock absorber mounting-brackets to arms.
  3. Fit bolts: DO NOT tighten bolts at this stage.

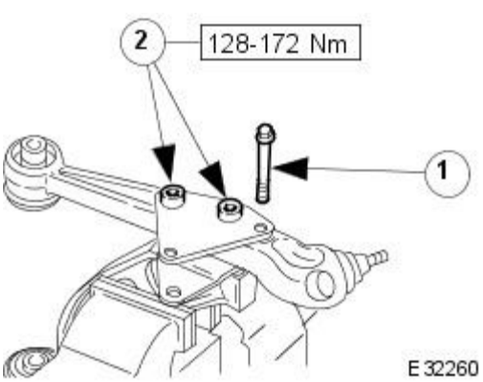

4. Align wishbone arms and tighten bolts.

1. Temporarily fit link bolt to align shock absorber mounting-brackets.
2. Tighten bolts.

- Remove link bolt.

5. Remove wishbone from vice.

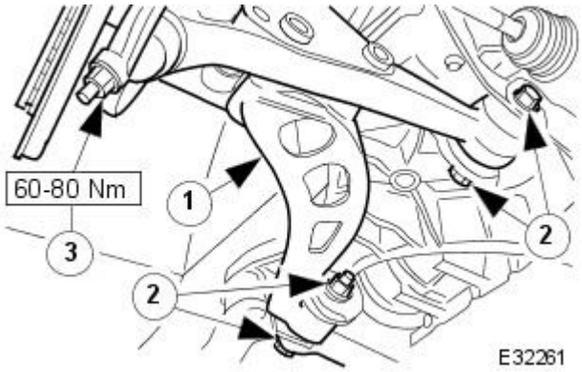

6. Fit wishbone to vehicle.

1. Position wishbone to crossbeam and insert ball joint pin into vertical link.
2. Fit front and rear fulcrum bolts and nuts: DO NOT tighten at this stage.
3. Fit and tighten ball-joint nut.

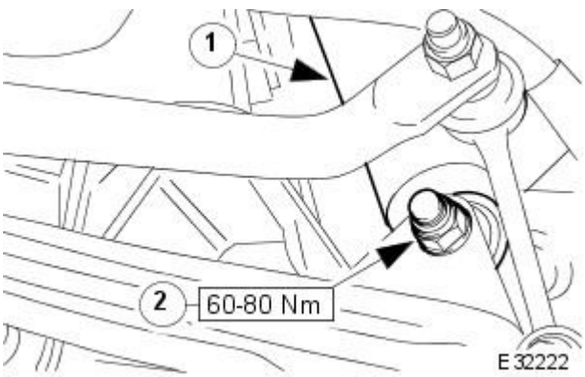

7. Fit shock absorber to lower mounting bracket.

- Align shock absorber to mounting bracket and fit bolt.
- Fit and tighten nut.

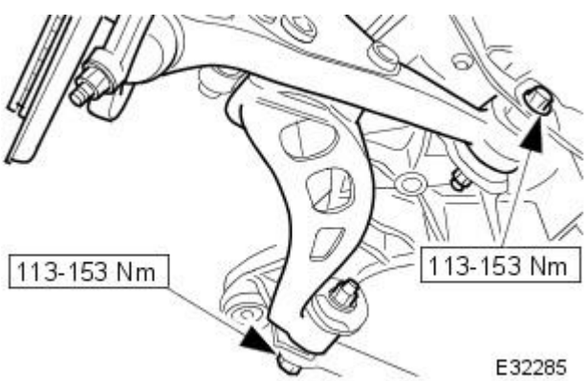

8. CAUTION: Make sure the fulcrum bolts are fitted in their original positions as noted in removal.

Tighten lower wishbone fulcrum bolts.

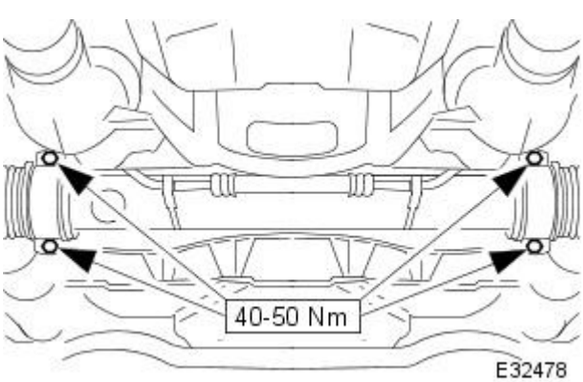

9. Fit steering rack.

- Align steering rack to vehicle.
- Fit and tighten bolts.

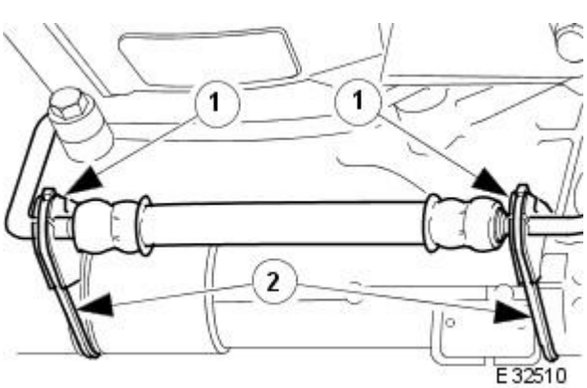

10. Secure hose to steering rack.

1. Fit insulation rubbers.
2. Secure hose to steering rack with tie straps.

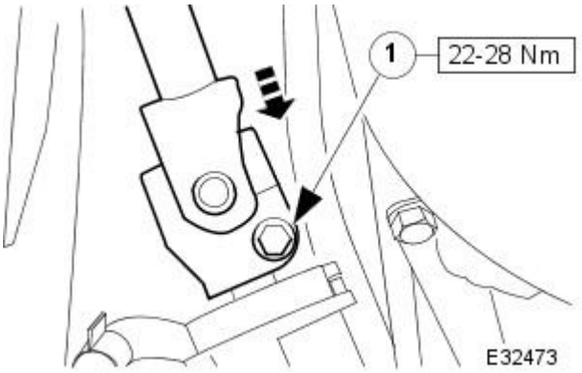

11. NOTE: Make sure steering wheel and road wheels are in the central position before fitting the steering column.

Fit steering column to pinion shaft.

- Move column downwards onto pinion shaft.

  1. Fit and tighten clamp bolt.

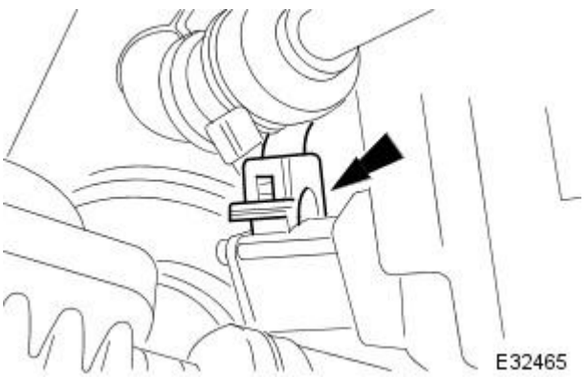

12. Connect electrical connector to steering rack transducer.

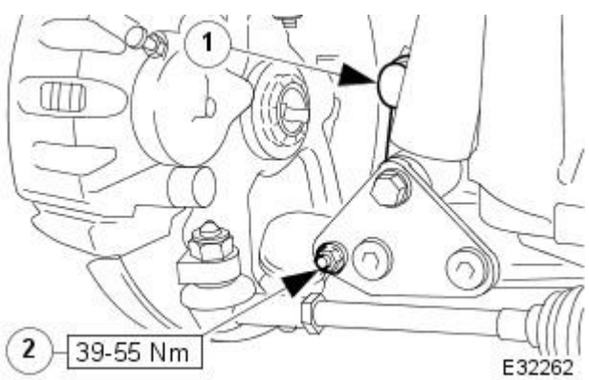

13. Connect link to lower wishbone.

1. Align link to wishbone and fit bolt.
2. Fit and tighten nut.

14. Fit wheel. Refer to section 204-04.

15. Remove stands and lower vehicle. Refer to section 100-02.

16. Remove paintwork protection covers.

17. Check front suspension geometry. Refer to General Procedure 57.65.02.

Front Suspension - Shock Absorber and Spring Assembly

Removal and Installation

Removal

1. CAUTION: Replacement of nuts and bolts: Various thread-locking devices are used on nuts and bolts throughout the vehicle. These devices restrict the number of times a nut or bolt can be used. See section 100-00 for information.

Open engine compartment and fit paintwork protection covers to fenders.

2. Raise front of vehicle and support on stands. Refer to section 100-02.

3. Remove front wheel. Refer to section 204-04.

4. CAUTION: The suspension must remain supported by the jack throughout this operation, to prevent damage to the upper and lower ball-joints.

Place a jack under the lower wishbone, raise the jack until the weight of the suspension is supported.

5. Remove shock absorber upper-mounting nuts.

1. Remove covers.
2. Vehicles fitted with adaptive damping: disconnect connector.
3. Remove nuts.

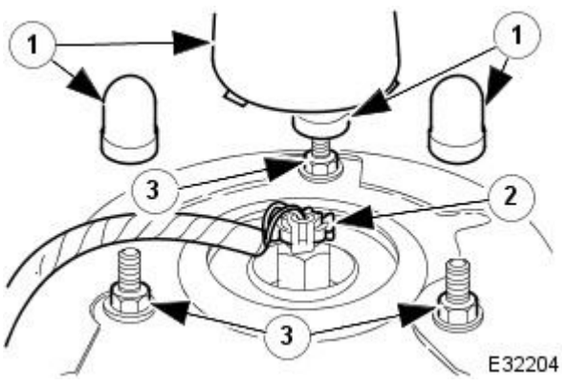

6. Remove nut securing shock absorber to lower mounting, DO NOT remove bolt at this stage.

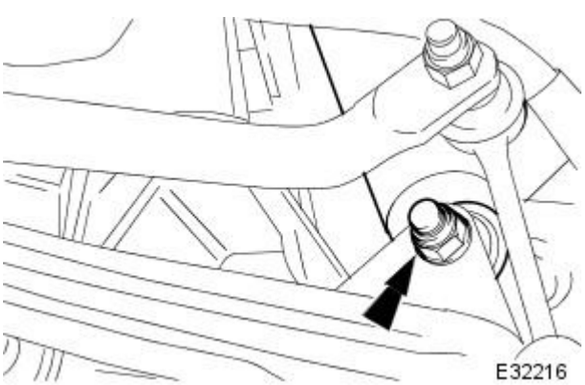

7. Carefully lower the jack supporting the suspension, while guiding the shock absorber, upper mounting studs through the body. Stop lowering the jack when the studs have passed through the body.

8. CAUTION: For installation reference, note position of washers and shims before removing fulcrum shaft.

Release upper wishbone from crossbeam, to provide access for the removal of the shock absorber and spring assembly.

1. Remove nut.
2. Remove fulcrum shaft.
3. Collect washers and shims.
4. Release upper wishbone from crossbeam.

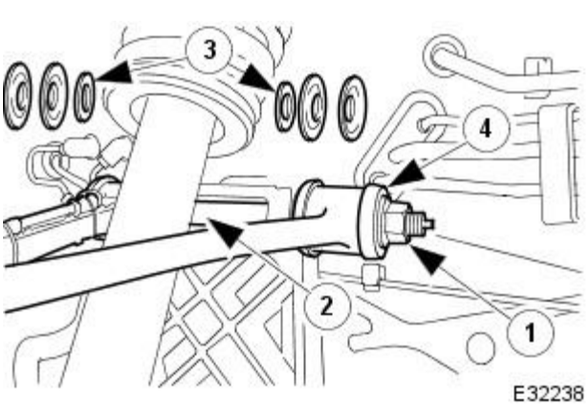

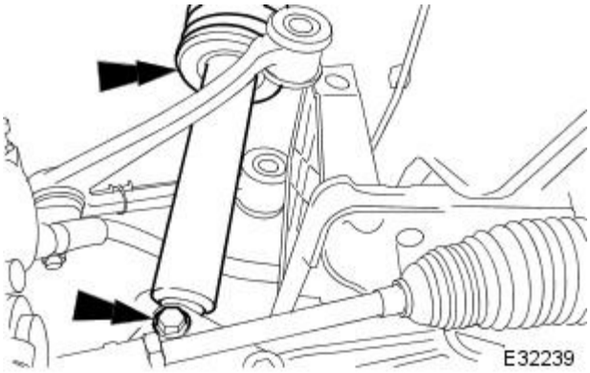

9. CAUTION: Do not stretch the brake hose when removing shock absorber and spring assembly.

With assistance, remove shock absorber and spring assembly.

- Remove bolt from shock absorber lower mounting.
- Remove shock absorber and spring assembly from vehicle.

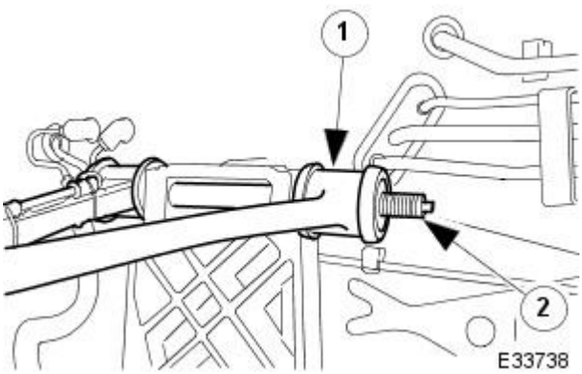

10. Reposition upper wishbone.

1. Align upper wishbone to crossbeam.
2. Temporarily fit fulcrum shaft.

11. Clean relevant parts.

Installation

E32247

1. Final alignment of shock absorber with upper mounting studs.

1. Fit jaw protectors to vice.
2. Secure assembly in the vice by clamping across two of the upper mounting studs.
3. Align the lower bush bore so that it is parallel with two of the upper mounting studs.

- Remove assembly from vice.

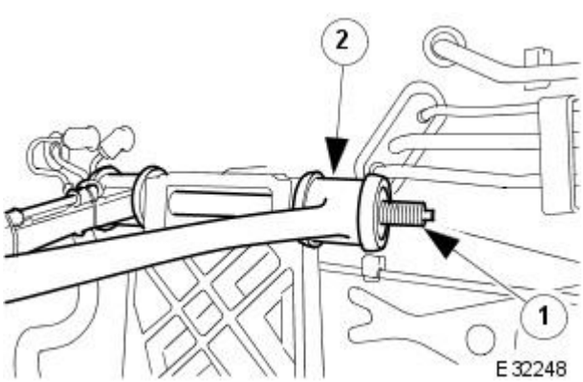

2. Release upper wishbone to provide access for the fitting of the shock absorber and spring assembly.

1. Remove fulcrum shaft.
2. Release upper wishbone.

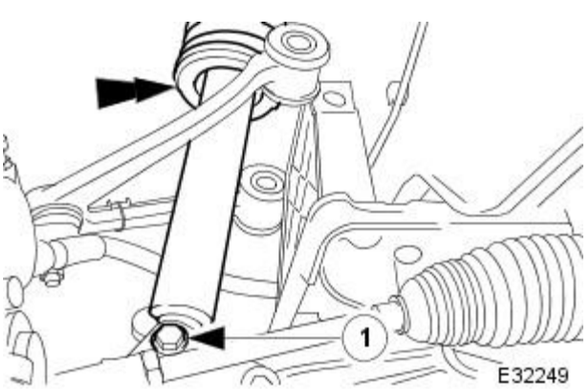

3. CAUTION: Do not stretch brake-hose when fitting shock absorber and spring assembly.

With assistance, fit shock absorber and spring assembly.

- Position shock absorber to lower mounting.
  1. Fit bolt to lower mounting, DO NOT fit nut at this stage.

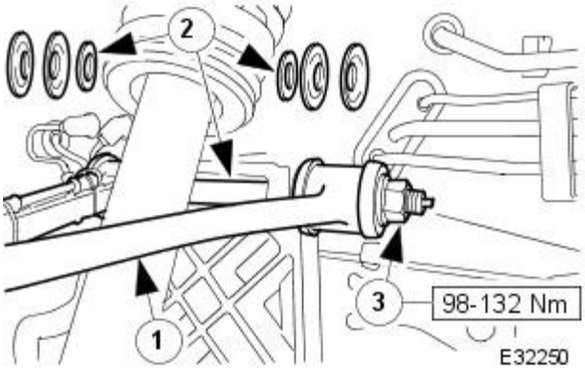

4. Fit upper wishbone.

1. Position wishbone to crossbeam.
2. Fit fulcrum shaft; washers and shims in the positions noted in removal.
3. Fit and tighten nut.

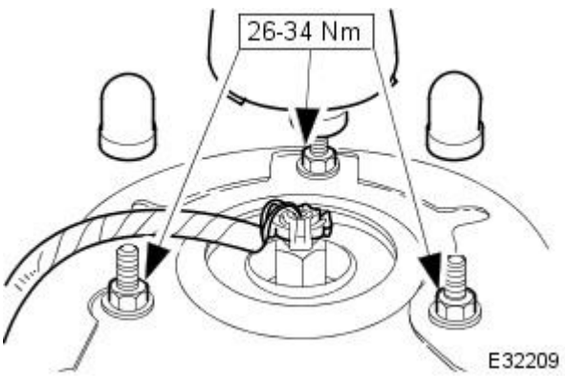

5. CAUTION: Make sure the adaptive damping electrical connector is correctly aligned. Failure to follow these instructions may cause damage to the electrical connector.

Fit shock absorber and spring assembly upper-mounting to body.

- Raise suspension carefully on jack, and guide upper mounting studs into body stud-holes.
- Fit and tighten nuts.
- Vehicles fitted with adaptive damping: connect connector.
- Fit covers.

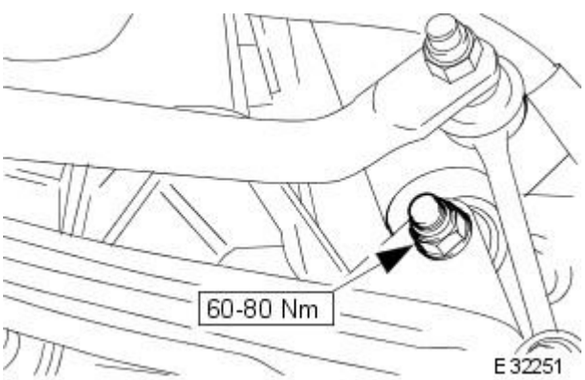

6. Fit nut to shock absorber lower mounting.

- Fit and tighten nut.

7. Lower and remove jack supporting suspension.

8. Fit wheel. Refer to section 204-04.

9. Remove stands and lower vehicle.

10. Remove paintwork protection covers.

Front Suspension - Shock Absorber Bushing

Removal and Installation

Special Tool(s)	
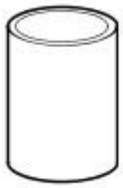 E52622	Bushing Remover / installer 204-335
E52621	Bushing remover 204-533
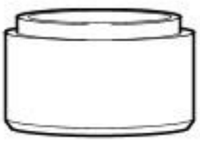 E52620	Bushing installer 204-534

Removal

1. Mark the orientation of the shock absorber eye in relation to the lower suspension arm.
2. Remove the front shock absorber.
   For additional information, refer to: Shock Absorber and Spring Assembly (204-01 Front Suspension, Removal and Installation).
3. NOTE: With assistance make sure the tool is aligned.

   Using the special tool, support the shock absorber.

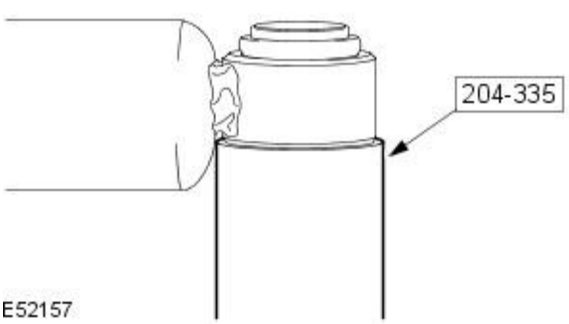

4. NOTE: With assistance make sure the tool is aligned.

   Position and align the special tool to the shock absorber bush.

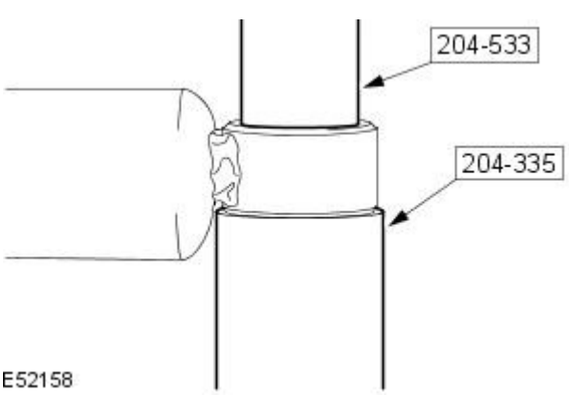

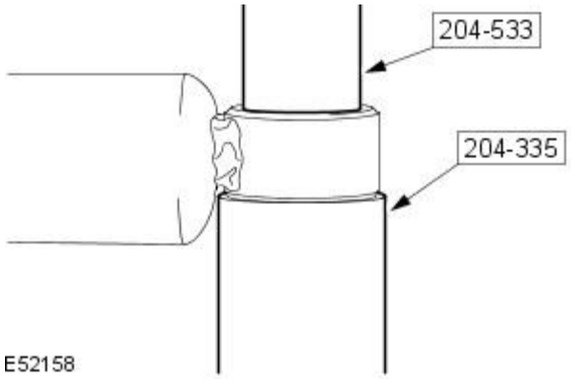

5. NOTE: With assistance make sure the tool is aligned.

Using special tools, slowly push the bush from the shock absorber.

Installation

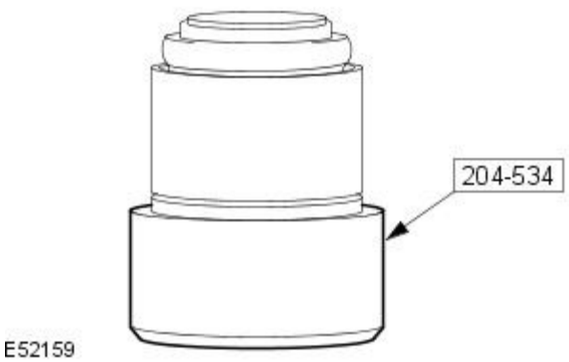

1. NOTE: Make sure the bush is clean and free from oil or grease.

• NOTE: Use a suitable lubricant to allow the bush to locate into the special tool.

Locate the new bush in the special tool.

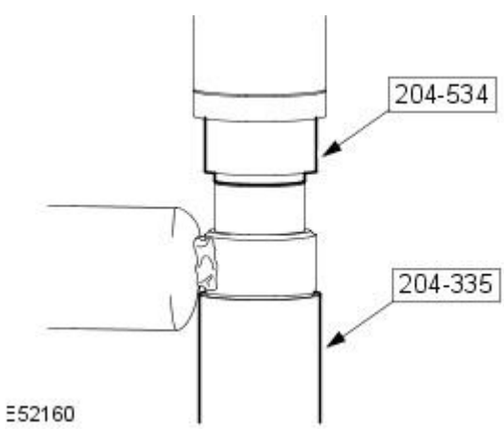

2. NOTE: Make sure the damper is clean and free from grease or oil and is not damaged prior to pushing in the new bush.

• NOTE: Make sure the shock absorber and bush are placed in the correct orientation.

Using the special tools, align the bush to the shock absorber.

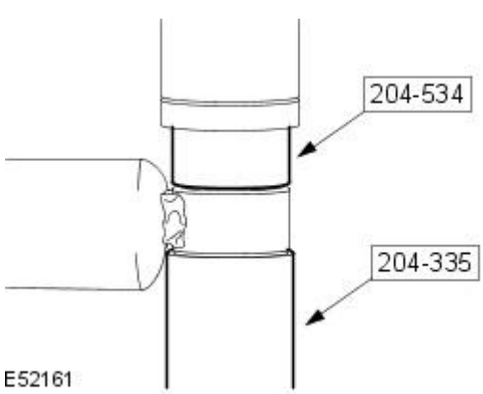

3. NOTE: Make sure correct alignment is maintained.

Slowly push the bush into the shock absorber until the tool reaches the stop.

4. Install the front shock absorber.
For additional information, refer to: Shock Absorber and Spring Assembly (204-01 Front Suspension, Removal and Installation).

Front Suspension - Rear Lower Arm

Removal and Installation

Removal

CAUTION: Replacement of nuts and bolts: Various thread-locking devices are used on nuts and bolts throughout the vehicle. These devices restrict the number of times a nut or bolt can be used. See section 100-00 for information.

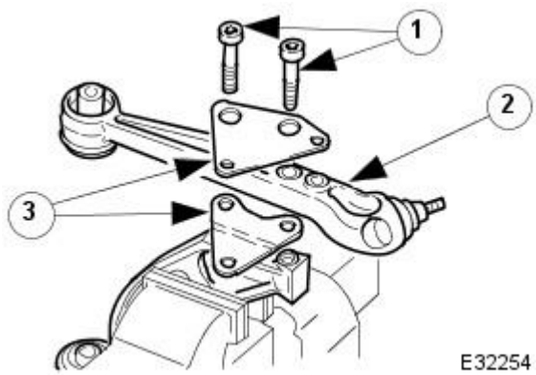

1. Raise front of vehicle and support on stands. Refer to Section 100-02.
2. Remove appropriate road wheel. Refer to Section 204-04.
3. Remove lower wishbone. Refer to 60.35.02.90
4. Separate wishbone arms.
    1. Clamp wishbone front arm in vise and remove bolts securing front arm to rear arm.
    2. Remove and discard wishbone rear arm/lower ball joint assembly.
    3. Remove and retain shock absorber lower mounting brackets.
5. Remove wishbone front arm from vise.
6. Thoroughly clean wishbone front arm and shock absorber lower mounting brackets.

Installation

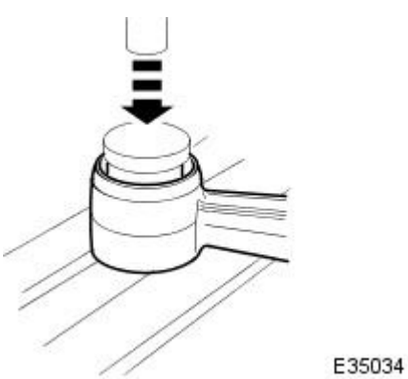

1. Fit bush to rear arm assembly.
    - Position wishbone rear arm front uppermost on press bed.
    - Position bush on rear arm.
    - Place a steel plate on top of bush.
    - Ensuring there is sufficient underside clearance for bush protrusion, operate press to fully seat bush.
2. Remove steel plate from bush.
3. Remove wishbone rear arm assembly from press.
4. Install wishbone rear arm and shock absorber mounting brackets to wishbone front arm.
    1. Position shock absorber mounting brackets and wishbone securing bolts on rear arm.
    2. Position wishbone front arm on bolts.
    - Install but do not tighten bolts.

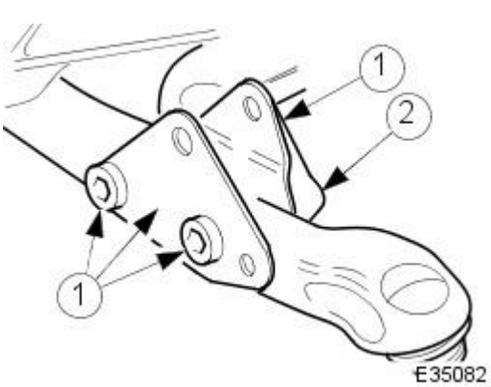

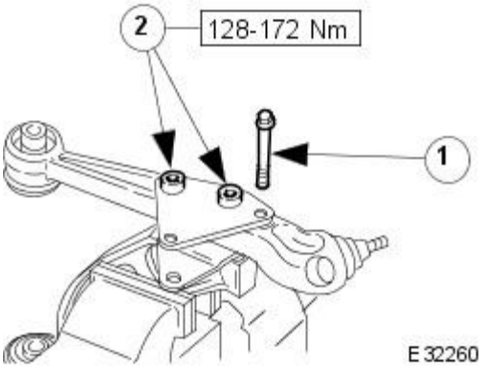

5. Secure wishbone rear arm to front arm.

1. Install but do not tighten stabilizer bar link bolt and nut.
2. Tighten wishbone rear arm to front arm bolts to 128-172Nm.

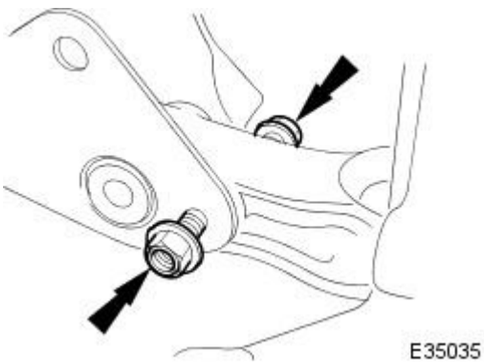

6. Remove stabilizer bar link bolt.

7. Release wishbone assembly from vise and remove plastic transit cover from ball joint.

8. Install lower wishbone assembly. Refer to 60.35.02.90

9. Install road wheel. Refer Section 204-04.

10. Raise front of vehicle, remove stands and lower vehicle. Refer to Section 100-02.

Front Suspension - Upper Arm Bushing

Removal and Installation

Special Tool(s)	
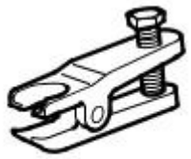 E36397	Ball Joint Taper Separator 204-192 (JD 219)

Removal

1. CAUTION: Replacement of nuts and bolts: Various thread-locking devices are used on nuts and bolts throughout the vehicle. These devices restrict the number of times a nut or bolt can be used. See section 100-00 for information.

Open engine compartment and fit paintwork protection covers to fenders.

2. Raise front of vehicle and support on stands. Refer to section 100-02.

3. Remove front wheel. Refer to section 204-04.

4. Release ABS speed sensor harness from upper wishbone.

- Remove tie straps.
- Reposition harness.

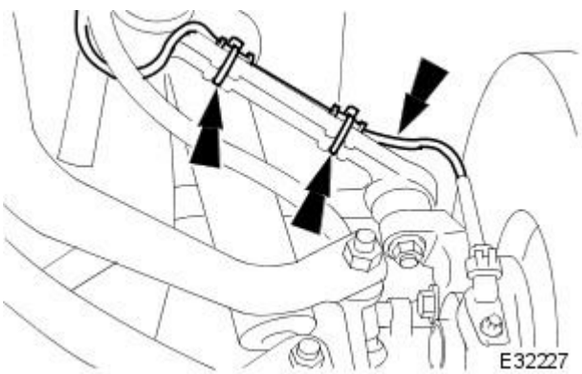

5. Remove nut from upper ball joint.

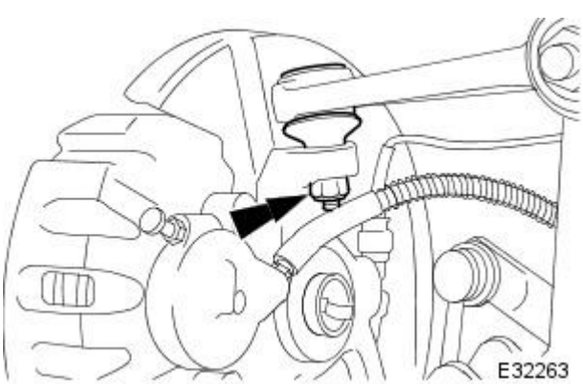

6. CAUTION: Do not allow the weight of the vertical link to hang on the brake hose.

Release upper ball-joint from vertical link.

- Using a strong length of wire secure the vertical link to the shock absorber.
  1. Fit special tool to ball joint.
  2. Tighten tool bolt to release ball joint pin-taper.
- Remove tool and disengage ball joint from vertical link.

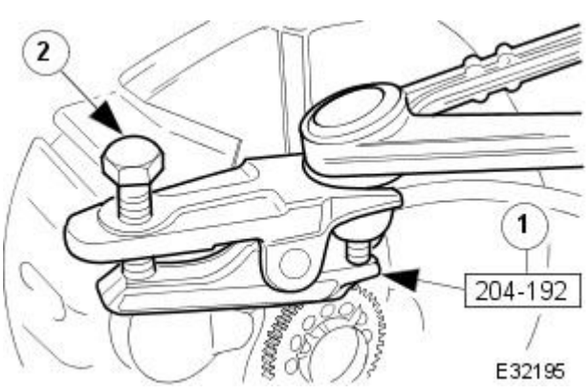

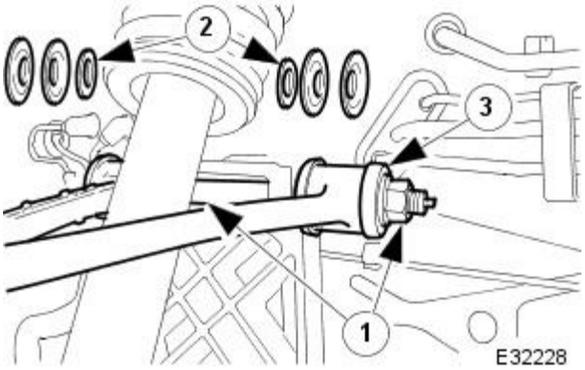

7. CAUTION: For installation reference, note the position of washers and shims before removing fulcrum bolt.

Remove upper wishbone.

1. Remove nut.
2. Remove fulcrum bolt: collect washers and shims.
3. Remove wishbone.

8. Secure wishbone in a vice.

9. Remove fulcrum bushes from wishbone.

1. Using a suitable drift remove spacer tube from bush.
2. Prise out both sections of bush.

- Repeat procedure to remove remaining bush.

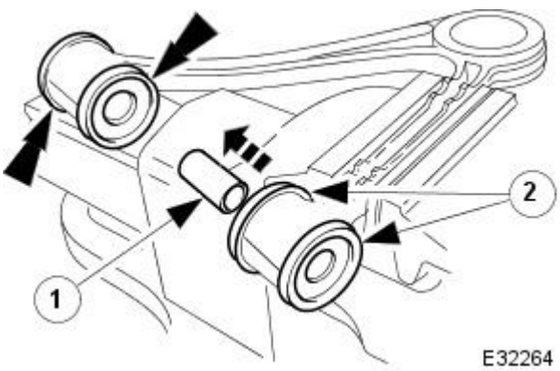

10. Clean relevant parts.

Installation

1. Fit spacer tube into bush section.

- Apply a suitable lubricant to bush and spacer tube.
- Insert spacer tube into bush.

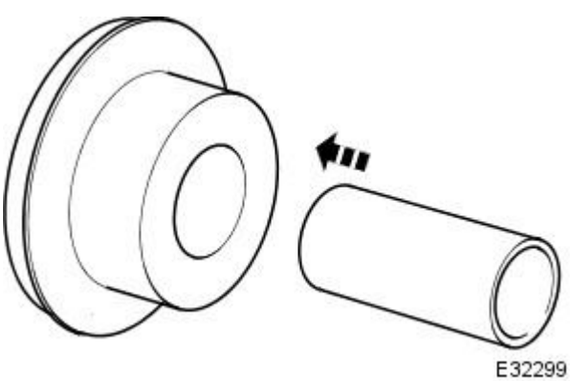

2. Fit jaw protectors to vice.

3. Using a vice, fit first section of bush into wishbone bore.

- Apply a suitable lubricant to bush.
  1. Align first section of bush and spacer tube to bore.
  2. Place wishbone and bush between vice jaws and tighten vice until bush is fully seated.
- Remove wishbone from vice.

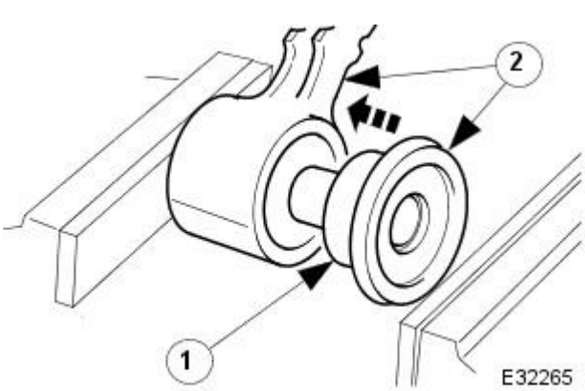

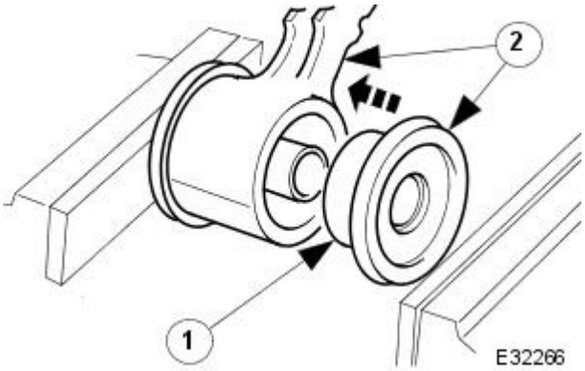

4. Fit second section of bush to wishbone.

- Apply a suitable lubricant to bush.
  1. Align second section of bush to bore, make sure spacer tube engages bush.
  2. Place wishbone and bush between vice jaws and tighten vice until bush is fully seated.
- Remove wishbone from vice.

5. Repeat the previous three pictorial-procedures to fit other bush into wishbone.

6. Fit wishbone to crossbeam.

1. Align wishbone to crossbeam.
2. Fit fulcrum bolt; shims and washers to their original positions as noted in the removal section.
3. Fit and tighten nut.

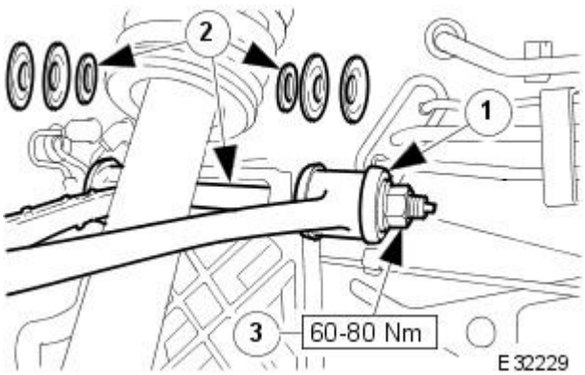

7. Fit upper ball joint to vertical link.

1. Engage ball joint taper-pin into vertical link.
2. Fit and tighten nut.

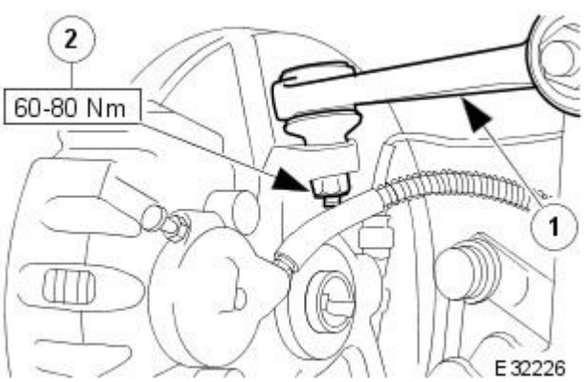

8. Release vertical link from shock absorber.

9. Secure ABS harness to upper wishbone.

- Position harness and secure with tie clips.

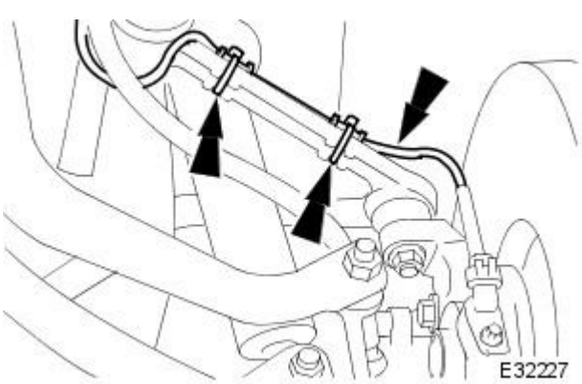

10. Fit wheel. Refer to section 204-04.

11. Remove stands and lower vehicle.

12. Remove paintwork protection covers.

Front Suspension - Wheel Hub

Removal and Installation

Special Tool(s)	
E36390	Hub Remover 204-193 (JD 224)
E36391	Hub Removal Collets 204-194 (JD 225)
E36410	Hub Holding Tool 204-195 (JD 227)
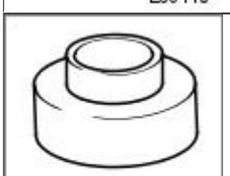 E36430	Hub Replacer 204-196 (JD 236)
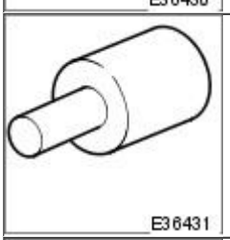 E36431	Wheel Bearing Remover 204-197 (JD 237)
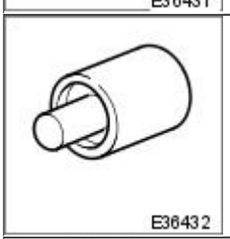 E36432	Wheel Bearing Replacer 204-198 (JD 238)
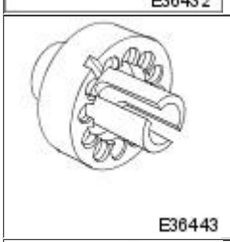 E36443	ABS Rotor Nut Socket 206-066A
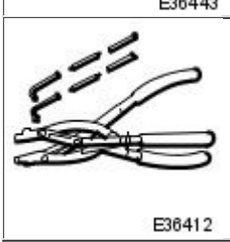 E36412	Circlip Pliers 18G 1004

Removal

1. CAUTION: Replacement of nuts and bolts: Various thread-locking devices are used on nuts and bolts throughout the vehicle. These devices restrict the number of times a nut or bolt can be used. See section 100-00 for information.

Remove vertical link and hub assembly. Refer to operation 60.25.38.90.

2. Remove brake-disc shield from vertical link.

1. Remove screws.
2. Remove disc shield.

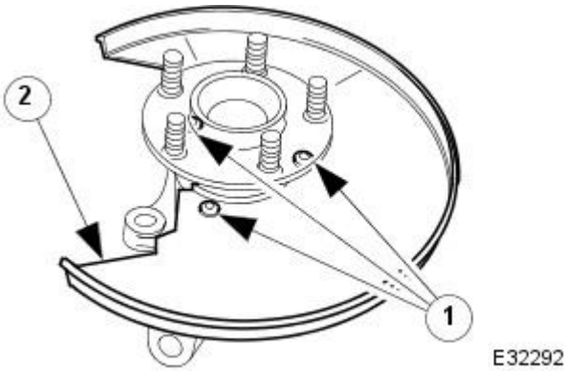

3. Using special tool, secure vertical link and hub assembly in a vice.

- Secure special tool in a vice.
- Position hub in tool.
- Fit and tighten wheel nuts.

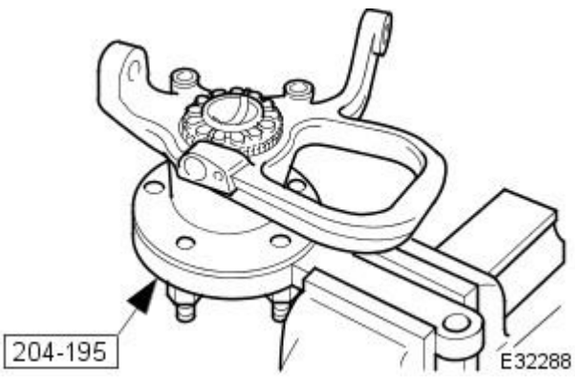

4. Remove rotor nut spring-clip.

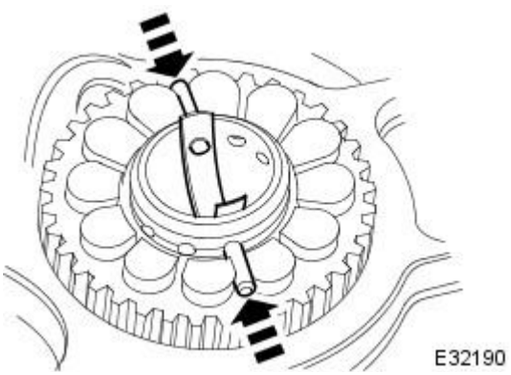

5. Remove rotor nut.

- Using special tool remove rotor nut.

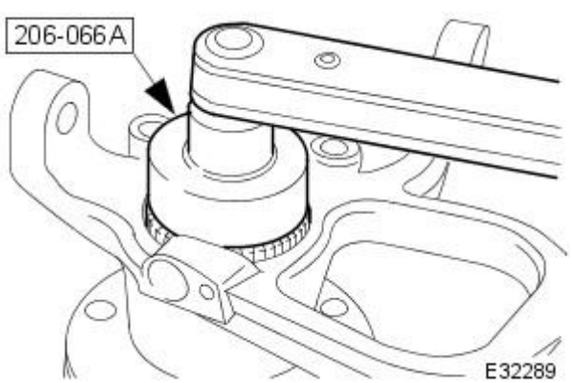

6. Remove vertical link and hub assembly from special tool.

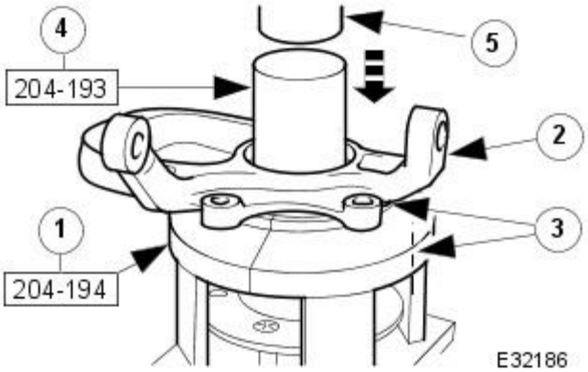

7. Using a hydraulic press, remove hub from vertical link.

1. Place special tool on press bed.
2. Position vertical link and hub assembly into tool collets.
3. Make sure one of the disc shield screw-bosses is in the center of one of the tool collets.
4. Position special tool on top of hub.

7. CAUTION: Removing the hub from the vertical link damages the wheel bearing. A new wheel bearing MUST be fitted to the vertical link.

5. Operate press to remove hub from vertical link.

8. Remove and discard the inboard circlip from the vertical link.

9. Remove and discard outboard circlip from the vertical link.

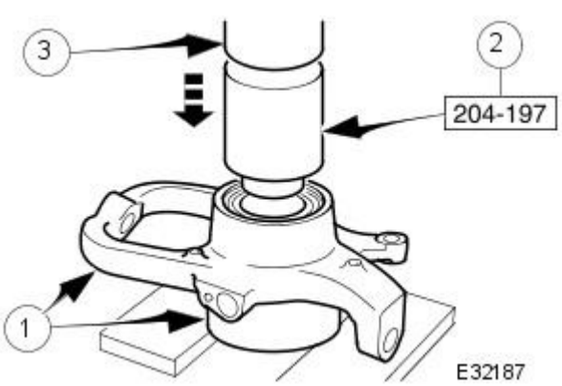

10. Using a hydraulic press, remove the wheel bearing from the vertical link.

• NOTE: Make sure the vertical link is level, and the supports are situated as near to the bearing bore as possible.

1. Position the vertical link so that the inboard side of the bearing bore is resting on suitable supports on the press-bed.
2. Position special tool on top of bearing.
3. Operate press to remove bearing from vertical link, discard bearing.

11. Clean relevant parts.

Installation

1. NOTE: The gap between the ears of the circlip must be positioned so that it is in the lowest position of the bore when the vertical link is fitted to the vehicle. Refer to General Procedures for further information.

Fit outboard circlip to the vertical link.

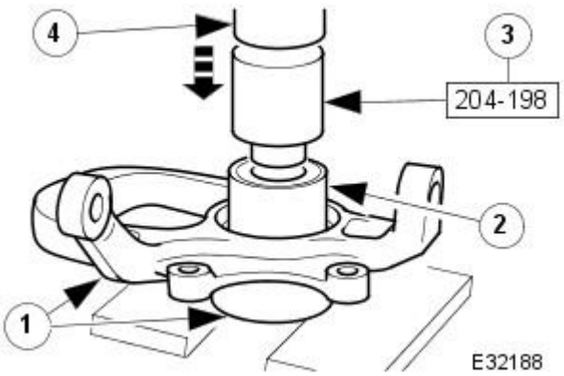

2. Using a hydraulic press, fit the wheel bearing into the vertical link.

1. Position vertical link on the press bed with outboard side of the vertical link face down.
2. Position wheel bearing to vertical link.
3. Position special tool on top of wheel bearing.
4. Operate press to fit bearing, make sure that the bearing is fully seated by applying a three-ton seating load.

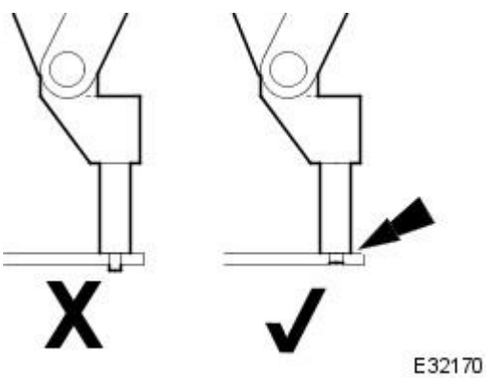

3. CAUTION: To prevent damage to the integral wheel-bearing seal, select a set of ends for the circlip pliers which do not protrude through the circlip ears.

4. NOTE: The gap between the ears of the circlip must be positioned so that it is in the lowest position of the bore, when the vertical link is fitted to the vehicle. Refer to General Procedures for further information.

Fit inboard circlip to the vertical link.

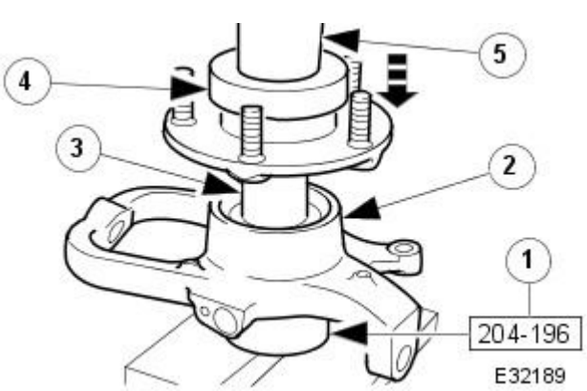

5. Using a hydraulic press, fit hub into vertical link.

1. Position special tool onto press bed.
2. Position the vertical link, with the inboard-side face down, onto the tool.
3. Position hub to bearing.
4. Position a flat steel plate across the face of the hub, DO NOT place plate across wheel studs.
5. Operate press to fit the hub, make sure the hub is fully seated in the wheel bearing by applying a three-ton seating load.

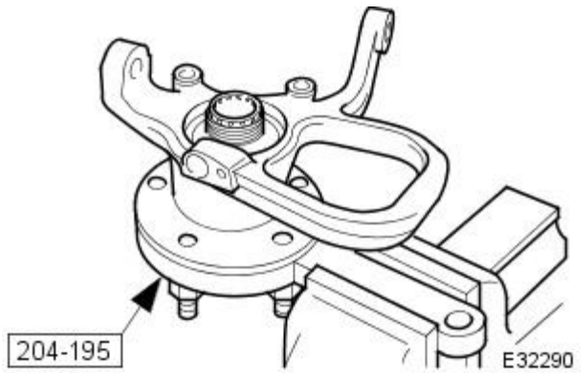

6. Using special tool, secure vertical link and hub assembly in a vice.

- Secure special tool in a vice.
- Position hub in tool.
- Fit and tighten wheel nuts.

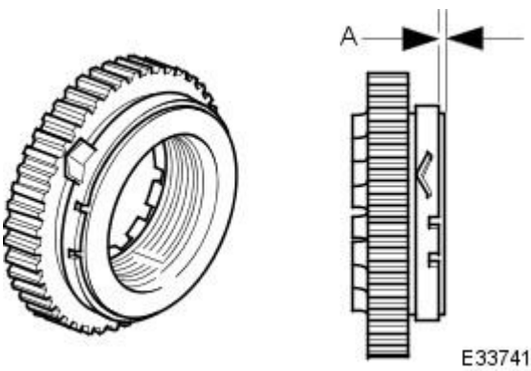

7. NOTE: The grease deflector ring was fitted to production vehicles at VIN number 018108 and on. Vehicles before this number must be fitted with a deflector ring when the rotor nut is removed for repair purposes. Deflector rings can be obtained from Jaguar Parts.

Where necessary, fit a grease deflector ring to the rotor nut.

- Fit the grease deflector ring as shown.
- The distance at 'A' must be 0.5 mm.

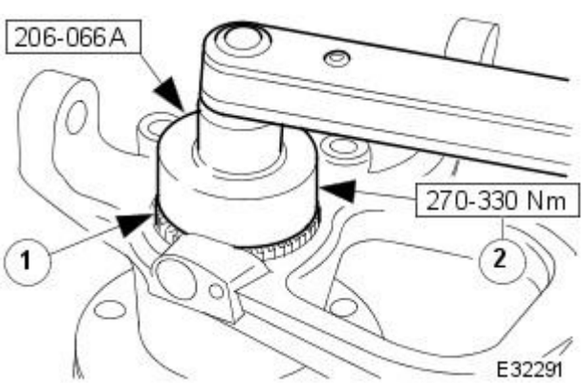

8. Fit rotor nut to hub.

1. Fit rotor nut.
2. Using special tool tighten rotor nut.

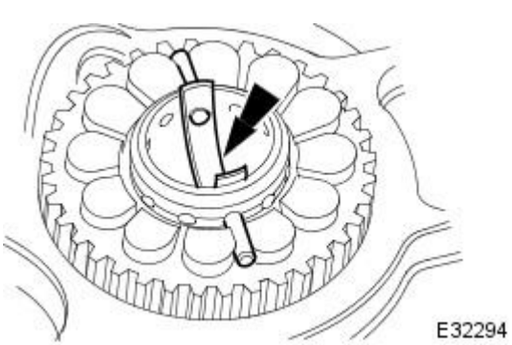

9. CAUTION: Do not slacken the rotor nut to engage the spring clip.

Fit rotor nut spring-clip.

- Fit spring clip into the hub retaining holes and, if aligned, into the castellated slots of the rotor nut.
- If the castellated slots of the rotor nut are not aligned it will be necessary to tighten the rotor nut further until the spring clip engages the slots.

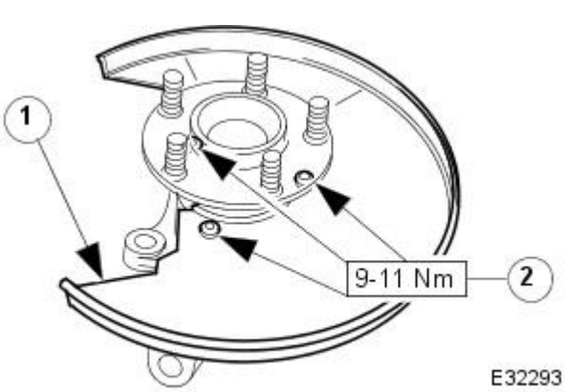

10. Fit disc shield to vertical link.

1. Position disc shield.
2. Fit and tighten bolts.

11. Fit vertical link and hub assembly to vehicle. Refer to operation 60.25.38.90.

12. Check wheel alignment and adjust if necessary. Refer to operation 57.65.01.

Front Suspension - Wheel Knuckle

Removal and Installation

Special Tool(s)	
E36390	Hub Remover 204-193 (JD 224)
E36391	Hub Removal Collets 204-194 (JD 225)
E36410	Hub Holding Tool 204-195 (JD 227)
E36430	Hub Replacer 204-196 (JD 236)
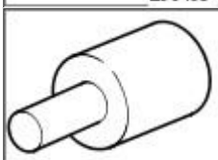 E36431	Wheel Bearing Remover 204-197 (JD 237)
E36432	Wheel Bearing Replacer 204-198 (JD 238)
E36443	ABS Rotor Nut Socket 206-066A
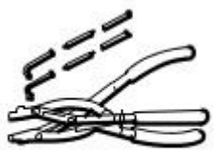 E36412	Circlip Pliers 18G 1004

Removal

1. CAUTION: Replacement of nuts and bolts: Various thread-locking devices are used on nuts and bolts throughout the vehicle. These devices restrict the number of times a nut or bolt can be used. See section 100-00 for information.

Remove vertical link and hub assembly. Refer to operation 60.25.38.90.

2. Remove brake-disc shield from vertical link.

1. Remove screws.
2. Remove disc shield.

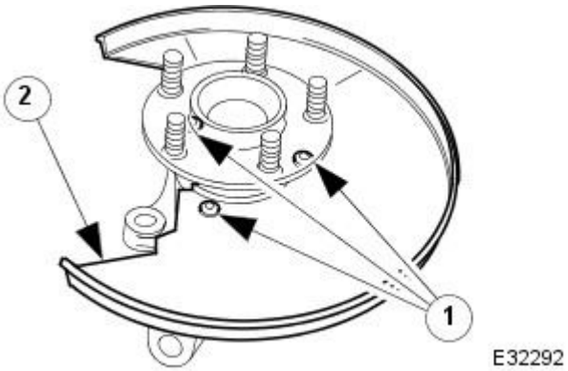

3. Using special tool, secure vertical link and hub assembly in a vice.

- Secure special tool in a vice.
- Position hub in tool.
- Fit and tighten wheel nuts.

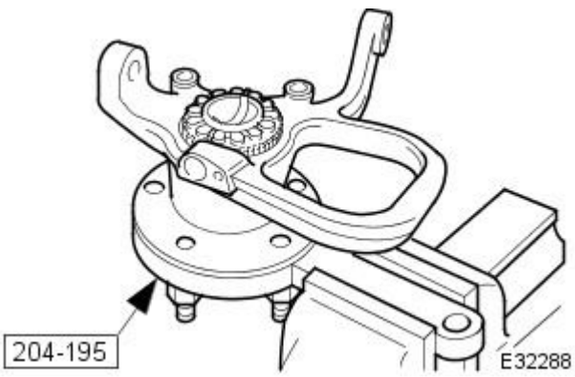

4. Remove rotor nut spring-clip.

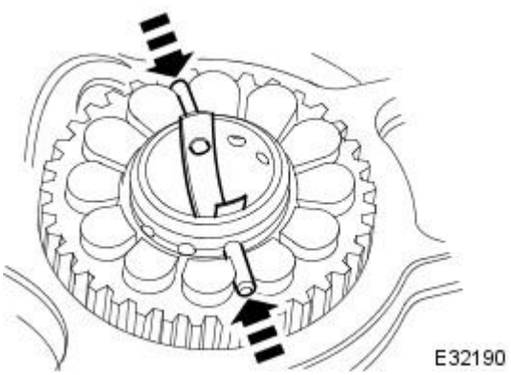

5. Remove rotor nut.

- Using special tool remove rotor nut.

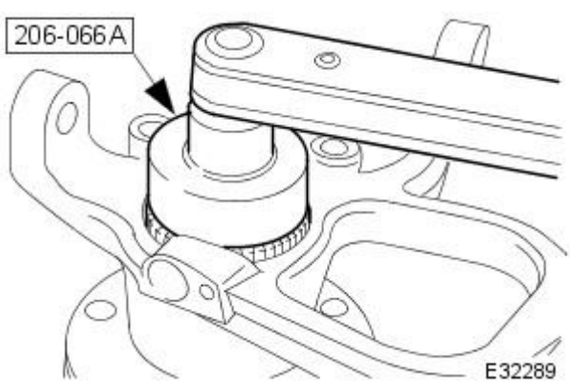

6. Remove vertical link and hub assembly from special tool.

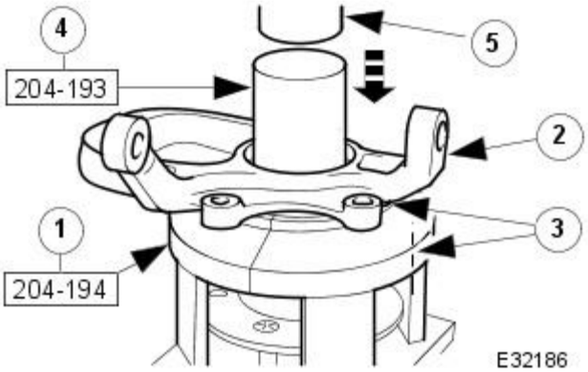

7. Using a hydraulic press, remove hub from vertical link.

1. Place special tool on press bed.
2. Position vertical link and hub assembly into tool collets.
3. Make sure one of the disc shield screw-bosses is in the center of one of the tool collets.
4. Position special tool on top of hub.

7. CAUTION: Removing the hub from the vertical link damages the wheel bearing. A new wheel bearing MUST be fitted to the vertical link.

5. Operate press to remove hub from vertical link.

8. Remove and discard the inboard circlip from the vertical link.

9. Remove and discard outboard circlip from the vertical link.

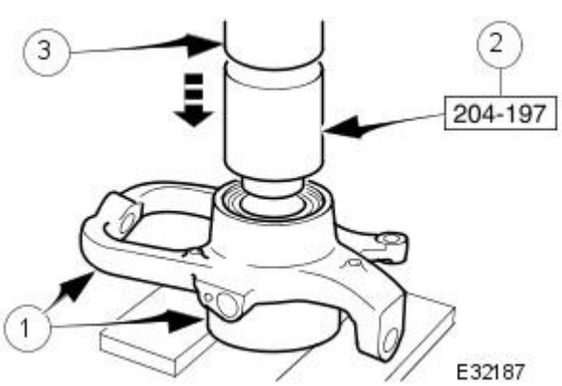

10. Using a hydraulic press, remove wheel bearing from vertical link.

• NOTE: Make sure the vertical link is level, and the supports are situated as near to the bearing bore as possible.

1. Position the vertical link so that the inboard side of the bearing bore is resting on suitable supports on the press-bed.
2. Position special tool on top of bearing.
3. Operate press to remove bearing from vertical link, discard bearing.

11. Clean relevant parts.

Installation

1. NOTE: The gap between the ears of the circlip must be positioned so that it is in the lowest position of the bore when the vertical link is fitted to the vehicle. Refer to General Procedures for further information.

Fit outboard circlip to the vertical link.

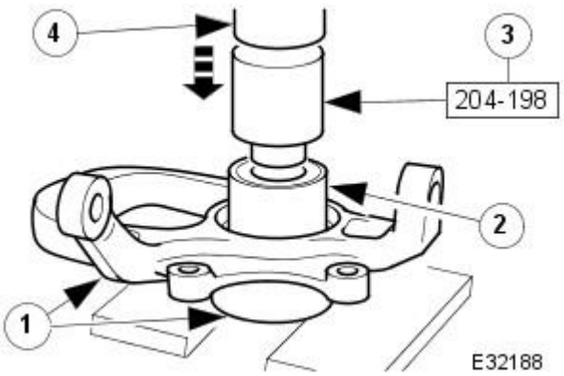

2. Using a hydraulic press, fit wheel bearing into the vertical link.

1. Position vertical link on the press bed with outboard side of the vertical link face down.
2. Position wheel bearing to vertical link.
3. Position special tool on top of wheel bearing.
4. Operate press to fit bearing, make sure that the bearing is fully seated by applying a three-ton seating load.

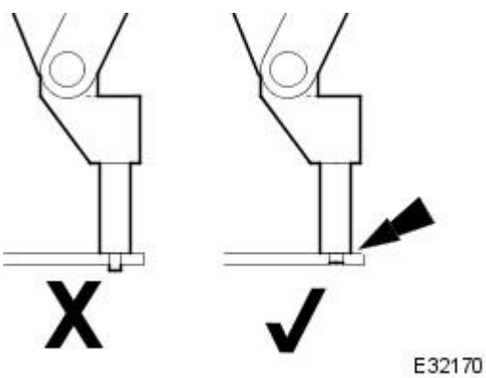

3. CAUTION: To prevent damaging the integral wheel-bearing seal, select a set of ends for the circlip pliers which do not protrude through the circlip ears.

4. NOTE: The gap between the ears of the circlip must be positioned so that it is in the lowest position of the bore, when the vertical link is fitted to the vehicle. Refer to General Procedures for further information.

Fit inboard circlip to the vertical link.

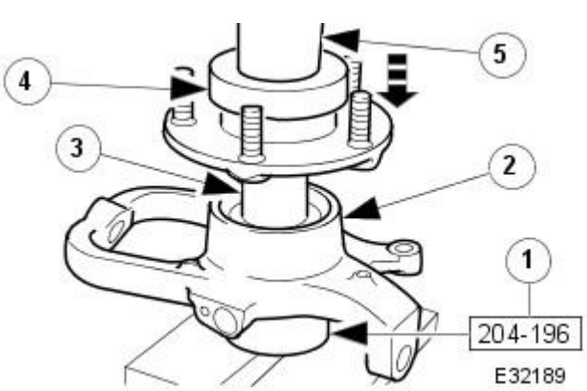

5. Using a hydraulic press, fit hub into vertical link.

1. Position special tool onto press bed.
2. Position the vertical link, with the inboard-side face down, onto the tool.
3. Position hub to bearing.
4. Position a flat steel plate across the face of the hub, DO NOT place plate across wheel studs.
5. Operate press to fit the hub, make sure the hub is fully seated in the wheel bearing by applying a three-ton seating load. 57.65.01.

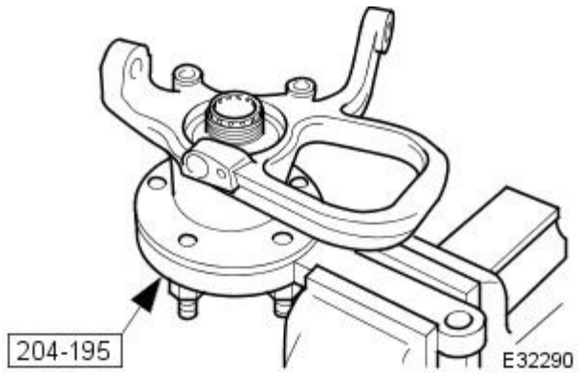

6. Using special tool, secure vertical link and hub assembly in a vice.

- Secure special tool in a vice.
- Position hub in tool.
- Fit and tighten wheel nuts.

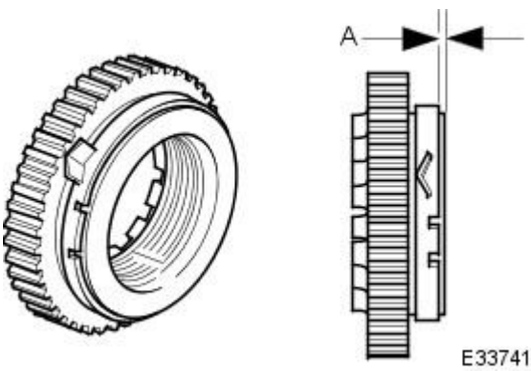

7. NOTE: The grease deflector ring was fitted to production vehicles at VIN number 018108 and on. Vehicles before this number must be fitted with a deflector ring when the rotor nut is removed for repair purposes. Deflector rings can be obtained from Jaguar Parts.

Where necessary, fit a grease deflector ring to the rotor nut.

- Fit the grease deflector ring as shown.
- The distance at 'A' must be 0.5 mm.

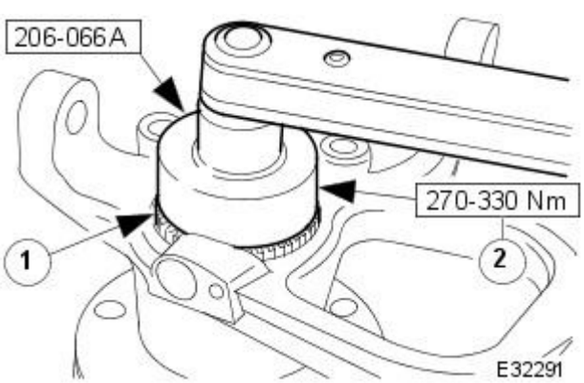

8. Fit rotor nut to hub.

1. Fit rotor nut.
2. Using special tool tighten rotor nut.

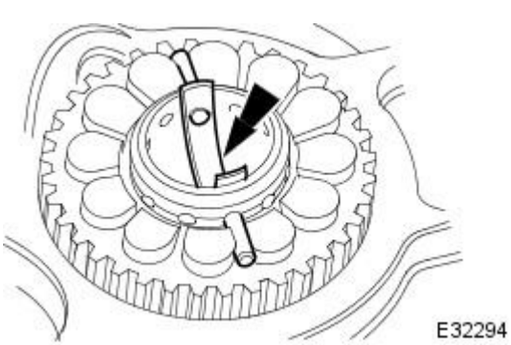

9. CAUTION: Do not slacken the rotor nut to engage the spring clip.

Fit rotor nut spring-clip.

- Fit spring clip into the hub retaining holes and, if aligned, into the castellated slots of the rotor nut.
- If the castellated slots of the rotor nut are not aligned it will be necessary to tighten the rotor nut further until the spring clip engages the slots.

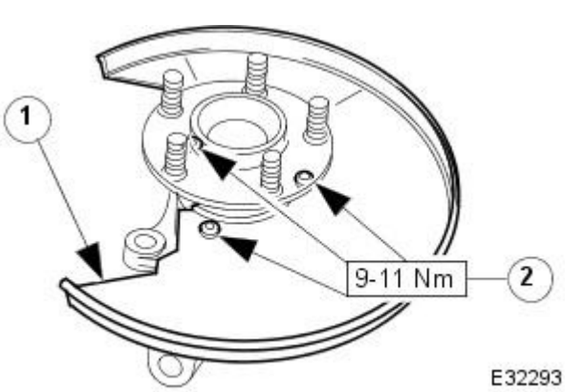

10. Fit disc shield to vertical link.

1. Position disc shield.
2. Fit and tighten bolts.

11. Fit vertical link and hub assembly to vehicle. Refer to operation 60.25.38.90.

12. Check wheel alignment and adjust if necessary. Refer to operation

Front Suspension - Wheel Knuckle and Wheel Hub Assembly

Removal and Installation

Special Tool(s)	
E36397	Tie-Rod-End Taper Separator 211-098 (JD 100)
E36397	Ball Joint Taper Separator 204-192 (JD 219)
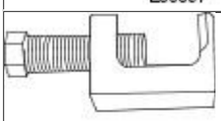 E31837	Ball joint splitter 204-293

Removal

1. CAUTION: Replacement of nuts and bolts: Various thread-locking devices are used on nuts and bolts throughout the vehicle. These devices restrict the number of times a nut or bolt can be used. See section 100-00 for information.

Open engine compartment and fit paintwork protectors to fenders.

2. Raise front of vehicle and support on stands. Refer to section 100-02.

3. Remove front wheel. Refer to section 204-04.

4. CAUTION: Do not allow the brake caliper to hang on the brake hose.

Remove front brake disc. Refer to operation 70.10.12.

5. Remove wheel speed-sensor from vertical link.

- Remove bolt.

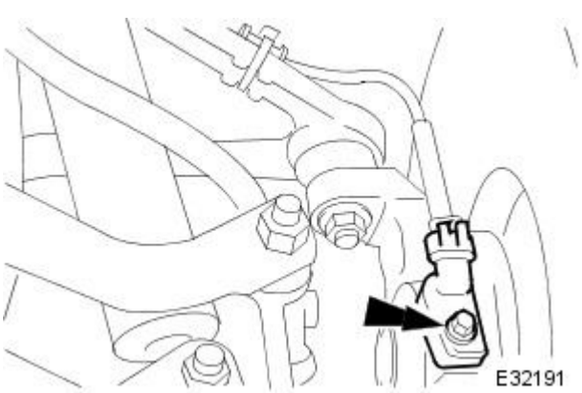

6. Remove nut securing tie-rod end to steering arm.

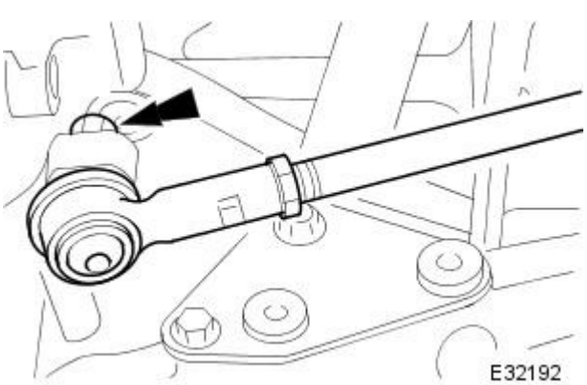

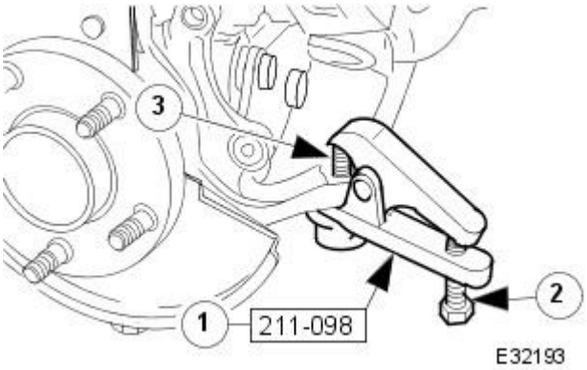

7. Release tie-rod end from steering arm.

1. Fit special tool to tie-rod end.
2. Tighten tool bolt to release tie-rod end, taper pin.
3. Remove tool and disengage tie-rod end from steering arm.

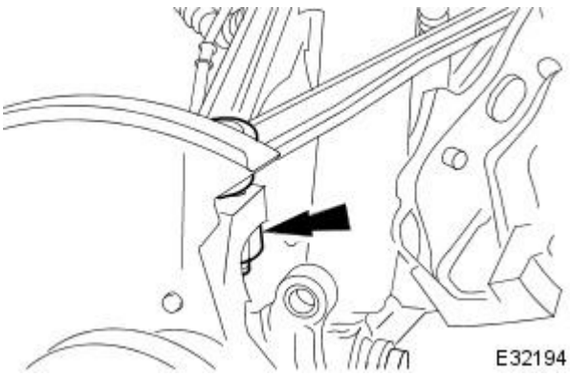

8. Remove nut from upper-wishbone ball joint.

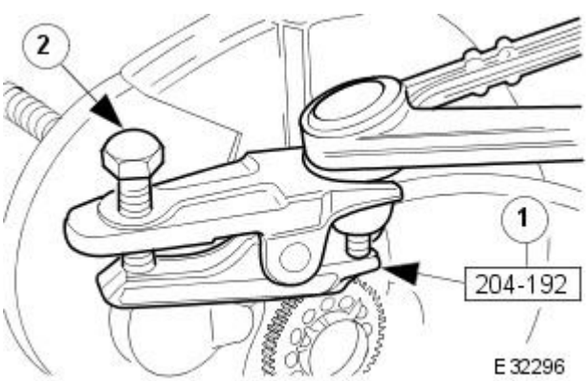

9. CAUTION: Do not allow the weight of the vertical link to hang on the lower ball joint, after releasing the upper ball joint.

Release upper-wishbone ball joint from vertical link.

1. Fit special tool to ball joint.
2. Tighten tool bolt to release ball joint taper-pin.

- Remove tool and disengage ball joint from vertical link.

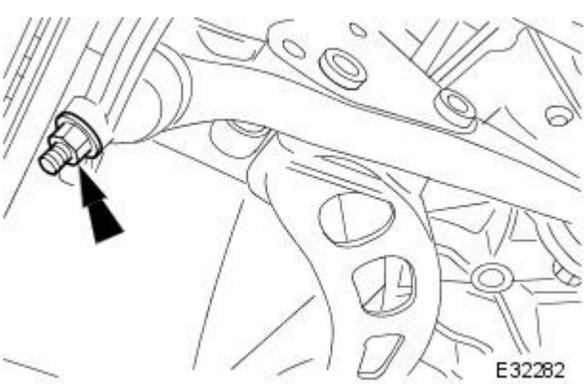

10. Remove nut from lower-wishbone ball joint.

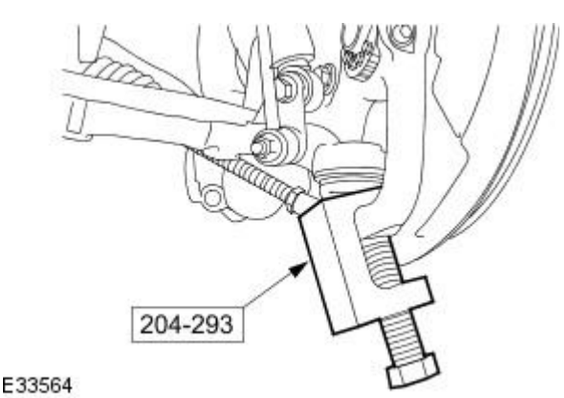

11. Release lower ball joint from vertical link.

1. Fit special tool to ball joint.
2. Tighten tool bolt to release ball joint taper-pin.

- Remove tool and disengage ball joint from vertical link.

12. Remove the vertical link and hub assembly from the vehicle.

13. Clean relevant parts.

Installation

1. Position vertical link and hub assembly to vehicle.

2. Fit upper ball joint to vertical link.

- Position ball joint taper-pin into vertical link.
- Fit and tighten nut.

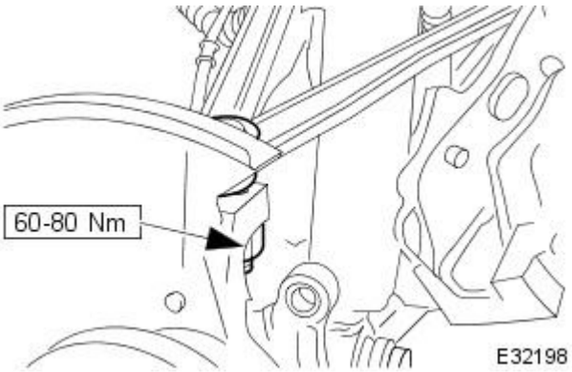

3. Fit lower ball joint to vertical link.

- Position ball joint taper-pin into vertical link.
- Fit and tighten nut.

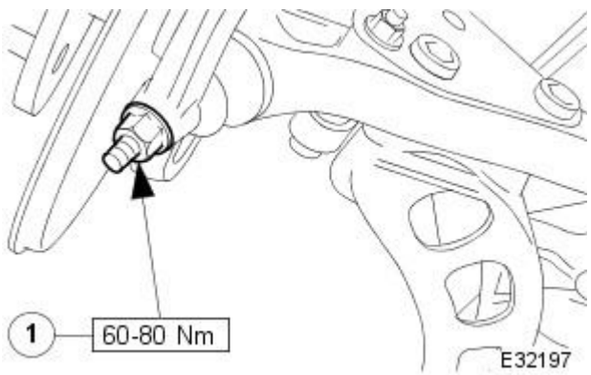

4. Fit tie-rod end to steering arm.

- Position tie-rod end, taper-pin into steering arm.
- Fit and tighten nut.

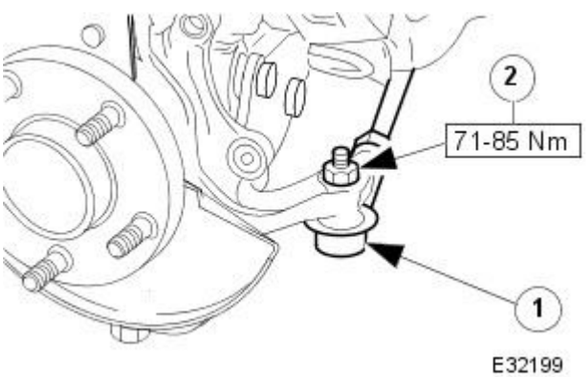

5. Fit wheel speed-sensor to vertical link.

- Align speed sensor.
- Fit and tighten bolt.

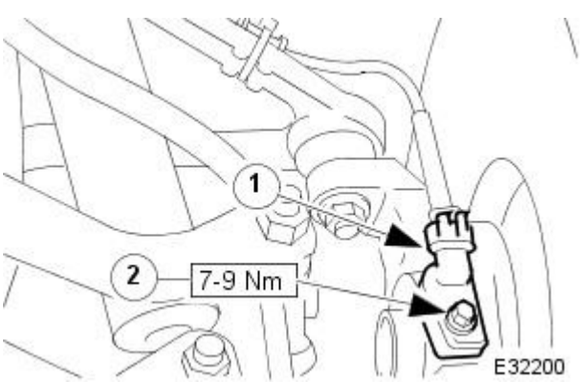

6. Fit brake disc. Refer to operation 70.10.12.

7. Fit wheel. Refer to section 204-04.

8. Remove stands and lower vehicle.

9. Remove paintwork protection covers.

Rear Suspension -

Lubricants, Fluids, Sealants and Adhesives

Unit	Specification
Loctite	270
Grease	Shell Retinax 'A'
Grease	Castrol 'NTR'

Torques

CAUTION: Replacement of nuts and bolts: Various thread-locking devices are used on nuts and bolts throughout the vehicle. These devices restrict the number of times a nut or bolt can be used. See section 100-00 for information.

Component	Nm
Bolt - ABS Sensor to Hub Carrier	8-10
Bolt - bump stop to body	26-34
Nut - differential stud to pendulum	149-201
Nut - hub	304-336
Nut - link assembly to differential	68-92
Bolt - link assembly to subframe mounting bracket	88-118
Bolt - monostrut to body bracket	88-118
Bolt - support plate to subframe mounting bracket	40-54
Nut - shock absorber lower-pivot	77-103
Nut - shock absorber upper-stud (non-adaptive damping)	30-40
Nut - shock absorber upper-stud (adaptive damping)	16-18
Nut - spring and shock absorber assembly, upper-mounting to body	17-23
Stud - spring and shock absorber assembly, upper-mounting to body	15-19
Bolt - stabilizer-bar bracket to wishbone-tie	40-54
Nut - stabilizer bar to link	30-40
Nut - stabilizer-bar link to wishbone	30-40
Bolt - suspension subframe to differential	88-118
Nut - suspension subframe front flange to subframe mounting bracket	68-92
Bolt - suspension subframe to mounting-bush bracket (through bush)	88-118
Bolt - suspension-subframe mounting-bush bracket to body	88-118
Tie-stud (front) - to differential	350-430
Nut - wishbone-tie to monostrut	77-103
Nut - wishbone-tie to differential	88-118
Nut - wishbone inner fulcrum	77-103
Nut - wishbone outer fulcrum	88-118

Rear Suspension - Rear Suspension

Description and Operation

Rear Suspension Components

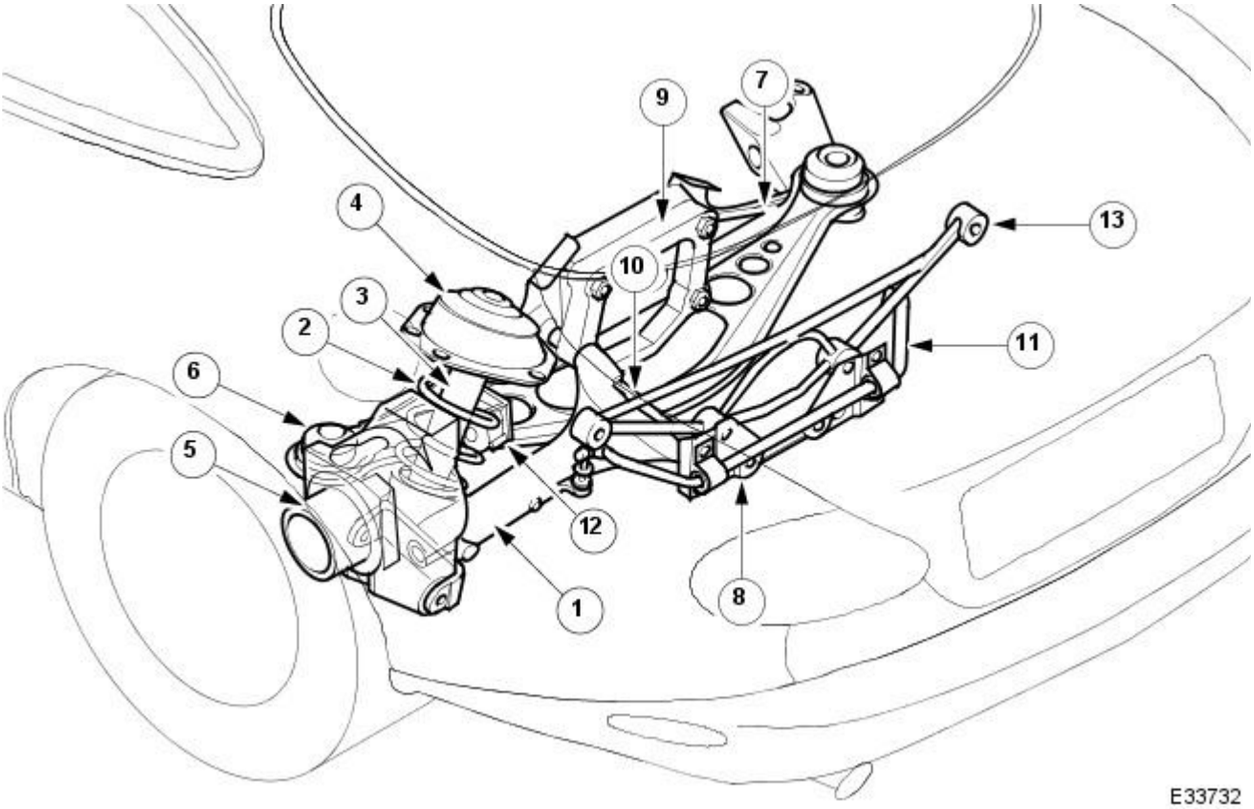

Parts List

Item	Part Number	Description
1	—	Lower wishbone
2	—	Suspension spring
3	—	Damper
4	—	Upper spring seat
5	—	Hub carrier
6	—	'A' Frame
7	—	Wide mounting frame
8	—	Wishbone tie assembly
9	—	Pendulum
10	—	Wishbone fulcrum pin
11	—	Stabilizer bar
12	—	Bump stop
13	—	Monostrut
14	—	Upper link assembly

The independent rear suspension uses co-axial spring and damper units, an 'A' frame, wishbone tie, pendulum assembly, wide mounting frame, monostrut and cast wishbones. Positive location of the suspension is provided by the 'A' frame, wide mounting bracket and monostrut. Each wishbone inner is pivoted on a fulcrum bolt which passes through the wishbone tie and pendulum assembly.

The wishbone tie and pendulum assemblies are installed at the front and rear of the final drive housing. The monostrut is also attached to wishbone tie assembly and two further tie rods are installed between the front of the 'A' frame and the top of the final drive housing.

The outer end of the wishbone is bolted to the hub carrier assembly using a pivot bolt, allowing for toe-in adjustment. When the pivot bolt is correctly seated in a groove on the wishbone arm, it has small clearance at the sides but full clearance at the top and bottom. Rotation of the bolt, with the eccentric constrained between vertical faces, causes the bolt shank to be moved in the horizontal plane, thus moving the hub carrier and effecting wheel alignment adjustment.

The axle-shaft acts as the the upper wishbone and the hub carrier as a vertical link.

A snubber is installed above the hub carrier to prevent the carrier contacting the vehicle body.

The suspension spring is co-axial with the damper unit and is installed between the wishbone integral spring seat and the upper spring seat mounted on the vehicle body. The damper lower end is attached to the wishbone by a bolt which forms the damper lower pivot.

A stabilizer bar is mounted at the rear of the wishbone tie assembly and its outer ends are connected to the wishbones by short links.

As the road wheel rises, the movement is transmitted through the hub carrier assembly to the wishbone and axle-shaft, which also rise. As the wishbone rises, it causes the suspension spring to be compressed and the damper to move through part of its travel. The spring absorbs the shock and the damper damps any unwanted spring frequencies.

When cornering, weight is transferred to the outer wheel with a natural tendency for the inner wheel to lift. The stabilizer bar helps to minimise this by transferring some of the apparent rise of the outer wheel to the inner wheel through the links to the wishbones, helping to provide a more level ride. Adaptive damping may also be specified as an option.

Enhanced Handling Pack

An optional enhanced handling pack, which can be either factory or dealer installed, is available for XK coupe vehicles fitted with adaptive damping only. If the handling pack is installed the high performance Brembo brakes and special wheels must also be installed, refer to the Description and Operation sections in 206-03 and 204-04 for information. The handling packs consist of special:

- Coil springs.
- Shock absorbers.
- Adaptive Damping Control Module (ADCM)
- Increased diameter, front stabilizer bar.
- Reduced diameter, rear stabilizer bar.
- Steering rack.
- Power steering control module.

Rear Suspension - Axle Bump Stop

Removal and Installation

Removal

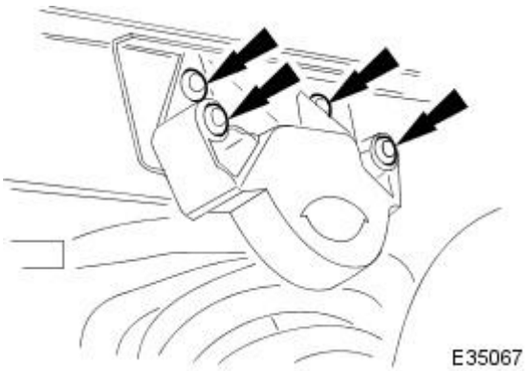

1. Raise rear of vehicle and support on stands.
2. Remove appropriate road wheel.
3. Remove bump stop bolts.
4. Remove bump stop from vehicle.

Installation

1. Position bump stop on vehicle.
2. Install bump stop bolts and tighten to 26-34 Nm.
3. Install road wheel.
4. Raise vehicle, remove stands and fully lower onto wheels.

Rear Suspension - Rear Suspension and Axle Assembly

Removal and Installation

Removal

1. CAUTION: Replacement of nuts and bolts: Various thread-locking devices are used on nuts and bolts throughout the vehicle. These devices restrict the number of times a nut or bolt can be used.
For additional information, refer to Section 100-00 General Information.

Raise the rear of the vehicle and support on axle stands.
For additional information, refer to Section 100-02 Jacking and Lifting.

2. Remove the rear wheels.
For additional information, refer to Section 204-04 Wheels and Tires.

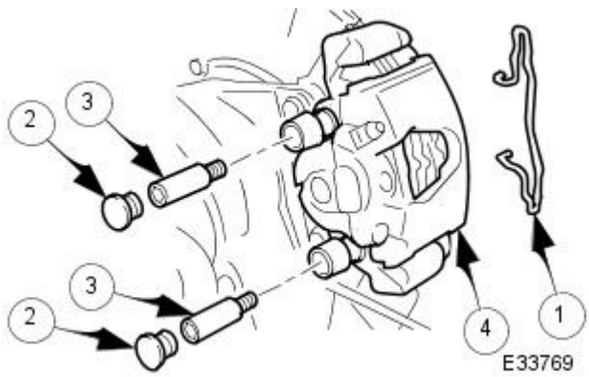

3. CAUTION: Do not suspend the caliper from the brake hose as this will damage the hose.

• NOTE: Right-hand shown, left-hand similar

Remove the brake calipers from the carriers.

1. Remove the caliper spring clip.
2. Remove the guide pin dust caps.
3. Slacken and withdraw the guide pins.
4. Remove the caliper from the carrier and secure to the suspension mounting bracket using a tie strap.

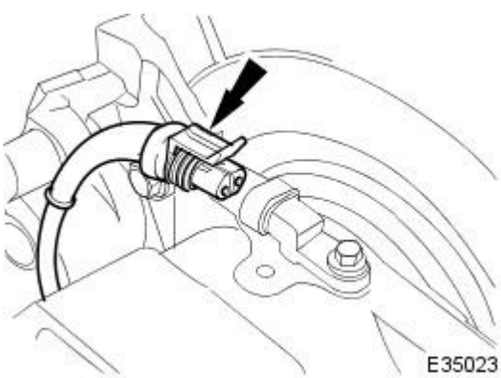

4. NOTE: Right-hand shown, left-hand similar

Disconnect the wheel speed sensor electrical connectors.

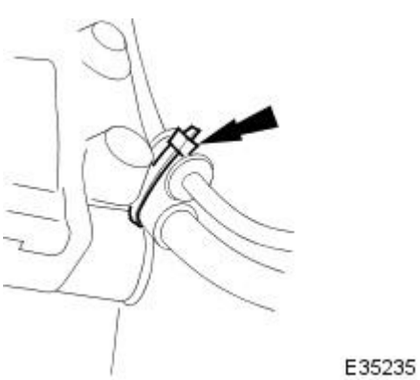

5. NOTE: Right-hand shown, left-hand similar

Remove and discard the tie straps securing the wheel speed sensor harnesses to the brake hose clips.

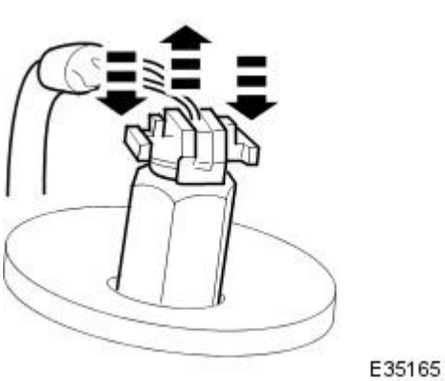

6. On vehicles with adaptive damping:

- Remove the top cover from the shock absorbers.
- Disconnect the shock absorber electrical connectors by pressing the lugs down and pulling the connectors up.

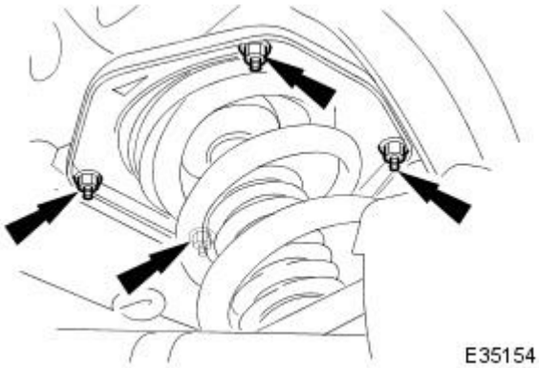

7. NOTE: Right-hand shown, left-hand similar

Remove shock absorber upper mounting plates to body nuts.

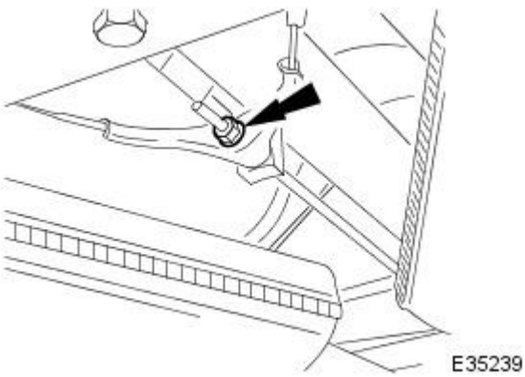

8. Fully slacken but do not remove the parking brake cable adjuster nut.

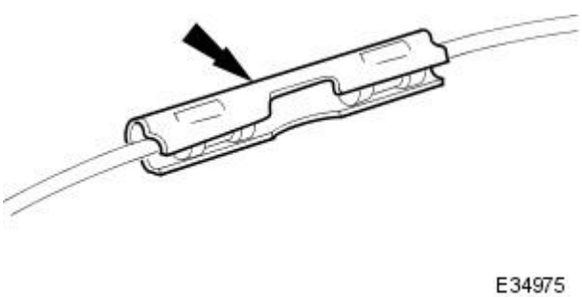

9. Release the parking brake cable from the connecting clip.

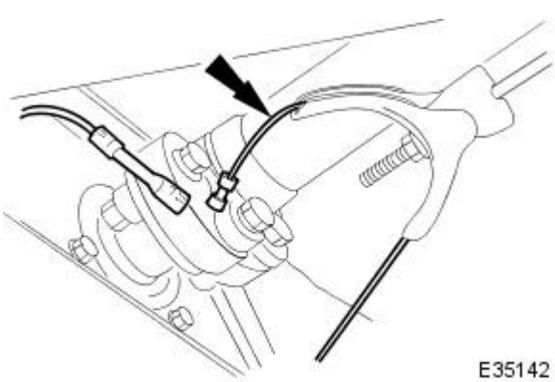

10. Withdraw the left-hand parking brake cable through the equalizer.

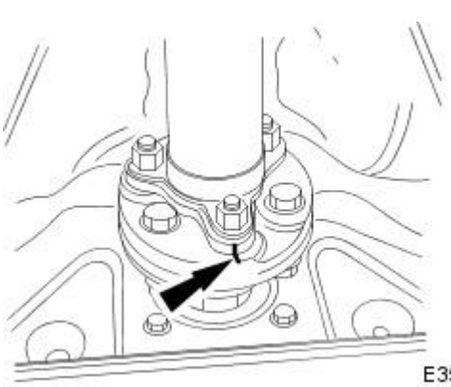

11. Mark the position of the drive shaft coupling to the flexible coupling.

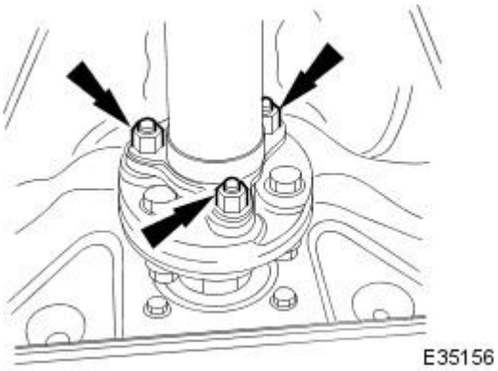

12. Remove the drive shaft from the differential drive coupling.

- Remove the drive shaft to differential drive coupling bolts.
- Carefully withdraw and lower the drive shaft from the differential coupling.

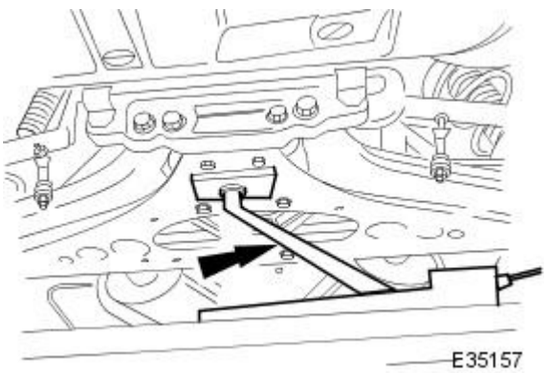

13. CAUTION: Position a suitable piece of wood between the jack and the rear suspension and axle assembly. Failure to follow this instruction may result in damage to the vehicle.

Support the rear suspension and axle assembly.

- Position a trolley jack under the rear suspension and axle assembly.
- Position a suitable piece of wood between the jack and the rear suspension and axle assembly.
- Raise the jack to take the weight of the rear suspension and axle assembly.

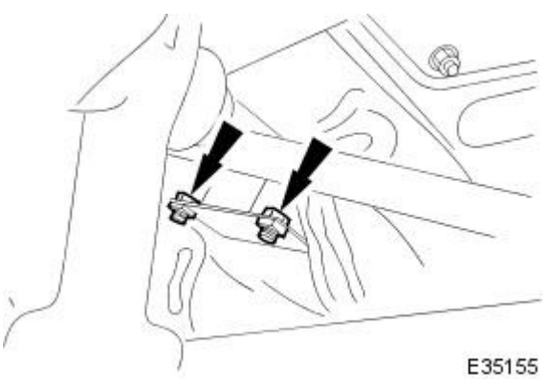

14. NOTE: Left-hand shown, right-hand similar

Remove the exhaust mounting to suspension bracket bolts.

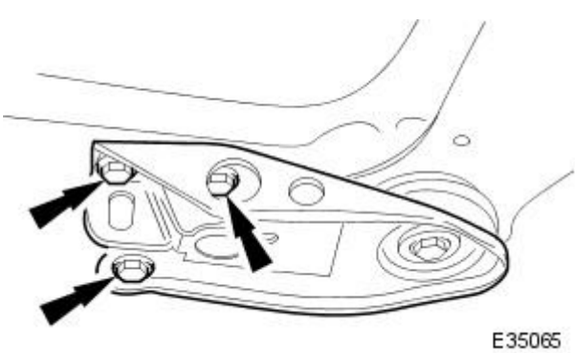

15. NOTE: Right-hand shown, left-hand similar

Remove and discard the subframe front mounting brackets to body bolts.

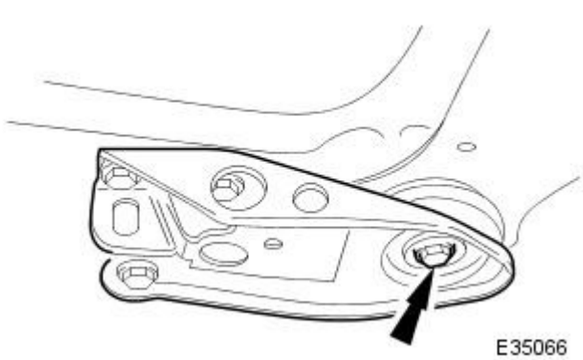

16. NOTE: Right-hand shown, left-hand similar

Remove the subframe front mounting brackets.

- Remove and discard the mounting bracket to subframe bolts.
- Remove the front mounting bracket.

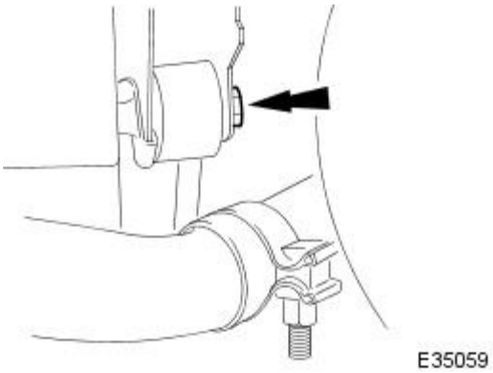

17. NOTE: Left-hand shown, right-hand similar

Remove differential strut upper mounting to body bracket securing bolts.

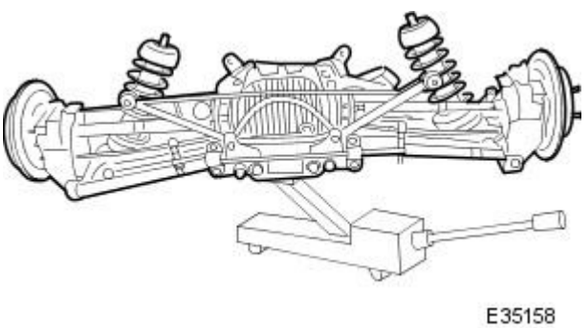

18. WARNING: With assistance, support the rear suspension and axle assembly during removal. Failure to follow this instruction may result in personal injury.

Remove the rear suspension and axle assembly.

- Ensure that the hydraulic pipes, brake calipers, harnesses and the drive shaft will not obstruct the rear suspension and axle assembly during removal.
- Carefully lower the rear suspension and axle assembly and traverse clear of vehicle.

19. Retrieve the subframe mounting bush shims.

20. With assistance, position the rear suspension and axle assembly on to a bench.

21. Clean the subframe mounting bushes and corresponding body locations.

Installation

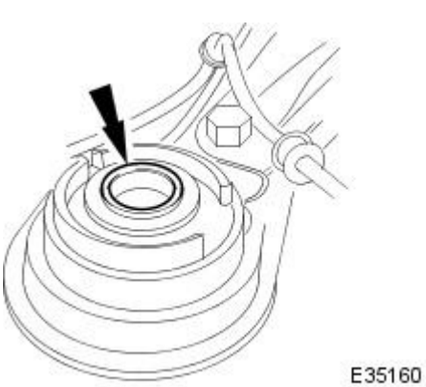

1. Apply a thin coat of grease to the subframe bushes and place the shims in position.

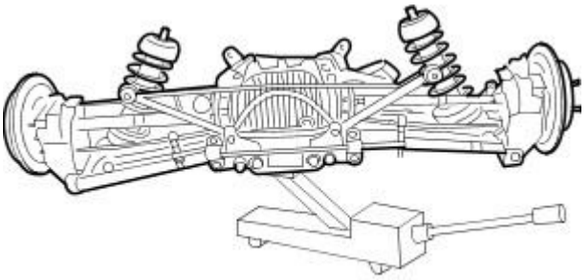

E35158

2. WARNING: With assistance, support the rear suspension and axle assembly during installation. Failure to follow this instruction may result in personal injury.

CAUTION: Position a suitable piece of wood between the jack and the rear suspension and axle assembly. Failure to follow this instruction may result in damage to the vehicle.

Position the rear suspension and axle assembly on to a trolley jack.

3. WARNING: With assistance, support the rear suspension and axle assembly during installation. Failure to follow this instruction may result in personal injury.

Position the rear suspension and axle assembly under the vehicle.

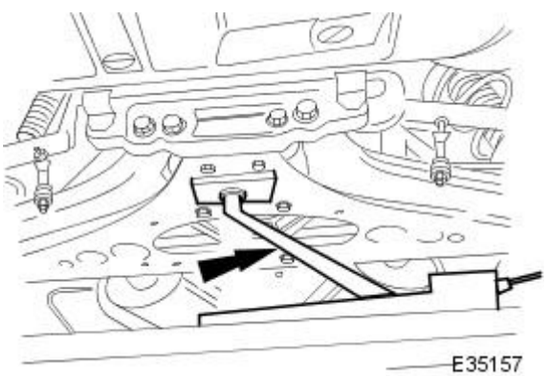

E35157

4. WARNING: With assistance, support the rear suspension and axle assembly during installation. Failure to follow this instruction may result in personal injury.

Raise the trolley jack to position the rear suspension and axle assembly to the vehicle.

5. NOTE: Right-hand shown, left-hand similar

Install the mounting brackets.

- Position the mounting brackets to the subframe.
- Install but do not tighten new bolts to the mounting bracket .

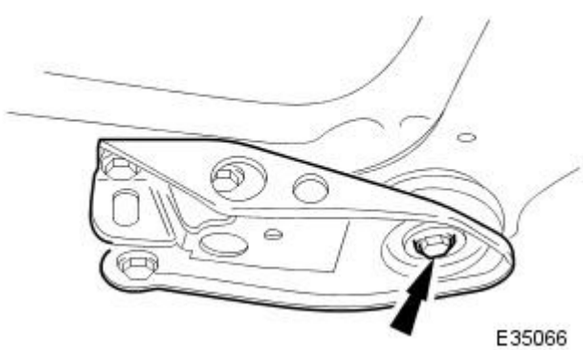

E35066

6. NOTE: Right-hand shown, left-hand similar

Install new outer bolts to the mounting bracket.

- Tighten to 41-54 Nm.

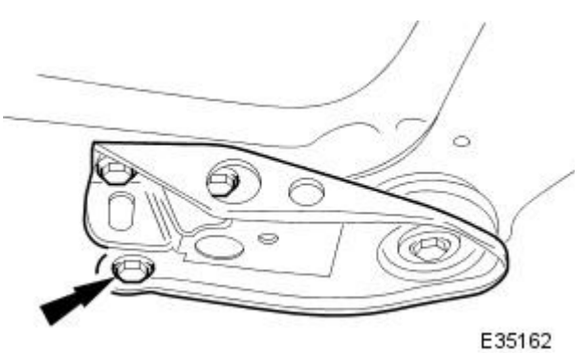

E35162

7. NOTE: Right-hand shown, left-hand similar

Install new inner mounting bracket bolts.

- Tighten to 88-118 Nm.

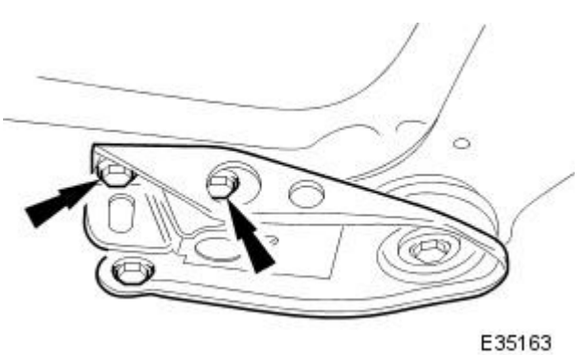

E35163

8. NOTE: Right-hand shown, left-hand similar

Tighten to 88-118 Nm.

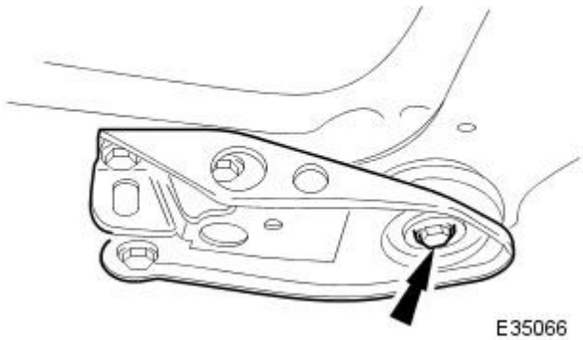

9. NOTE: Right-hand shown, left-hand similar

Install new differential strut to body bracket bolts.

- Tighten to 68-92 Nm.

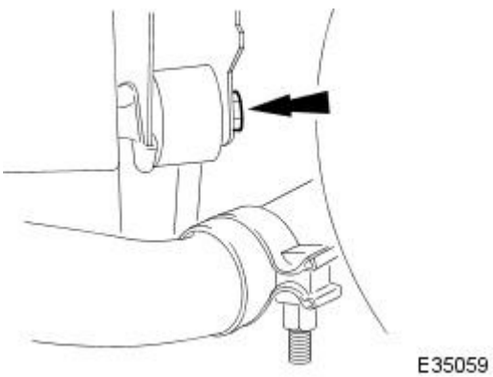

10. Lower and remove trolley jack.

11. Attach the drive shaft to the flexible coupling.

- Align the marks previously painted on drive shaft and flexible coupling.
- Install new drive shaft coupling bolts and nuts.

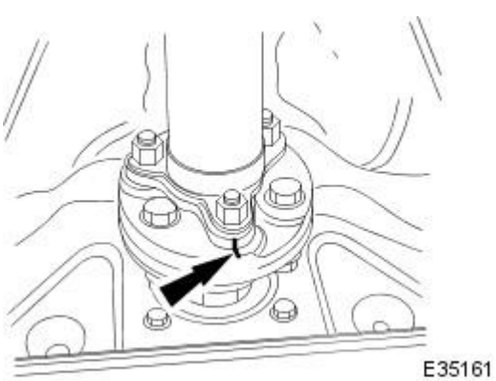

12. Tighten to 76-88 Nm.

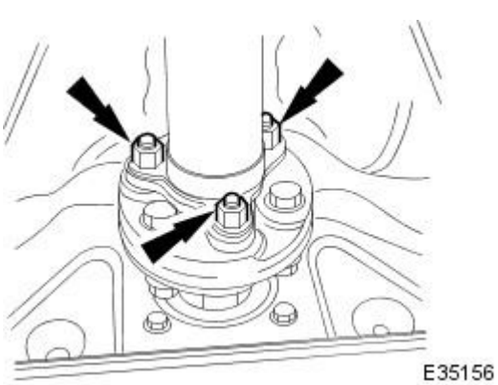

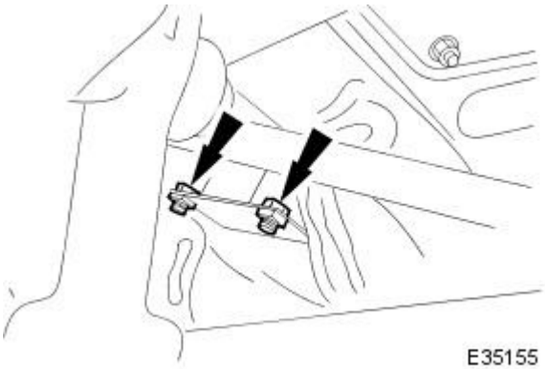

13. Install the exhaust brackets.

- Position exhaust mounting bracket on subframe.
- Install bolts and nuts.
- Tighten to 22-28 Nm.

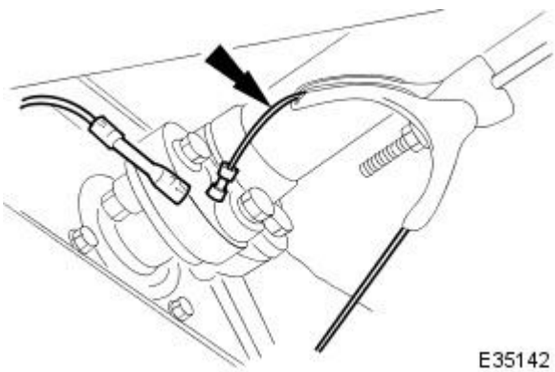

14. Route the left hand parking brake cable through the equalizer.

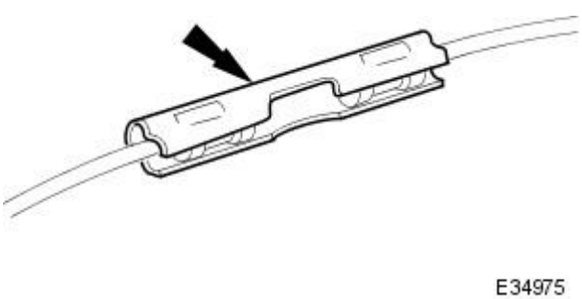

15. Install the parking brake cable in to the connecting clip.

16. Adjust the parking brake cable. Refer to 70.35.10.

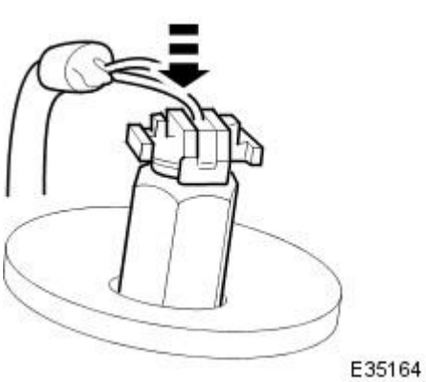

17. CAUTION: Make sure the adaptive damping electrical connector is correctly aligned. Failure to follow these instructions may cause damage to the electrical connector.

On vehicles with adaptive damping:

- Connect the shock absorber electrical connector, ensuring the electrical connector key locates in the socket keyway.

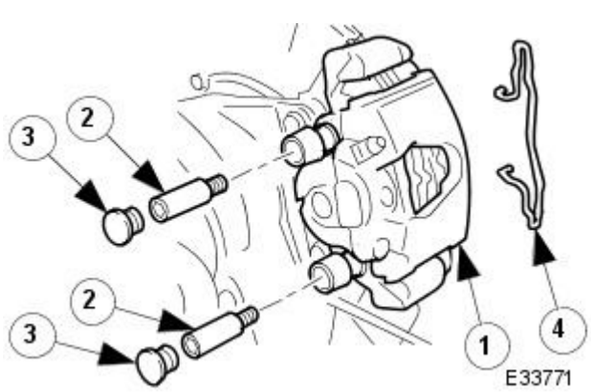

18. Install the brake caliper on to the carrier.

1. Position the caliper assembly on to the carrier.
2. Install the guide pins and tighten to 25-30 Nm.
3. Install the dust caps.
4. Install the brake caliper spring clip.

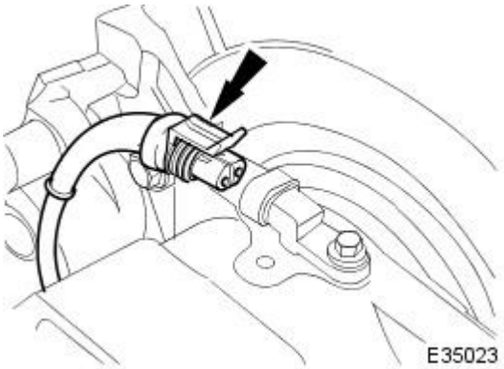

19. Connect the wheel speed sensor electrical connector.

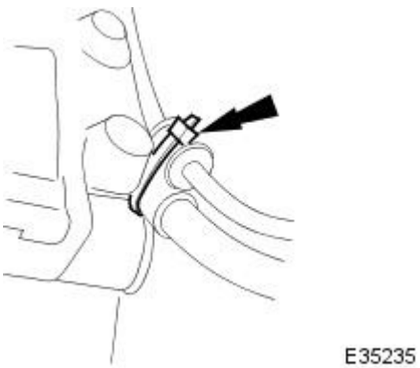

20. Using a new tie strap, secure the wheel speed sensor harness to the brake hose clip.

21. Install the rear wheels.
For additional information, refer to Section 204-04 Wheels and Tires.

22. Remove the axle stands and lower the vehicle.
For additional information, refer to Section 100-02 Jacking and Lifting.

23. Check and adjust the rear wheel alignment as necessary.
For additional information, refer to Section 204-00 Suspension System - General Information.

Rear Suspension - Rear Shock Absorber

Removal and Installation

Special Tool(s)	
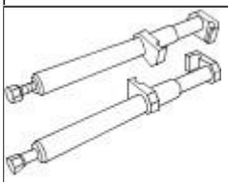 E36460	Spring Compressors 204-179 (JD 199)
E36461	Spring Retaining Straps 204-179-1 (JD 199-1)

Removal

1. CAUTION: Replacement of nuts and bolts: Various thread-locking devices are used on nuts and bolts throughout the vehicle. These devices restrict the number of times a nut or bolt can be used.
For additional information, refer to Section 100-00 General Information.

Raise the rear of the vehicle and support on axle stands.
For additional information, refer to Section 100-02 Jacking and Lifting.

2. Remove the relevant rear wheel.
For additional information, refer to Section 204-04 Wheels and Tires.

3. CAUTION: Do not suspend the caliper from the brake hose as this will damage the hose.

Remove the brake caliper from the carrier.

1. Remove the caliper spring clip.
2. Remove the guide pin dust caps.
3. Slacken and withdraw the guide pins.
4. Remove the caliper from the carrier and secure to the suspension mounting bracket using a tie strap.

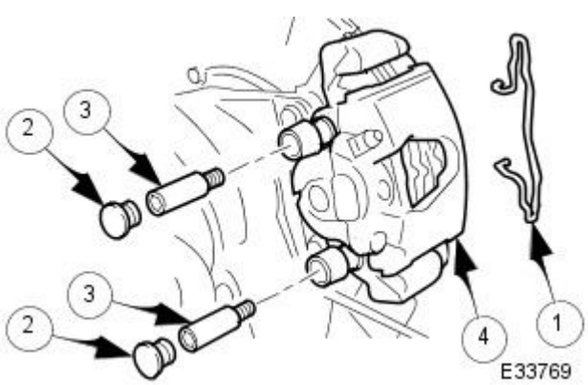

E33769

4. Disconnect the wheel speed sensor electrical connector.

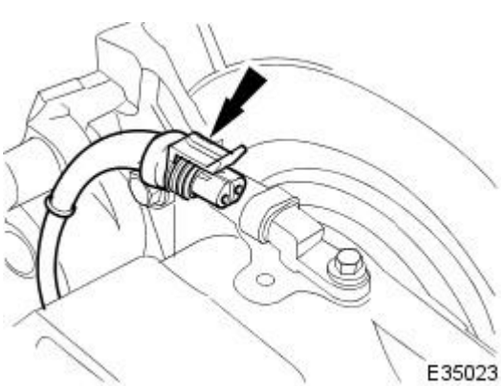
E35023

5. Remove and discard the tie strap securing the wheel speed sensor harness to the brake hose clip.

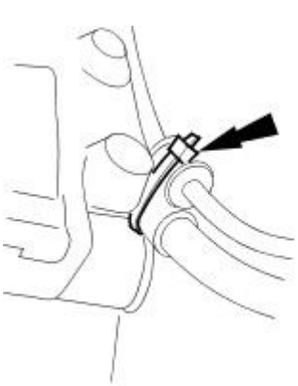
E35235

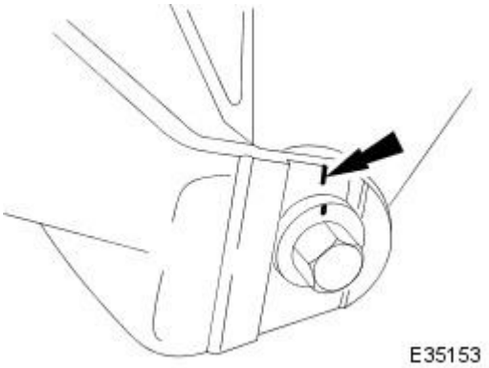

6. Mark the wishbone at the pivot pin eccentric flange marker to aid installation.

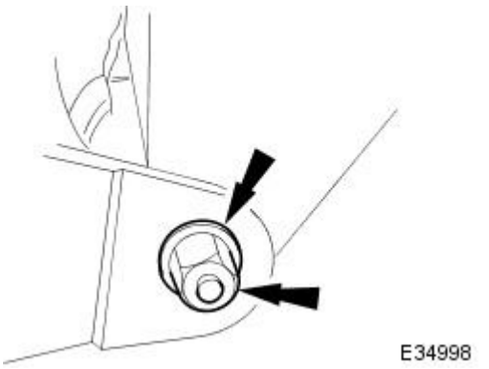

7. Remove the pivot pin nut and washer.

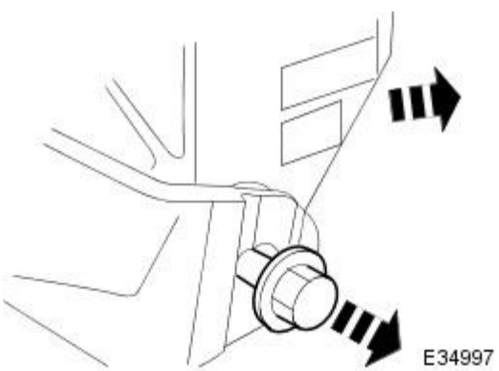

8. CAUTION: To prevent damage to the parking brake cable, the hub carrier must be supported on removal from the wishbone.

Remove the hub carrier from the wishbone.

- Remove the pivot pin from the hub carrier.
- Withdraw the hub carrier and support on a block of wood.

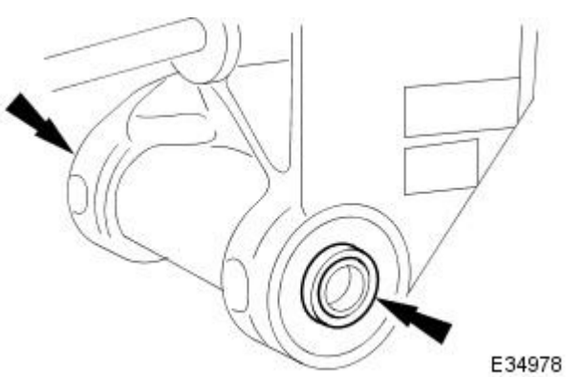

9. CAUTION: Note the position of the shims during removal. They must be returned to their original position during installation.

Noting their positions, remove the shim from each end of the pivot pin sleeve.

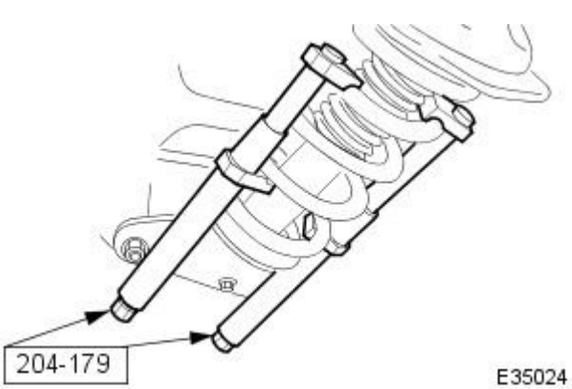

10. WARNINGS:

ENSURE THE SPECIAL TOOLS ARE POSITIONED DIAMETRICALLY OPPOSITE ON THE SPRING AND THE ARMS ARE CORRECTLY SEATED .

WHEN COMPRESSING THE SPRING, TIGHTEN THE SPECIAL-TOOL ADJUSTMENT BOLTS EVENLY.

Compress the spring.

- Install and align the special tools 204-179 diametrically opposite on the spring.
- Evenly tighten the special tool tensioning bolts to compress the spring.

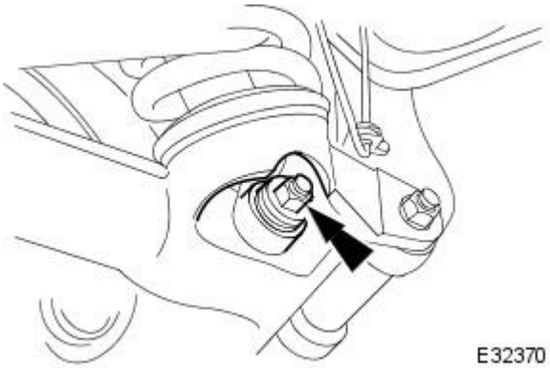

11. Remove the shock absorber to wishbone mounting nut and bolt.

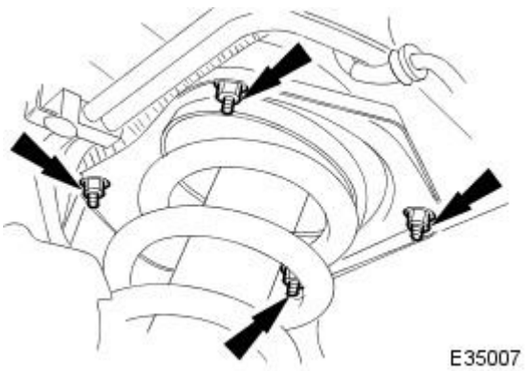

12. Remove the nuts securing the shock absorber and spring upper mounting to the body.

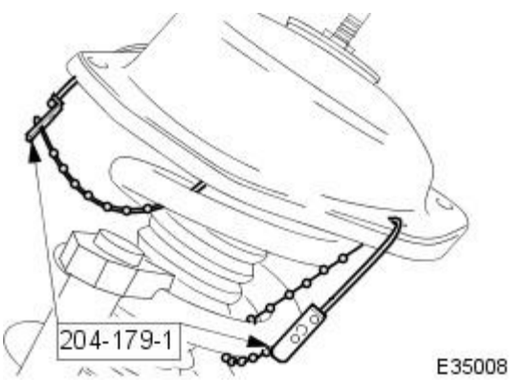

13. Using the special tools 204-179-1, secure the upper mounting to the spring.

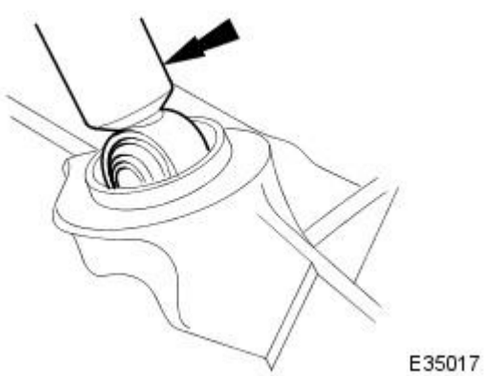

14. Using a jack, retract the shock absorber through the wishbone aperture.

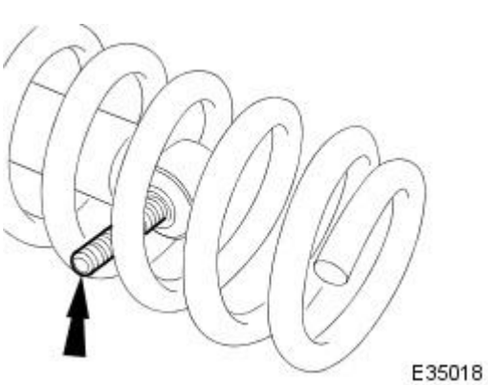

15. Position a bolt through the spring coils and shock absorber lower-bush, to temporarily locate the shock absorber.

16. Partially lower the jack for access to the top of the shock absorber.

17. On vehicles with adaptive damping:

- Disconnect the shock absorber electrical connector by pressing the lugs down and pulling the connector up.

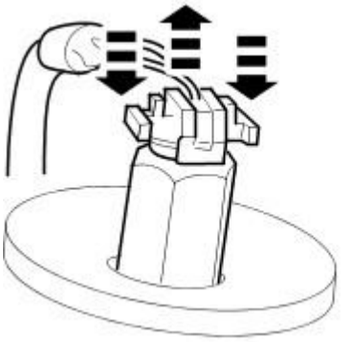

E35165

18. Lower and remove the jack.

19. Remove the shock absorber and spring assembly from the vehicle and place the assembly on a work bench.

20. Clean the upper mounting spring location.

21. Remove the pigtail seat and clean the wishbone lower spring location.

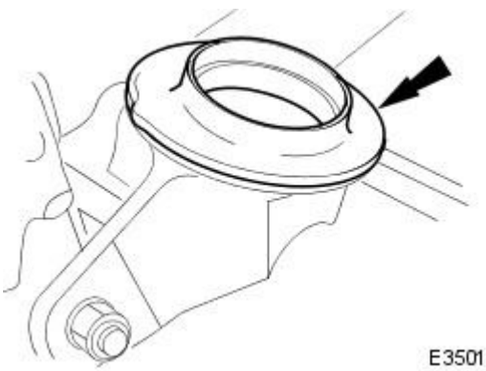

E35011

22. With assistance, manually compress the shock absorber and withdraw the bolt from the spring coils.

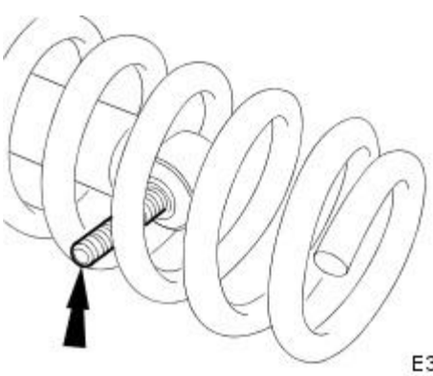

E35018

23. Remove the shock absorber from the upper mounting.

- Position a wrench on the shock absorber shaft flats to prevent rotation (wrench in socket on vehicles with adaptive damping).
- Remove the shock absorber upper retaining nut.
- Remove the upper washer and isolator.

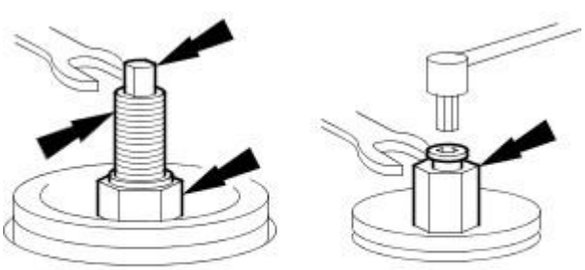

E35166

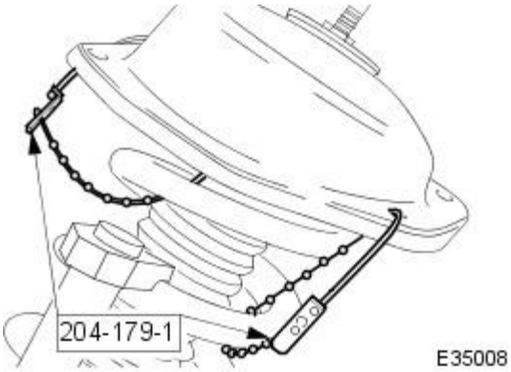

24. Remove the special tools 204-179-1 and remove the upper mounting from the spring.

25. Remove the shock upper mounting assembly from the spring.

- Remove the spring upper isolator.
- Remove the upper spring pan.
- Remove the packing ring.

Installation

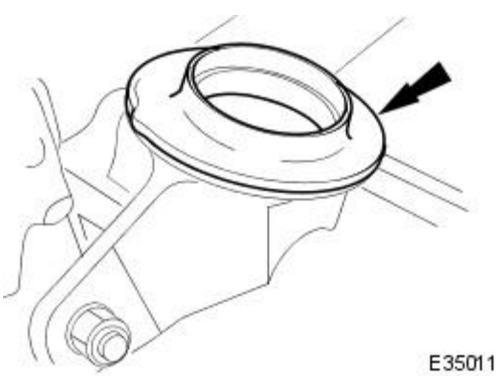

1. Install the spring pigtail lower seat on to the wishbone.

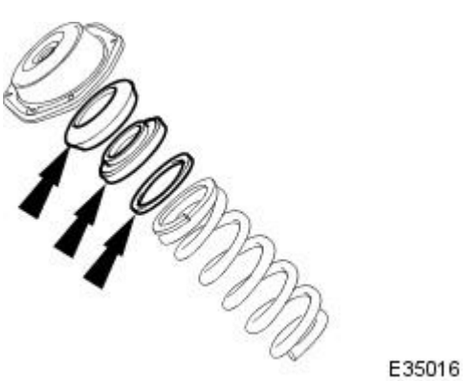

2. Install the spring in the upper mounting.

- Install the spring upper isolator.
- Install the upper spring pan.
- Install the packing ring.

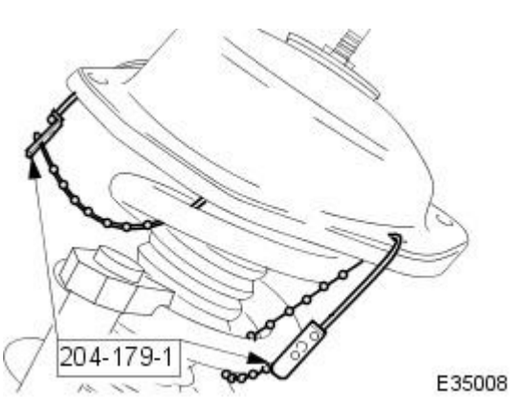

3. Ensuring the correct orientation, secure the upper mounting to the spring using the special tools 204-179-1.

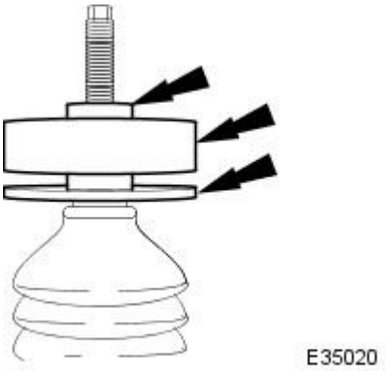

4. Position the spring upper mounting assembly on to the shock absorber.

- Apply a thin coat of grease to the upper mounting bush.
- Ensure that the washer, lower isolator and bush are correctly positioned on the shock absorber shaft.
- Position the shock absorber shaft in the upper mounting.

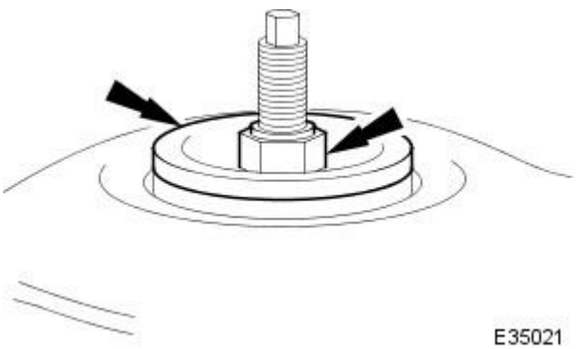

5. Secure the top of the shock absorber to the upper mounting.

- Install the spring upper isolator.
- Install the upper washer.
- Install but do not tighten the locknut on to the shock absorber.

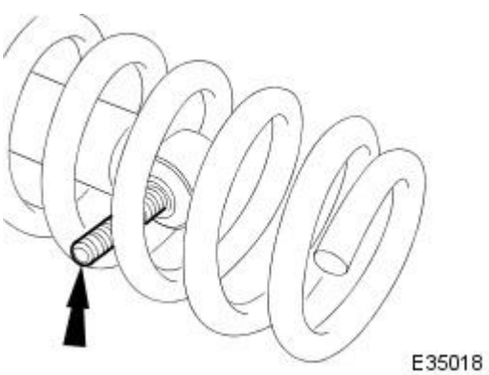

6. Manually retract the shock absorber and place a bolt through the spring coils and the shock absorber lower-bush.

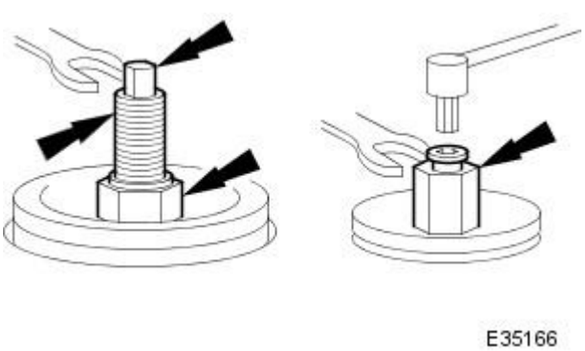

7. Secure the shock absorber to the upper mounting.

- Position a wrench on the shock absorber shaft flats to prevent rotation (wrench in socket on vehicles with adaptive damping).
- Tighten the shock absorber upper lock nut to 30-40 Nm (16-18 Nm on vehicles with adaptive damping).

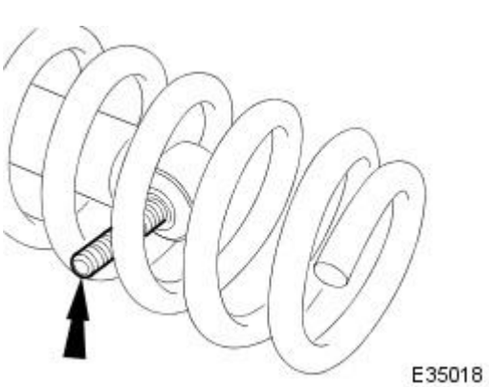

8. Position the shock absorber and spring assembly to the vehicle.

9. With assistance, manually retract the shock absorber and remove the temporary securing bolt.

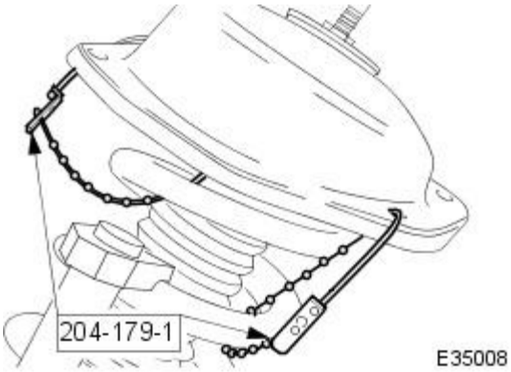

10. Remove the special tools 204-179-1.

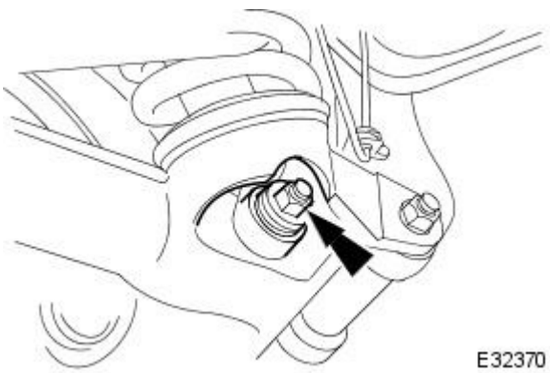

11. Align the shock absorber lower bush to the wishbone and install the mounting bolt.

1. Install but do not tighten the nut.

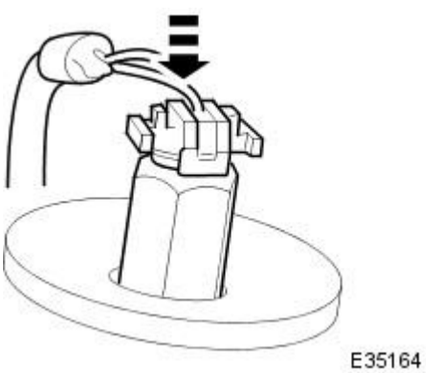

12. CAUTION: Make sure the adaptive damping electrical connector is correctly aligned. Failure to follow these instructions may cause damage to the electrical connector.

On vehicles with adaptive damping:

- Connect the shock absorber electrical connector, ensuring the electrical connector key locates in the socket keyway.

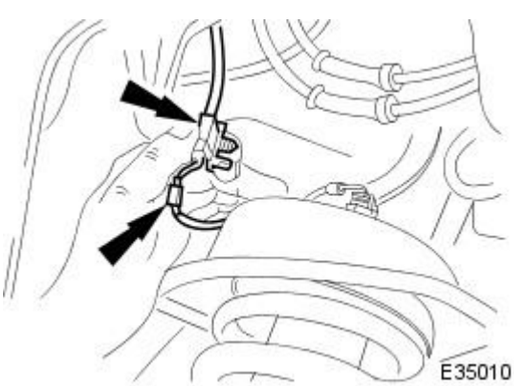

13. Seat the upper mounting in the body location.

1. If adaptive damping is installed, ensure the harness is correctly positioned.

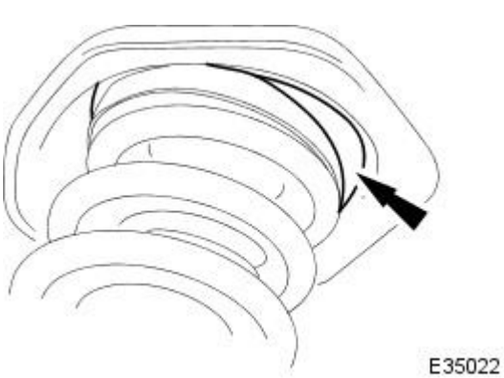

14. Ensuring that the spring is seated on the isolator and spring pan, position the upper spring pan on to the body studs.

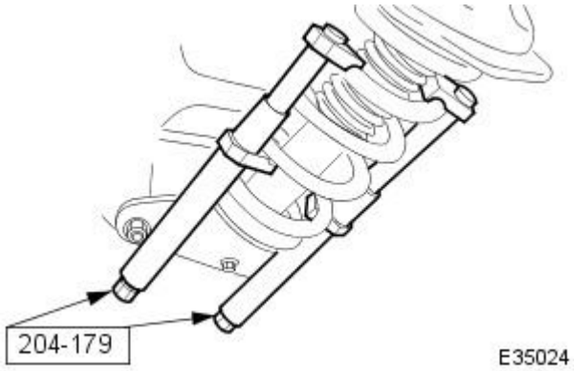

15. Release the spring tension.

- Ensuring that the spring is correctly located, evenly slacken the adjuster bolts on the special tools 204-179.

16. Remove the special tools 204-179.

17. Fully seat and secure the upper spring pan to the body.

- Ensure the spring pan is correctly seated in the body location.
- Install the nuts securing the spring pan to the body studs.
- Tighten to 17-23 Nm.

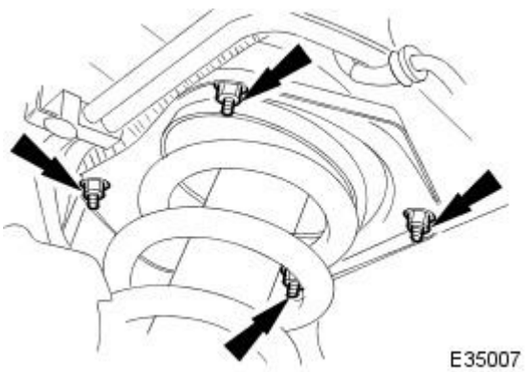

18. Tighten to 80-100 Nm.

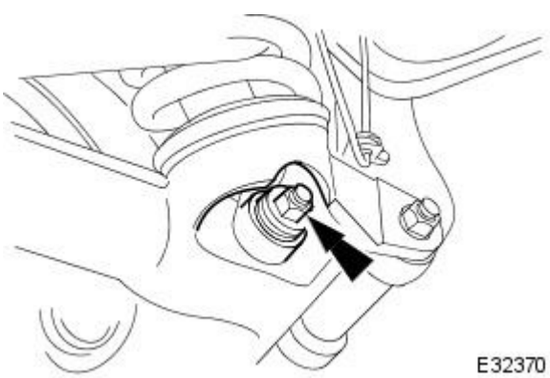

19. Install the shims on the pivot pin sleeve in the positions noted during removal.

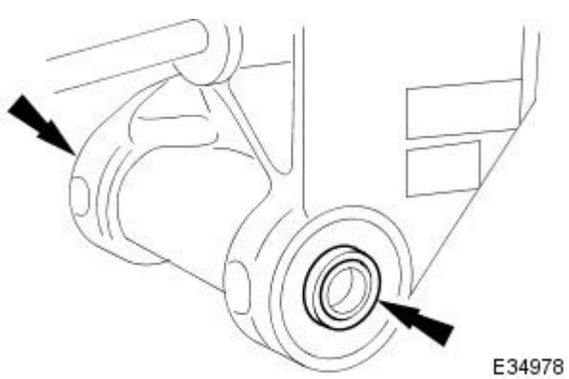

20. Install the hub assembly to the wishbone assembly.

- Position the hub and carrier to the wishbone.
- Install the pivot pin ensuring that the eccentric flange correctly seats in the wishbone groove.

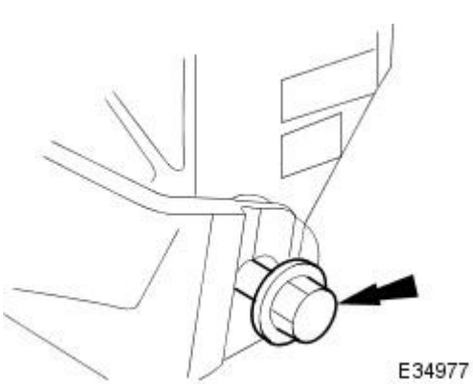

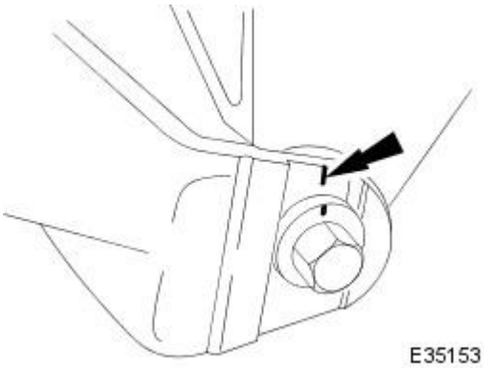

21. Install the pivot pin nut.

- Align the marker on the pivot pin flange with the mark made on wishbone.
- Install the nut on to the pivot pin and, ensuring the pin position is not disturbed, tighten the nut to 88-118 Nm.

22. Release the tie strap securing the brake caliper to the suspension mounting bracket.

23. Install the brake caliper on to the carrier.

1. Position the caliper assembly on to the carrier.
2. Install the guide pins and tighten to 25-30 Nm.
3. Install the dust caps.
4. Install the brake caliper spring clip.

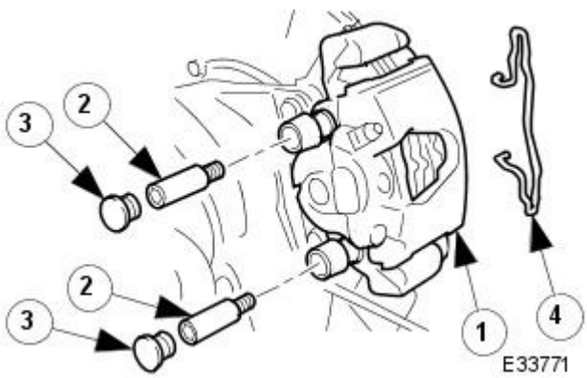

24. Connect the wheel speed sensor electrical connector.

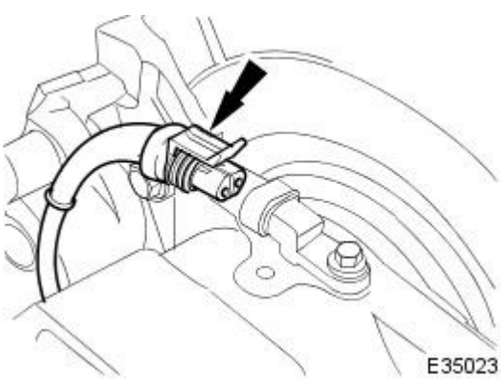

25. Using a new tie strap, secure the wheel speed sensor harness to the brake hose clip.

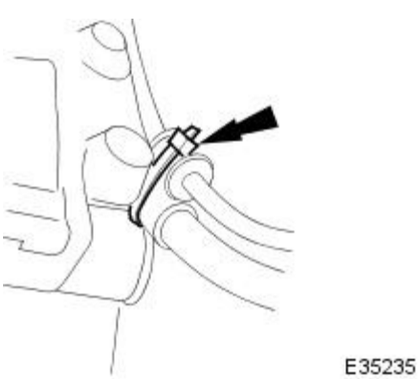

26. Install the rear wheel.
For additional information, refer to Section 204-04 Wheels and Tires.

27. Remove the axle stands and lower the vehicle.
For additional information, refer to Section 100-02 Jacking and Lifting.

28. Check and adjust the rear wheel alignment as necessary.
For additional information, refer to Section 204-00 Suspension System - General Information.

Published: 11-May-2011

Rear Suspension - Shock Absorber Lower Bushing

Removal and Installation

Special Tool(s)	
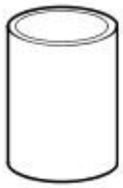 E52622	Bushing Remover / installer 204-335
E52621	Bushing remover 204-533
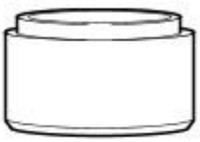 E52620	Bushing installer 204-534

Removal

1. Mark the orientation of the shock absorber eye in relation to the lower suspension arm.
2. Remove the rear shock absorber.
   For additional information, refer to: Rear Shock Absorber (204-02 Rear Suspension, Removal and Installation).
3. NOTE: With assistance make sure the tool is aligned.

   Using the special tool, support the shock absorber.

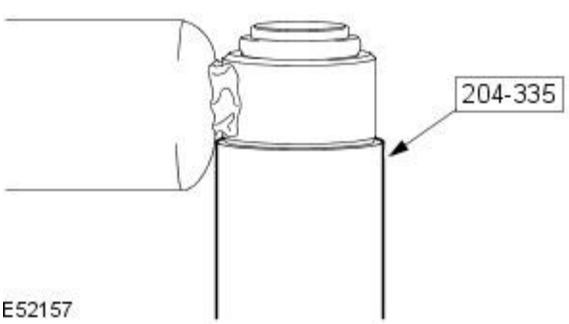

4. NOTE: With assistance make sure the tool is aligned.

   Position and align the special tool to the shock absorber bush.

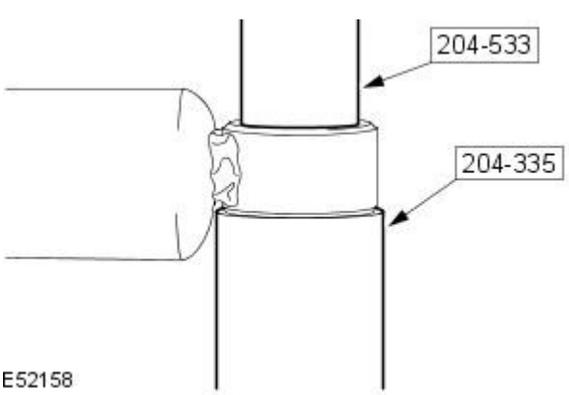

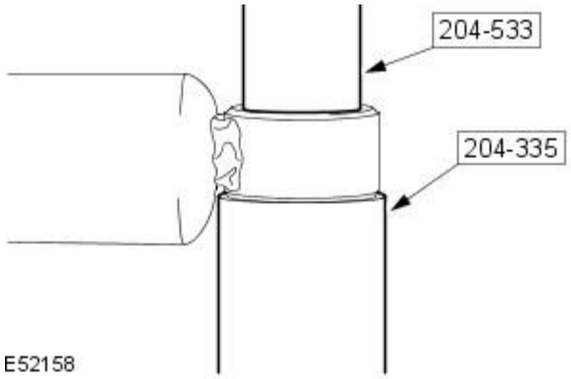

5. NOTE: With assistance make sure the tool is aligned.

Using special tools, slowly push the bush from the shock absorber.

Installation

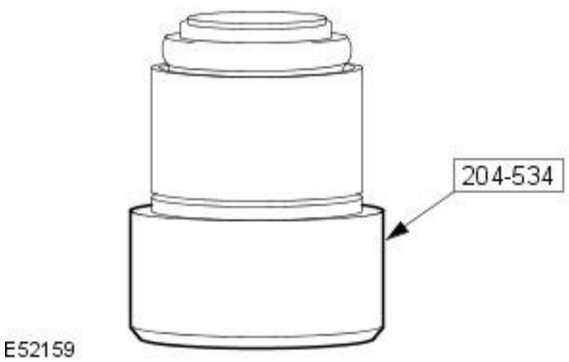

1. NOTE: Make sure the bush is clean and free from oil or grease.

• NOTE: Use a suitable lubricant to allow the bush to locate into the special tool.

Locate the new bush in the special tool.

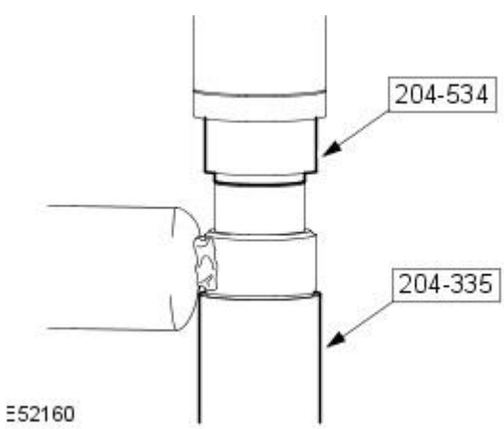

2. NOTE: Make sure the damper is clean and free from grease or oil and is not damaged prior to pushing in the new bush.

• NOTE: Make sure the shock absorber and bush are placed in the correct orientation.

Using the special tools, align the bush to the shock absorber.

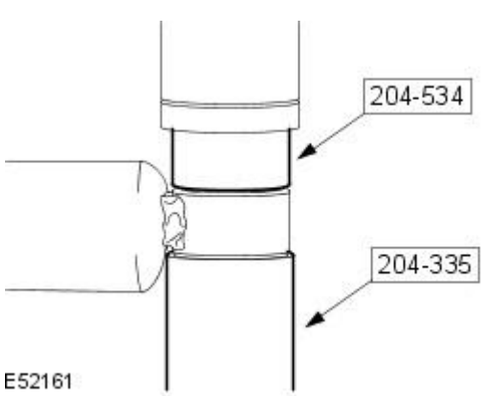

3. NOTE: Make sure correct alignment is maintained.

Slowly push the bush into the shock absorber until the tool reaches the stop.

4. Install the rear shock absorber.
For additional information, refer to: Rear Shock Absorber (204-02 Rear Suspension, Removal and Installation).

Rear Suspension - Spring

Removal and Installation

Special Tool(s)	
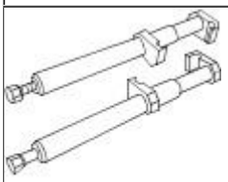 E36460	Spring Compressors 204-179 (JD 199)
E36461	Spring Retaining straps 204-179-1 (JD 199-1)

Removal

1. CAUTION: Replacement of nuts and bolts: Various thread-locking devices are used on nuts and bolts throughout the vehicle. These devices restrict the number of times a nut or bolt can be used.
For additional information, refer to Section 100-00 General Information.

Raise the rear of the vehicle and support on axle stands.
For additional information, refer to Section 100-02 Jacking and Lifting.

2. Remove the relevant rear wheel.
For additional information, refer to Section 204-04 Wheels and Tires.

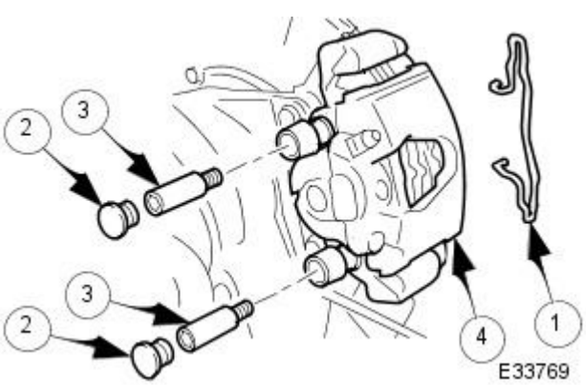

3. CAUTION: Do not suspend the caliper from the brake hose as this will damage the hose.

Remove the brake caliper from the carrier.

1. Remove the caliper spring clip.
2. Remove the guide pin dust caps.
3. Slacken and withdraw the guide pins.
4. Remove the caliper from the carrier and secure to the suspension mounting bracket using a tie strap.

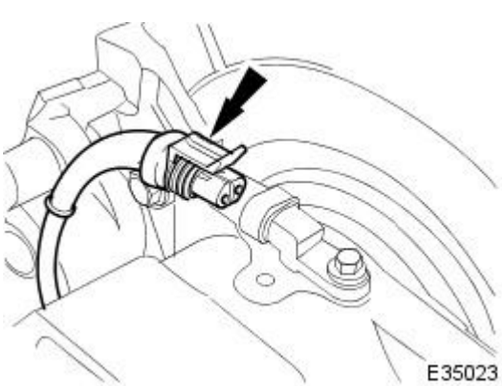

4. Disconnect the wheel speed sensor electrical connector.

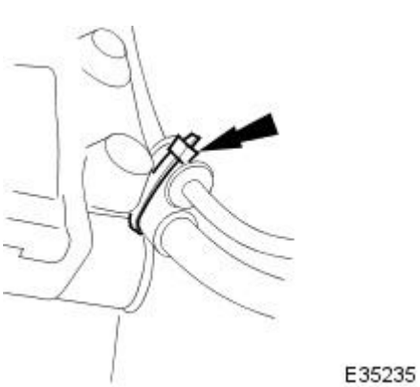

5. Remove and discard the tie strap securing the wheel speed sensor harness to the brake hose clip.

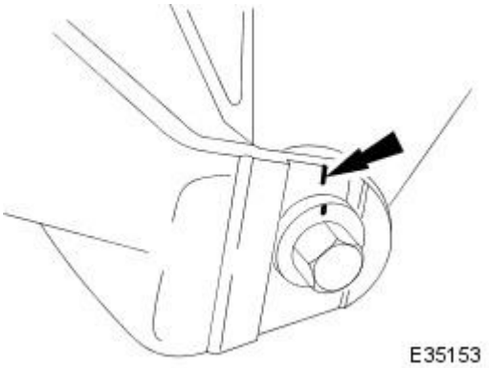

6. Mark the wishbone at the pivot pin eccentric flange marker to aid installation.

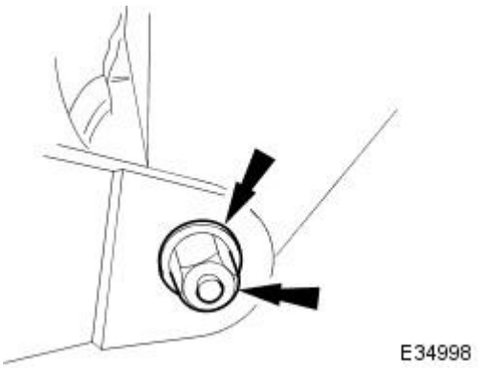

7. Remove the pivot pin nut and washer.

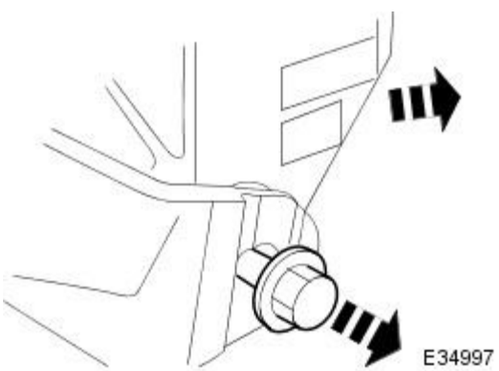

8. CAUTION: To prevent damage to the parking brake cable, the hub carrier must be supported on removal from the wishbone.

Remove the hub carrier from the wishbone.

- Remove the pivot pin from the hub carrier.
- Withdraw the hub carrier and support on a block of wood.

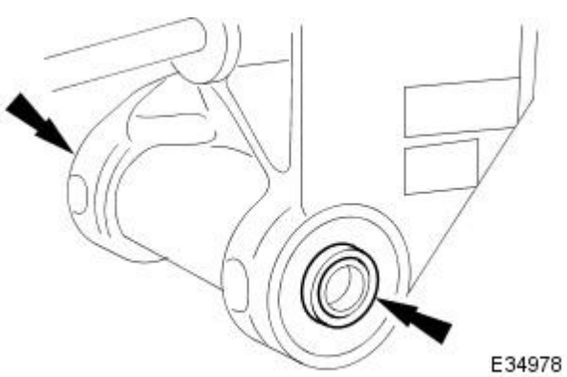

9. CAUTION: Note the position of the shims during removal. They must be returned to their original position during installation.

Noting their positions, remove the shim from each end of the pivot pin sleeve.

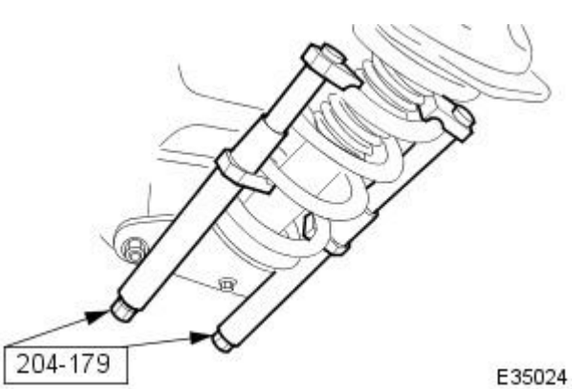

10. WARNINGS:

ENSURE THE SPECIAL TOOLS ARE POSITIONED DIAMETRICALLY OPPOSITE ON THE SPRING AND THE ARMS ARE CORRECTLY SEATED .

WHEN COMPRESSING THE SPRING, TIGHTEN THE SPECIAL-TOOL ADJUSTMENT BOLTS EVENLY.

Compress the spring.

- Install and align the special tools 204-179 diametrically opposite on the spring.
- Evenly tighten the special tool tensioning bolts to compress the spring.

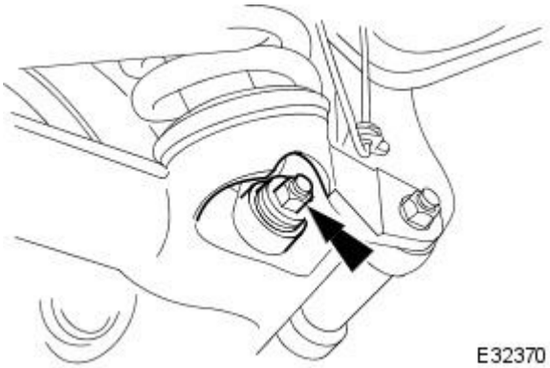

11. Remove the shock absorber to wishbone mounting nut and bolt.

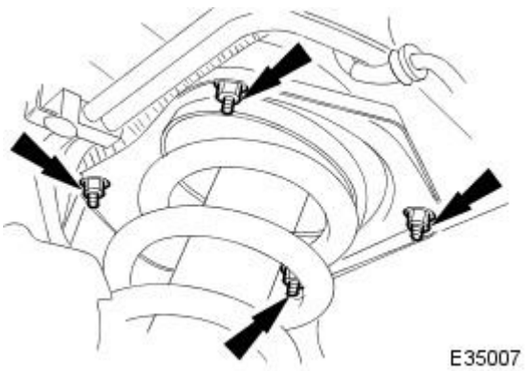

12. Remove the nuts securing the shock absorber and spring upper mounting to the body.

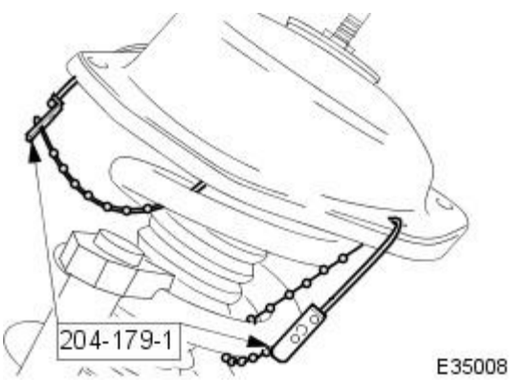

13. Using the special tools 204-179-1, secure the upper mounting to the spring.

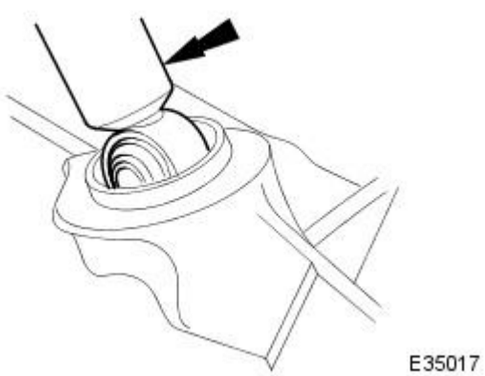

14. Using a jack, retract the shock absorber through the wishbone aperture.

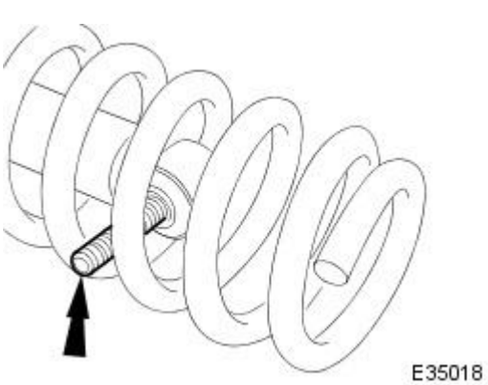

15. Position a bolt through the spring coils and shock absorber lower-bush, to temporarily locate the shock absorber.

16. Partially lower the jack for access to the top of the shock absorber.

17. On vehicles with adaptive damping:

- Disconnect the shock absorber electrical connector by pressing the lugs down and pulling the connector up.

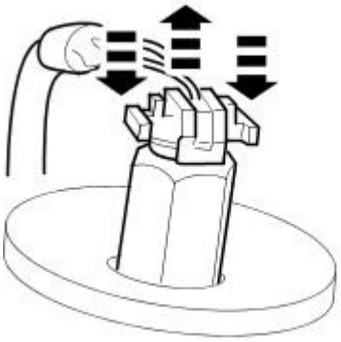

E35165

18. Lower and remove the jack.

19. Remove the shock absorber and spring assembly from the vehicle and place the assembly on a work bench.

20. Clean the upper mounting spring location.

21. Remove the pigtail seat and clean the wishbone lower spring location.

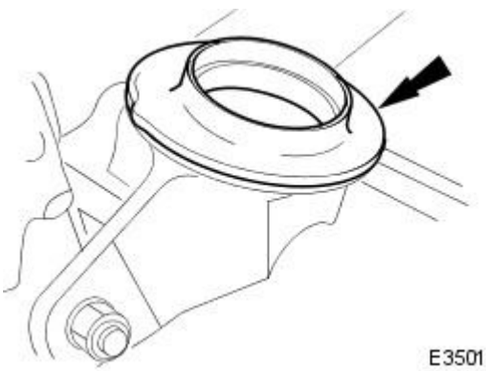

E35011

22. With assistance, manually compress the shock absorber and withdraw the bolt from the spring coils.

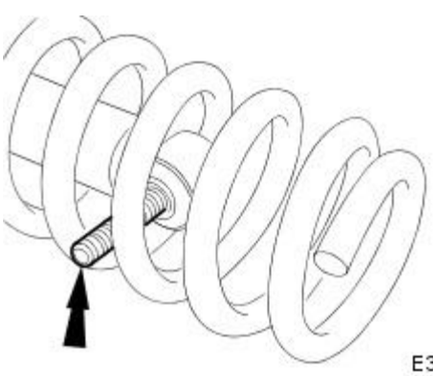

E35018

23. Remove the shock absorber from the upper mounting.

- Position a wrench on the shock absorber shaft flats to prevent rotation (wrench in socket on vehicles with adaptive damping).
- Remove the shock absorber upper retaining nut.
- Remove the upper washer and isolator.

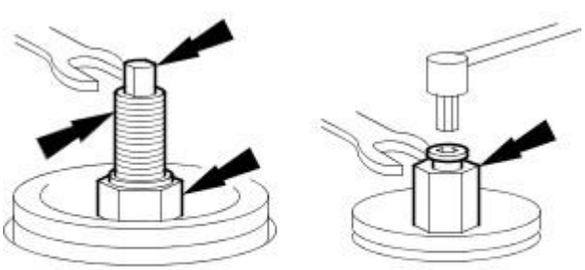

E35166

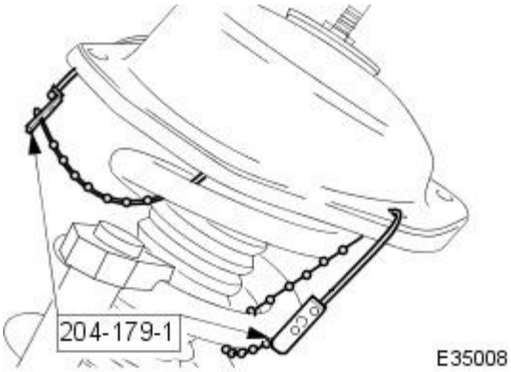

24. Remove the special tools 204-179-1 and remove the upper mounting from the spring.

25. Remove the shock upper mounting assembly from the spring.

- Remove the spring upper isolator.
- Remove the upper spring pan.
- Remove the packing ring.

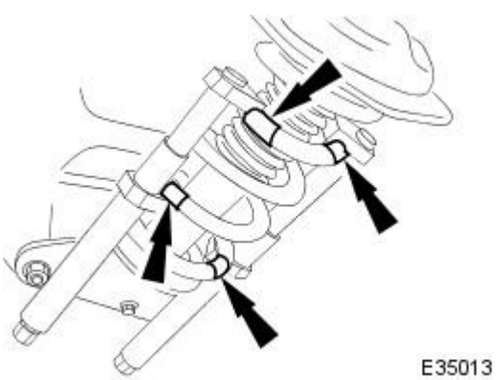

26. For installation purposes, mark position of tool arms on spring.

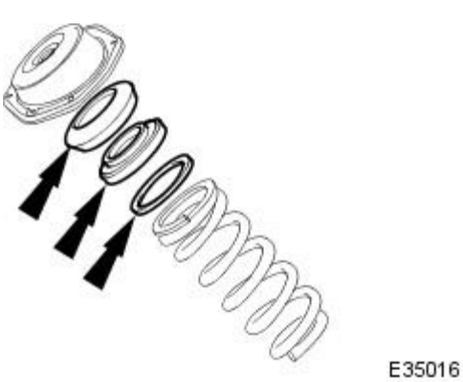

27. CAUTION: The type and number of packers fitted to rear springs is dependent upon spring rating. Some springs are fitted without any packers. The original packer(s) must therefore be retained on removal.

Remove the shock upper mounting assembly from the spring.

- Remove the spring upper isolator.
- Remove the upper spring pan.
- Remove the packing ring.

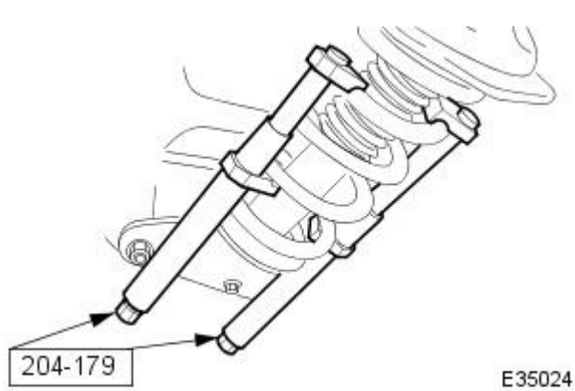

28. WARNING: WHEN RELEASING THE SPRING TENSION, SLACKEN THE SPECIAL-TOOL ADJUSTMENT BOLTS EVENLY.

Evenly slacken the adjuster bolts on special tools 204-179 and remove the tools from the spring.

Installation

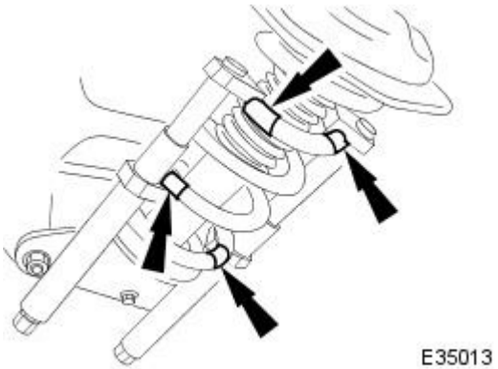

1. Transfer reference marks from old spring to replacement spring.

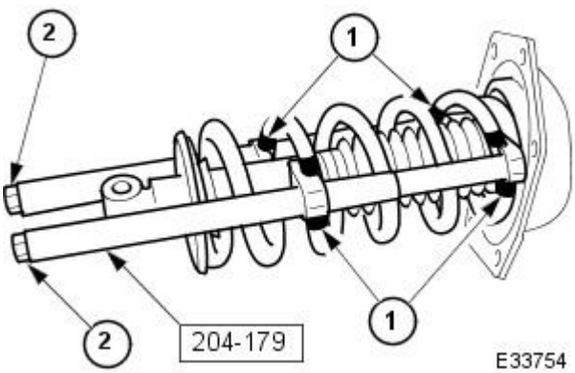

2. WARNINGS:

ENSURE THE SPECIAL TOOLS ARE POSITIONED DIAMETRICALLY OPPOSITE ON THE SPRING AND THE ARMS ARE CORRECTLY SEATED .

TIGHTEN THE SPECIAL TOOL ADJUSTMENT BOLTS EVENLY WHEN COMPRESSING THE SPRING.

Using the special tools 204-179 compress the spring.

1. Fit and align the arms of the special-tools to the spring reference marks.
2. Tighten the special-tool adjustment bolts evenly to compress the spring.

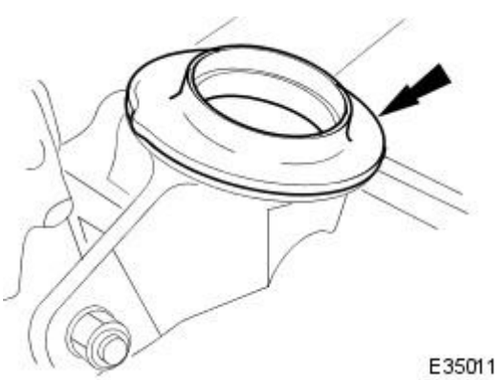

3. Install the spring pigtail lower seat on to the wishbone.

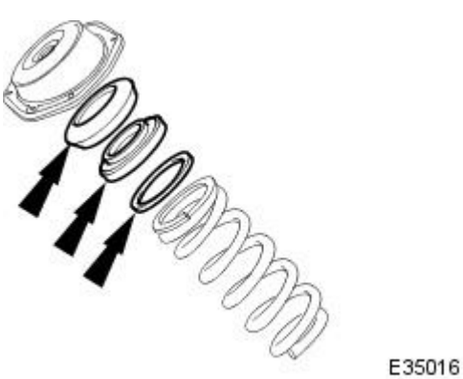

4. Install the spring in the upper mounting.

- Install the spring upper isolator.
- Install the upper spring pan.
- Install the packing ring.

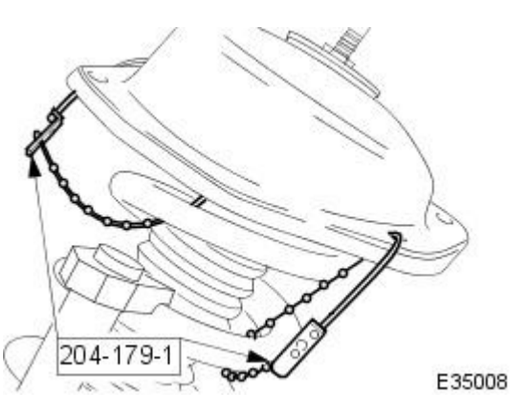

5. Ensuring the correct orientation, secure the upper mounting to the spring using the special tools 204-179-1.

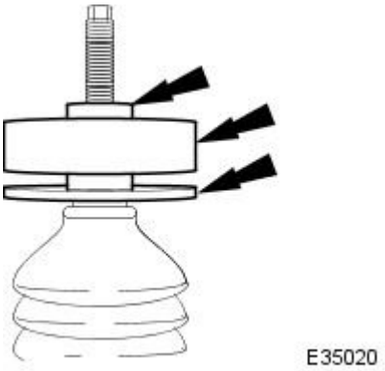

6. Position the spring upper mounting assembly on to the shock absorber.

- Apply a thin coat of grease to the upper mounting bush.
- Ensure that the washer, lower isolator and bush are correctly positioned on the shock absorber shaft.
- Position the shock absorber shaft in the upper mounting.

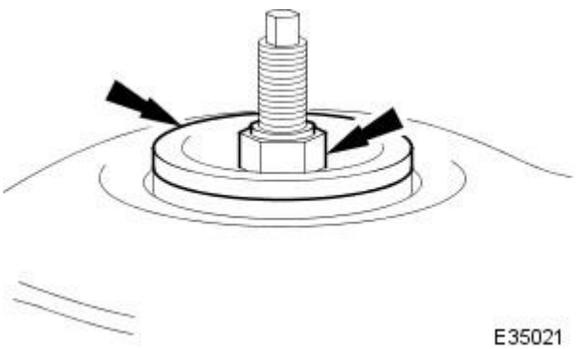

7. Secure the top of the shock absorber to the upper mounting.

- Install the spring upper isolator.
- Install the upper washer.
- Install but do not tighten the locknut on to the shock absorber.

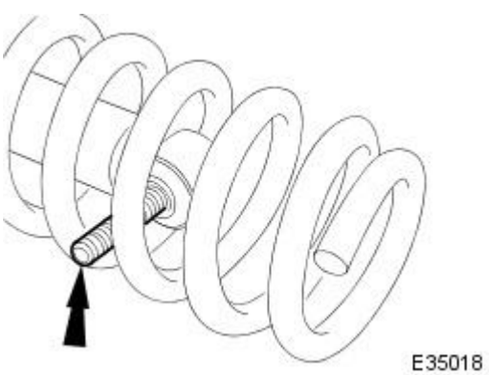

8. Manually retract the shock absorber and place a bolt through the spring coils and the shock absorber lower-bush.

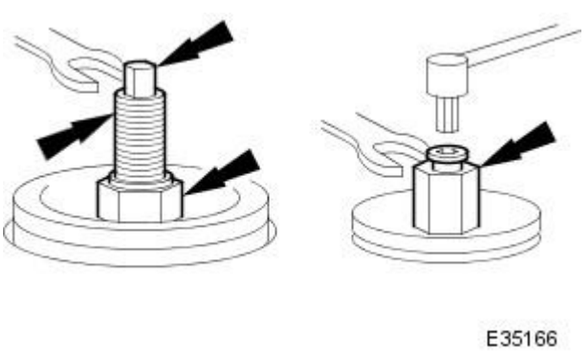

9. Secure the shock absorber to the upper mounting.

- Position a wrench on the shock absorber shaft flats to prevent rotation (wrench in socket on vehicles with adaptive damping).
- Tighten the shock absorber upper lock nut to 30-40 Nm (16-18 Nm on vehicles with adaptive damping).

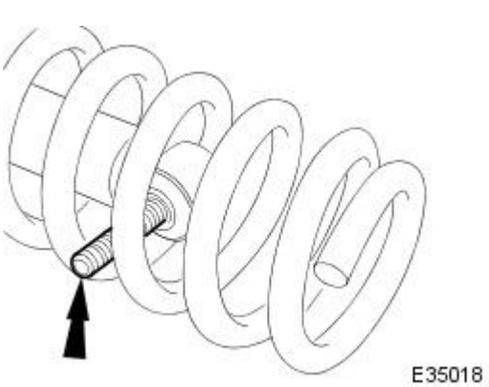

10. Position the shock absorber and spring assembly to the vehicle.

11. With assistance, manually retract the shock absorber and remove the temporary securing bolt.

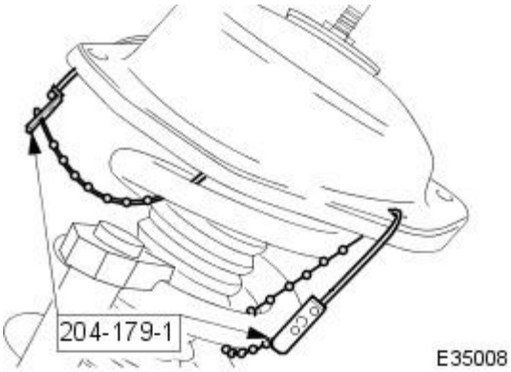

12. Remove the special tools 204-179-1.

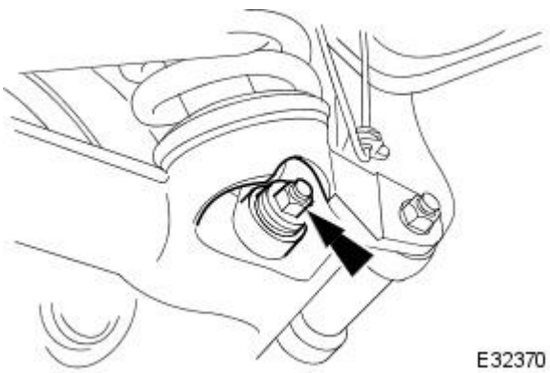

13. Align the shock absorber lower bush to the wishbone and install the mounting bolt.

1. Install but do not tighten the nut.

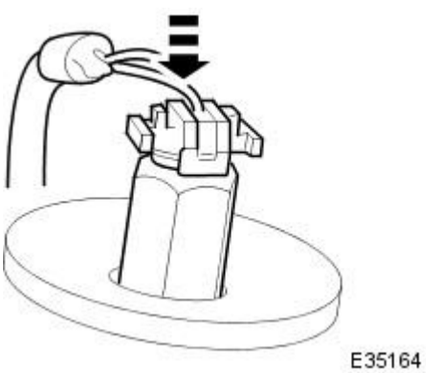

14. CAUTION: Make sure the adaptive damping electrical connector is correctly aligned. Failure to follow these instructions may cause damage to the electrical connector.

On vehicles with adaptive damping:

- Connect the shock absorber electrical connector, ensuring the electrical connector key locates in the socket keyway.

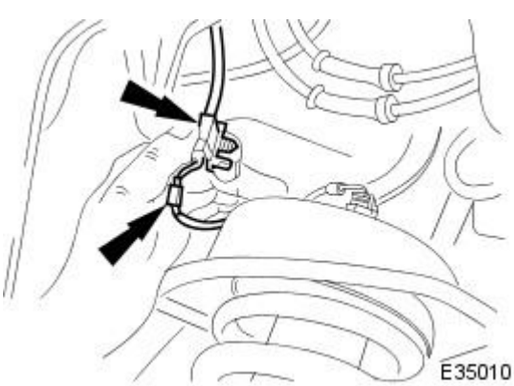

15. Seat the upper mounting in the body location.

1. If adaptive damping is installed, ensure the harness is correctly positioned.

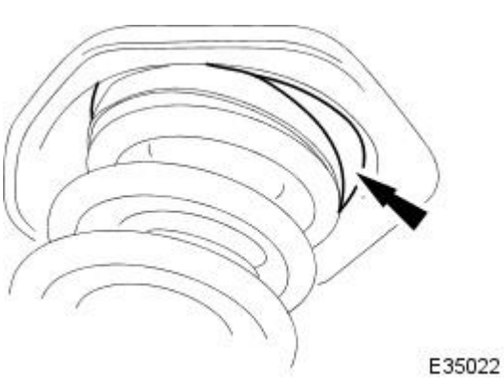

16. Ensuring that the spring is seated on the isolator and spring pan, position the upper spring pan on to the body studs.

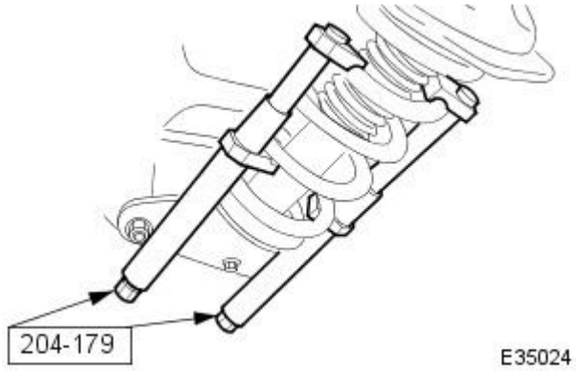

17. Release the spring tension.

- Ensuring that the spring is correctly located, evenly slacken the adjuster bolts on the special tools 204-179.

18. Remove the special tools 204-179.

19. Fully seat and secure the upper spring pan to the body.

- Ensure the spring pan is correctly seated in the body location.
- Install the nuts securing the spring pan to the body studs.
- Tighten to 17-23 Nm.

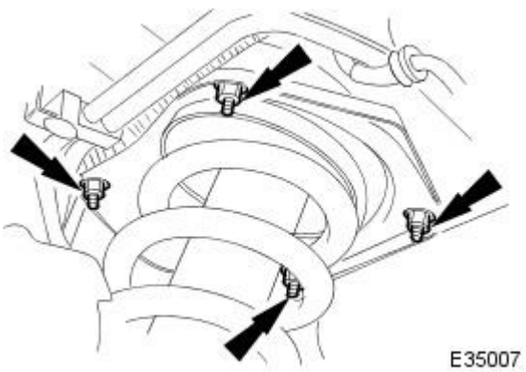

20. Tighten to 80-100 Nm.

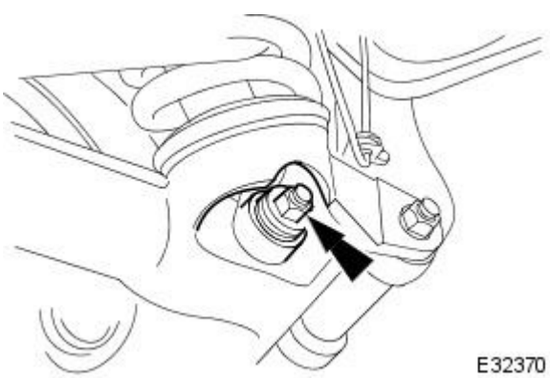

21. Install the shims on the pivot pin sleeve in the positions noted during removal.

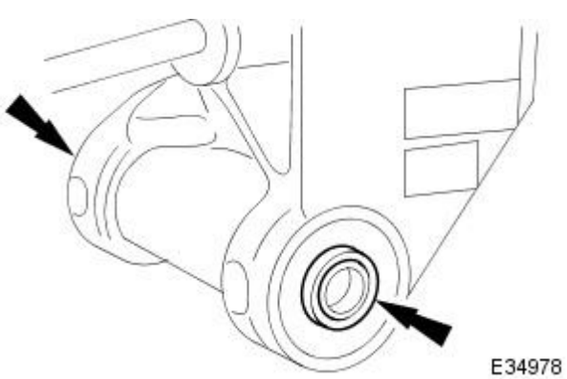

22. Install the hub assembly to the wishbone assembly.

- Position the hub and carrier to the wishbone.
- Install the pivot pin ensuring that the eccentric flange correctly seats in the wishbone groove.

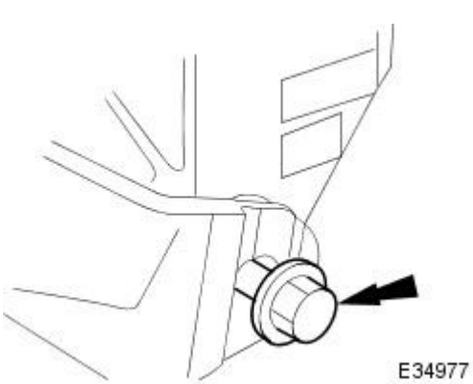

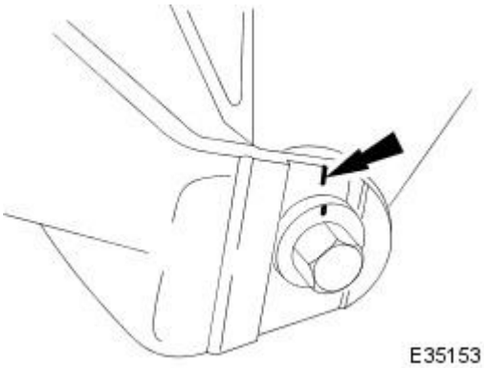

23. Install the pivot pin nut.

- Align the marker on the pivot pin flange with the mark made on wishbone.
- Install the nut on to the pivot pin and, ensuring the pin position is not disturbed, tighten the nut to 88-118 Nm.

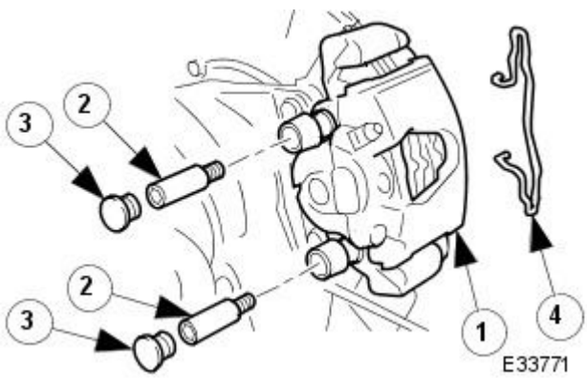

24. Release the tie strap securing the brake caliper to the suspension mounting bracket.

25. Install the brake caliper on to the carrier.

1. Position the caliper assembly on to the carrier.
2. Install the guide pins and tighten to 25-30 Nm.
3. Install the dust caps.
4. Install the brake caliper spring clip.

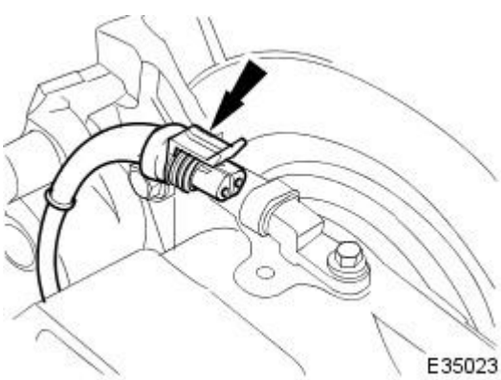

26. Connect the wheel speed sensor electrical connector.

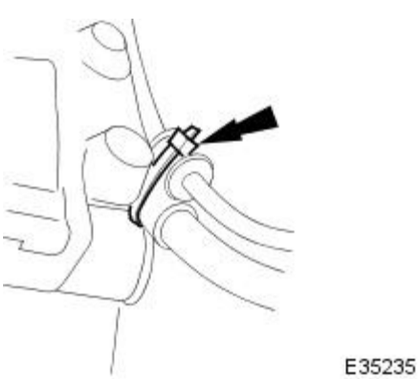

27. Using a new tie strap, secure the wheel speed sensor harness to the brake hose clip.

28. Install the rear wheel.
For additional information, refer to Section 204-04 Wheels and Tires.

29. Remove the axle stands and lower the vehicle.
For additional information, refer to Section 100-02 Jacking and Lifting.

30. Check and adjust the rear wheel alignment as necessary.
For additional information, refer to Section 204-00 Suspension System - General Information.

Rear Suspension - Rear Stabilizer Bar

Removal and Installation

Materials

Name	Specification
Rubber Suspension Insulator Lube	Castrol NTR

Removal

1. CAUTION: Replacement of nuts and bolts: Various thread-locking devices are used on nuts and bolts throughout the vehicle. These devices restrict the number of times a nut or bolt can be used. See section 100-00 for information.

Raise vehicle on a four-post lift. Refer to section 100-02.

2. Remove nuts and bolts securing stabilizer bar to links.

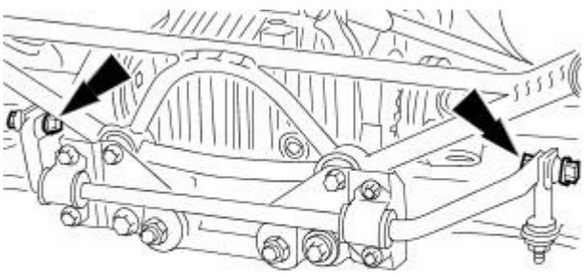

E32322

3. Remove stabilizer bar mounting-brackets.

- Remove bolts.
- Remove brackets.

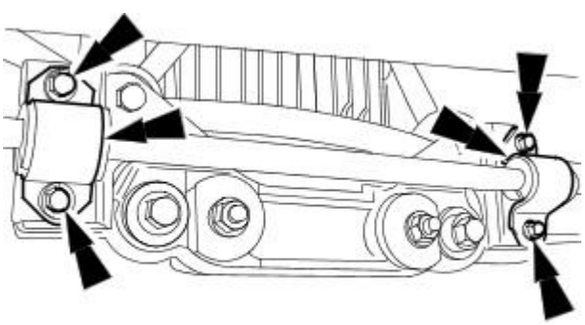

E32323

4. Remove stabilizer bar from vehicle.

- Remove bushes.

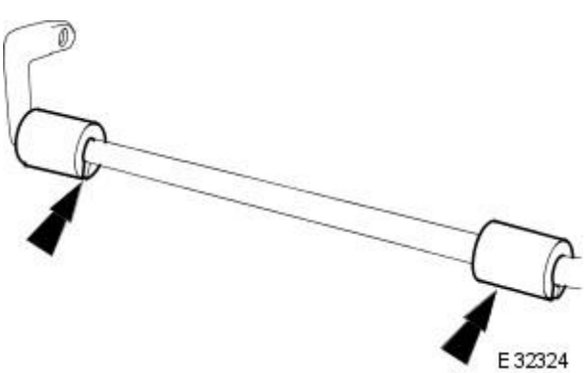

E32324

5. Clean relevant parts.

Installation

1. CAUTION: Make sure the Castrol NTRgrease is only applied to the inner surface of the mounting bushes. Failure to follow this instruction may affect the retention of the bushes in the retaining brackets.

Fit bushes to stabilizer bar.

- Apply a thin film of Castrol NTR grease to the inner surface of the bushes.

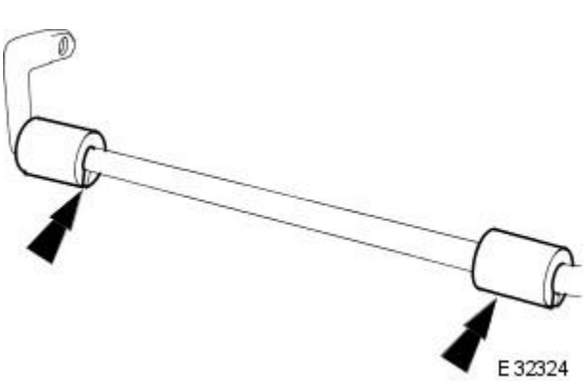

E32324

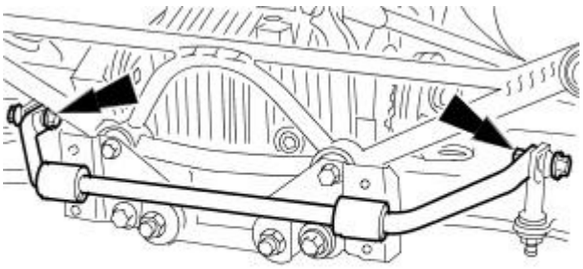

E32325

2. Position stabilizer bar to vehicle.

- Position stabilizer bar to links.
- Fit nuts and bolts, DO NOT tighten at this stage.

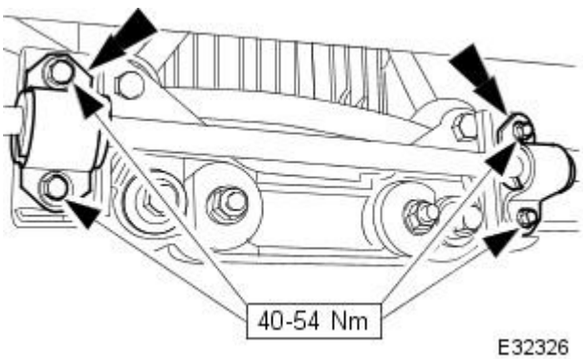

E32326

3. Fit mounting brackets to stabilizer bar.

- Align bushes and fit mounting brackets.
- Fit and tighten bolts.

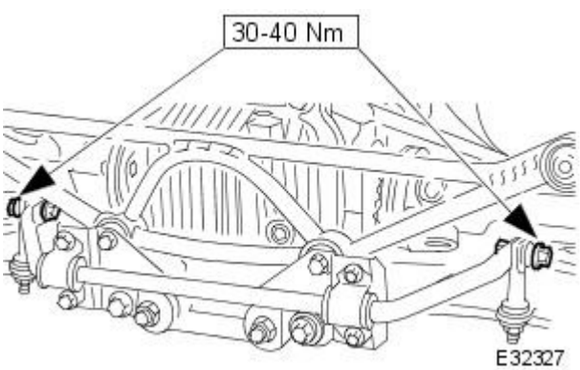

E32327

4. Tighten nuts securing stabilizer bar to links.

5. Lower four-post lift.

Rear Suspension - Rear Stabilizer Bar Bushing

Removal and Installation

Materials

Name	Specification
Rubber Suspension Insulator Lube	Castrol NTR

Removal

1. CAUTION: Replacement of nuts and bolts: Various thread-locking devices are used on nuts and bolts throughout the vehicle. These devices restrict the number of times a nut or bolt can be used. See section 100-00 for information.

Raise vehicle on a four-post lift. Refer to section 100-02.

2. Remove nuts and bolts securing stabilizer bar to links.

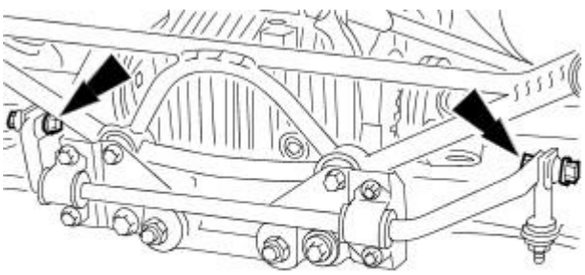

E32322

3. Remove stabilizer bar mounting-brackets.

- Remove bolts.
- Remove brackets.

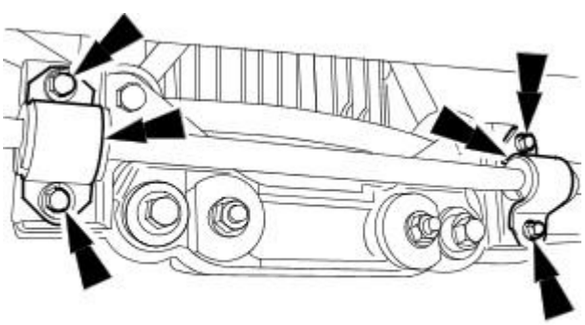

E32323

4. Remove stabilizer bar from vehicle.

- Remove bushes.

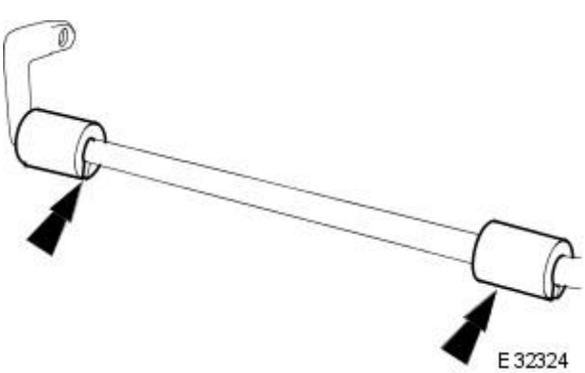

E32324

5. Clean relevant parts.

Installation

1. CAUTION: Make sure the Castrol NTR grease is only applied to the inner surface of the mounting bushes. Failure to follow this instruction may affect the retention of the bushes in the retaining brackets.

Fit bushes to stabilizer bar.

- Apply a thin film of Castro NTR grease to the inner surface of the bushes.

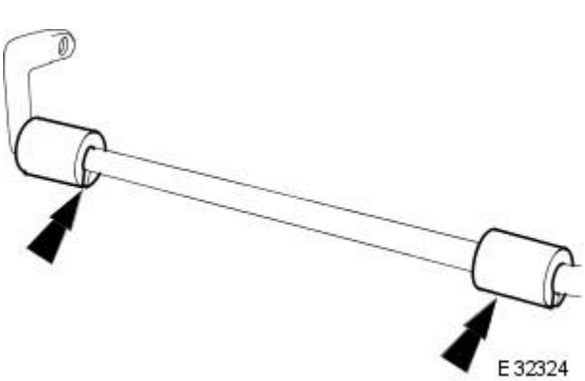

E32324

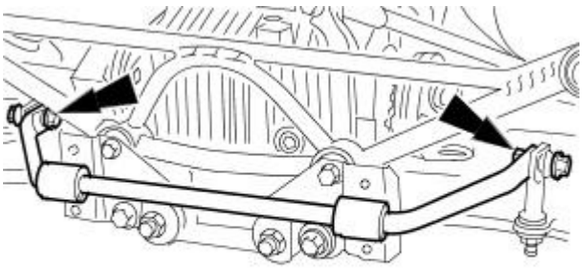

E32325

2. Position stabilizer bar to vehicle.

- Position stabilizer bar to links.
- Fit nuts and bolts, DO NOT tighten at this stage.

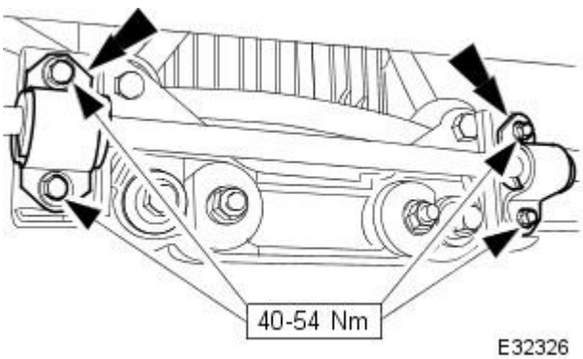

E32326

3. Fit mounting brackets to stabilizer bar.

- Align bushes and fit mounting brackets.
- Fit and tighten bolts.

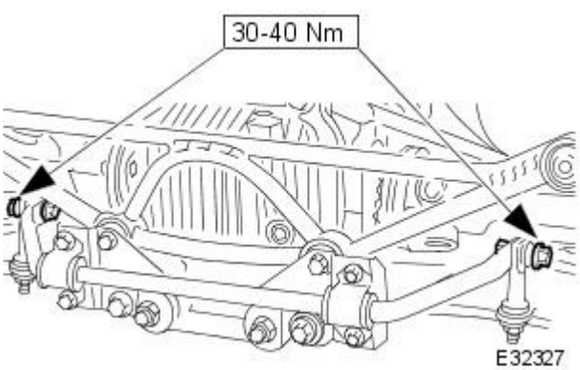

E32327

4. Tighten nuts securing stabilizer bar to links.

5. Lower four-post lift.

Rear Suspension - Rear Stabilizer Bar Link

Removal and Installation

Removal

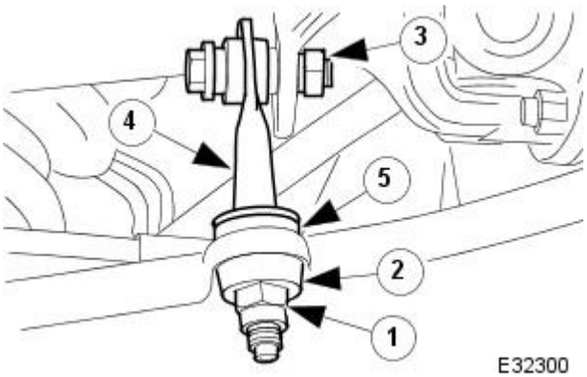

1. CAUTION: Replacement of nuts and bolts: Various thread-locking devices are used on nuts and bolts throughout the vehicle. These devices restrict the number of times a nut or bolt can be used. See section 100-00 for information.

Raise vehicle on a four-post lift. Refer to section 100-02.

2. Remove link.

1. Remove nut securing link to wishbone.
2. Remove lower bush.
3. Remove nut and bolt securing link to stabilizer bar.
4. Remove link from wishbone.
5. Remove upper-bush from link.

3. Clean relevant parts.

Installation

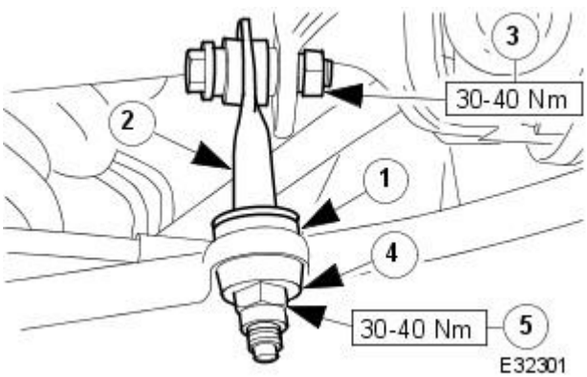

1. Fit link.

1. Fit upper bush to link.
2. Fit link to wishbone.
3. Fit and tighten nut and bolt securing link to stabilizer bar.
4. Fit lower bush to link.
5. Fit and tighten nut securing link to wishbone.

2. Lower four-post lift.

Rear Suspension - Stabilizer Bar Link Bushing

Removal and Installation

Removal

1. CAUTION: Replacement of nuts and bolts: Various thread-locking devices are used on nuts and bolts throughout the vehicle. These devices restrict the number of times a nut or bolt can be used. See section 100-00 for information.

Raise vehicle on a four-post lift. Refer to section 100-02.

2. Remove link.

1. Remove nut securing link to wishbone.
2. Remove lower bush.
3. Remove nut and bolt securing link to stabilizer bar.
4. Remove link from wishbone.
5. Remove upper-bush from link.

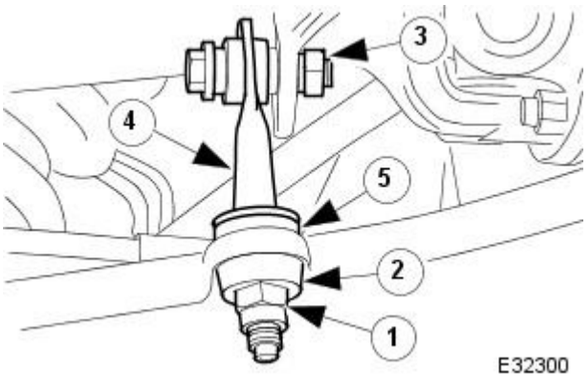

3. Clean relevant parts.

Installation

1. Fit link.

1. Fit upper bush to link.
2. Fit link to wishbone.
3. Fit and tighten nut and bolt securing link to stabilizer bar.
4. Fit lower bush to link.
5. Fit and tighten nut securing link to wishbone.

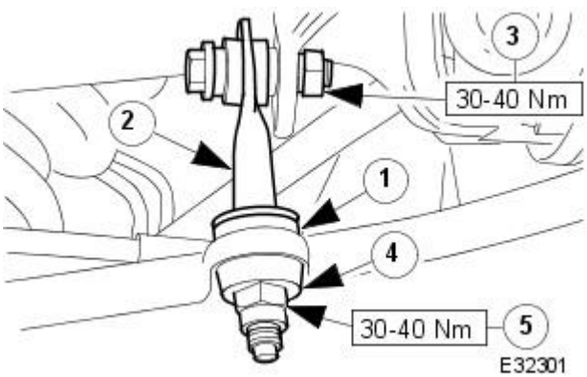

2. Lower four-post lift.

Rear Suspension - Stabilizer Bar Mounting Frame2-Door

Removal and Installation

Removal

1. CAUTION: Replacement of nuts and bolts: Various thread-locking devices are used on nuts and bolts throughout the vehicle. These devices restrict the number of times a nut or bolt can be used. See section 100-00 for information.

Raise vehicle on a two-post lift. Refer to section 100-02.

2. Remove RH rear wheel. Refer to section 204-04.

3. Disconnect driveshaft from the differential drive-coupling.

1. Reference-mark position of driveshaft coupling to differential coupling.
2. Remove nuts and bolts.

- Position driveshaft aside.

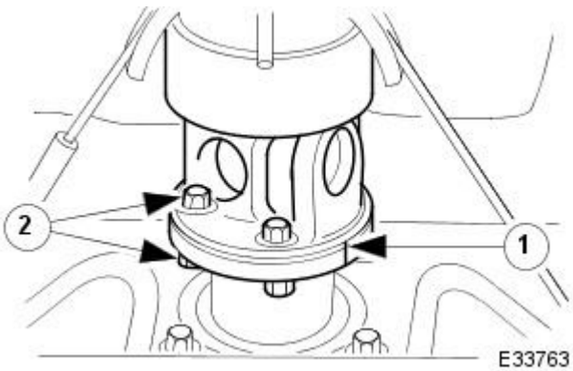

4. Release both exhaust tail pipes from rear mountings.

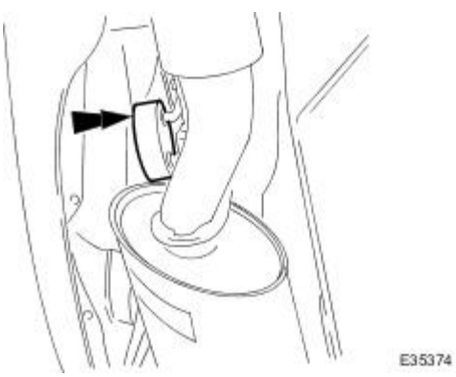

5. CAUTION: To prevent damage to the axle assembly, position a piece of wood between the jack and axle assembly.

Position a suitable jack under the suspension subframe, and support the weight of the axle assembly.

6. Remove nuts and bolts securing monostrut to wishbone-tie assembly.

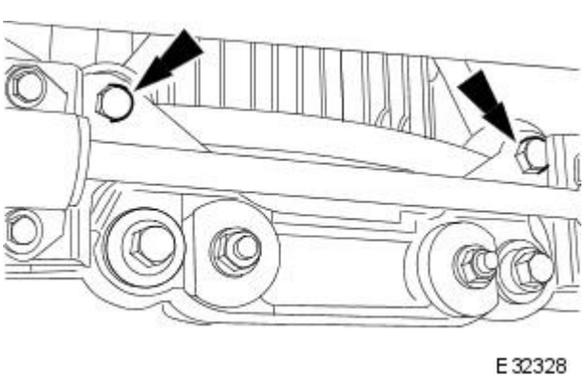

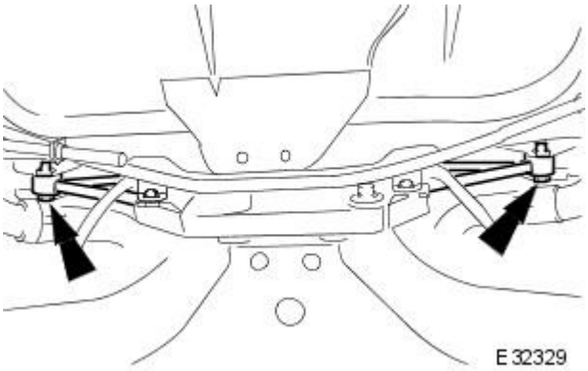

7. Remove bolts securing monostrut to body brackets.

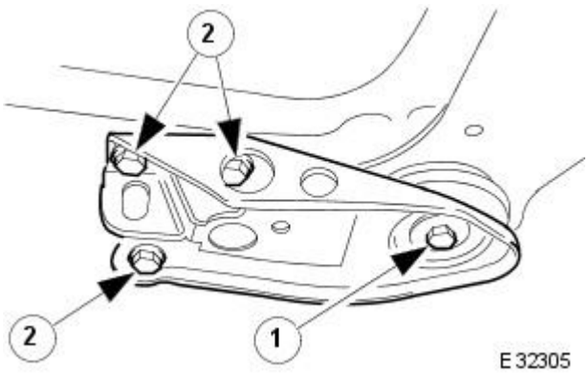

8. Remove both mounting brackets from suspension subframe.

1. Remove bush center bolt from bracket.
2. Remove bolts securing bracket to body.

- Remove bracket.
- Repeat procedure to remove opposite-side bracket.

9. Lower axle assembly sufficiently (approximately 25mm), to allow for the removal of the monostrut.

10. Remove monostrut through RH wheel arch.

11. Clean relevant components and mating surfaces.

Installation

1. Manoeuvre monostrut into position and align in body brackets.

2. Fit bolts securing monostrut to body brackets, DO NOT tighten bolts at this stage.

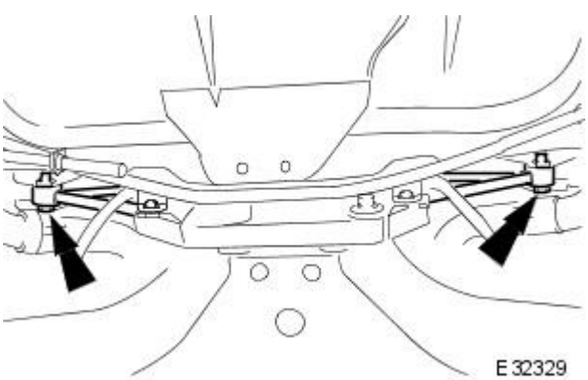

3. Raise axle assembly on jack, and guide monostrut into wishbone-tie assembly brackets.

4. Fit nuts and bolts securing monostrut to wishbone-tie assembly.

- Tighten nuts.

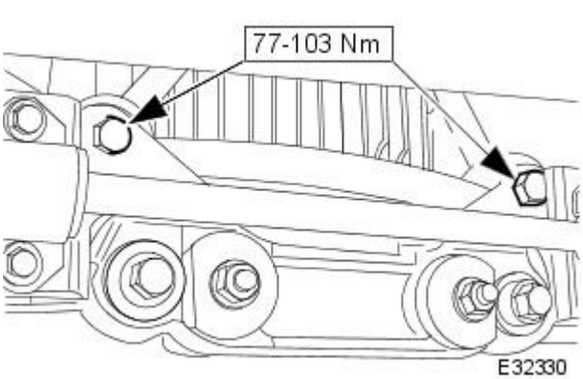

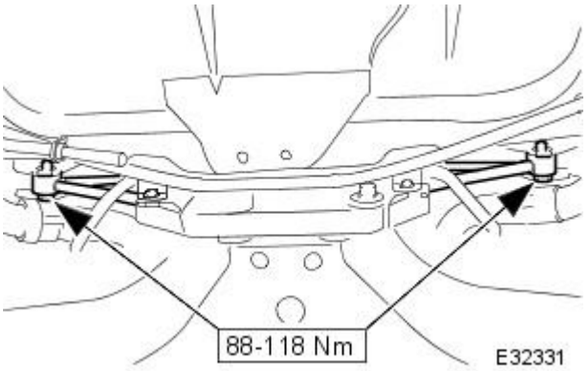

5. Tighten bolts , securing monostrut to body brackets.

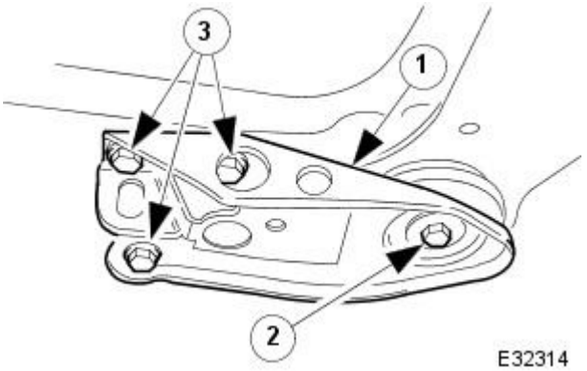

6. Fit suspension subframe mounting-brackets.

1. Position bracket to subframe.
2. Fit bush center bolt, DO NOT tighten bolt at this stage.
3. Fit bolts securing bracket to body, DO NOT tighten bolts at this stage.

- Repeat procedure on opposite-side mounting bracket.

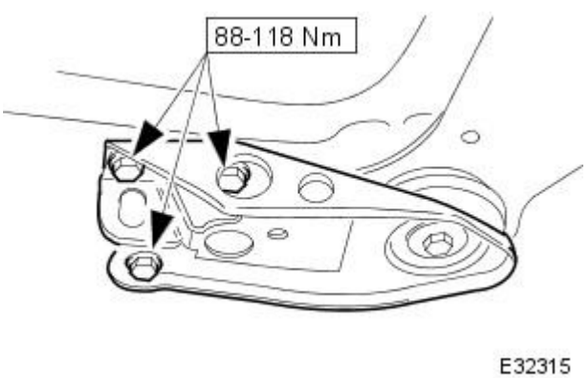

7. Tighten bolts securing mounting brackets to body.

- Repeat procedure on opposite-side mounting bracket.

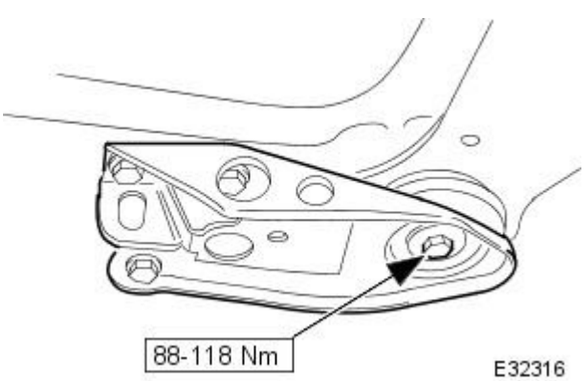

8. Tighten mounting bracket, bush center bolts.

- Repeat procedure on opposite-side mounting bracket.

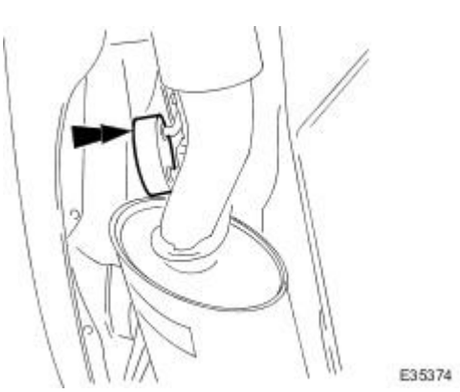

9. Remove jack from beneath axle assembly.

10. Fit exhaust tail pipes to mountings.

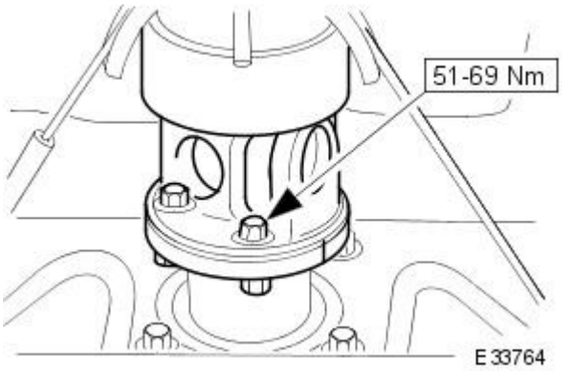

11. Connect driveshaft to differential coupling.

- Align reference marks on couplings.
- Fit nuts and bolts.
- Tighten bolts.

12. Fit road wheel. Refer to section 204-04.

13. Lower vehicle.

Rear Suspension - Stabilizer Bar Mounting FrameConvertible

Removal and Installation

Removal

1. CAUTION: Replacement of nuts and bolts: Various thread-locking devices are used on nuts and bolts throughout the vehicle. These devices restrict the number of times a nut or bolt can be used. See section 100-00 for information.

Raise vehicle on a two-post lift. Refer to section 100-02.

2. Remove RH rear wheel. Refer to section 204-04.

3. Remove both rear struts.

- Remove ratchet straps securing drain tubes.
- Remove bolts.
- Remove struts.

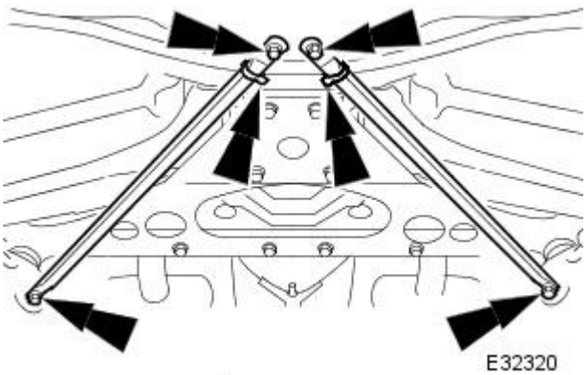

4. Disconnect driveshaft from the differential drive-coupling.

1. Reference-mark position of driveshaft coupling to differential coupling.
2. Remove nuts and bolts.

- Position driveshaft aside.

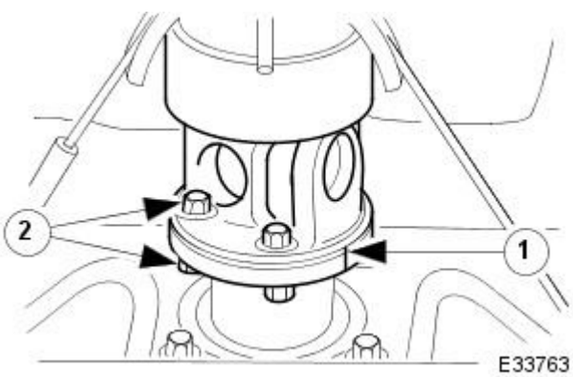

5. Release both exhaust tail pipes from rear mountings.

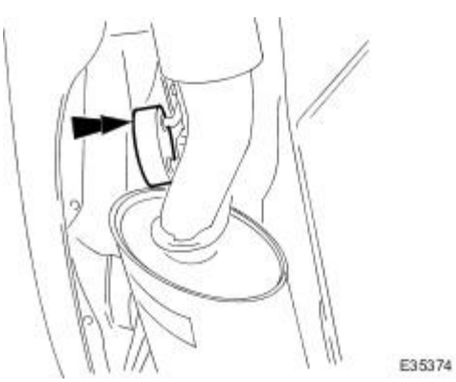

6. CAUTION: To prevent damage to the axle assembly, position a piece of wood between the jack and the axle assembly.

Position a suitable jack under the suspension subframe, and support the weight of the axle assembly.

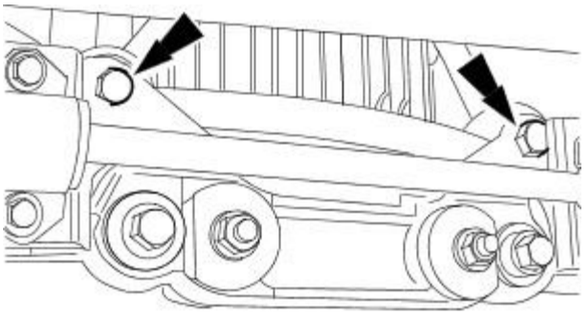

7. Remove nuts and bolts securing monostrut to wishbone-tie assembly.

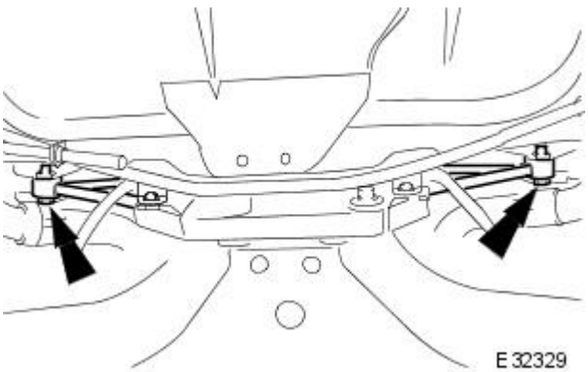

8. Remove bolts securing monostrut to body brackets.

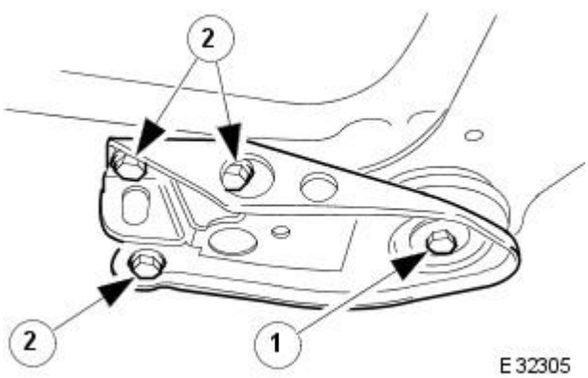

9. Remove both mounting brackets from suspension subframe.

1. Remove bush center bolt from bracket.
2. Remove bolts securing bracket to body.

- Remove bracket.
- Repeat procedure to remove opposite-side bracket.

10. Lower axle assembly sufficiently (approximately 25mm), to allow for the removal of the monostrut.

11. Remove monostrut through RH wheel arch.

12. Clean relevant components and mating surfaces.

Installation

1. Manoeuvre monostrut into position and align in body brackets.

2. Fit bolts securing monostrut to body brackets, DO NOT tighten bolts at this stage.

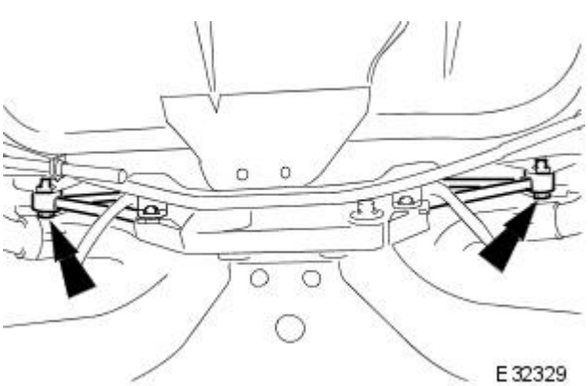

3. Raise axle assembly on jack, and guide monostrut into wishbone-tie assembly brackets.

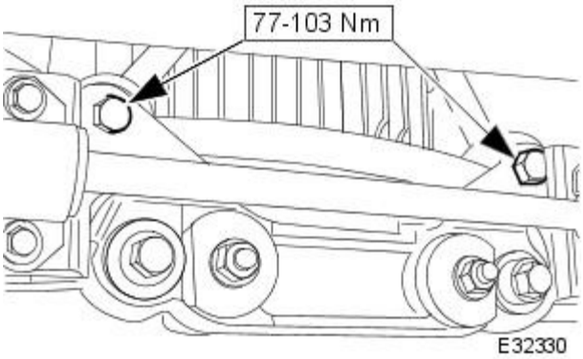

4. Fit nuts and bolts securing monostrut to wishbone-tie assembly.

- Tighten nuts.

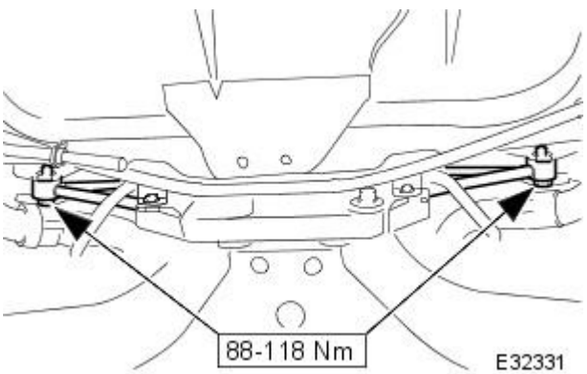

5. Tighten bolts , securing monostrut to body brackets.

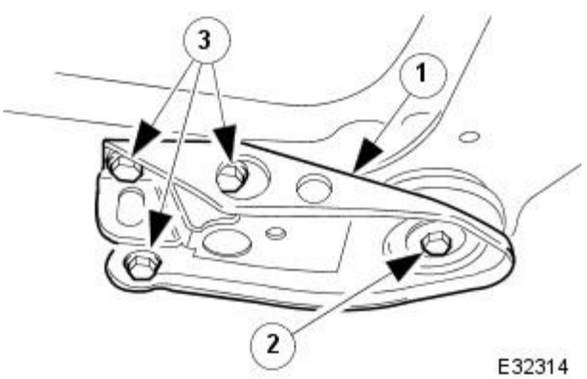

6. Fit suspension subframe mounting-brackets.

1. Position bracket to subframe.
2. Fit bush center bolt, DO NOT tighten bolt at this stage.
3. Fit bolts securing bracket to body, DO NOT tighten bolts at this stage.

- Repeat procedure on opposite-side mounting bracket.

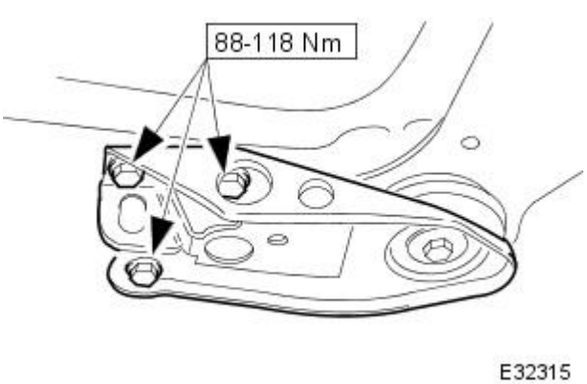

7. Tighten bolts securing mounting brackets to body.

- Repeat procedure on opposite-side mounting bracket.

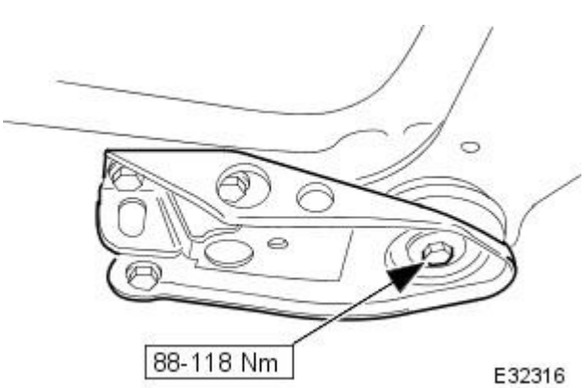

8. Tighten mounting bracket, bush center bolts.

- Repeat procedure on opposite-side mounting bracket.

9. Remove jack from beneath axle assembly.

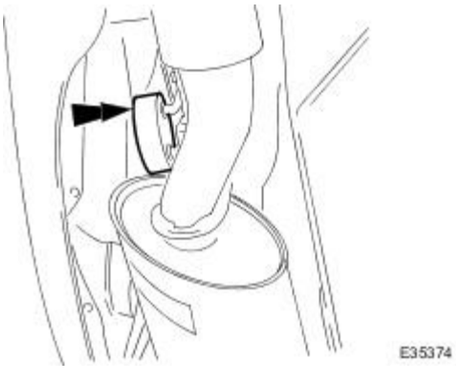

10. Fit exhaust tail pipes to mountings.

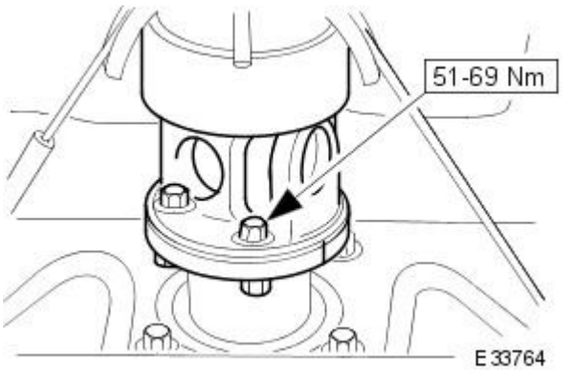

11. Connect driveshaft to differential coupling.

- Align reference marks on couplings.
- Fit nuts and bolts.
- Tighten bolts.

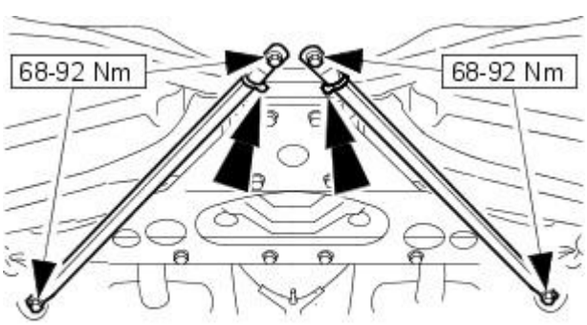

12. Fit body struts.

- Align body struts.
- Fit and tighten bolts.
- Secure drain tubes to struts with tie straps.

13. Fit road wheel. Refer to section 204-04.

14. Lower vehicle.

Rear Suspension - Stabilizer Bar Mounting Frame Bushing2-Door

Removal and Installation

Special Tool(s)	
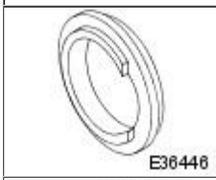	Adaptor Ring 204-116-01 (JD 143-1)
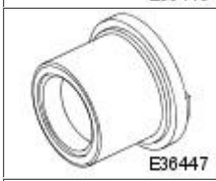	Anvil Adaptor 204-116-02 (JD 143-2)
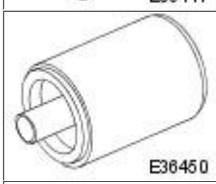	Remover/Replacer Adaptor 204-116-08 (JD 143-8)
	Differential Strut - Bush Replacer 204-201 (JD 241)

Removal

1. CAUTION: Replacement of nuts and bolts: Various thread-locking devices are used on nuts and bolts throughout the vehicle. These devices restrict the number of times a nut or bolt can be used. See section 100-00 for information.

Remove monostrut from vehicle. Refer to operation 64.25.12.

2. Using a hydraulic press remove bush from monostrut.

- Using special tools, support monostrut on the press bed.
- Position special tool on top of bush and align tool with press ram.
- Press bush from monostrut.

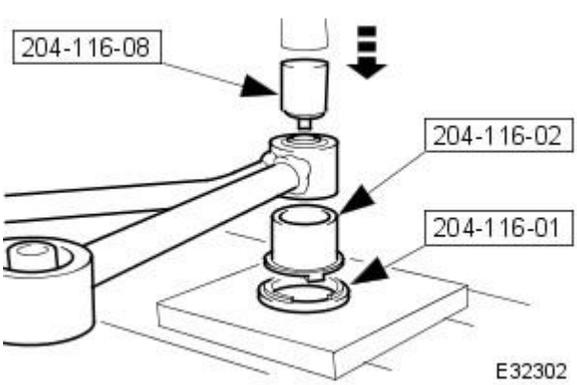

3. Clean relevant parts.

Installation

1. Using a hydraulic press, fit bush into monostrut.

- Support the bush-bore of the monostrut between plates on the press-bed.
- Position bush to bore.
- Position special tool on top of bush and align tool with press ram.
- Press bush into monostrut.

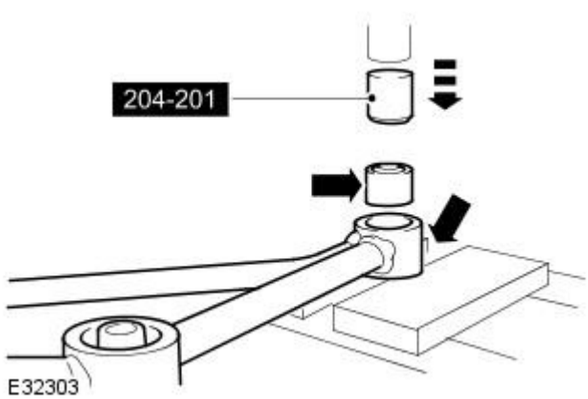

2. Fit monostrut to vehicle. Refer to operation 64.25.12 .

Rear Suspension - Stabilizer Bar Mounting Frame BushingConvertible

Removal and Installation

Special Tool(s)	
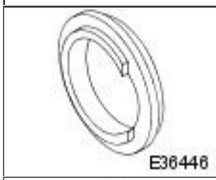	Adaptor Ring 204-116-01 (JD 143-1)
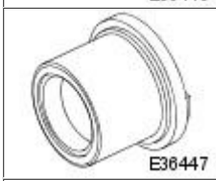	Anvil Adaptor 204-116-02 (JD 143-2)
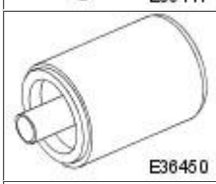	Remover/Replacer Adaptor 204-116-08 (JD 143-8)
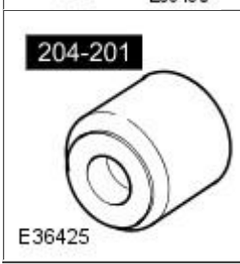	Differential Strut - Bush Replacer 204-201 (JD 241)

Removal

1. CAUTION: Replacement of nuts and bolts: Various thread-locking devices are used on nuts and bolts throughout the vehicle. These devices restrict the number of times a nut or bolt can be used. See section 100-00 for information.

Remove monostrut from vehicle. Refer to operation 64.25.12.70.

2. Using a hydraulic press remove bush from monostrut.

- Using special tools, support monostrut on the press bed.
- Position special tool on top of bush and align tool with press ram.
- Press bush from monostrut.

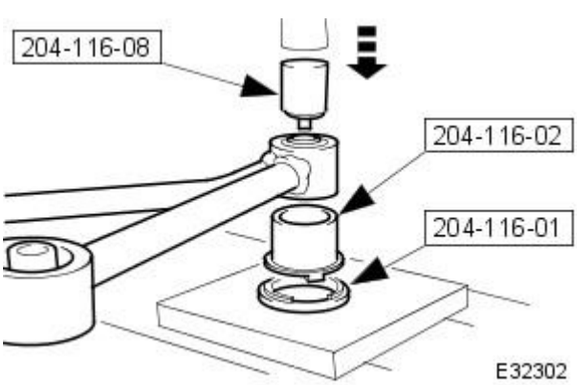

3. Clean relevant parts.

Installation

1. Using a hydraulic press, fit bush into monostrut.

- Support the bush-bore of the monostrut between plates on the press-bed.
- Position bush to bore.
- Position special tool on top of bush and align tool with press ram.
- Press bush into monostrut.

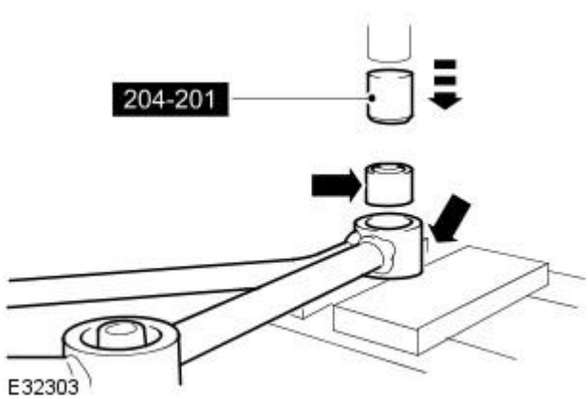

2. Fit monostrut to vehicle. Refer to operation 64.25.12.70.

Rear Suspension - Rear Wheel Bearing

Removal and Installation

Special Tool(s)	
E36458	Hub Holding Tool 204-195 (JD227)
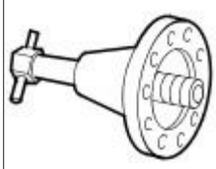 E36452	Hub Puller 204-011 (JD 1D)
E36453	Rear-Hub Remover 204-113 (JD 132)
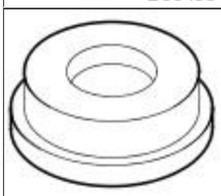 E36455	Bearing Cup Replacer Adaptor 204-118 (JD 550-4/1)
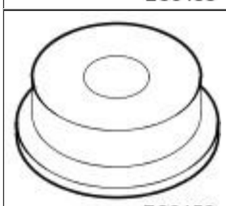 E36456	Bearing Cup Replacer Adaptor 204-118 (JD 550-4/2)
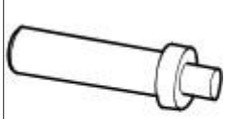 E36457	Driver Handle 100-013 (18G-134)
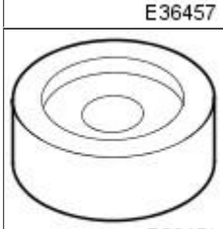 E36451	Rear-hub spacer replacer 204-003 (JD 15)
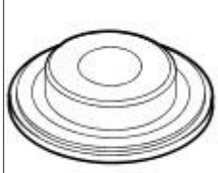 E36454	Oil Seal Remover/Replacer 205-234 (JD 550-1)

Removal

CAUTION: Replacement of nuts and bolts: Various thread-locking devices are used on nuts and bolts throughout the vehicle. These devices restrict the number of times a nut or bolt can be used. See section 100-00 for information.

1. Release handbrake.

2. Raise the vehicle on a four-post lift.
3. Fully slacken but do not remove parking brake cable adjuster nut.

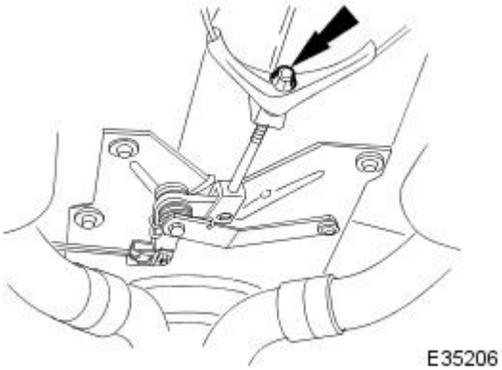

4. Release appropriate side parking brake cable from connecting clip.

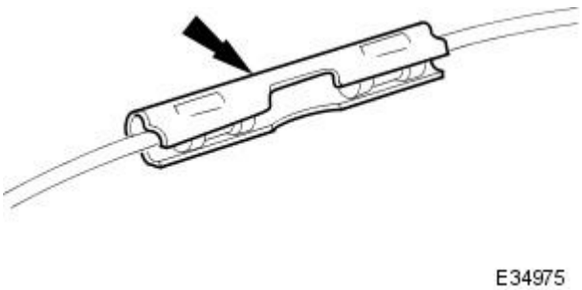

5. Withdraw parking brake cable through equalizer (LH side cable only).

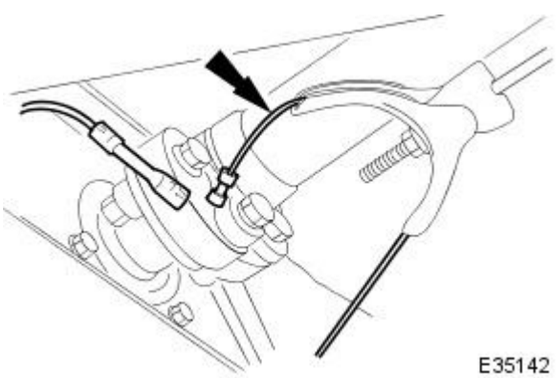

6. Lower four-post lift.
7. Raise rear of vehicle to working height and support on stands. Refer to section 100-02.
8. Remove rear wheel. Refer to section 204-04.
9. Position special tool 204-195 on hub studs and install securing nuts.

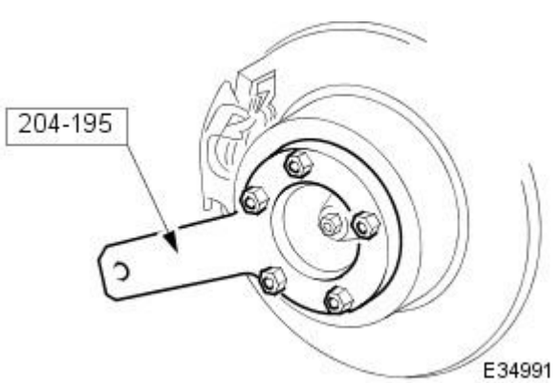

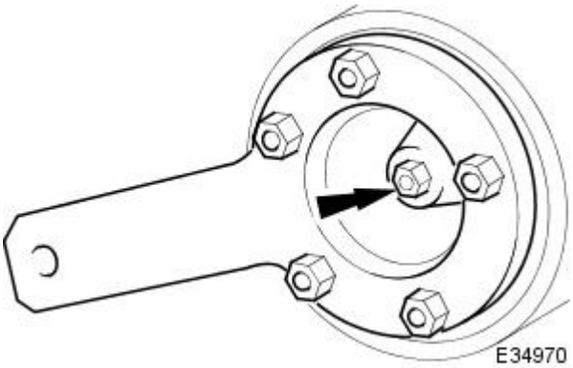

10. Slacken but do not remove hub to axle shaft securing nut.

11. Remove securing nuts and withdraw special tool (204-195) from hub.

12. Remove rear brake disc. Refer to 70.10.13.

13. Remove parking brake shoes. Refer to 70.40.05.

14. Remove wheel speed sensor.

- Disconnect wheel speed sensor harness from sensor
- Remove wheel speed sensor securing bolt and withdraw sensor from hub carrier.

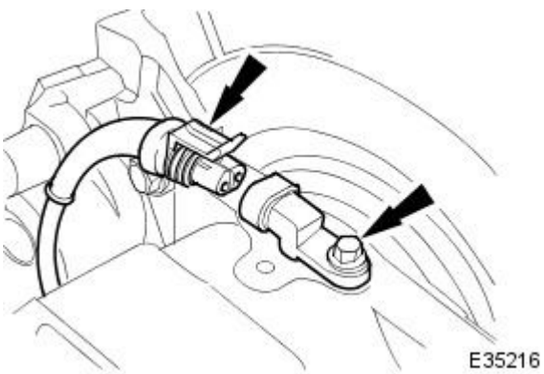

15. Sever and discard wheel speed sensor harness tie strap and position harness for access.

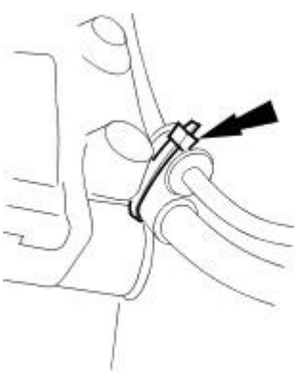

16. Remove hub nut and collar.

- Remove nut.
- Remove locating collar.

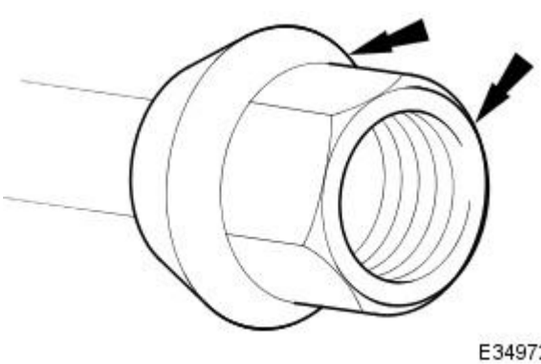

17. Install a thread protector on axle shaft.

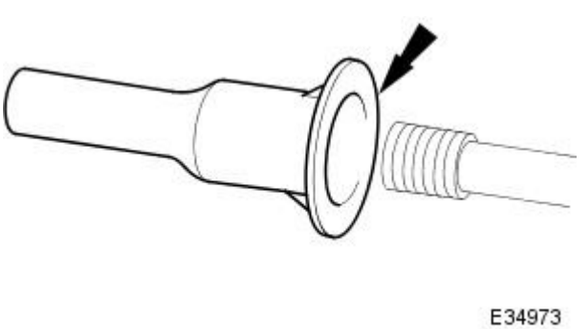

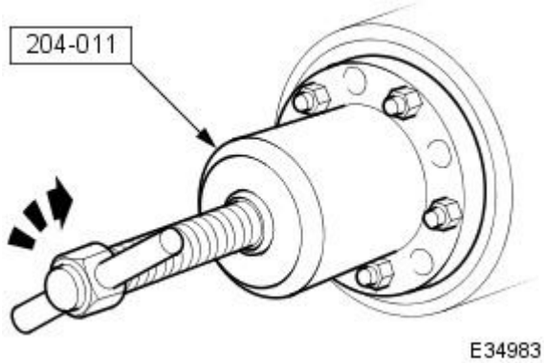

18. Release hub from axle shaft.

- Position hub puller 204-011 on hub studs.
- Install securing nuts.
- Progressively tighten puller center bolt to release hub from axle shaft splines.

19. Remove hub puller and thread protector.

- Remove securing nuts and release puller from hub.
- Remove thread protector from axle shaft.

20. Release parking brake cable from suspension mounting bracket.

- Remove cable retaining clip.
- Draw cable through suspension mounting bracket aperture.

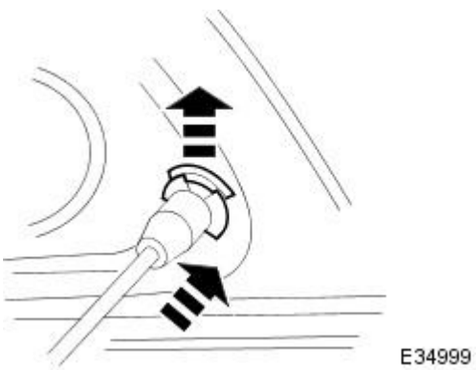

21. Remove parking brake cable to hub carrier grommet.

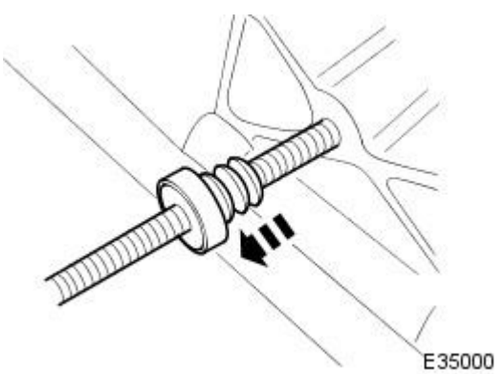

22. Remove back plate.

- Remove two bolts and two screws securing back plate to hub carrier.
- Withdraw back plate complete with parking brake cable.

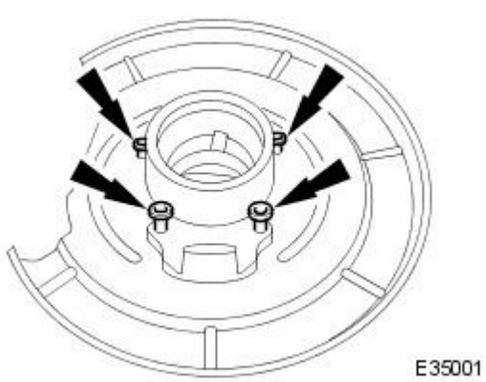

www.JagDocs.com

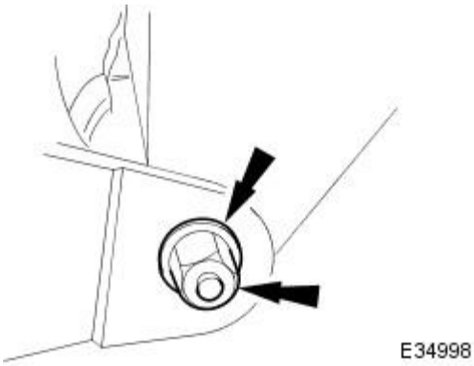

23. Remove nut and washer from pivot pin.

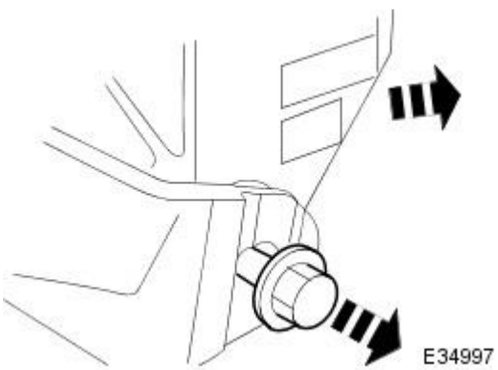

24. Remove hub and carrier from wishbone and axle shaft.

- Withdraw pivot pin and remove hub and carrier assembly.

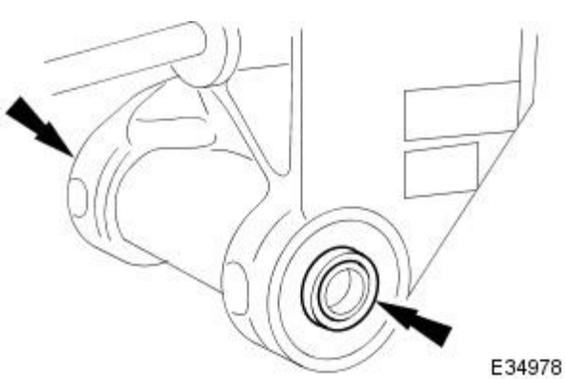

25. CAUTION: Note position of shims during removal. They must be returned to their original positions during installation.

Noting positions, remove shim from each end of pivot pin sleeve.

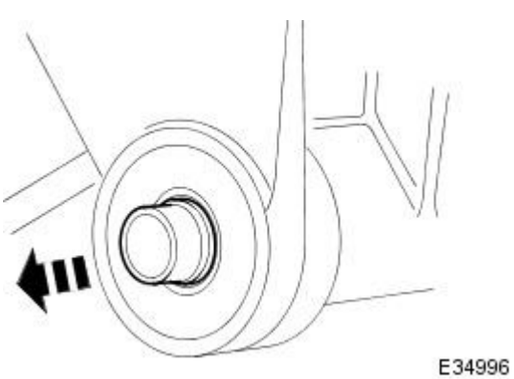

26. Withdraw pivot pin sleeve from hub carrier.

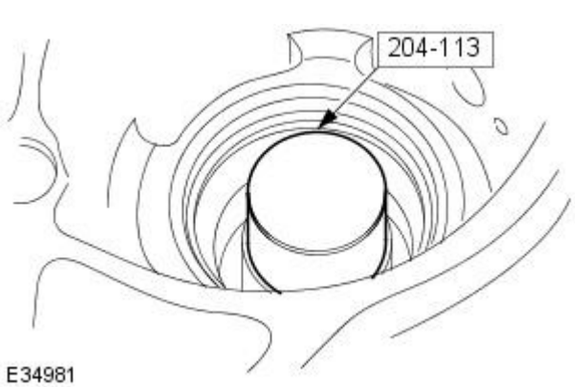

27. Using a hydraulic press, remove hub from carrier.

- Place large section of special tool 204-113 on press bed, with recess in tool uppermost.
- Position hub carrier on tool, ensuring handbrake cable housing locates in tool recess.
- Position small section of special tool on hub. 204-113.
- Align tool to press-ram, and operate press to remove hub from hub carrier.

28. Place hub carrier on a work bench.

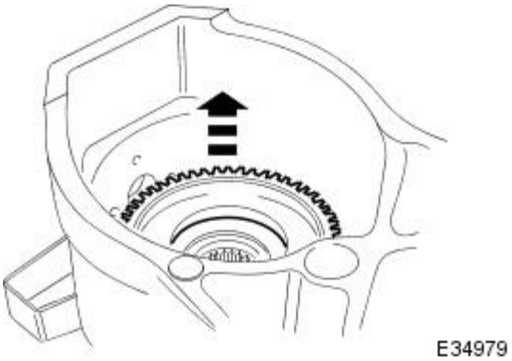

29. Withdraw ABS rotor from hub carrier.

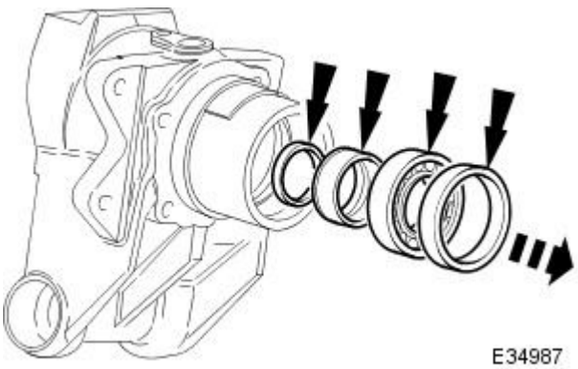

30. Remove outer seal and bearing assembly from hub carrier.

- Using a drift, remove and discard outer seal.
- Remove and discard outer bearing.
- Remove bearing spacer.
- Remove bearing shim.

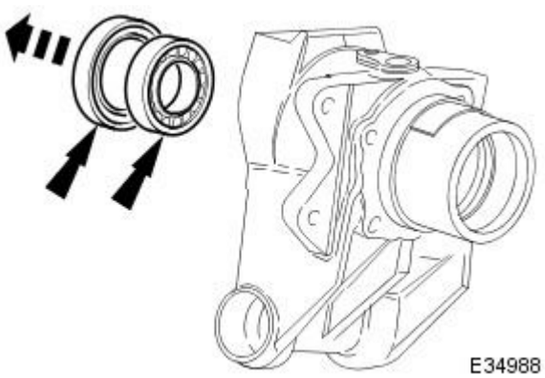

31. Remove inner seal and bearing from hub carrier.

- Using a drift, remove and discard inner seal.
- Remove and discard inner bearing.

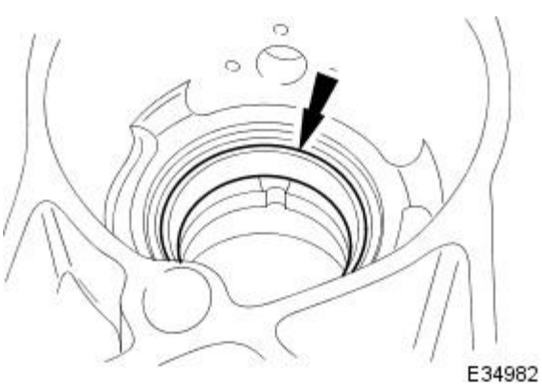

32. Remove inner bearing cup from hub carrier.

- Position hub carrier on a block of wood.
- Using a drift, remove and discard inner bearing cup.

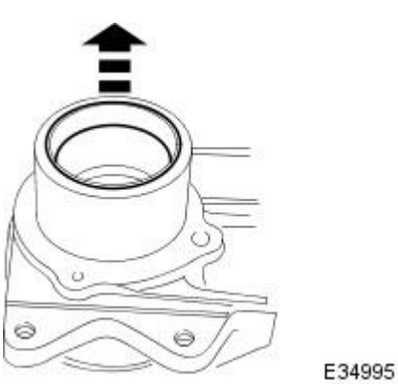

33. Remove outer bearing cup from hub carrier.

- Position hub carrier on a block of wood.
- Using a drift, remove and discard outer bearing cup.

34. Clean hub and hub carrier.

Installation

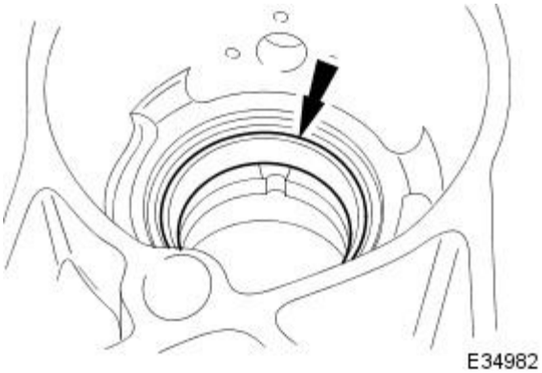

1. Place hub carrier on press bed and insert inner bearing cup.

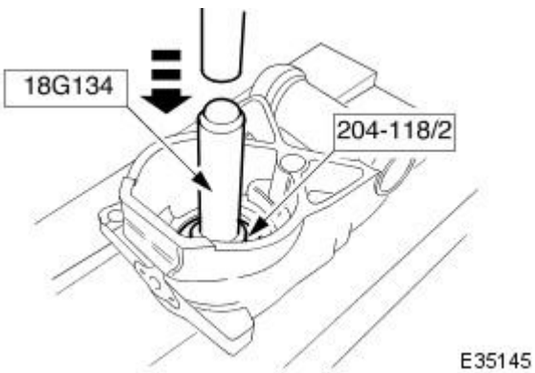

2. Using a hydraulic press, install new inner bearing cup in hub carrier.

- Install special handle 18G134 to tool 204-118/2.
- Align special tool 204-118/2 to bearing cup.
- Align assembly to ram, and operate press to fully seat bearing cup.

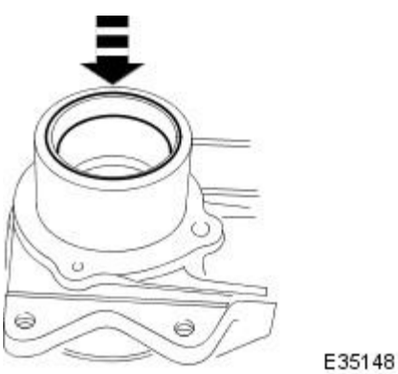

3. Place hub carrier on press-bed and insert outer bearing cup.

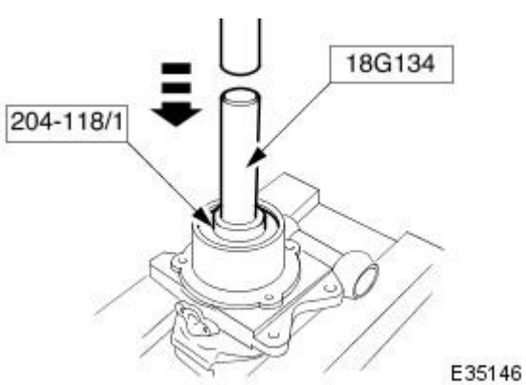

4. Using a hydraulic press, install outer bearing cup in hub carrier.

1. Install special handle 18G134 to tool 204-118/1
2. Align special tool 204-118/1 to bearing cup.

- Align assembly to ram, and operate press to fully seat bearing cup.

5. Place hub carrier on a work bench.

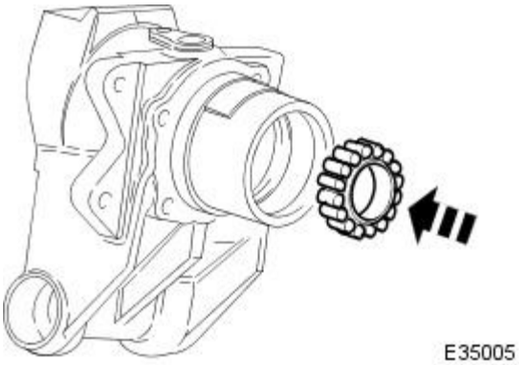

6. Install outer bearing in hub carrier.

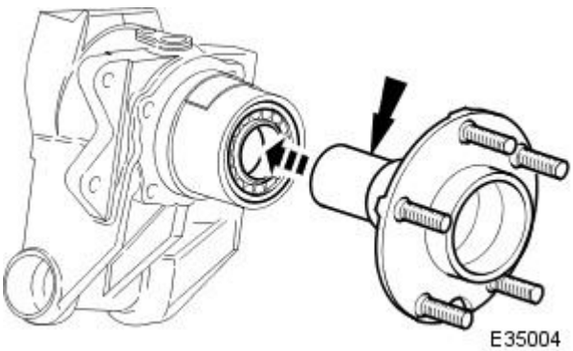

7. Install hub in outer bearing and carrier.

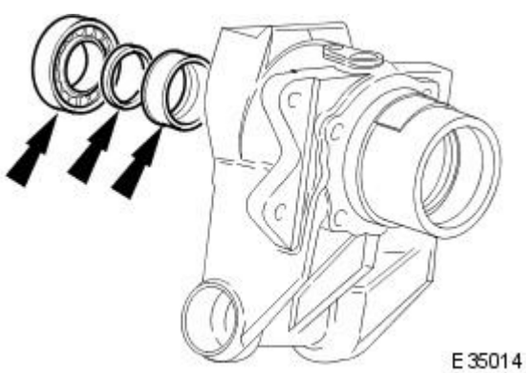

8. Install inner bearing in hub carrier.

1. Install bearing spacer to hub.
2. Install a 3.47 mm (maximum thickness) shim on hub.
3. Install inner bearing in hub carrier.

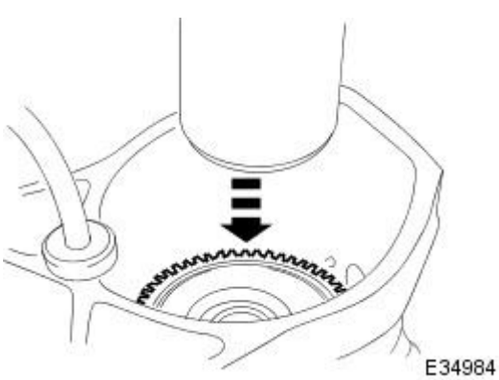

9. CAUTION: Do not allow press load to be directed on to hub studs.

Using a hydraulic press, install ABS-sensor rotor to hub.

- Place block of wood on press-bed.
  1. Position hub carrier on block of wood.
  2. Position ABS-rotor sensor to hub.
- Align assembly to press-ram, and operate press to install ABS-sensor rotor to hub.

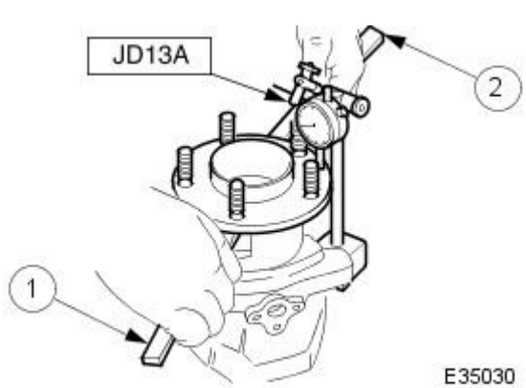

10. CAUTION: Do not use excessive force when levering hub.

Measure hub end-float.

- Secure hub carrier in vice.
- Install special tool JD15 to hub.
  1. Install dial gauge JD 13A on hub carrier.
  2. Using two levers, measure and record hub end-float.
- Remove special tools from hub carrier.

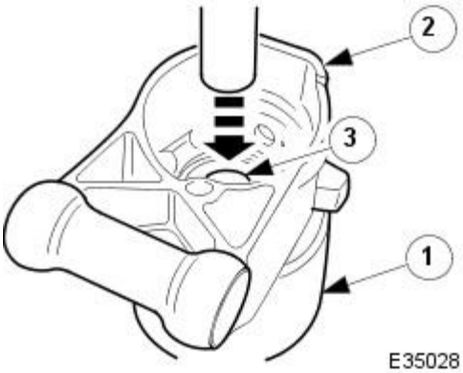

11. Using hydraulic press, remove hub and outer bearing assembly from carrier.

1. Position large section of special tool JD132 on press bed, with recess in tool upper most.
2. Position hub carrier on tool, ensuring parking brake cable housing locates in tool recess.
3. Position small section of special tool JD132 on hub.

- Align assembly to press-ram, and operate press to remove hub from hub carrier.

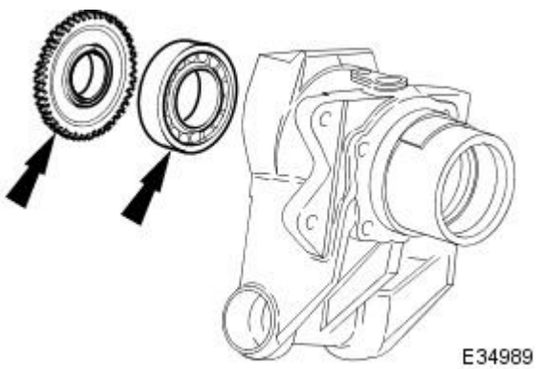

12. Remove ABS rotor and inner bearing from hub carrier.

- Remove ABS rotor.
- Remove inner bearing.

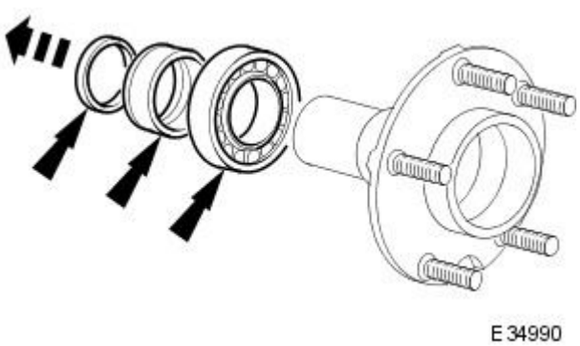

13. Remove outer bearing assembly from hub.

- Remove bearing shim.
- Remove bearing spacer.
- Remove outer bearing.

14. Pack new inner and outer bearings with Shell Retinax 'A' grease.

15. Install outer bearing and using special tool 205-234, fully seat seal in hub carrier.

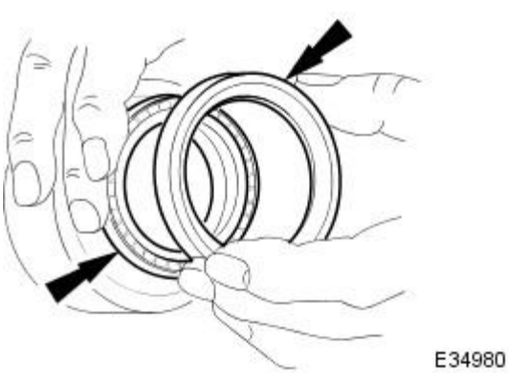

16. Using a press, install hub in carrier/bearing assembly.

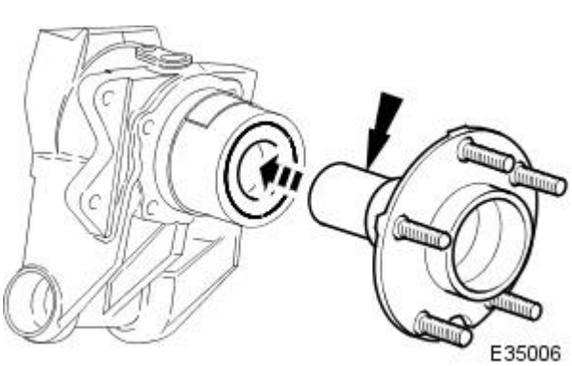

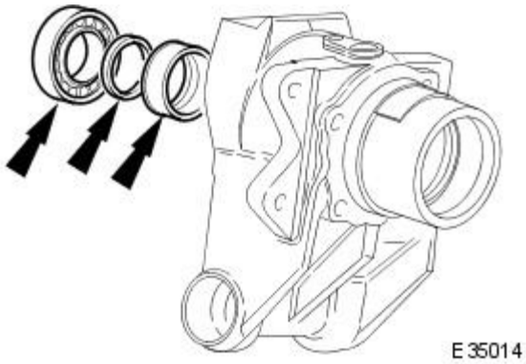

17. Install inner bearing assembly.

1. Install bearing spacer.
2. Install bearing shim.
3. Install inner bearing.

18. Determine hub end float.

- Measure and record end-float as a datum.
- Calculating from datum, select a shim that will achieve a 0.076 mm end-float.

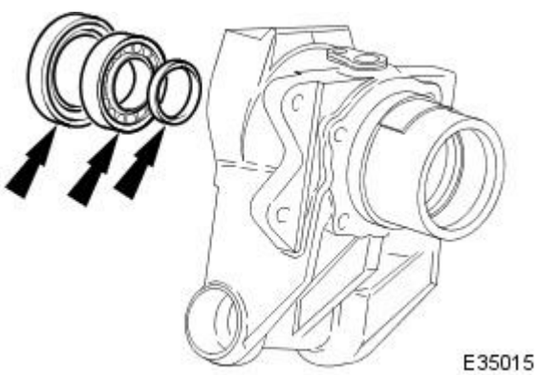

19. Install new bearing shim.

1. Install selected shim.
2. Install inner bearing.
3. Using special tool 205-234, install inner bearing seal.

20. Place block of wood on hydraulic press-bed and position hub carrier on block.

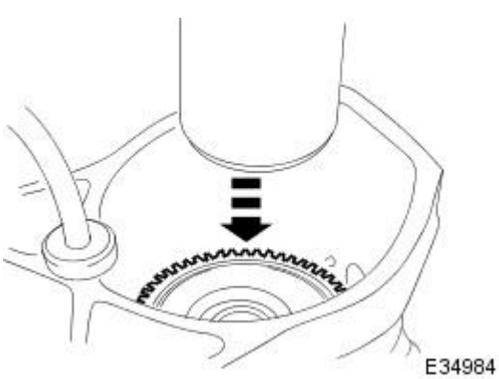

21. CAUTION: Do not allow press load to be directed on to hub studs.

Align ABS rotor to hub and operate press to fully seat rotor on hub.

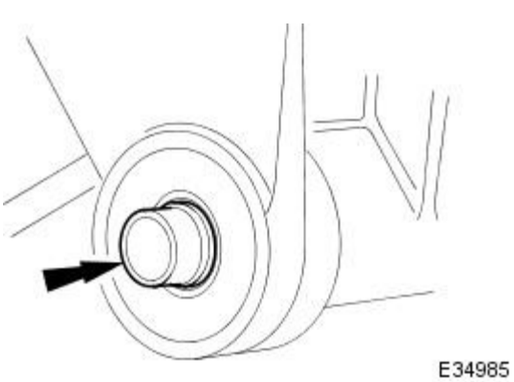

22. Install pivot pin sleeve in carrier bearings.

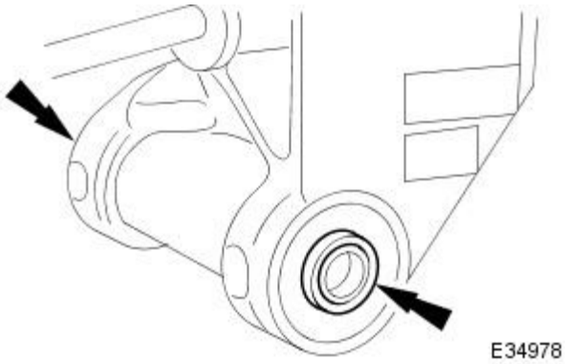

23. Install shims on pivot pin sleeve in positions noted during removal.

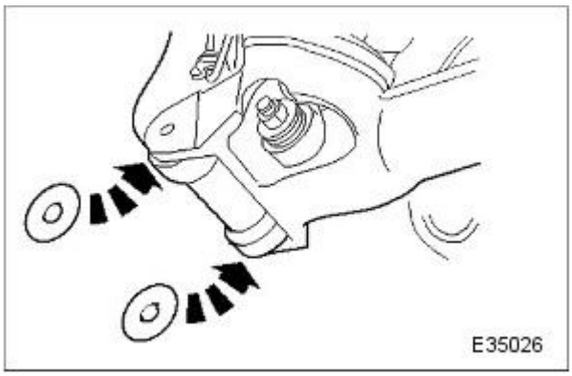

24. Position hub carrier assembly on wishbone.

1. Ensuring shims remain positioned on sleeve, position hub carrier assembly on wishbone.

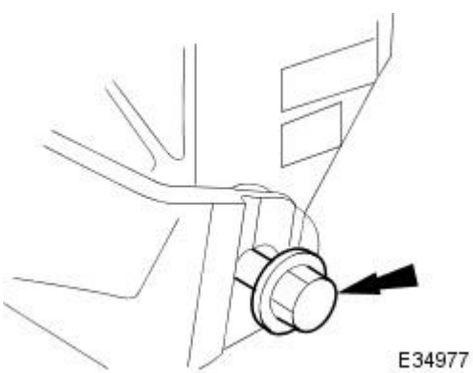

25. Install hub assembly to wishbone and axle assembly.

- Position hub and carrier to wishbone and axle shaft.
- Install pivot pin in sleeve with threaded end at front.

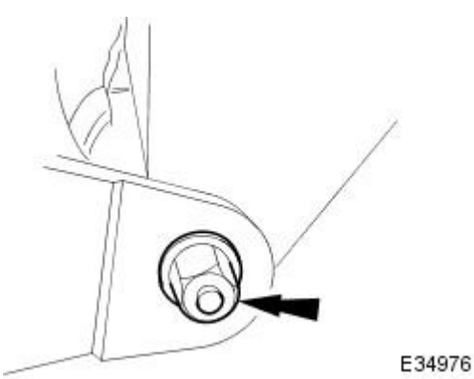

26. Install washer and nut on pivot pin, but DO NOT tighten nut.

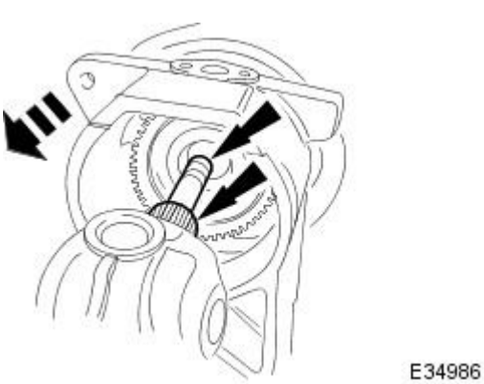

27. Install hub on axle shaft .

- Route parking brake cable through hub carrier aperture and install grommet.
- Apply Loctite 270 to axle shaft splines and thread, and fully seat hub on shaft.

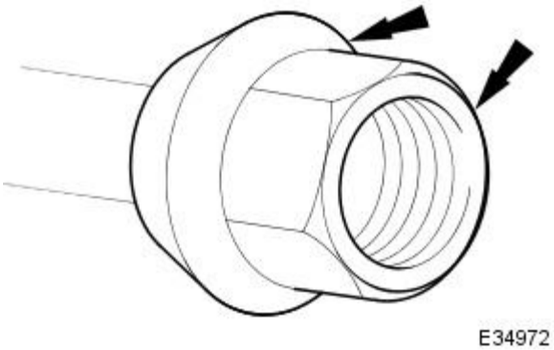

28. Install locating collar and hub nut on axle shaft, but DO NOT tighten hub nut.

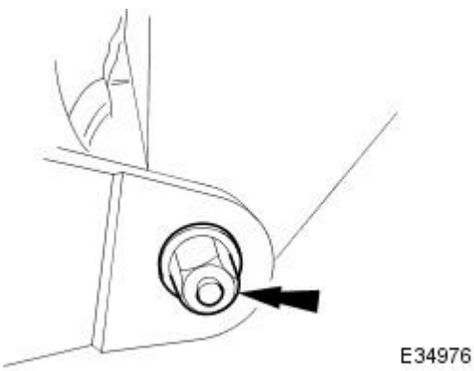

29. Tighten pivot pin nut to 90-110Nm .

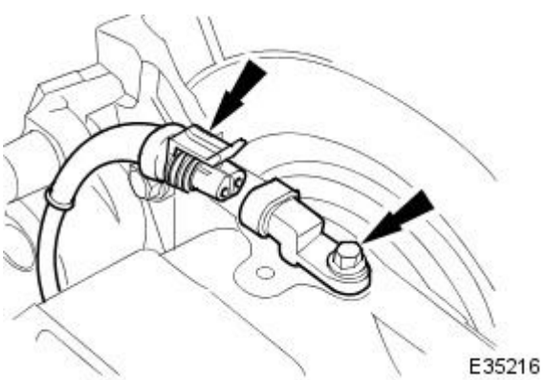

30. Install wheel speed sensor on hub carrier.

- Position sensor on hub carrier and install and tighten bolt to 7-10Nm.
- Connect wheel speed sensor harness to sensor.

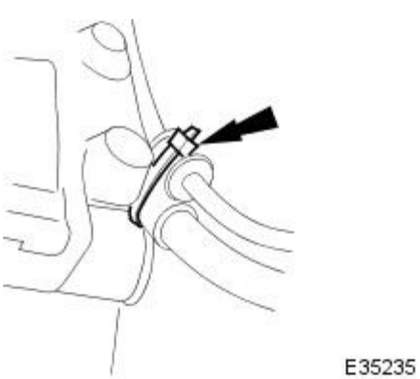

31. Using new tie strap, secure wheel speed sensor harness to hub carrier.

32. Install handbrake shoes. Refer to operation 70.40.05.

33. Install brake disc. Refer to operation 70.10.13.

34. Position special tool 204-195 on hub studs and install nuts.

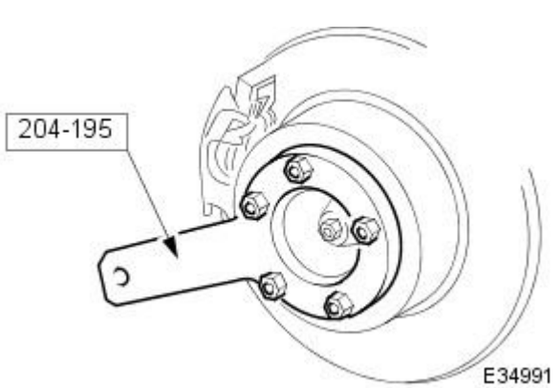

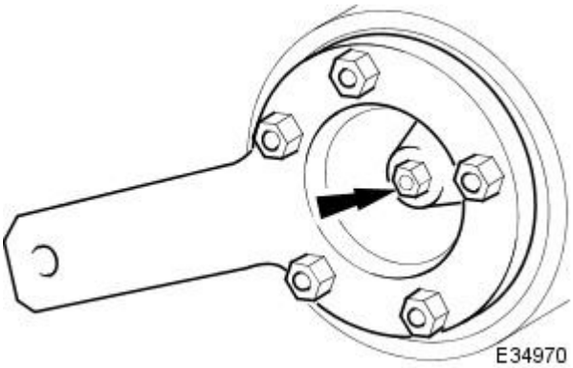

35. Tighten hub nut to 304-336Nm.

36. Remove securing nuts and withdraw special tool 204-195 from hub.

37. Install rear wheel. Refer to Section 204-04.

38. Remove stands and lower vehicle onto wheels. Refer to section 100-02.

39. Raise vehicle on four-post lift.

40. Route parking brake cable through suspension mounting bracket and secure with clip.

41. Route parking brake LH cable through equalizer.

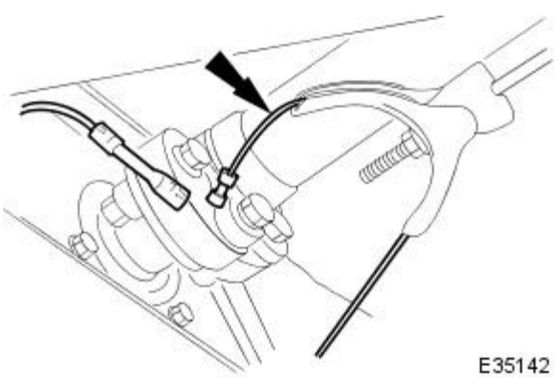

42. Install LH cable in connecting clip.

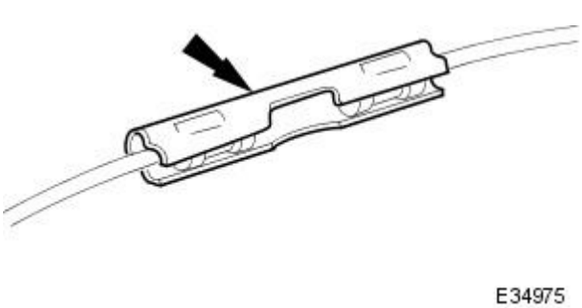

43. Adjust parking brake cable. Refer to 70.35.10.

44. Lower four-post lift

45. Apply parking brake.

Rear Suspension - Wheel Hub Seal

Removal and Installation

Special Tool(s)	
E36458	Hub Holding Tool 204-195 (JD227)
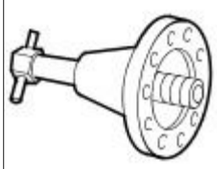 E36452	Hub Puller 204-011 (JD 1D)
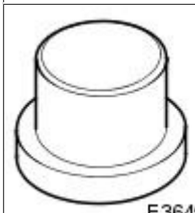 E36453	Rear-Hub Remover 204-113 (JD 132)
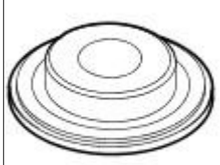 E36454	Oil Seal Remover/Replacer 205-234 (JD 550-1)

Removal

CAUTION: Replacement of nuts and bolts: Various thread-locking devices are used on nuts and bolts throughout the vehicle. These devices restrict the number of times a nut or bolt can be used. See section 100-00 for information.

1. Release parking brake.
2. Raise the vehicle on a four-post lift.
3. Fully slacken but do not remove parking brake cable adjuster nut.

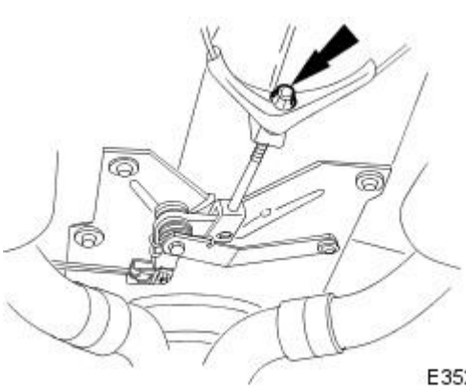

E35206

4. Release appropriate side parking brake cable from connecting clip.

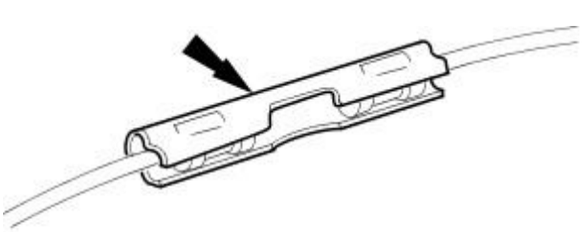

E34975

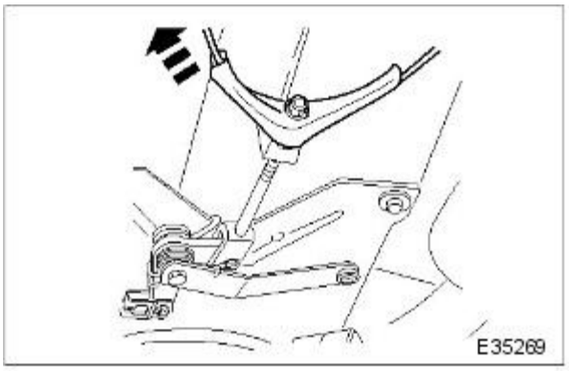

5. Withdraw parking brake cable through equalizer (LH side cable only).

6. Lower four-post lift.

7. Raise rear of vehicle to working height and support on stands. Refer to section 100-02.

8. Remove rear wheel. Refer to section 204-04.

9. Position special tool (204-195) on hub studs and install securing nuts.

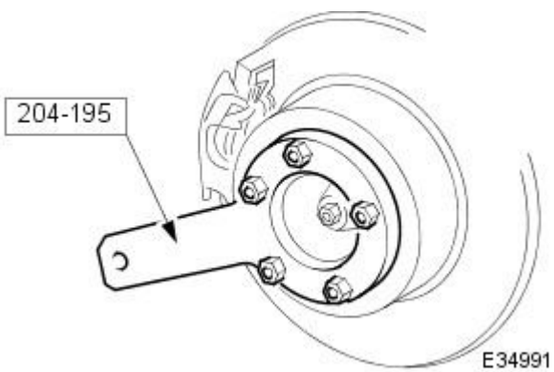

10. Slacken but do not remove hub to axle shaft securing nut.

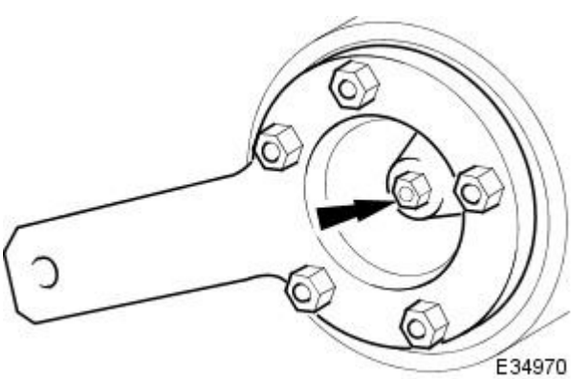

11. Remove nuts and withdraw special tool (204-195) from hub.

12. Remove rear brake disc. Refer to 70.10.13.

13. Remove parking brake shoes. Refer to 70.40.05.

14. Remove wheel speed sensor.

- Disconnect wheel speed sensor harness connector.
- Remove sensor bolt and withdraw sensor from hub carrier.

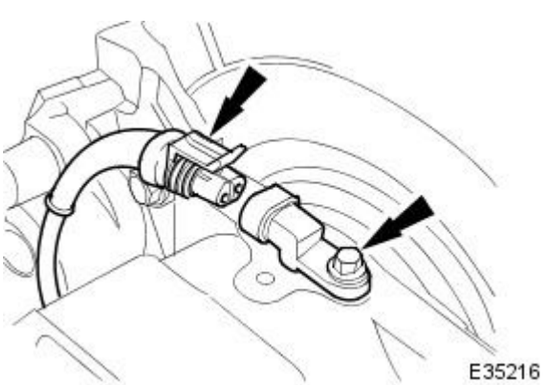

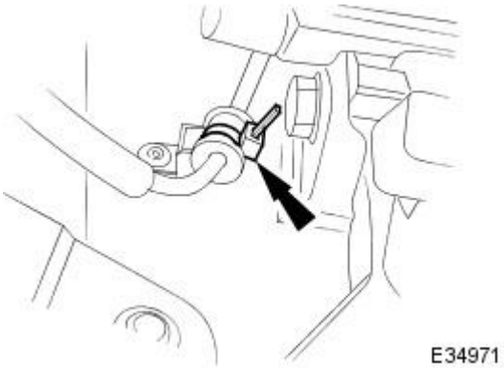

15. Sever and discard wheel speed sensor harness tie strap and position harness for access.

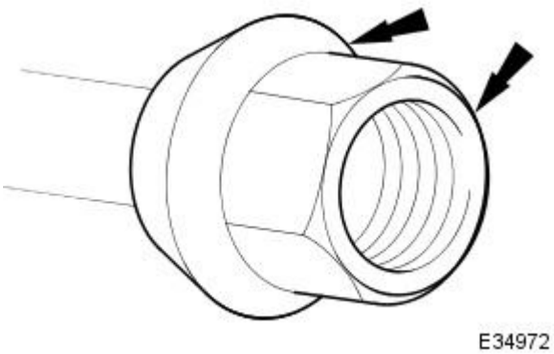

16. Remove hub nut and collar.

- Remove nut.
- Remove locating collar.

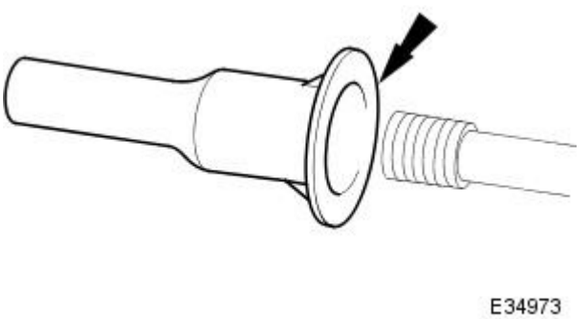

17. Install thread protector on axle shaft.

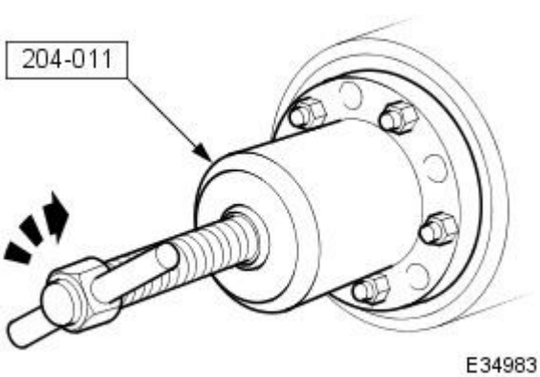

18. Release hub from axle shaft.

- Position hub puller on hub studs. (204-011)
- Install nuts.
- Progressively tighten puller center bolt to release hub from axle shaft splines.

19. Remove hub puller and thread protector.

- Remove nuts and release puller from hub.
- Remove thread protector from axle shaft.

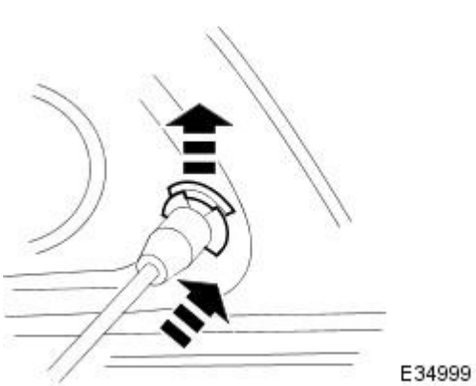

20. Release parking brake cable from suspension mounting bracket.

- Remove cable retaining clip.
- Draw cable through suspension mounting bracket aperture.

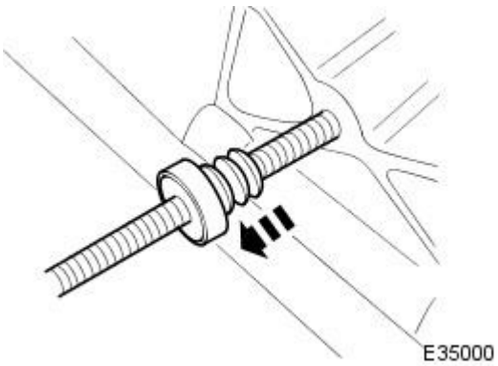

21. Remove parking brake cable to hub carrier grommet.

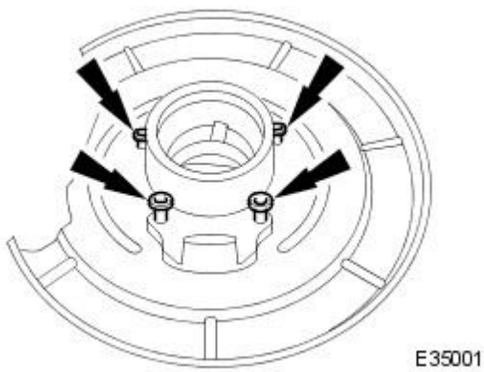

22. Remove back plate.

- Remove two bolts and two screws securing back plate to hub carrier.
- Withdraw back plate complete with parking brake cable.

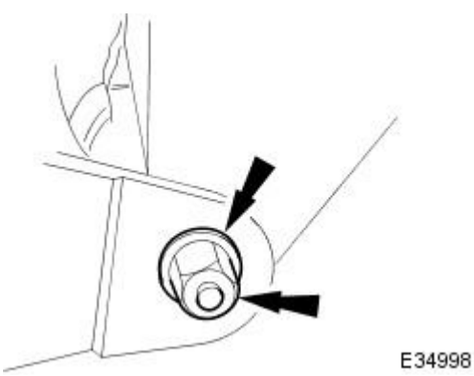

23. Remove nut and washer from pivot pin.

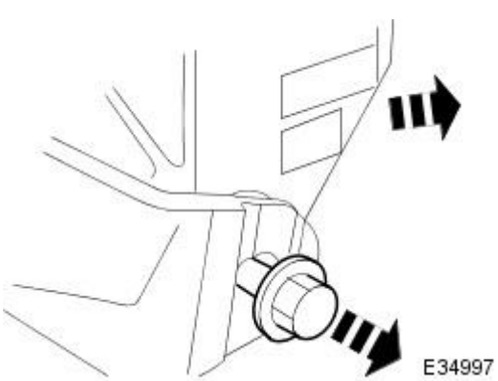

24. Remove hub and carrier from wishbone and axle shaft.

- Withdraw pivot pin and remove hub and carrier assembly.

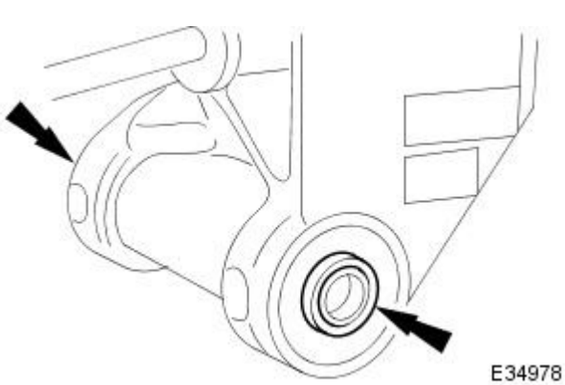

25. CAUTION: Note position of shims during removal. They must be returned to their original positions during installation.

Noting positions, remove shim from each end of pivot pin sleeve.

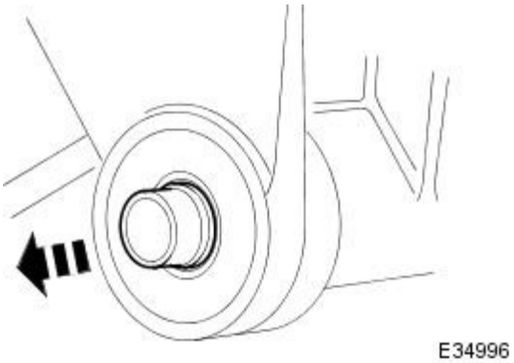

26. Withdraw pivot pin sleeve from hub carrier.

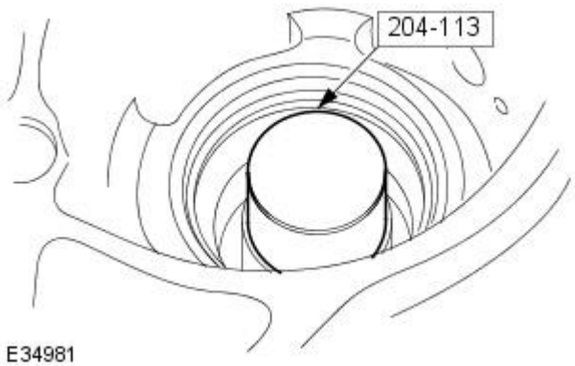

27. Using a hydraulic press, remove hub from carrier.

- Place large section of special tool on press bed, with recess in tool uppermost. (204-113)
- Position hub carrier on tool, ensuring handbrake cable housing locates in tool recess.
- Position small section of special tool on hub. (204-113)
- Align tool to press-ram, and operate press to remove hub from hub carrier.

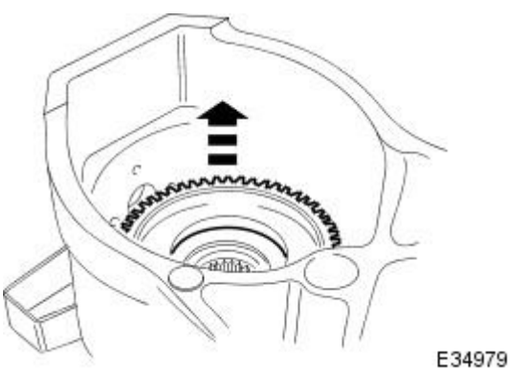

28. Place hub carrier on a work bench.

29. Withdraw ABS rotor from hub carrier.

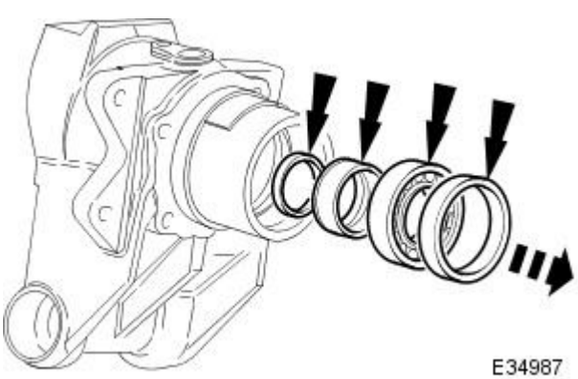

30. Remove outer seal and bearing assembly from hub carrier.

- Using a drift, remove and discard outer seal.
- Remove outer bearing.
- Remove bearing spacer.
- Remove bearing shim.

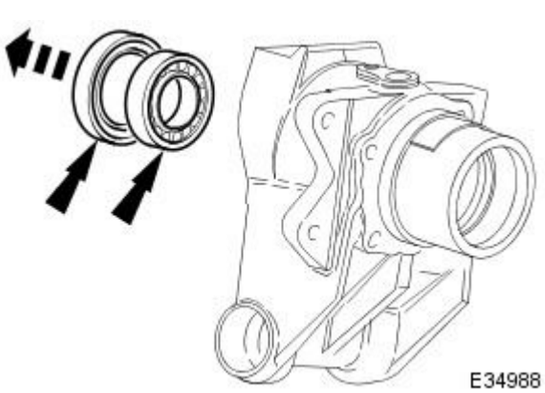

31. Remove inner seal and bearing from hub carrier.

- Using a drift, remove and discard inner seal.
- Remove inner bearing.

32. Using approved cleaning agents:

- Wash and thoroughly dry inner and outer bearings.
- Thoroughly clean hub carrier paying particular attention to bearing cups.
- Thoroughly clean hub.

Installation

1. Grease bearings.

- Pack inner and outer bearing races with Shell Retinax 'A' grease:
- Apply a film of shell Retinax 'A' grease to bearing cups

2. Install outer bearing in hub carrier and fully seat new seal using special tool 205-234.

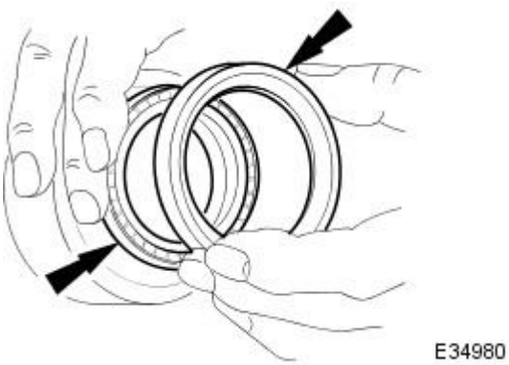

3. Apply a thin film of Shell Retinax 'A' grease to hub shaft and install hub in carrier/bearing assembly.

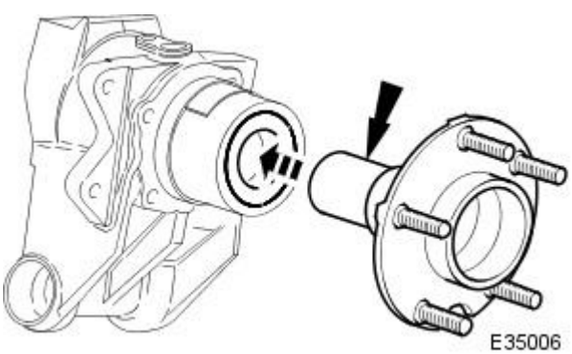

4. Install inner bearing assembly and seal.

1. Install bearing spacer.
2. Install bearing shim.
3. Install inner bearing.
4. Install and fully seat new inner bearing seal using special tool 205-234.

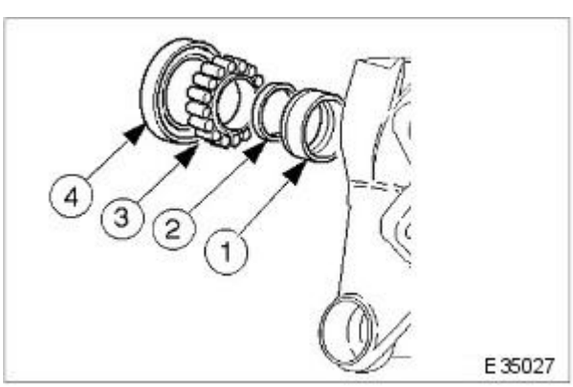

5. Place block of wood on hydraulic press-bed and position hub carrier on block.

6. CAUTION: Do not allow press load to be directed onto hub studs.

Align ABS rotor to hub and operate press to fully seat rotor on hub.

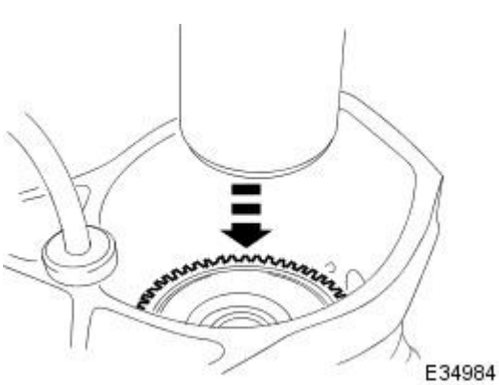

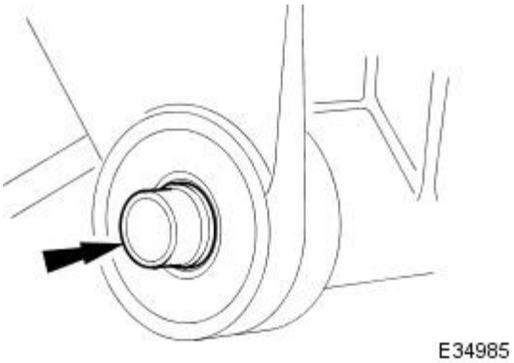

7. Install pivot pin sleeve in carrier bearings.

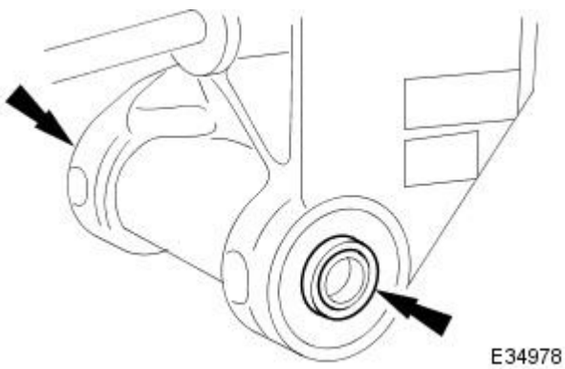

8. Install shims on pivot pin sleeve in positions noted during removal.

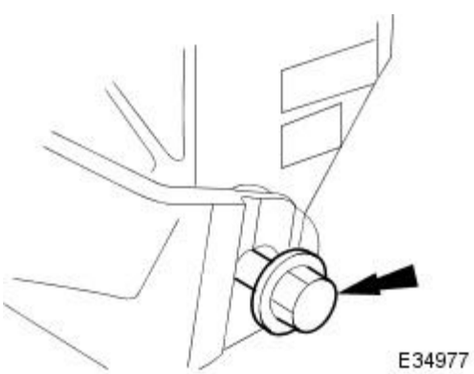

9. Install hub assembly to wishbone and axle assembly.

- Position hub and carrier to wishbone and axle shaft.
- Install pivot pin in sleeve with threaded end at front.

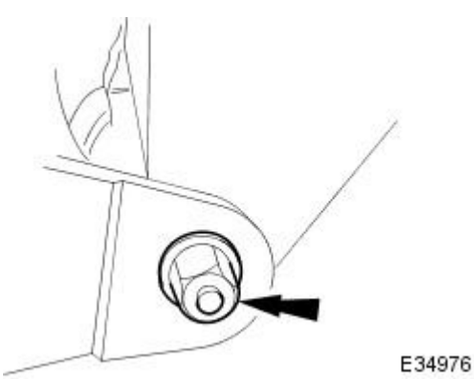

10. Install washer and nut on pivot pin, but DO NOT tighten nut.

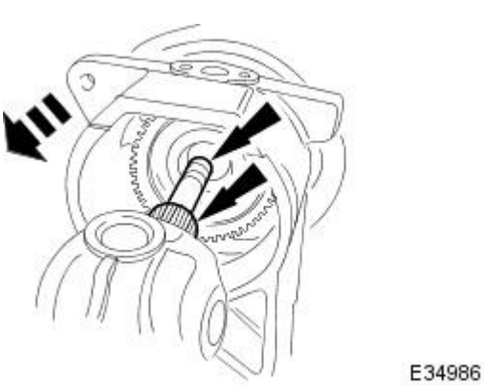

11. Install hub on axle shaft .

- Route parking brake cable through hub carrier aperture and install grommet.
- Apply Loctite 270 to axle shaft splines and thread, and fully seat hub on shaft.

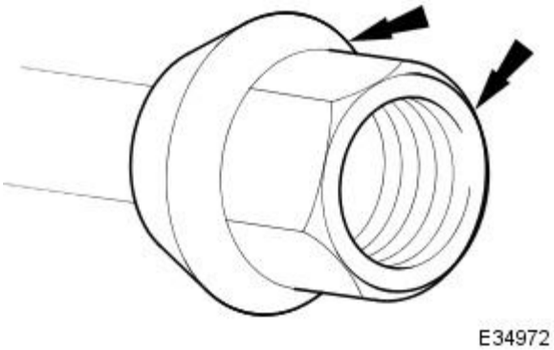

12. Install locating collar and hub nut on axle shaft, but DO NOT tighten hub nut.

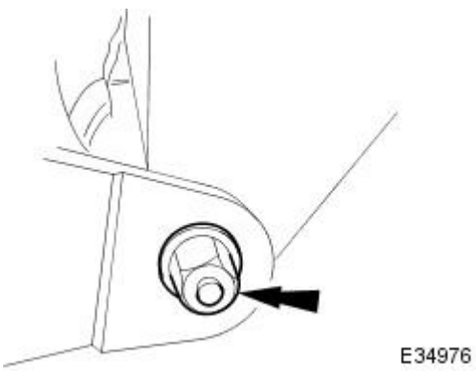

13. Tighten pivot pin nut to 90-110Nm .

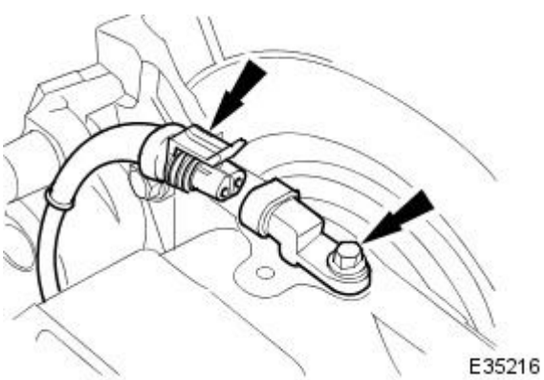

14. Install wheel speed sensor on hub carrier.

- Position sensor on hub carrier and install and tighten bolt to 7-10Nm.
- Connect wheel speed sensor harness to sensor.

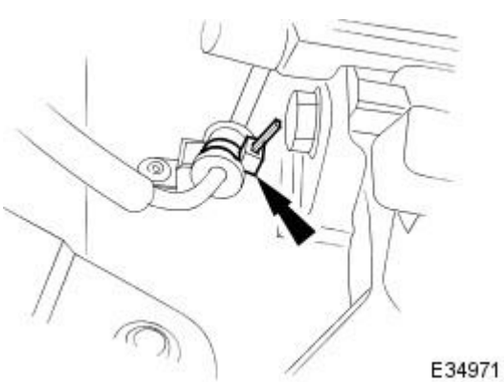

15. Using new tie strap, secure wheel speed sensor harness to hub carrier.

16. Install handbrake shoes. Refer to operation 70.40.05.

17. Install brake disc. Refer to operation 70.10.13.

18. Position special tool (204-195) on hub studs and install securing nuts.

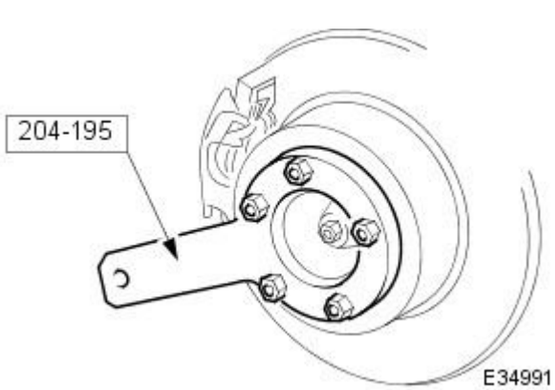

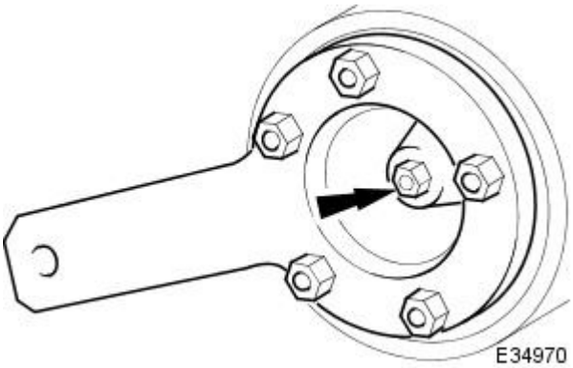

19. Tighten hub nut to 304-336Nm.

20. Remove securing nuts and withdraw special tool (204-195) from hub.

21. Install rear wheel. Refer to Section 204-04.

22. Raise rear of vehicle, remove stands and lower vehicle. Refer to section 100-02.

23. Raise vehicle on four-post lift.

24. Route parking brake cable through suspension mounting bracket and secure with clip.

25. Route parking brake cable through equalizer (LH side cable only).

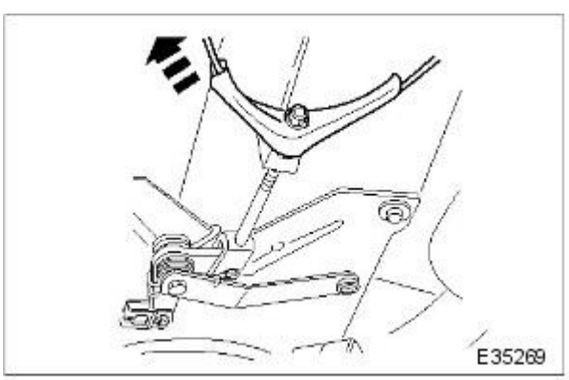

26. Install parking brake cable in connecting clip.

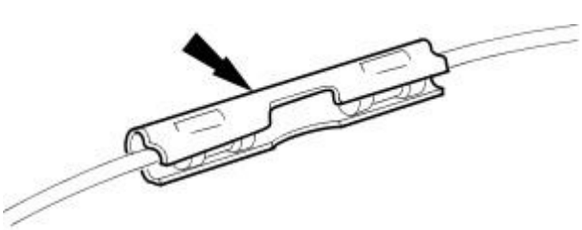

E34975

27. Adjust parking brake cable. Refer to 70.35.10.

28. Lower four-post lift

29. Apply parking brake.

Rear Suspension - Wheel Knuckle Bushing

Removal and Installation

Special Tool(s)	
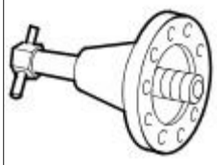 E36452	Hub Puller 204-011 (JD 1D)
E36458	Hub Holding Tool 204-195 (JD227)
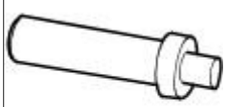 E36457	Driver Handle 100-013 (18G 134)
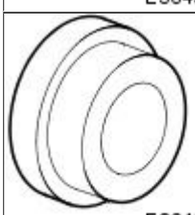 E36459	Bearing Cup Replacer Adaptor 204-120 (JD 550-6)

Removal

CAUTION: Replacement of nuts and bolts: Various thread-locking devices are used on nuts and bolts throughout the vehicle. These devices restrict the number of times a nut or bolt can be used. See section 100-00 for information.

1. Release parking brake.
2. Raise the vehicle on a four-post lift.
3. Fully slacken but do not remove parking brake cable adjuster nut.

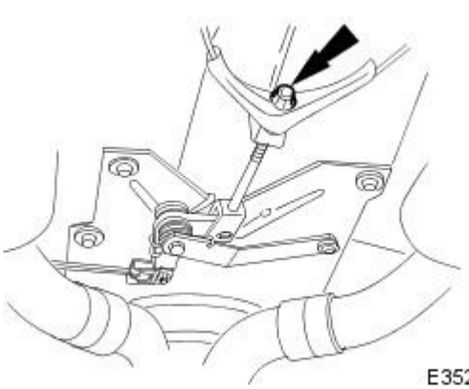

E35206

4. Release appropriate side parking brake cable from connecting clip.

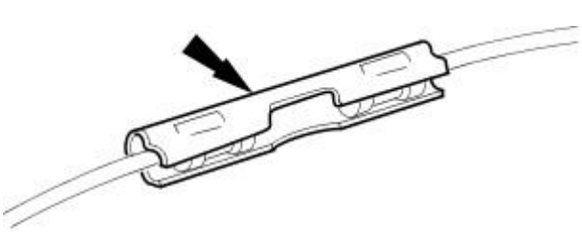

E34975

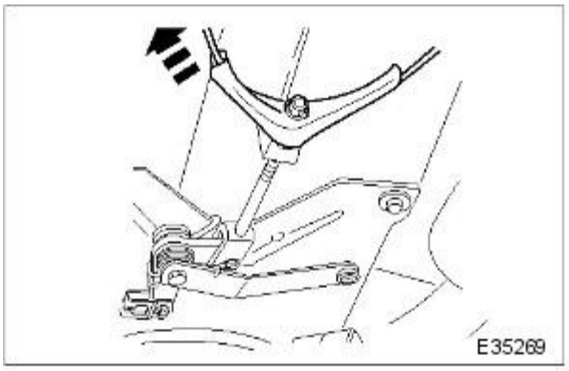

5. Withdraw parking brake cable through equalizer (LH side cable only).

6. Lower four-post lift.

7. Raise rear of vehicle to working height and support on stands. Refer to section 100-02.

8. Remove road wheel. Refer to section 204-04.

9. Position special tool (204-195) on hub studs and install securing nuts.

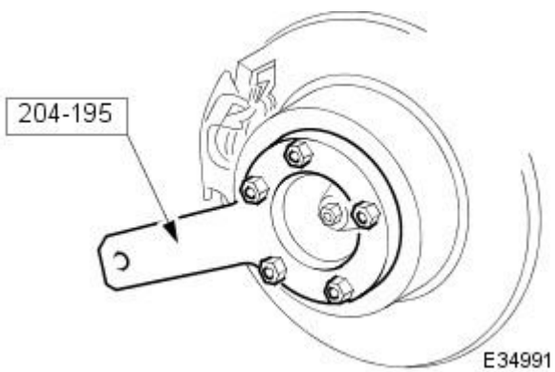

10. Slacken but do not remove hub to axle shaft securing nut.

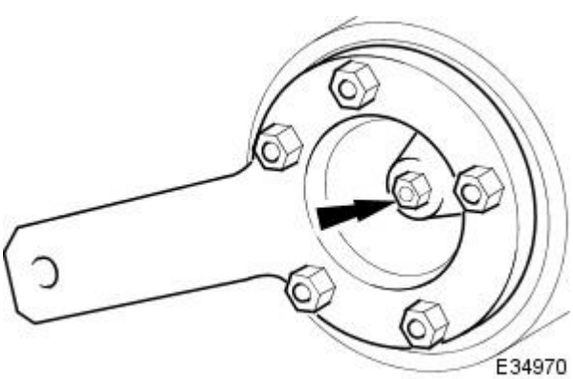

11. Remove nuts from studs and withdraw special tool (204-195) from hub.

12. Remove rear brake disc. Refer to 70.10.13.

13. Remove handbrake shoes. Refer to 70.40.05.

14. Remove wheel speed sensor.

- Disconnect wheel speed sensor harness connector.
- Remove sensor bolt and withdraw sensor from hub carrier.

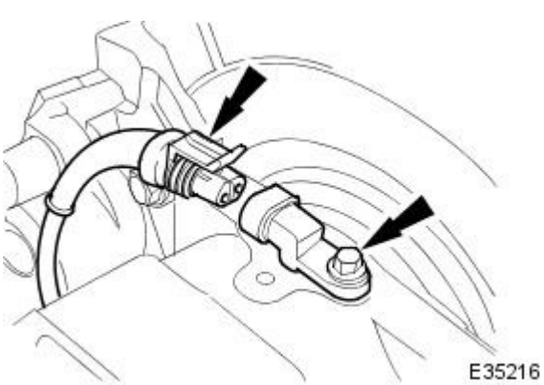

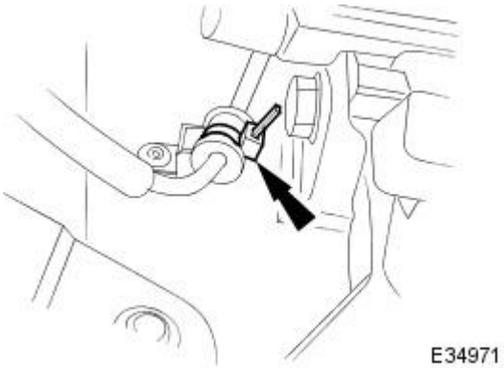

15. Remove wheel speed sensor harness tie strap and position harness for access.

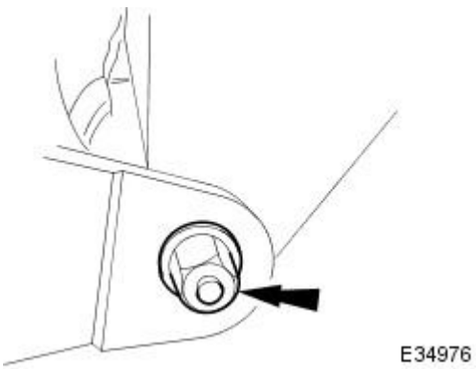

16. Remove nut and washer from pivot pin.

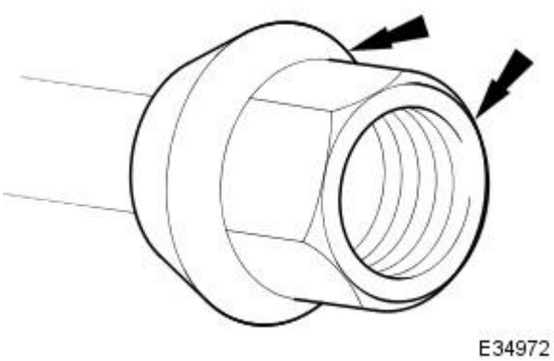

17. Remove hub nut and collar.

- Remove nut.
- Remove locating collar.

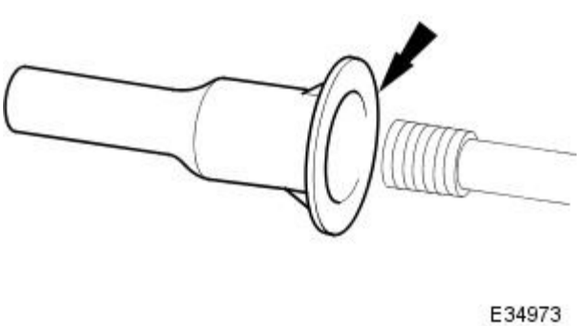

18. Install thread protector on axle shaft.

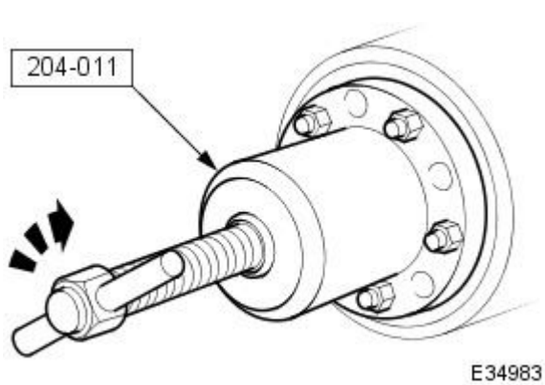

19. Release hub from axle shaft.

- Position hub puller 204-011 on hub studs.
- Install securing nuts.
- Progressively tighten puller center bolt to release hub from axle shaft splines.

20. Remove nuts and release puller from hub.

21. Remove thread protector from axle shaft.

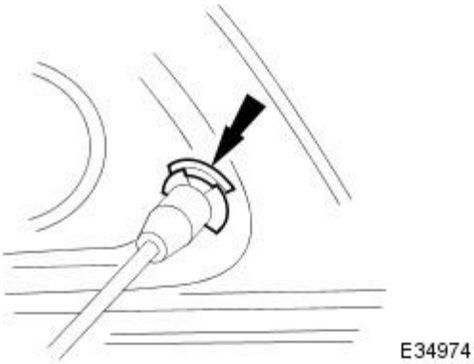

22. Release handbrake cable from suspension mounting bracket.

- Remove cable retaining clip.
- Draw cable through suspension mounting bracket aperture.

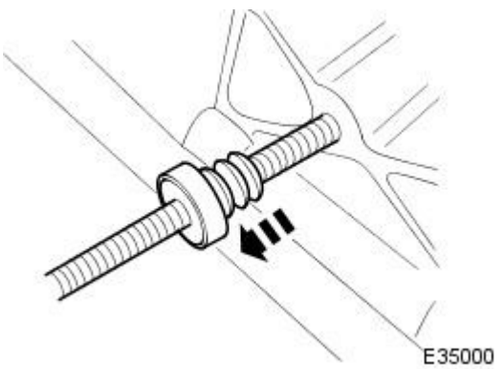

23. Remove parking brake cable to hub carrier grommet.

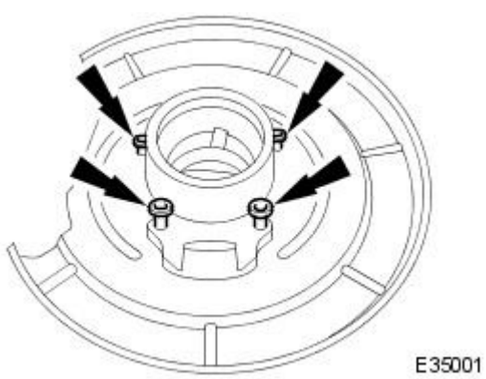

24. Remove back plate.

- Remove four screws securing back plate to hub carrier.
- Withdraw back plate complete with parking brake cable.

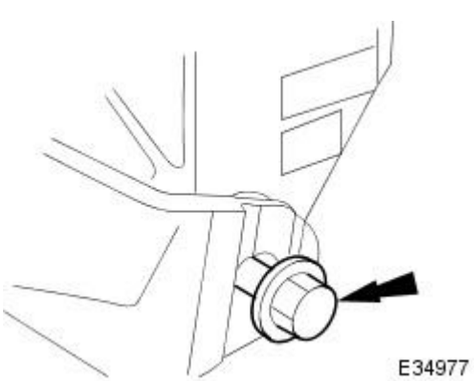

25. Remove hub and carrier.

- Withdraw pivot pin.
- Remove hub and carrier assembly from wishbone and axle shaft.

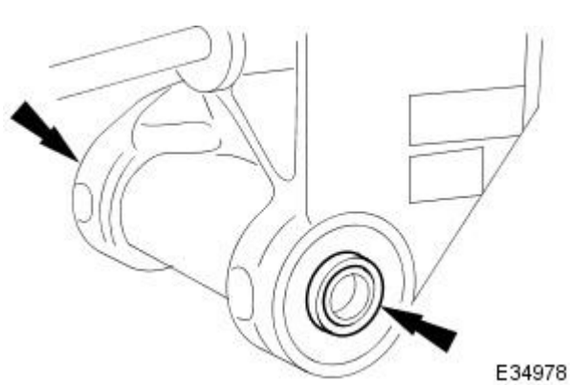

26. Remove shim from each end of pivot pin sleeve.

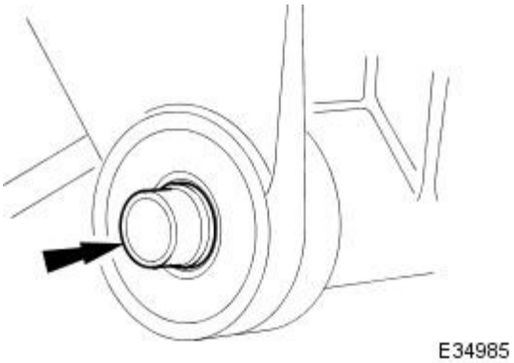

27. Withdraw pivot pin sleeve from hub carrier.

28. Secure hub carrier in a vice.

29. Remove and discard bearings from hub carrier.

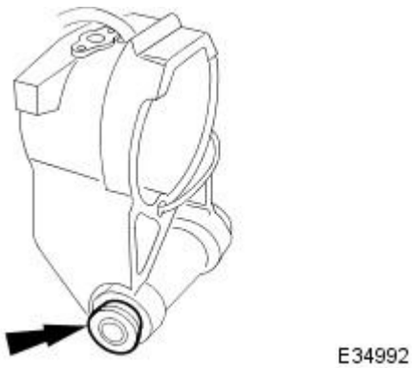

30. Remove bearing cup from hub carrier.

- Position hub carrier on a piece of wood.
- Position a long tapered drift in housing bore recess.
- Remove bearing cup.

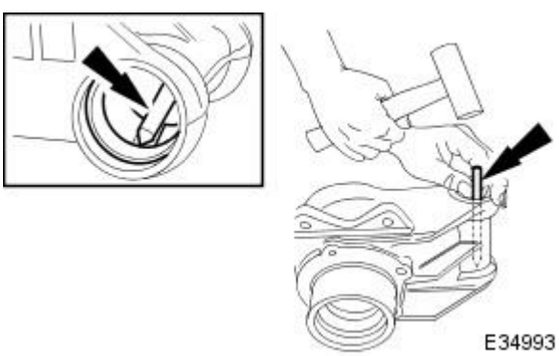

31. Repeat procedure to remove opposite end bearing cup and discard both cups.

32. Remove hub carrier from vice.

33. Thoroughly clean all components.

Installation

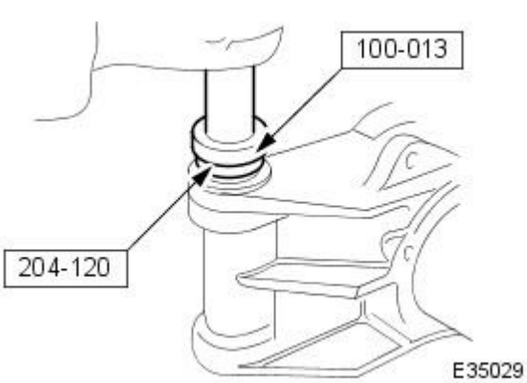

1. Using a hydraulic press, install new bearing cups in hub carrier.

- Using special tool 100-013 and adapter 204-120, align bearing cup to hub carrier.
- Align assembly to ram, and operate press to fully seat bearing cup. Repeat procedure to fit other bearing cup.

2. Secure hub carrier in a vice.

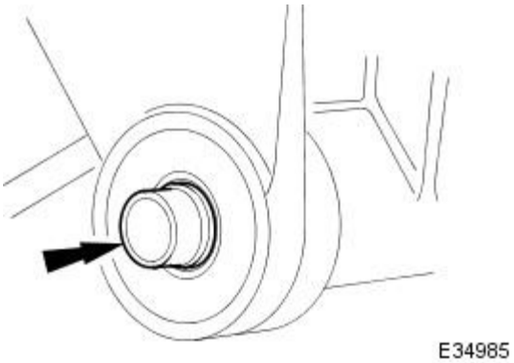

3. Install pivot pin sleeve in hub carrier.

4. Pack new pivot bearings with Shell Retinax 'A' grease.

5. Install pivot bearings in hub carrier.

1. Slide bearing over pivot sleeve and seat in bearing cup.
2. Install a 3.905 mm (minimum size) shim to sleeve.

- Repeat procedure to install opposite end bearing and shim.

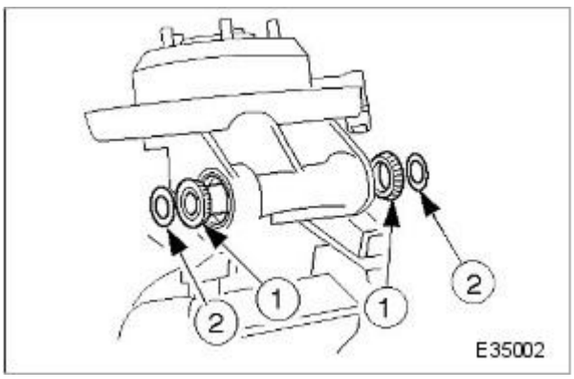

6. Press pivot pin sleeve into hub carrier.

1. Install pivot pin in sleeve.
2. Position a piece of tube over part of pin thread.
3. Install pivot pin nut and tighten until shims fully seat on pivot sleeve.

- Remove nut and tube.

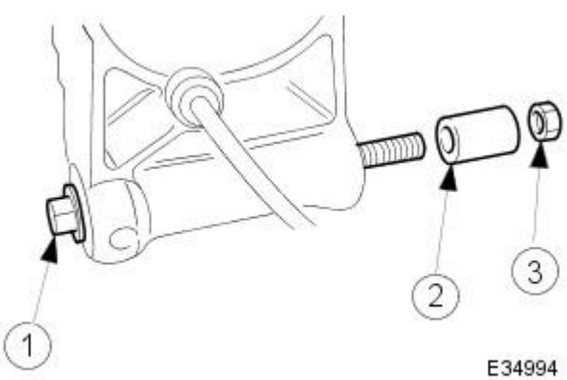

7. Measure bearing pre-load.

1. Position a flat washer to abut shim.
2. Install pivot pin nut.
3. Using a feeler gauge measure and record gap between shim and washer.

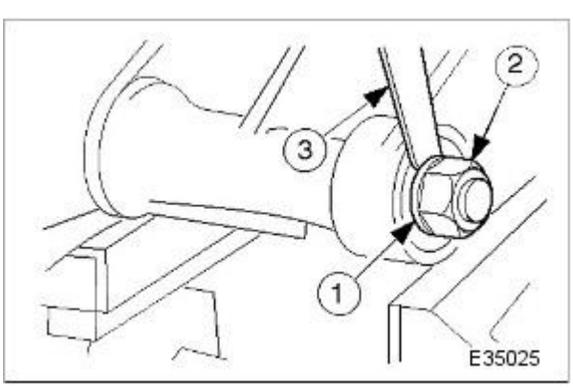

8. Remove shims from hub carrier.

1. Remove nut.
2. Remove washer.
3. Remove pivot pin.
4. Remove both shims from pivot sleeve.

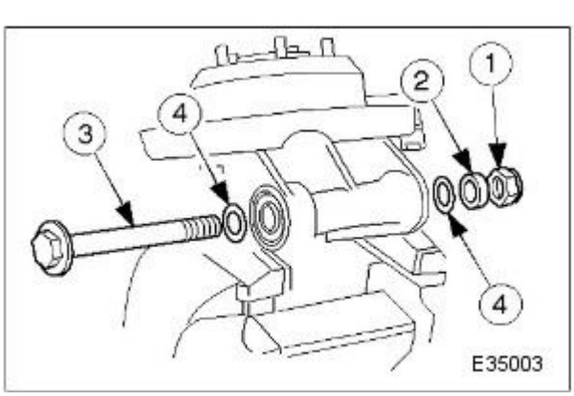

9. Using 3.905mm shim and pre-load measurements as a datum, select two new shims of equal thickness to provide a pre-load measurement of 0.076 mm.

10. Position shims on pivot sleeve.

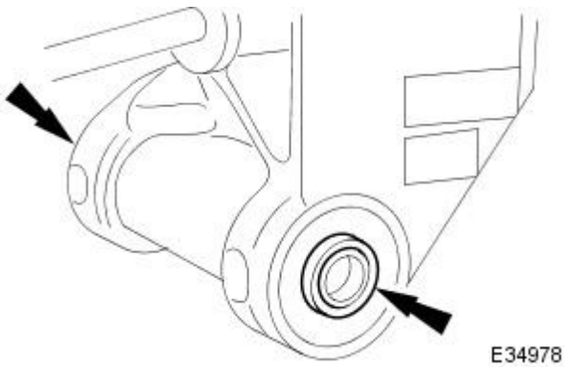

11. Press selected shims into hub carrier.

1. Install pivot pin in sleeve.
2. Position piece of tube over part of pivot pin thread.
3. Install nut to fully seat shims on sleeve.

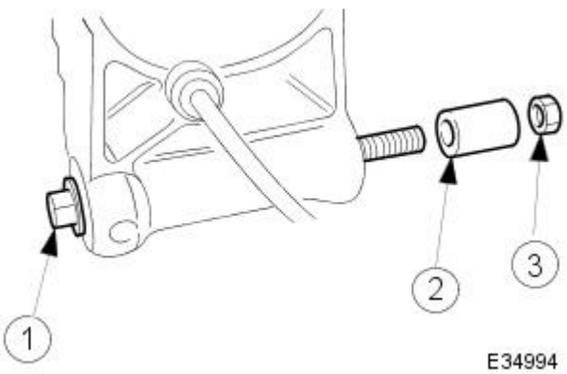

12. Remove nut, tube and pivot pin from hub carrier.

13. Position hub carrier assembly on wishbone.

1. Ensuring shims remain positioned on sleeve, position hub carrier assembly on wishbone.

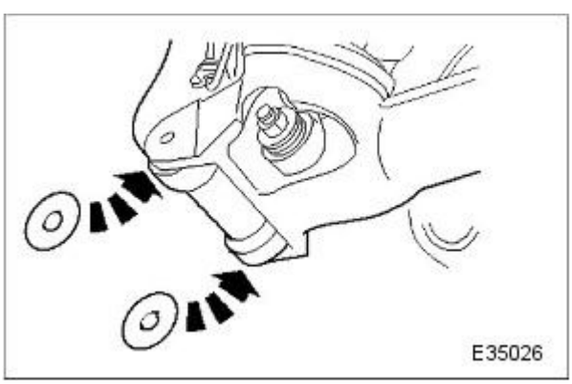

14. Secure hub carrier to wishbone.

- Install pivot pin.
- Install pivot pin washer
- Install but do not tighten pivot pin nut.

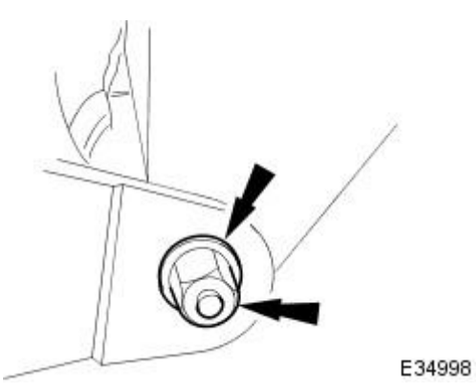

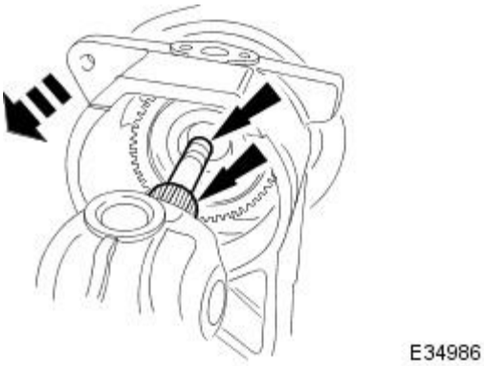

15. Install hub on axle shaft .

- Route handbrake cable through hub carrier.
- Apply Loctite 270 to axle shaft splines and thread, and fully seat hub on shaft.

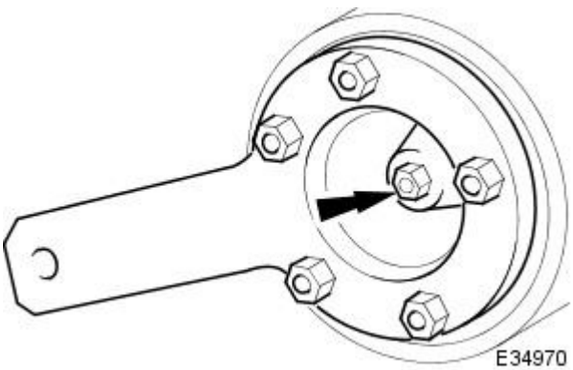

16. Install locating collar and hub nut on axle shaft, but DO NOT tighten hub nut.

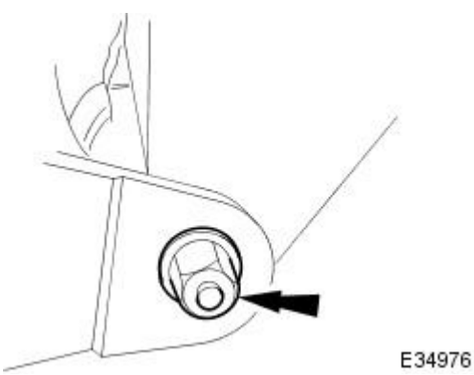

17. Tighten pivot pin nut to 90-110Nm.

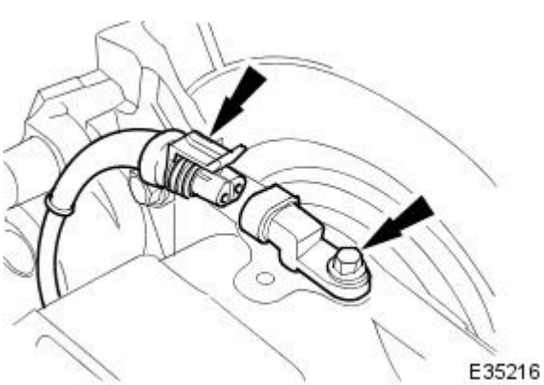

18. Install wheel speed sensor on hub carrier.

- Position sensor on hub carrier and install and tighten bolt to 7-10Nm.
- Connect wheel speed sensor harness to sensor.

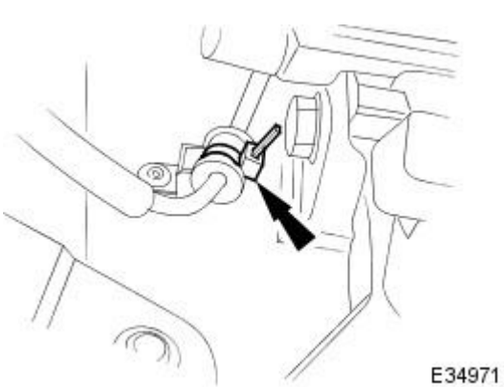

19. Using new tie strap, secure wheel speed sensor harness to hub carrier.

20. Install parking brake shoes. Refer to 70.40.05.

21. Install brake disc. Refer to operation 70.10.13.

22. Install special tool (204-195) on studs and install nuts.

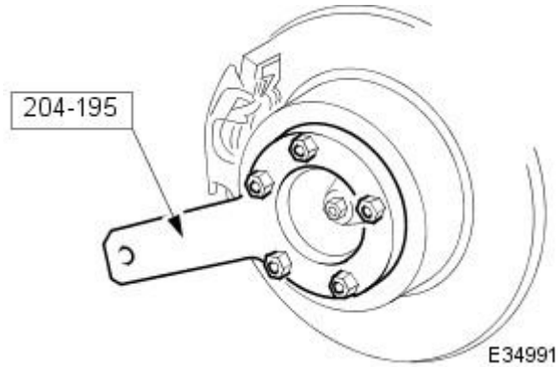

23. Tighten hub nut to 304-336Nm.

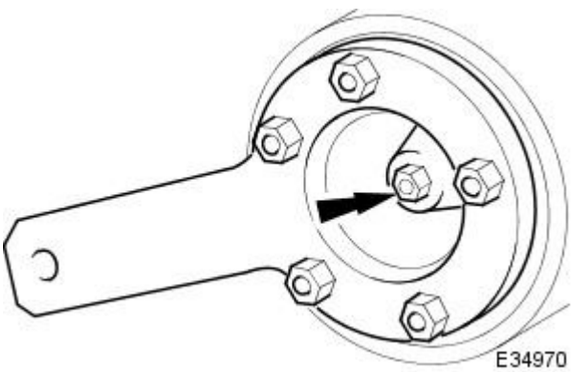

24. Remove nuts and withdraw special tool (204-195) from hub studs.

25. Install rear wheel. Refer to section 204-04.

26. Raise rear of vehicle, remove stands and lower vehicle. Refer to section 100-02.

27. Raise vehicle on four-post lift.

28. Route parking brake cable through equalizer (LH side cable only).

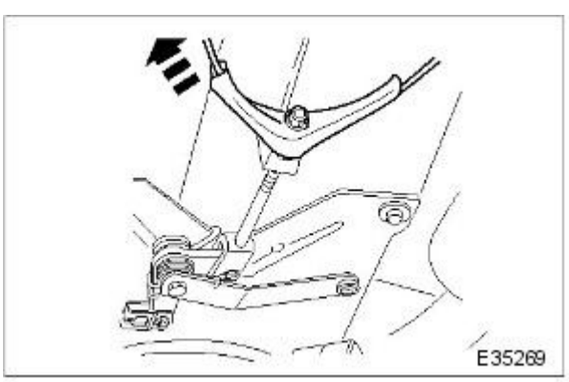

29. Install cable in connecting clip.

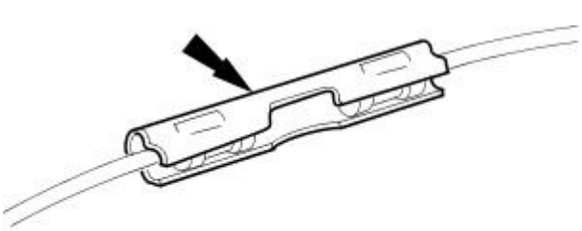

E34975

30. Adjust parking brake cable. Refer to 70.35.10.

31. Lower four-post lift.

32. Apply parking brake.

Published: 11-May-2011

Wheels and Tires -

Tire Pressures (Rough Road Markets)

Wheel Size		Tire Pressure
17, 18 or 19 inch	Front	2.20 bar (32 lbf/in²)
	Rear	2.30 bar (34 lbf/in²)
Temporary-use spare wheel		4.10 bar (60 lbf/in²)

Tire Pressures (Rest of the World)

Wheel Size		Vehicle speeds up to 160 km/h (100 miles/h)	Vehicle speeds over 160 km/h (100 miles/h)
17 or 18 inch	Front	1.80 bar (26 lbf/in²)	2.20 bar (32 lbf/in²)
	Rear	1.90 bar (28 lbf/in²)	2.30 bar (34 lbf/in²)
19 inch	front	2.20 bar (32 lbf/in²)	2.20 bar (32 lbf/in²)
	Rear	2.30 bar (34 lbf/in²)	2.30 bar (34 lbf/in²)
20 inch	front	2.20 bar (32 lbf/in²)	2.20 bar (32 lbf/in²)
	Rear	2.1 bar (30 lbf/in²)	2.1 bar (30 lbf/in²)
Temporary-use spare wheel		4.10 bar (60 lbf/in²)	

Torque Specifications

Description	Nm	lb/ft	lb/in
Wheel retaining nuts	102	75	-

Wheel Specification

Wheel Type	Wheel Size
Gemini	8 x 17
RK winter wheel	8.5 x 18
Aris (front)	8 x 18
Aris (rear)	9 x 18
Hydra (front)	8 x 18
Hydra (rear)	9 x 18
Atlas (front)	8 x 19
Atlas (rear)	9 x 19
Sepang (front)	9 x 20
Sepang (rear)	10 x 20
Detroit (front)	9 x 20
Detroit (rear)	10 x 20
Montreal (front)	9 x 20
Montreal (rear)	10 x 20

Tire Specification (Rest of the World)

Tire Manufacturer	Tire Size
Pirelli	245/50R17 99 Y
Continental	245/45R18 96 W
Continental	255/45R18 99 W
Pirelli	245/40R19 98 Y
Pirelli	255/40R19 100 Y
Pirelli	255/35R20 97 Y
Pirelli	285/30R20 99 Y

Tire Specification (Rough Road Markets)

Tire Manufacturer	Tire Size
Pirelli	245/50R17 99 Y
Pirelli	245/45R18 96 Y
Pirelli	255/45R18 99 Y
Pirelli	245/40R19 98 Y
Pirelli	255/40R19 100 Y

Published: 11-May-2011

Wheels and Tires - Wheels and Tires

Description and Operation

• WARNINGS:

Do not mix different types of tires on the same vehicle such as radial, bias or bias belted tires except in emergencies (temporary spare usage). Failure to follow these instructions may result in personal injury.

Never run the engine with one wheel off the ground, for example when changing a wheel. The wheel resting on the ground may cause the vehicle to move. Failure to follow these instructions may result in personal injury.

Aftermarket aerosol tire sealants are extremely flammable. Always question the customer to make sure these products have not been used. Failure to follow these instructions may result in personal injury.

Always wear safety goggles or a face shield when performing any work with wheel and tire assemblies. Failure to follow these instructions may result in personal injury.

Retighten the wheel retaining nuts at 800 km (500 miles) after any wheel change or anytime the wheel retaining nuts are loosened. Failure to follow these instructions may result in personal injury.

Failure to retighten the wheel retaining nuts at the specified mileage could cause the wheels to come become detached while the vehicle is in motion. Failure to follow these instructions may result in personal injury.

Each individual axle, wheel and tire has its own maximum weight or tire inflation rating. Do not overload or over-inflate beyond the capacity of the lowest rated components of the system. Failure to follow these instructions may result in personal injury.

When changing a wheel, make sure that the vehicle cannot move. Always apply the parking brake and select the transmission park position. Failure to follow these instructions may result in personal injury.

Use only wheels and wheel retaining nuts supplied by Jaguar. Aftermarket wheels or wheel retaining nuts may not fit or function correctly and could cause injury or damage. Failure to follow these instructions may result in personal injury.

Reduce air pressure as much as possible by pushing the valve core plunger in before removing the valve core. Failure to follow these instructions may result in personal injury.

CAUTION: Do not clean aluminium wheels with steel wool, abrasive type cleaners or detergents. Failure to follow these instructions may result in damage to the vehicle.

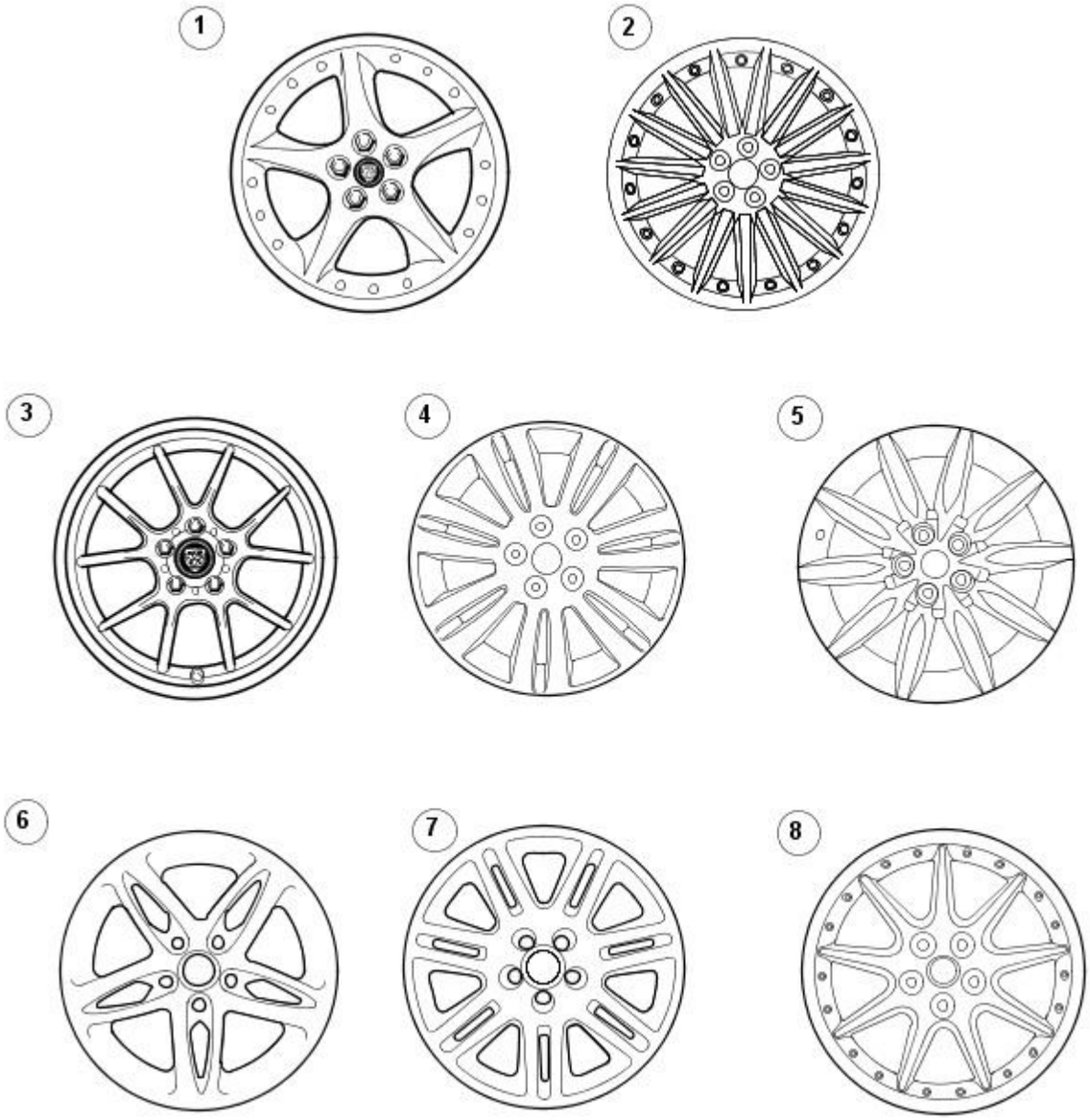

E48849

Item	Part Number	Description
1	-	Detroit
2	-	Sepang
3	-	RK winter wheel
4	-	Aris
5	-	Atlas
6	-	Gemini
7	-	Hydra
8	-	Montreal

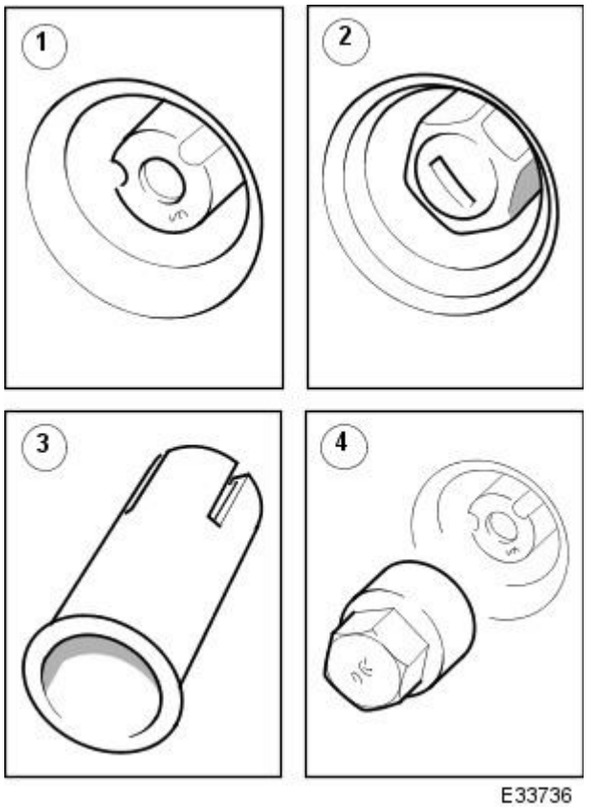

Item	Part Number	Description
1	-	Locking wheel retaining nut
2	-	Locking wheel retaining nut cover
3	-	Locking wheel retaining nut cover remover
4	-	Locking wheel retaining nut socket

Locking wheel retaining nuts

Locking wheel retaining nuts are fitted to all United Kingdom (UK) and Mexico vehicles with alloy wheels and are available as an accessory in certain other markets.

One locking wheel retaining nut is fitted to each road wheel and may only be removed by using the correctly coded socket.

Locking wheel retaining nuts are available in one length. The correct socket is supplied with the vehicle tool kit. Sets of sockets are available to Jaguar dealers.

Recommended Tires

The radial ply tires recommended by Jaguar meet the high speed performance of the vehicle. Only tires of identical specification may be fitted as replacements. Under no circumstances must cross-ply tires be fitted.

Tire Inflation Pressures

All recommended tires, including winter tires, must be inflated to the pressures shown in the Specifications sub-section. Inflation pressures must only be checked when the tires are cold.

Tire Replacement and Wheel-Interchanging

When the replacement of a tire is necessary, it is preferable to fit a complete set. If two replacement tires are fitted (to one axle), they must be of the same manufacturer and type as those on the other axle.

New tires must be balanced before fitting to the vehicle.

Winter (Snow) Tires

Winter tires must only be fitted in complete four-wheel sets of the same type and size. The maximum speed with winter tires fitted (without snow chains) is 210 km/h (131 mile/h) for H rated tires or 240 km/h (149 mile/h) for V rated tires.

When using snow chains, note that:

- Snow chains must only be fitted to the rear wheels.
- Only Jaguar snow chains must be used.
- Snow chains must not be used on roads which are clear of snow.
- The maximum speed with winter tires and snow chains fitted is 48 km/h (30 mile/h).
- Traction control (if equipped)) must be switched OFF when using snow chains.

Rotational Indicators

Some recommended winter tires may have an arrow moulded in the sidewall to indicate the correct direction of rotation. It is essential tires are fitted so that the arrow is pointing in the direction of rotation.

Some of the recommended tires for normal and winter use have an asymmetric tread pattern. These tires have inside and outside markers which should be fitted appropriately to the wheel.

Temporary-Use Spare Wheel

In certain markets, the spare wheel supplied with the vehicle is of the temporary-use type. It is narrower than the normal road wheel and takes up less room in the wheel luggage compartment.

When using this type of spare wheel note that:

- Maximum speed must not exceed 80 km/h (50 mile/h).
- The normal road wheel must be replaced as soon as possible.
- Only one temporary-use wheel may be fitted to the vehicle at any time.
- Traction control (where fitted) must be switched OFF.

Tread Wear Indicator

Tread wear indicators are molded into the bottom of the tread grooves across the width of the tire. The tire must be renewed when tread wear indicators become visible at the surface of the tread.

Note that tire tread depth and condition must comply with prevailing local legislation.

Published: 11-May-2011

Wheels and Tires - Wheels and Tires

Diagnosis and Testing

General notes

Factory installed wheels and tires are designed to operate satisfactory when inflated to the recommended inflation pressures; refer to the Specifications sub-section. The recommended pressures apply to vehicle loads up to and including full-rated load capacity.

Correct tire pressures and driving technique have an important influence on tire life. Heavy cornering, excessively rapid acceleration and unnecessary sharp braking increase tire wear.

Replacement tires should follow the recommended:

- size.
- speed rating.
- load range.
- radial construction type.

The use of any other size or type may seriously affect:

- safety.
- ride.
- handling.
- speedometer and odometer calibration.
- vehicle ground clearance.
- tire clearance between body and chassis.
- wheel bearing life.
- brake cooling.

Wheels need to be renewed when:

- impact damaged.
- heavily corroded.
- porous.
- wheel stud holes or seats become damaged.
- they have excessive radial or lateral runout.

Safety notes

• WARNINGS:

Do not mix different types of tires on the same vehicle. Handling may be seriously affected resulting in loss of control. Failure to follow these instructions may result in personal injury.

When using winter tires, observe the direction of the sidewall moulded indicators; correct tire rotational direction is critical. Failure to follow these instructions may result in personal injury.

A wheel and tire must always be correctly matched. Wider or narrower tires than recommended could cause danger through sudden deflation. Failure to follow these instructions may result in personal injury.

When using the temporary spare wheel, maximum speed must not exceed 80 km/h (50 mile/h). Drive with caution and replace with the specified wheel and tire assembly as soon as possible. Failure to follow these instructions may result in personal injury.

Traction control (if equipped) must not be engaged with a temporary spare wheel fitted. Failure to follow these instructions may result in personal injury.

When changing a wheel, make sure that the vehicle cannot move. Always apply the parking brake and select the transmission park position. Failure to follow these instructions may result in personal injury.

Never run the engine with one wheel off the ground, for example, when changing the wheel. The wheel resting on the ground may cause the vehicle to move. Failure to follow these instructions may result in personal injury.

Tighten the wheel retaining nuts to specification. Too tight may cause damage, too loose may allow the wheel to become detached. Failure to follow these instructions may result in personal injury.

Use only wheels and wheel retaining nuts supplied by Jaguar. Aftermarket wheels or wheel retaining nuts may not fit or function correctly and could cause injury or damage. Failure to follow these instructions may result in personal injury.

Inspection and Verification

1. **1.** Verify the customer's concern by driving the vehicle.
2. **2.** Visually inspect for obvious signs of damage:

Visual Inspection Chart

Mechanical
Incorrect tire pressure
Wheel imbalance
Tires worn beyond tread wear indicators
Cuts
Abrasions

Mechanical
Bulges (blister)
Ply separation
Embedded objects
Impact damage
Incorrect speed rating
Incorrect load rating
Incorrect rotational direction

3. **3.** If an obvious cause for an observed or reported concern is found, correct the cause (if possible) before proceeding to the next step.
4. **4.** If the concern is not visually evident, verify the symptom and refer to Symptom Chart.

Tire Wear Inspection

To maximize tire performance, inspect the tires for signs of incorrect inflation and uneven wear which may indicate a need for balancing, rotation or front suspension alignment. Tires should also be checked frequently for cuts, stone bruises, abrasions, blisters, and for objects that may have become embedded in the tread. More frequent inspections are recommended when rapid or extreme temperature changes occur or when road surfaces are rough or occasionally littered with debris.

Tire Wear Diagnosis

New tires should be installed if the wear indictors are exposed or if there is severe shoulder wear. Shoulder wear is usually caused by either excessive camber or excessive toe on radial tires.

Sometimes incorrect rear toe settings or damaged struts will cause severe 'cupping' or 'scalloped' tire wear on non-drive wheels.

Incorrect rear toe alignment will also cause other unusual wear patterns.

Road Test

A tire vibration diagnostic procedure always begins with a road test. The road test and customer interview (if available) will provide much of the information needed to find the source of a vibration.

During the road test, drive the vehicle on a road that is smooth and free of undulations. If vibration is apparent, note and record the following:

- The speed at which the vibration occurs.
- What type of vibration occurs in each speed range.
  - Mechanical or audible.
- How the vibration is affected by changes in the following:
  - Engine torque.
  - Vehicle speed.
  - Engine speed.
- Type of vibration-sensitivity: torque sensitive, vehicle speed sensitive or engine speed sensitive.

The following explanations help isolate the source of the vibration.

Torque Sensitive

This means that the condition may be improved or made worse by accelerating, decelerating, coasting, maintaining a steady vehicle speed or applying engine torque.

Vehicle Speed Sensitive

This means that the vibration always occurs at the same vehicle speed and is not affected by engine torque, engine speed or the transmission gear selected.

Engine Speed Sensitive

This means that the vibration occurs at varying vehicle speeds when a different transmission gear is selected. It may sometimes be isolated by increasing or decreasing engine speed with the transmission in NEUTRAL or by stall testing with the transmission in gear. If the condition is engine speed sensitive, the cause may probably not be related to the tires.

If the road test indicates that there is tire whine, but no shake or vibration, the noise originates with the contact between the tire and the road surface.

A thumping noise usually means that the tire has a flat or soft spot making a noise as they slap the roadway. Tire whine may be distinguished from axle noise. Tire whine remains the same over a range of speeds.

Symptom Chart

Symptom	Possible Sources	Action
Tires show excess wear on edge of treads	* Tires under-inflated.	* ADJUST pressures to specification.
	* Vehicle overloaded.	* CORRECT as required.
Tires show excess wear on edge of treads (having the correct tire pressures)	* Incorrect toe setting.	* ADJUST to specification. REFER to Section 204-00 Suspension System - General Information.
Tires show excess wear in center of tread	* Tires over-inflated.	* ADJUST pressure to specification.
Other excessive tire wear problems	* Incorrect tire pressure.	* ADJUST pressure to specification.
	* Incorrect tire and wheel usage.	* INSTALL correct tire and wheel combination.
	* Loose or leaking shock absorbers.	* Tighten or INSTALL new shock absorbers as necessary. REFER toSection 204-02 Rear Suspension or Section 204-01 Front Suspension.
	* Geometry out of alignment.	* CHECK and ADJUST. REFER to Section 204-00 Suspension System - General Information.
	* Loose, worn or damaged suspension components.	* INSPECT, REPAIR or INSTALL a new components as necessary.

	* Wheel and tire assembly out of balance.	* Balance wheel and tire assembly.
	* Excessive lateral or radial runout of wheel or tire.	* INSPECT, REPAIR or INSTALL a new wheel or tire as necessary. Refer to the procedure in this section.
Wheel mounting is difficult	* Incorrect application or mismatched components, including wheel studs and wheel retaining nuts. Corroded, worn or damaged components.	* CLEAN or INSTALL a new component.
Wobble or shimmy affecting wheel runout	* Damaged wheel (eventually damaging wheel bearings and causing uneven tire wear).	* INSPECT wheel rims for damage and runout. INSTALL a new wheel rim as necessary.
Excessive vibration, rough steering or severe tire wear	* Loose or incorrect attaching components.	* TIGHTEN or INSTALL new components.
Vehicle vibrations	* Tires / wheels mismatched.	* INSTALL correct tire and wheel combination.
	* Inflation pressure too high or low.	* ADJUST pressure to specification.
	* Out-of-balance wheel, tire, wheel hub or brake disc assembly.	* Determine the out-of-balance component and BALANCE or INSTALL a new component.
	* Damaged or distorted wheel from road impact hazard or incorrect handling.	* INSTALL a new wheel.
	* Excessive radial runout.	* INSTALL a new wheel or tire. CHECK for incorrect wheel and tire specifications.
	* Excessive lateral runout.	* INSTALL a new wheel or tire.
	* Incorrectly seated tire.	* INSTALL the tire correctly.
	* Defective wheel bearings.	* INSTALL a new wheel bearings. For additional information REFER toSection 204-01 Front Suspension,Section 206-00 Brake System - General Information or Section 204-02 Rear Suspension.
	* Brake disc imbalance.	* For additional information REFER to SectionSection 206-03 Front Disc Brakeor Section 206-04 Rear Disc Brake.
	* Water in tires.	* REMOVE the water.
	* Loose engine or transmission mounts.	* TIGHTEN or INSTALL a new mount.
	* Incorrect front axle crossmember alignment.	* ALIGN the front axle crossmember. REFER to Section 502-00 Uni-Body, Subframe and Mounting System.
	* Loose or worn driveline or suspension components.	* REPAIR or INSTALL new components.
	* Excessive driveshaft runout or imbalance.	* INSTALL a new driveshaft. REFER to Section 205-01 Driveshaft.
	* Worn or damaged flexible drive joint.	* INSTALL a new driveshaft. REFER to Section 205-01 Driveshaft.
Damaged wheel hub stud threads	* Sliding wheel across the wheel studs during installation. Loose wheel retaining nuts.	* INSTALL new wheel studs.
Broken wheel studs	* Loose or overtightened wheel retaining nuts.	* INSTAL new wheel studs.
Corrosion and contamination streaks from the wheel hub wheel stud holes	* Loose wheel retaining nuts.	* CHECK complete assembly. INSTALL new components as necessary. Follow the correct torque procedure.
Damaged wheel retaining nuts	* Loose wheel assembly.	* INSTALL new wheel retaining nuts. Follow the correct torque procedure.
	* Over-tightened wheel retaining nuts.	* INSTALL new wheel retaining nuts. Follow the correct torque procedure.
Frozen wheel retaining nuts	* Corrosion or galling.	CAUTION: Do not permit lubricant to contaminate wheel hub stud holes or wheel retaining nut seats. * If corrosion is light, wire brush away corrosion. If corrosion is excessive INSTALL new wheel studs and wheel retaining nuts. LUBRICATE the first three threads of wheel studs with a graphite based lubricant.

Wheels and Tires - Wheel and Tire

Removal and Installation

Removal

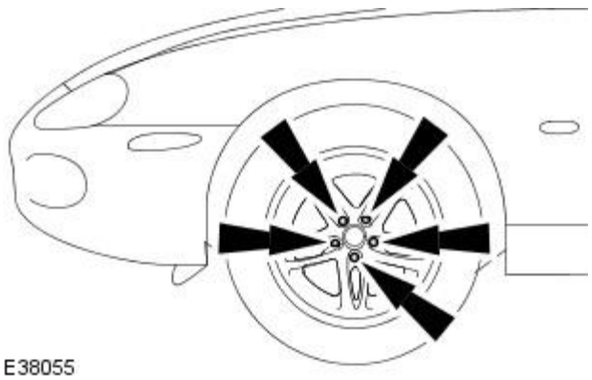

1. CAUTION: Do not use heat to loosen a seized wheel retaining nut. Excessive heat may cause damage to the wheel and wheel bearings.

Loosen the wheel retaining nuts.

2. Raise and support the vehicle.
For additional information, refer to Section 100-02 Jacking and Lifting.

3. Remove the wheel and tire.

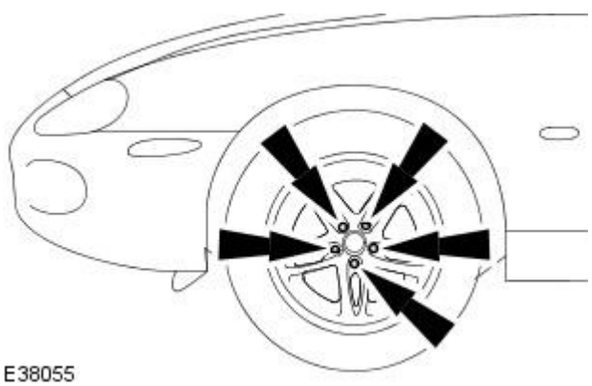

Installation

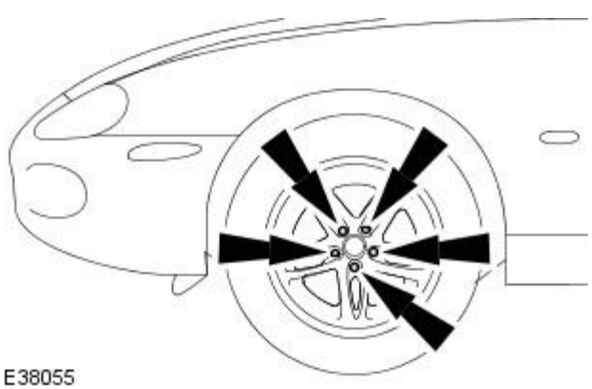

1. WARNINGS:

Make sure there is no contamination of the wheel, wheel hub or brake disc contact surfaces. Installation without metal to metal contact at the mounting surfaces may cause the wheel retaining nuts to loosen and allow the wheel to detach with the vehicle in motion. Failure to follow these may result in personal injury.

Apply a small amount of grease to the wheel hub and wheel mating surfaces before installation. Make sure the grease does not come into contact with the vehicles braking components. Failure to follow these instructions may result in personal injury.

To install, reverse the removal procedure.

- Tighten to 102 Nm.

Published: 11-May-2011

Vehicle Dynamic Suspension - Vehicle Dynamic Suspension

Description and Operation

Damping System

Description

Movement of each road spring is independently damped by a telescopic, hydraulically-controlled shock absorber. Each shock absorber is installed coaxially within the road spring. Front springs are located between spring seats on the shock absorber body and rod, rear springs are located between seats on the shock absorber and the lower wishbone.

Front Shock Absorber Arrangement

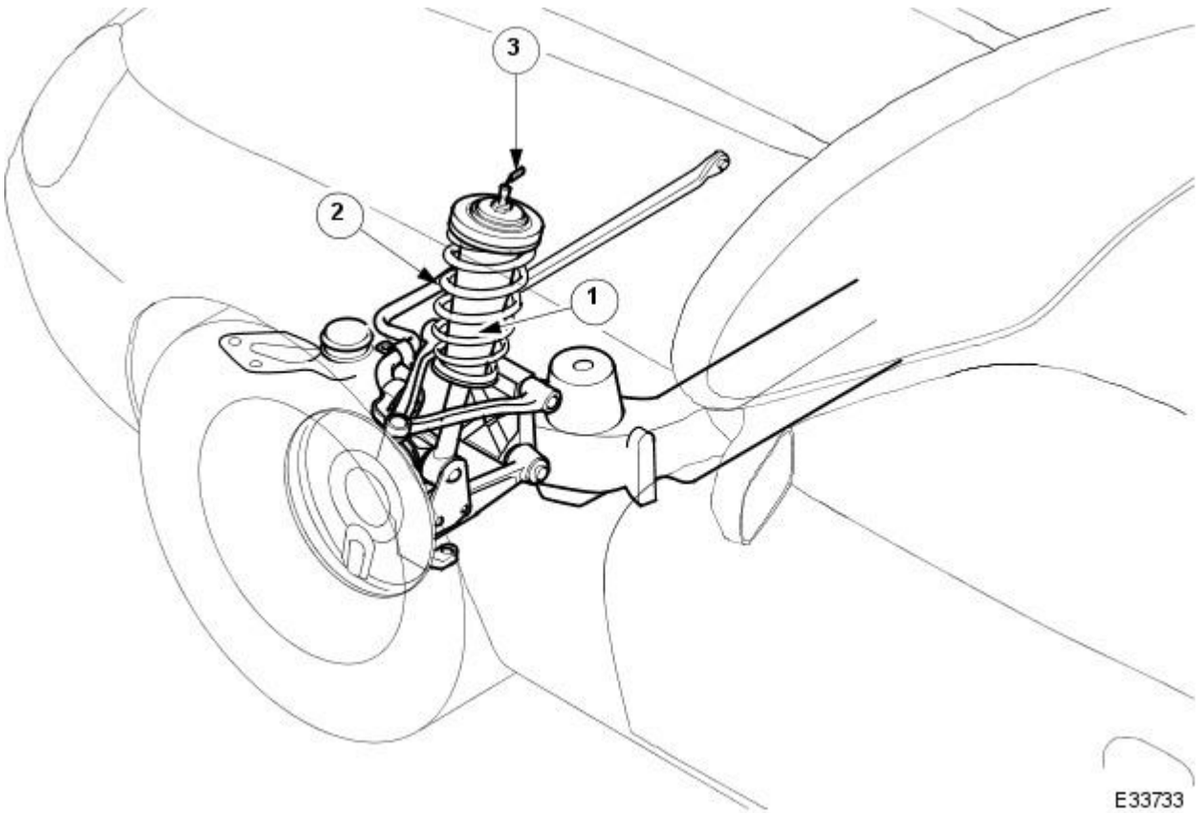

Item	Description
1	Shock Absorber
2	Road Spring
3	Adaptive Damper Harness Connector

Rear Shock Absorber Arrangement

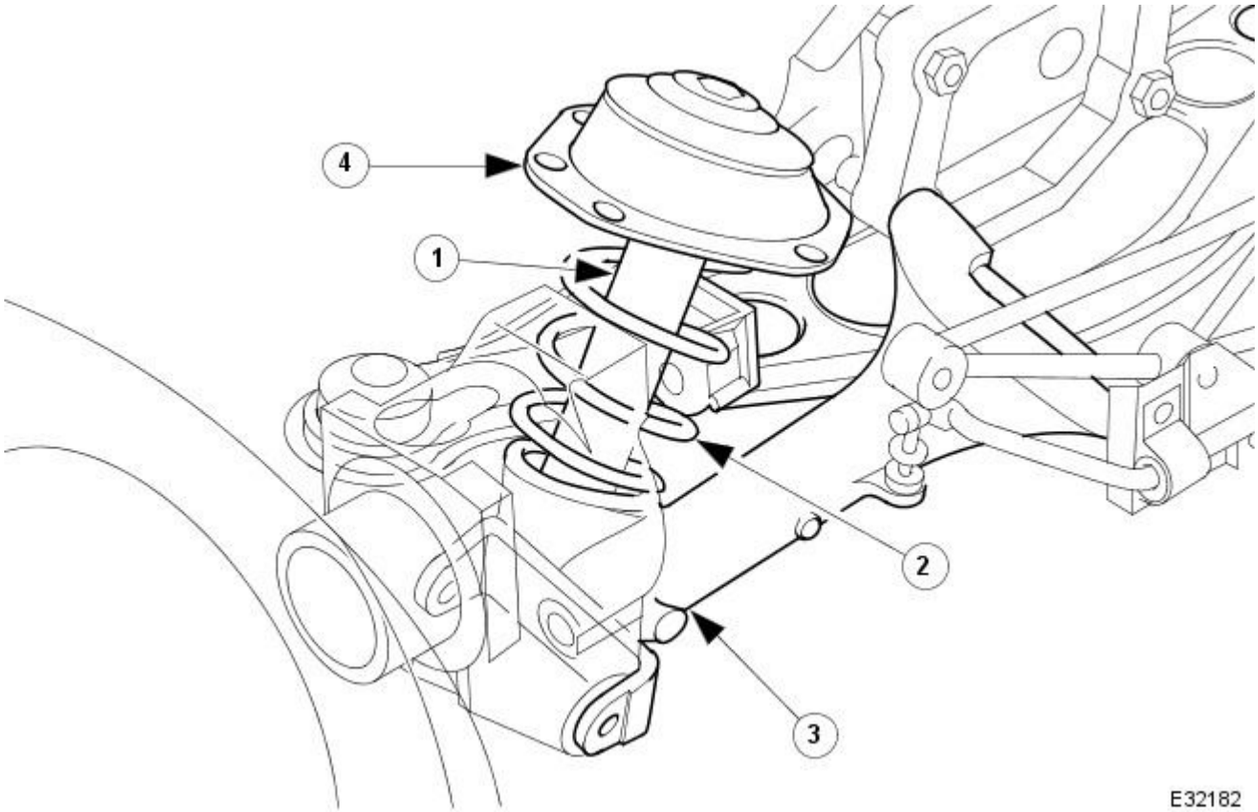

Item	Description
1	Shock Absorber
2	Road Spring
3	Lower Wishbone
4	Spring Upper seat

Operation

As a shock absorber rod rises and falls in unison with road spring movement, that movement is damped by controlling the flow of fluid from one end of a chamber to the other within each shock absorber. Any increase in the restriction of fluid flow within a shock absorber results in a corresponding increase in damping action and a firmer ride.

Adaptive Damping System

Description

The Adaptive Damping System available as an option, matches damping effect with vehicle driving forces, to provide optimum ride and handling performance.

The system which is completely automatic and requires no drive input, comprises the following components:

- Four adaptive damping units installed in the normal shock absorber positions. These are identified by a harness connector incorporated in the top of each unit.
- An adaptive damping control module (ADCM) installed in the trunk adjacent to the battery.
- Two vertical movement sensors (accelerometers), one installed on the bulkhead below the air conditioning unit, the other in the trunk below the fuel tank.
- A lateral movement sensor (accelerometer) installed within the RH side false bulkhead.

Operation

The four adaptive damping units are simultaneously switched to either firm or soft setting to suit circumstances. When the vehicle is stationary, the system adopts the firm setting to minimize vehicle pitch during initial acceleration. From 8km/h (5mph) upwards, the system reverts to the soft setting until otherwise switched by the ADCM.

On detecting cornering forces, the lateral sensor transits signals to the ADCM, which in turn switches the damping units to the firm setting, reducing vehicle roll-rate and improving wheel control.

On detection of a bump or depression in the road, the vertical sensors transmit signals to the ADCM, which in turn switches the damping units to the firm setting to minimize vehicle body movement.

Under braking conditions, the ACDM, on receipt of a signal, commences calculation of vehicle deceleration. When deceleration exceeds a pre-determined threshold, the ADCM switches the damping units to the firm setting, reducing vehicle pitch rate and improving wheel control.

Following completion of a cornering manoeuvre, negotiation of road surface undulations, or heavy braking, that has necessitated switching to the firm setting, the ADCM always returns the damping units to the soft setting.

In the event of failure of the Adaptive Damping System, the damping units automatically revert to the Firm setting, ensuring that the vehicle remains safe to drive under all circumstances. The driver will be alerted to such a failure by illumination of a "SUSPENSION FAULT" warning on the fascia message center and the amber warning light in the instrument cluster.

Adaptive Damping Components

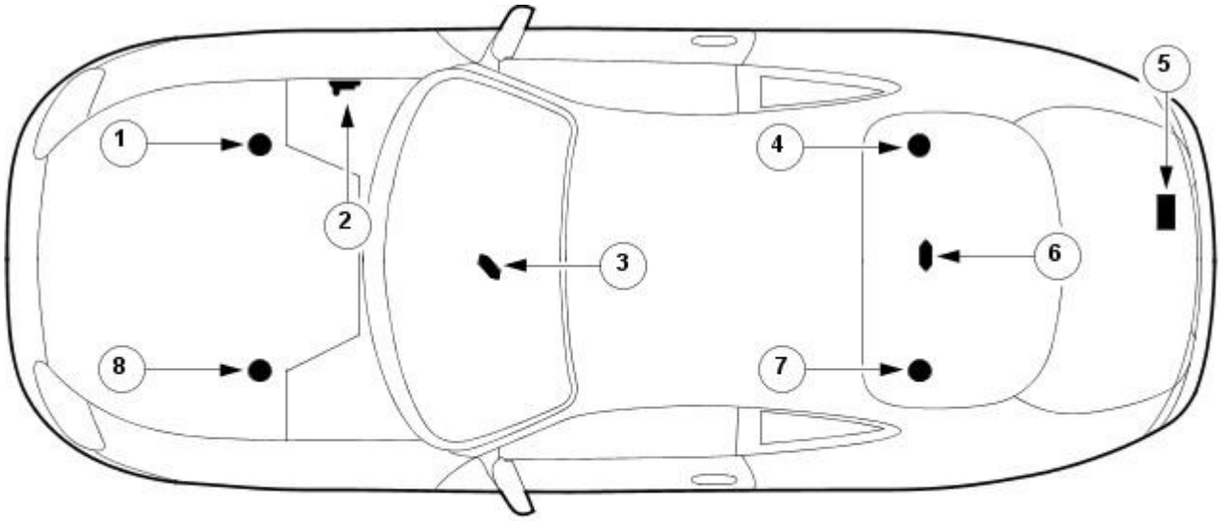

E33730

Item	Description
1	Adaptive Damper Unit Front-Right Hand
2	Accelerometer-Lateral
3	Accelerometer Vertical-Front
4	Adaptive Damper Unit Rear-Right Hand
5	Electronic Control Module (ADCM)
6	Accelerometer Vertical-Rear
7	Adaptive Damper Unit Rear-Left Hand
8	Adaptive Damper Unit Front-Left Hand

ADCM / Component Relationship

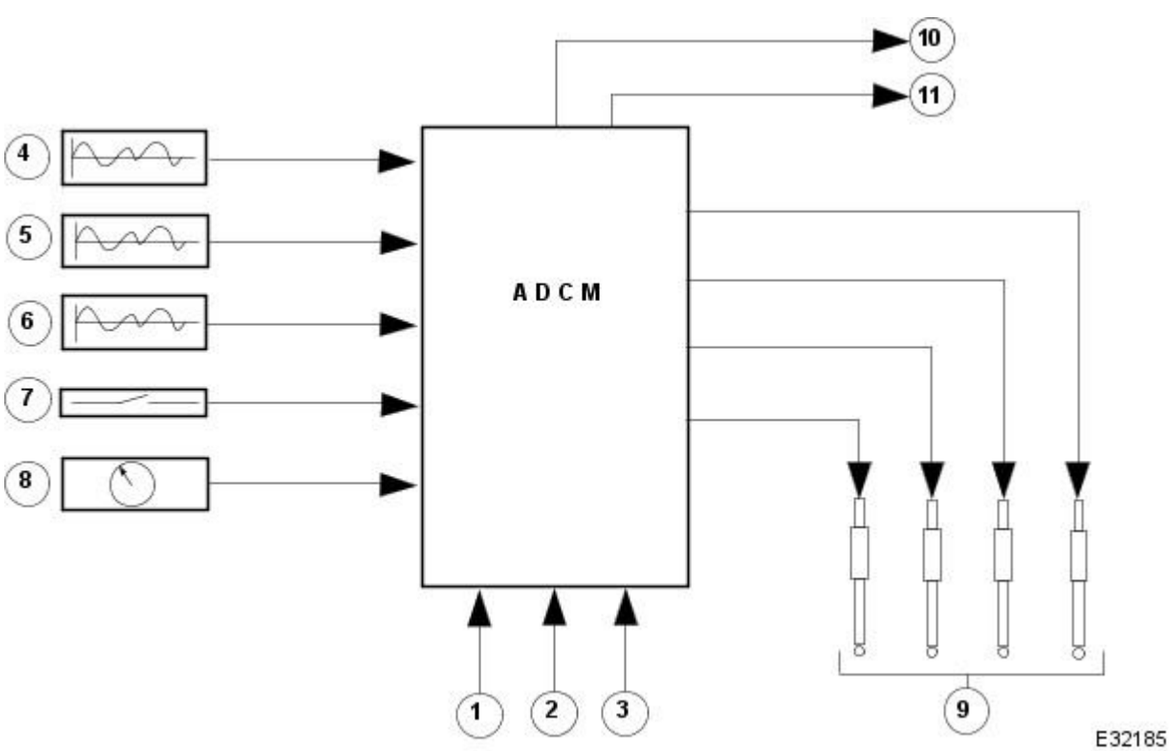

E32185

Item	Description
1	Power
2	Ignition Supply
3	Ground
4	Vertical Accelerometer - Front
5	Vertical Accelerometer - Rear
6	Lateral Accelerometer
7	Brake Operation Signal
8	Vehicle Speed Signal
9	Output to Fascia Message Centre
10	Damper Control Signals

Three accelerometers sense vehicle body movement and generate an analogue voltage (+5V max.) output, which is proportional to the vehicle body movement. These voltages are supplied to the Adaptive Damping Control Module (ADCM).

At 0g. (no movement of the body) each vertical accelerometer outputs approximately 2.5V steady voltage. The lateral accelerometer outputs

approximately 1.5V. The voltage output due to body movement is proportional to acceleration in the acceleration axis, up to approximately 4.5V and down to approximately 0.5V.

The ADCM is hardwired to the Instrument Cluster. Should a fault occur, the ADCM grounds the System Error line which switches on the amber warning lamp and displays the message SUSPENSION FAILURE on the message centre.

Connector Pin Identity Chart for BT069

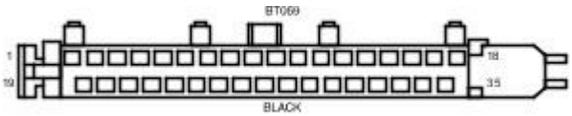

E33731

Pin Number	Circuit	Circuit Function
1		System Error Output, to Instrument Cluster
2		Traction Over-ride, from ABS/TCCM
3		Ground
10		K-Line to Diagnostic Socket
11		Ignition Supply +12V
13		Control Signal (+ve) Output to Left Hand Rear Damper
14		Control Signal (+ve) Output to Right Hand Front Damper
15		Control Signal (+ve) Output to Right Hand Rear Damper
18		Ground
20		Lateral Accelerometer Input
21		Front Vertical Accelerometer Input
22		Rear Vertical Accelerometer Input
24		Road Speed Input From Instrument Cluster
25		Power Output +5V to Supply Accelerometers
26		Brake Pedal Input
27		Battery Supply +12V
28		L-Line to Diagnostic Socket
30		Control Signal (+ve) Output to Left Hand Front Damper
31		Control Signal (-ve) Output to Left Hand Front Damper
32		Control Signal (-ve) Output to Left Hand Rear Damper
33		Control Signal (-ve) Output to Right Hand Front Damper
34		Control Signal (-ve) Output to Right Hand Rear Damper

Vehicle Dynamic Suspension - Vehicle Dynamic Suspension

Diagnosis and Testing

Refer to PDU User Guide

Refer to the PDU User Guide for details of diagnosing and testing the Adaptive Damping System. The PDU interrogates the ADCM directly via the K and L lines to the diagnostic socket.

The PDU will give an indication of the integrity of each electronic and electrical component. It will indicate, for example, that the accelerometers are not broken, but not that they functioning correctly when the vehicle is in motion. However, it is exceptional for an accelerometer to function incorrectly in its dynamic mode if it is proved to be functioning when static.

Basic Checks

Before changing any component, refer to the circuit diagrams of the manual and check the continuity of relevant harness circuits; in some instances, the PDU will not differentiate between a faulty component and a damaged connection or wiring.

Check the System Error line from the ADCM to the Instrument Cluster - Fascia Harness pin FC025/006. Check the Road Speed Output from the Instrument Cluster to the ADCM - Fascia Harness pin FC026/007.

Check any relevant connections to confirm that the connection is electrically sound and that a terminal pin has not been pushed back into the connector shell, ie. not making a connection to its mating pin / socket.

Check the following fuses in the luggage compartment fusebox: Fuse No. 2 (20A) and Fuse No. 4 (5A).

Vehicle Dynamic Suspension - Adaptive Damping Module

Removal and Installation

Removal

1. Remove trunk floor carpet.
2. Remove battery cover and disconnect ground cable from battery terminal. Refer to 86.15.19.
3. Remove adaptive damping control module nuts.

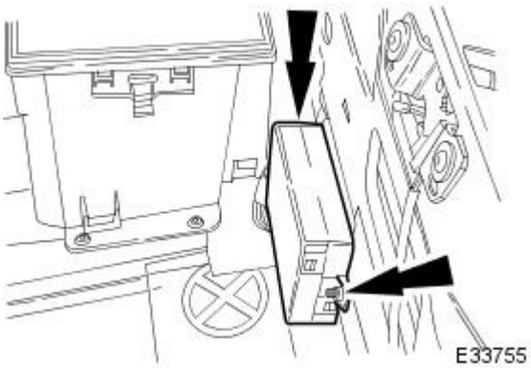

E33756

4. Position control module for access and disconnect harness connector.
5. Remove control module from vehicle.

Installation

1. Position control module in trunk and connect harness connector.
2. Finally position control module and install nuts.
3. Connect ground cable to battery terminal and install battery cover. Refer to 86.15.15.
4. Install trunk floor carpet.

Published: 11-May-2011

Driveline System - General Information - Driveline System

Description and Operation

Details of the Driveline System can be found in sections 205-01 and 205-02.

Published: 11-May-2011

Driveline System - General Information - Driveline System

Diagnosis and Testing

Inspection and Verification

Certain driveline trouble symptoms are also common to the engine, transmission, wheel bearings, tires, and other parts of the vehicle. For this reason, make sure that the cause of the trouble is in the driveline before adjusting, repairing, or installing any new components. For additional information, refer to section 100-04.

1. **1.** Verify the customer concern by carrying out a road test of the vehicle.
2. **2.** Visually inspect for obvious signs of mechanical damage.
3. **3.** If an obvious cause for an observed or reported concern is found, correct the cause (if possible) before proceeding to the next step.
4. **4.** If the concern is not visually evident, verify the symptom and refer to the Symptom Chart.

Rear Drive Axle Noise

Gear Howl and Whine

Howling or whining of the ring gear and pinion is due to an incorrect gear pattern, gear damage or incorrect bearing preload.

Bearing Whine

Bearing whine is a high-pitched sound similar to a whistle. It is usually caused by worn/damaged pinion bearings, which are operating at driveshaft speed. Bearing noise occurs at all driving speeds. This distinguishes it from gear whine which is speed dependent.

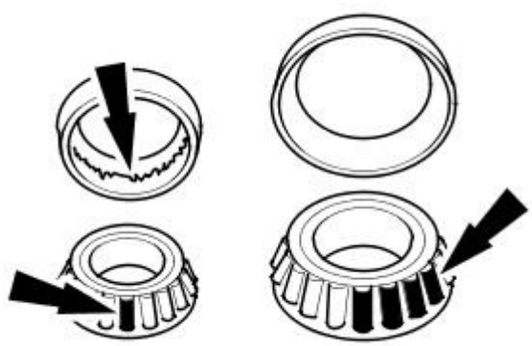

ELE0012864

As noted, pinion bearings make a high-pitched, whistling noise, usually at all speeds. If however there is only one pinion bearing that is worn/damaged, the noise may vary in different driving phases.

A wheel bearing noise can be mistaken for a pinion bearing noise.

Chuckle

Chuckle that occurs on the coast driving phase is usually caused by excessive clearance between the differential gear hub and the differential case bore.

Damage to a gear tooth on the coast side can cause a noise identical to a chuckle. A very small tooth nick or ridge on the edge of a tooth can cause the noise.

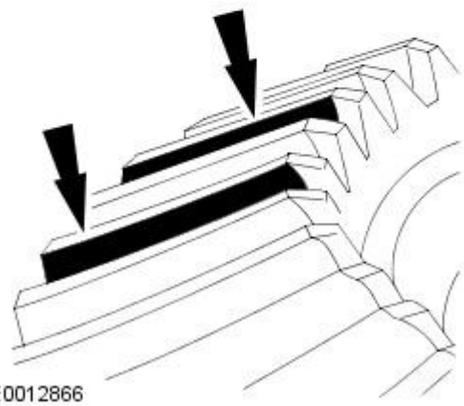

Knock

Knock, which can occur on all driving phases, has several causes including damaged teeth or gearset.

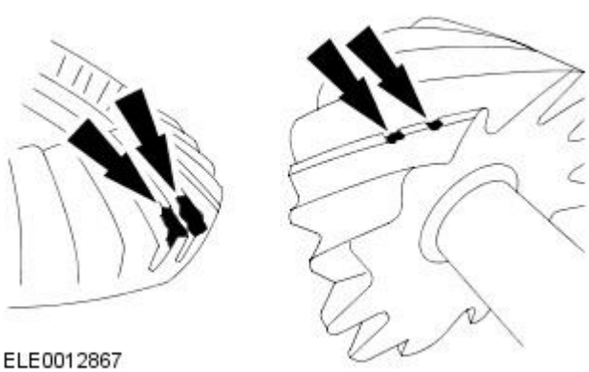

A gear tooth damaged on the drive side is a common cause of the knock.

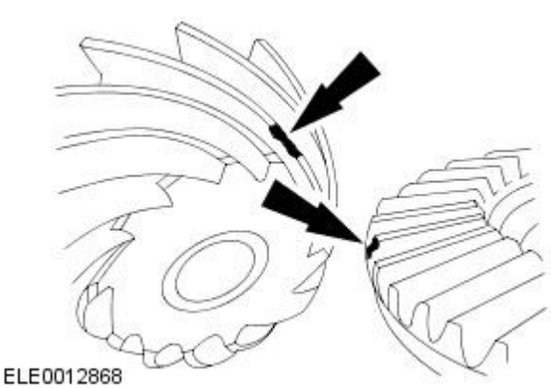

Clunk

Clunk is a metallic noise heard when the automatic transmission is engaged in REVERSE or DRIVE. The noise may also occur when the throttle is applied or released. Clunk is caused by backlash in the driveline or loose suspension components and is felt or heard in the vicinity of the Rear drive axle.

Bearing Rumble

Bearing rumble sounds like marbles being tumbled. This condition is usually caused by a worn/damaged wheel bearing. The lower pitch is because the wheel bearing turns at only about one-third of the driveshaft speed. Wheel bearing noise also may be high-pitched, similar to gear noise, but will be evident in all four driving modes.

Symptom Chart

Symptom Chart

Symptom	Possible Sources	Action
Noise is at constant tone over a narrow vehicle speed range. Usually heard on light drive and coast conditions	* Rear drive axle.	* For additional information, GO to Pinpoint Test A. .
Noise is the same on drive or coast	* Road. * Wheel bearing.	* Normal conditions. * CHECK and INSTALL a new wheel bearing as necessary. For additional information, REFER to Section 204-02 Rear Suspension.
	* Worn or damaged driveshaft joint.	* INSTALL new components as necessary.
	* Driveshaft center bearing.	* INSTALL new components as necessary.
Noise is produced with the vehicle standing and driving	* Engine	* For additional information, REFER to Section 303-00 Engine System - General Information.
	* Transmission	* For additional information, REFER to Section 307-01 Automatic Transmission/Transaxle.
Noise is more pronounced while turning	* Differential side gears and pinion gears.	* For additional information, REFER to Section 205-02 Rear Drive Axle/Differential.
Loud Clunk in the Driveline When Shifting from Reverse to Forward	* Engine idle speed set too high. * Engine mount.	* Check and adjust as necessary. For additional information, REFER to Section 303-14 Electronic Engine Controls. * INSPECT and INSTALL new engine mounts as necessary.
	* Transmission Mount.	* INSPECT and INSTALL new transmission mounts as necessary.
	* Transmission.	* For additional information, REFER to Section 307-01 Automatic Transmission/Transaxle.
	* Suspension components.	* INSPECT and INSTALL new suspension components as necessary.
	* Backlash in the driveline.	* INSTALL new components as necessary.
Clicking, Popping, or Grinding Noises	* Inadequate or contaminated lubrication in the rear drive halfshaft constant velocity (CV) joint. * Another component contacting the rear drive halfshaft. * Wheel bearings, brakes or suspension components.	* INSPECT, CLEAN and LUBRICATE with new grease as necessary. * INSPECT and REPAIR as necessary. * INSPECT and INSTALL new components as necessary.
Vibration at Highway Speeds	* Out-of-balance wheels or tires.	* INSTALL new tire(s) as necessary. For additional information, REFER to Section 204-04 Wheels and Tires.
	* Driveline out of balance/misalignment.	* For additional information, refer to the Jaguar approved diagnostic system.
Shudder, Vibration During Acceleration	* Powertrain/driveline misalignment.	* CHECK for misalignment. INSTALL new components as necessary.
	* High constant velocity (CV) joint operating angles caused by incorrect ride height.	* CHECK the ride height and VERIFY the correct spring rate. INSTALL new components as necessary.
Lubricant Leak	* Vent.	* INSTALL new components as necessary.
	* Damaged seal.	* INSTALL new components as necessary.
	* Rear drive axle filler plug.	* INSTALL new components as necessary.
	* Rear drive axle rear cover joint.	* INSTALL new components as necessary.
Gear howl or whine when accelerating around a corner in forward or reverse gears.	* Axle assembly	* INSTALL a new axle assembly. REFER to Section 205-02 Rear Drive Axle/Differential.

PINPOINT TEST A : EXCESSIVE DRIVELINE NOISE	
TEST CONDITIONS	**DETAILS/RESULTS/ACTIONS**
A1: CHECK NOISE FROM VEHICLE ON ROAD TEST	
	1 Road test vehicle to determine load and speed conditions when noise occurs.
	2 Assess the noise with different gears selected.
	Does the noise occur at the same vehicle speed? **Yes** INSTALL a new axle assembly. TEST the system for normal operation. **No** REFER to Section 303-00 Engine System - General Information and Section 307-01 Automatic Transmission/Transaxle.

Driveshaft -

Torque Specifications

Description	Nm	lb-ft	lb-in
Driveshaft to transmission retaining nuts and bolts	88	65	-
Driveshaft to rear drive axle retaining nuts and bolts	60	44	-
Driveshaft centre bearing retaining bolts	25	18	-

Driveshaft - Driveshaft

Description and Operation

Driveshaft

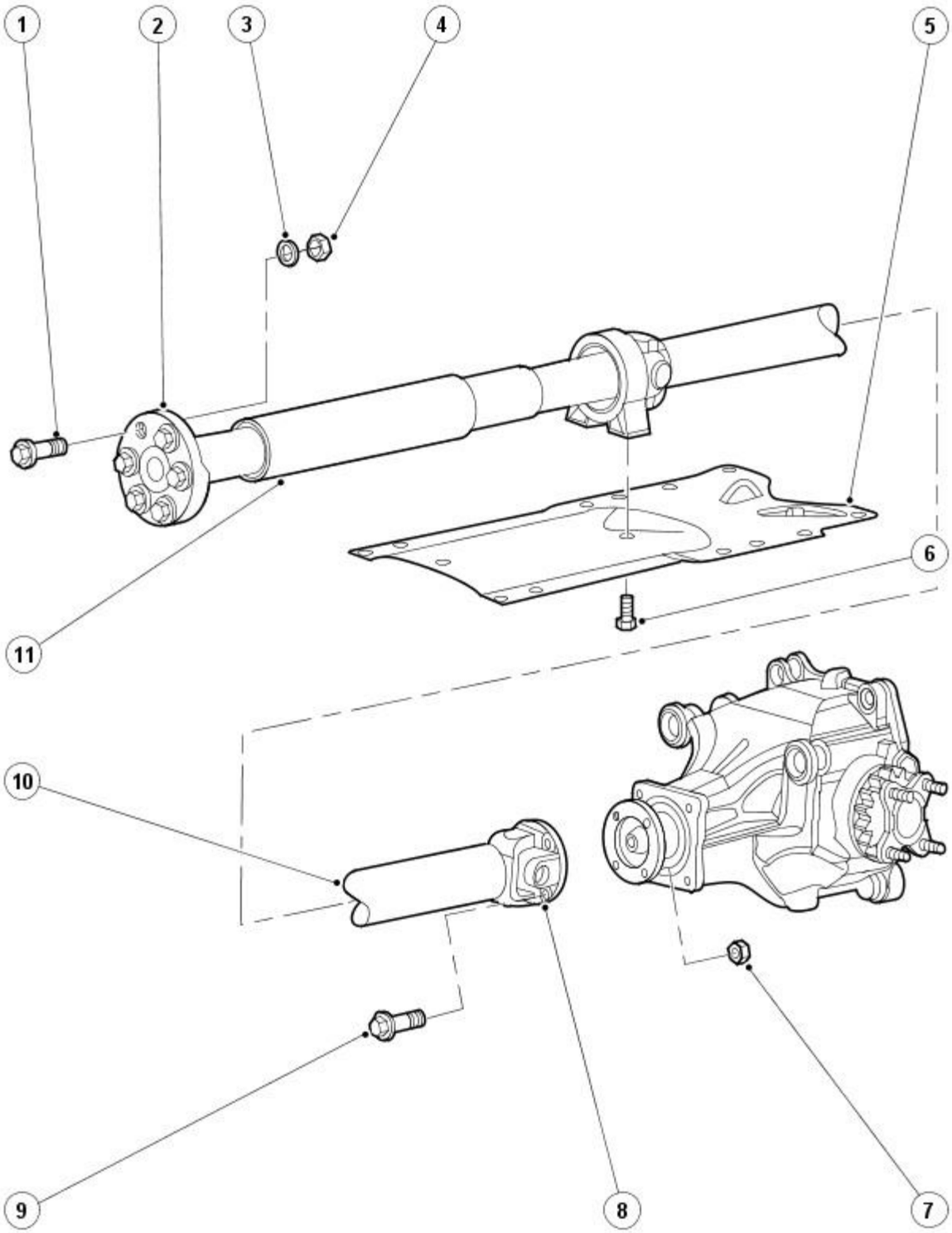

E37936

Item	Description
1	Transmission flexible joint retaining bolt
2	Transmission flexible joint
3	Transmission flexible joint washer
4	Transmission flexible joint retaining nut
5	Parking brake linkage lever and center bearing mounting plate
6	Center bearing retaining bolt
7	Driveshaft to rear drive axle retaining nut
8	Driveshaft universal joint
9	Driveshaft to rear drive axle retaining bolt
10	Rear driveshaft tube
11	Collapsible front driveshaft tube

CAUTION: To preserve 'drive line' refinement, individual parts, other than fixings, MUST NOT be renewed. In the event of any balance

or driveshaft component related concern, the complete assembly must be renewed. Under no circumstances may the flexible coupling be removed from the driveshaft (or its fixings be loosened). Do not drop or subject the driveshaft to damage.

• NOTE: All driveshaft assemblies are balanced. If undercoating the vehicle, protect the driveshaft, universal joints and the rear drive axle shafts to prevent over-spray of the undercoating material.

The driveshaft consists of the following:

- a two piece welded steel tube with a splined center slip joint.
- two universal joints.
- a center bearing.
- a flexible joint.

Universal Joints

The universal joints are:

- a lubed-for-life design and require no lubrication in service.

Published: 11-May-2011

Driveshaft - Driveshaft

Diagnosis and Testing

For additional information, refer to Section 205-00 Driveline System - General Information.

Driveshaft - Driveshaft

Removal and Installation

Removal

1. Remove the front muffler.
   For additional information, refer to Section 309-00 Exhaust System.
2. Remove the parking brake cable adjustment nut.

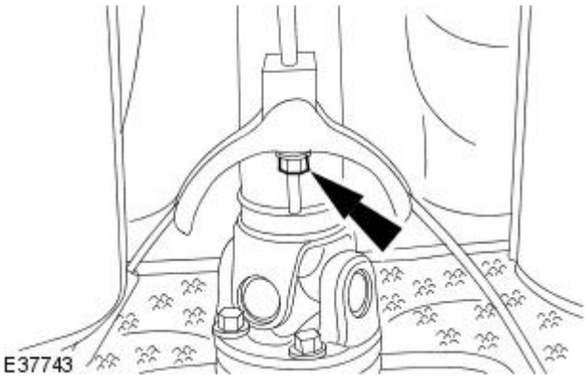

3. Remove the parking brake cable retaining bracket.

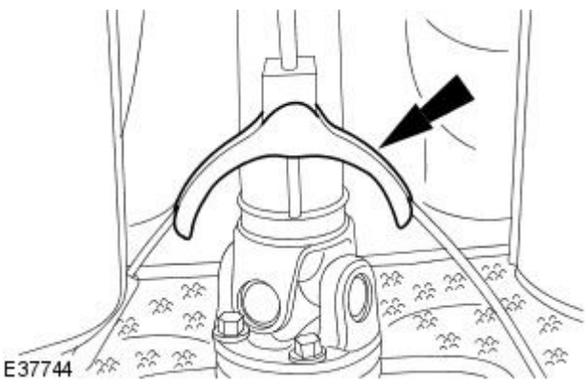

4. Detach the parking brake front cable.

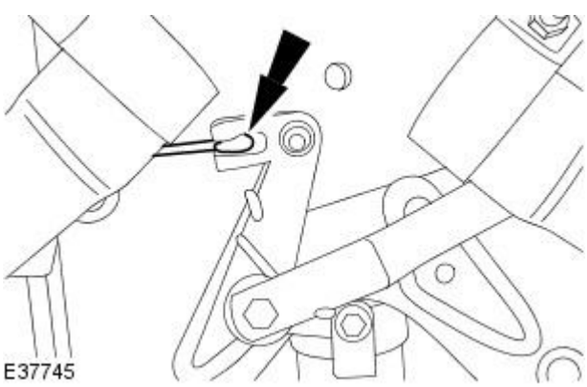

5. Detach the driveshaft center bearing.

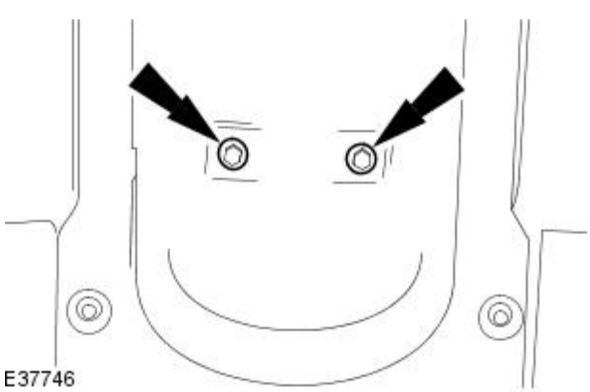

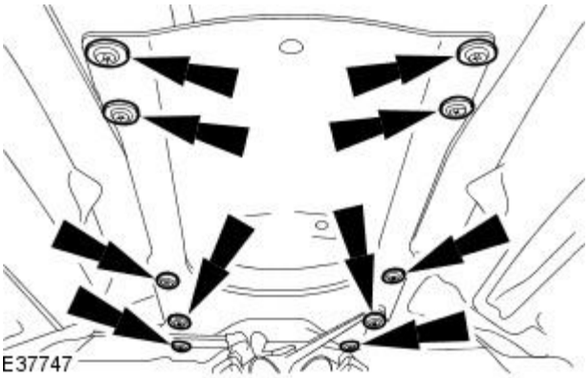

6. Remove the parking brake linkage lever and center bearing mounting plate.

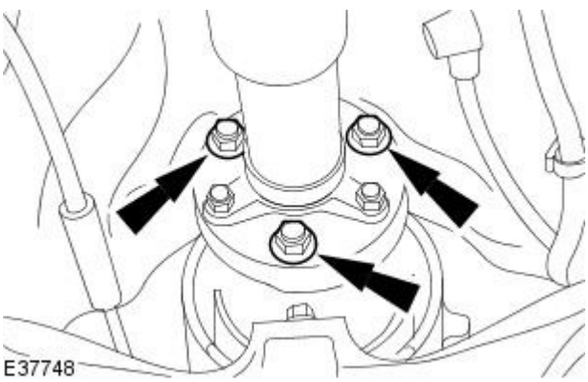

7. CAUTION: Under no circumstances must the flexible coupling (or its fixings) be loosened or removed from the driveshaft. Failure to follow this instruction may result in damage to the vehicle.

Detach the driveshaft from the transmission flange.

- Mark the position of the driveshaft in relation to the transmission flange.
- Mark the position of each nut and bolt in relation to the transmission flexible joint.

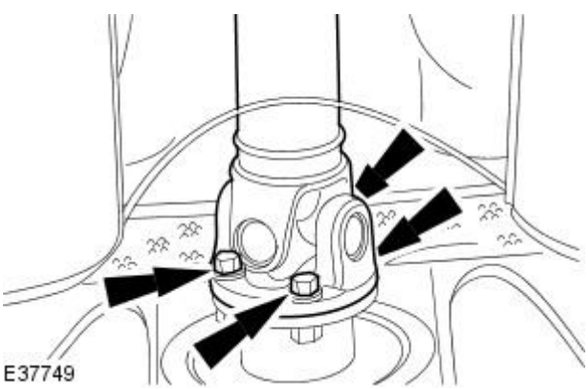

8. Remove the driveshaft.

Installation

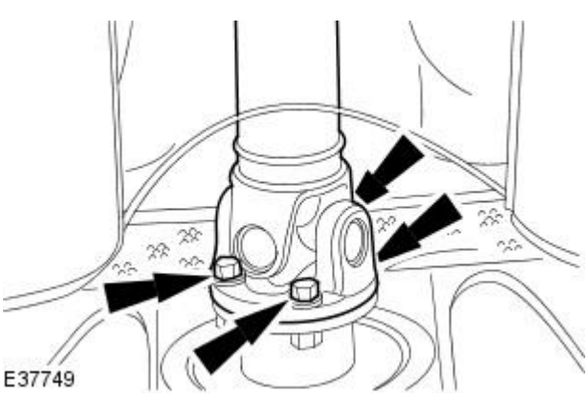

1. To install, reverse the removal procedure.

- Tighten to 60 Nm.

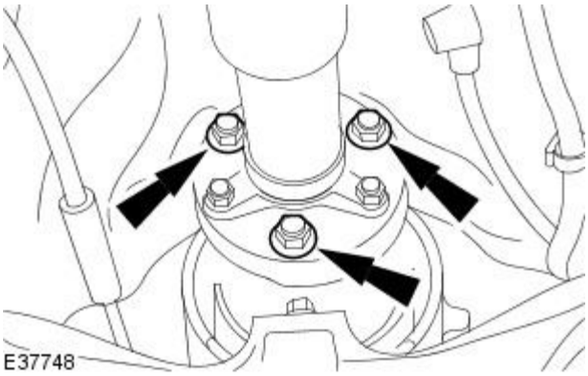

2. Tighten to 88 Nm.

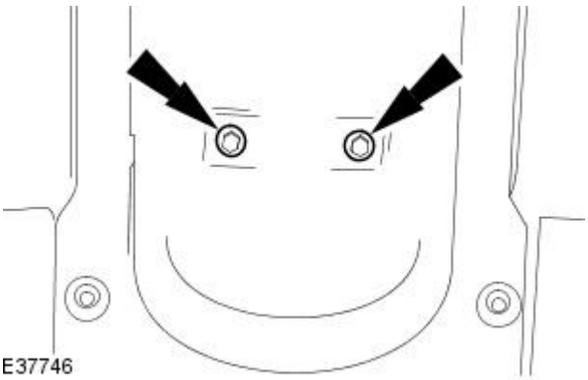

3. Tighten to 25 Nm.

Rear Drive Axle / Differential -

Lubricants, Fluids, Sealants and Adhesives

Unit	Specification
Final Drive	Shell Spirax Super TS 90
Hub spline to Axle shaft	Loctite 270 Studlock or equivalent

Capacities

Unit	Liters
Final Drive	1,80

Torques

Component	Nm
Bolt - Final drive nose plate	39 - 51
Bolt - 'A' frame to final drive	90 - 110
Nut 'A' frame to rear mounting bracket	85 - 115
Nut - Axle shaft to final drive flange	81 - 99
Nut - Axle shaft to hub	304 - 336
Nut - Damper lower fixing	80 - 100
Bolt M12 - Jurid flexible coupling to transmission	75 - 88
Bolt M10 - Driveshaft to final drive unit flange	51 - 69
Nut - Lower fulcrum	90 - 110
Nut - Pendulum to final drive	160 - 200
Nut - Stabilizer to wishbone	30 - 40
Nut - Tie rod to final drive	85 - 105
Nut - Tie rod to wide mounting bracket	85 - 115
Nut - Wishbone pivot	80 - 100
Nut - Wishbone tie to final drive	85 - 105
Nut 'A' frame to wide mounting bracket	85 - 105

Published: 11-May-2011

Rear Drive Axle / Differential - Rear Drive Axle and Differential

Description and Operation

Final Drive Mounting

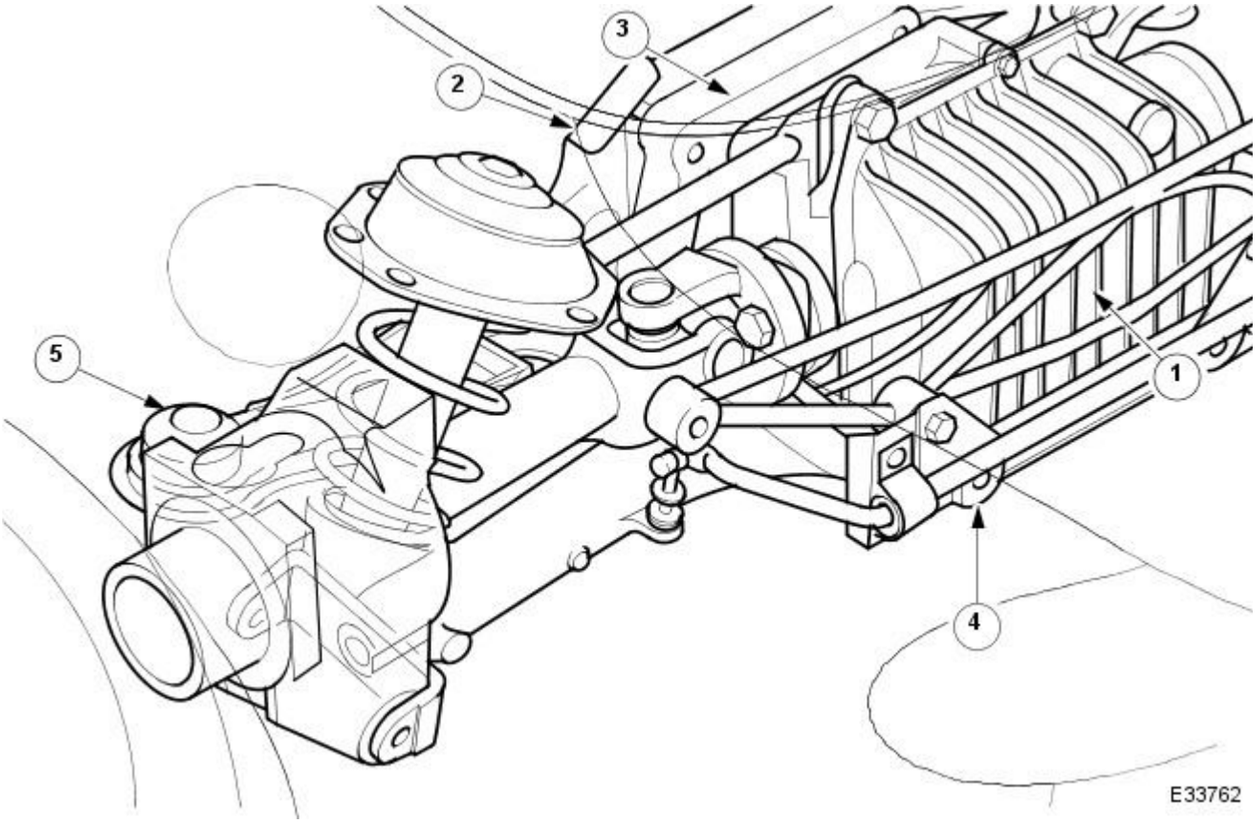

Parts List

Item	Part Number	Description
1	—	Final Drive Unit
2	—	Wide Mounting Bracket
3	—	Pendulum Assembly
4	—	Wishbone Tie Assembly
5	—	'A' Frame

The type 14 HU final drive assembly is a hypoid unit with the pinion arranged on the cross-car cenerline. It utilizes a cassette type pinion oil seal and sealed output shaft bearings.

The assembly is filled for life using a thermally stable lubricant.

The differential unit is mounted between the wide mounting bracket, pendulum assembly and the wishbone tie assembly. Two tie rods are fitted between top rear of the final drive casing and the front of the wide mounting bracket.

Rear Drive Axle / Differential - Differential Output Shaft End Float Check

General Procedures

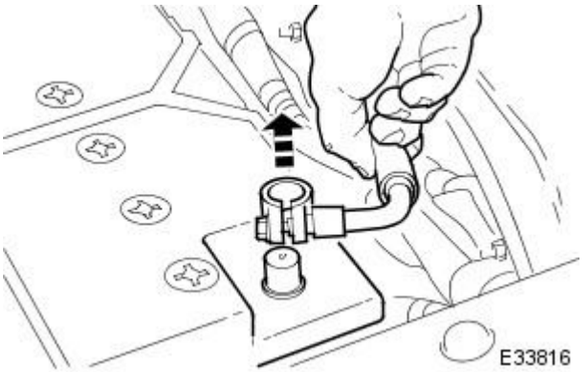

1. Disconnect the battery ground lead

2. Raise the vehicle for access

3. Mount a dial test indicator (DTI) to the differential housing with the probe resting on the axle shaft flange (the DTI probe must be parallel to the output shaft center line and NOT the axle shaft)

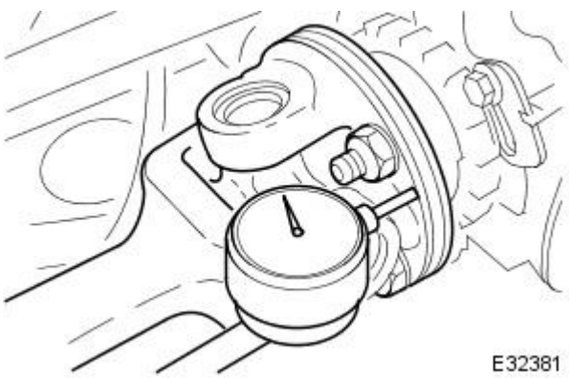

4. Check the end float

- Push the wheel / shaft assembly INWARDS
- Zero the DTI
- Pull the wheel / shaft assembly OUTWARDS
- Note the reading

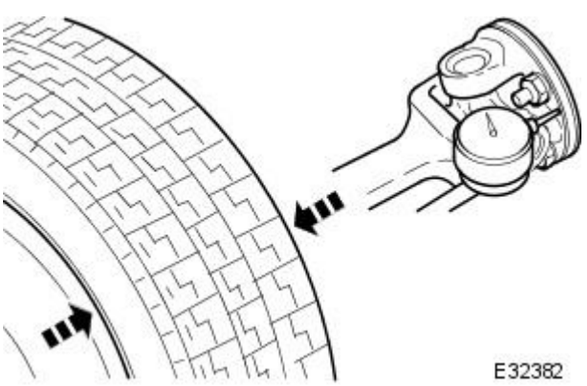

5. Check the specification

- 0 to 0,15 mm GOOD
- 0,15 mm + NOT GOOD; Renew the output shaft bearing

Rear Drive Axle / Differential - Axle Shaft

In-vehicle Repair

Special Tool(s)	
E36396	Hub remover 204-011
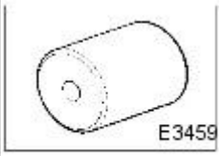 E3459	Thread protector JD 1D / 7

Removal

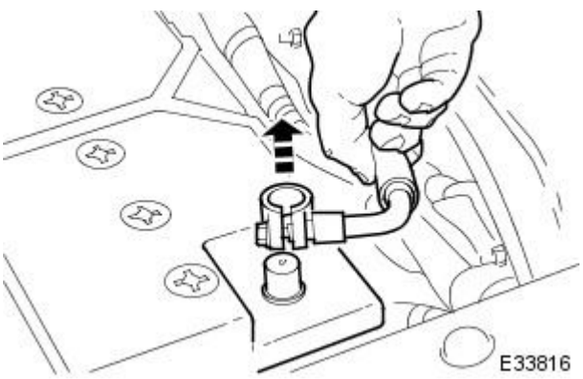

1. Disconnect the battery ground lead

2. Support the vehicle at the rear and remove the appropriate rear road wheel

3. Remove and discard the hub nut, apply the brakes to prevent rotation

4. Remove the brake caliper in accordance with 70.55.03, but do not disconnect the hydraulics

5. Prepare the hub carrier

1. 'Match mark' the hub carrier fulcrum bolt head and the carrier

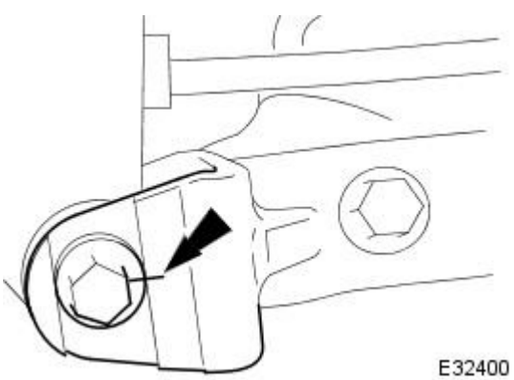

6. Prepare the hub carrier

1. Slacken the hub carrier fulcrum nut
2. Disconnect the ABS sensor multiplug at the hub carrier

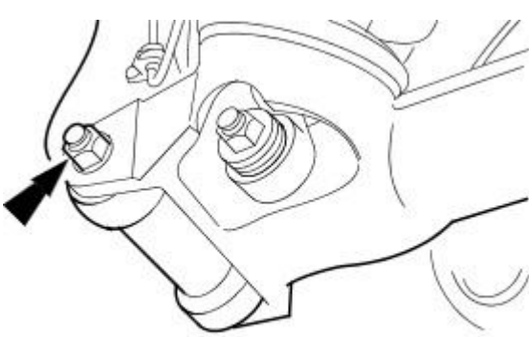

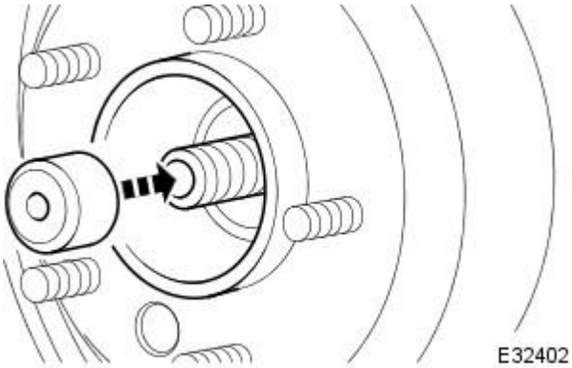

7. Protect the driveshaft thread with sprcial tool JD 1D / 7

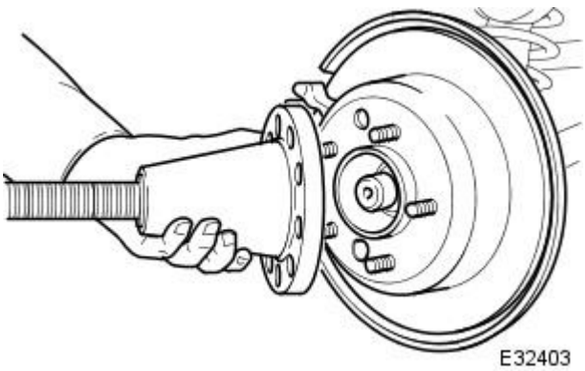

8. Withdraw the hub from the axle shaft

8. CAUTION: Take care not to introduce debris into the hub bearings, or damage the seal

- Using service tool 204 - 011, push the axle shaft through the hub

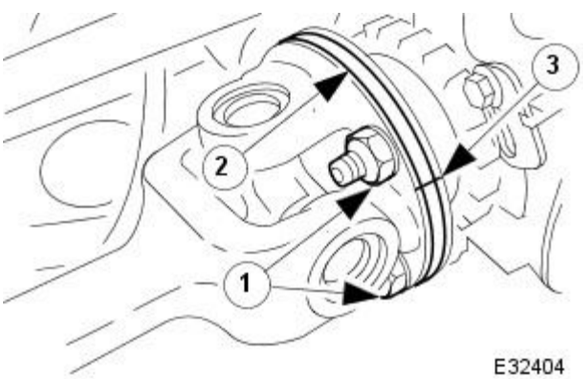

9. NOTE: In the wheel-free condition, the axle is in tension and the flanges will separate as the nuts are withdrawn

Release the axle shaft

1. Remove and discard the (4) nuts axle shaft to differential output shaft
2. Clear the axle shaft from the output flange studs
3. Remove and keep safe the camber shim

10. NOTE: The axle shaft nuts may damage the studs upon removal; check the thread condition by engaging a new nut 2 or 3 threads by hand.

Inspect the output flange studs and renew if there is evidence of damage / distortion

11. Clean all traces of thread locking agent from the hub splines (and axle shaft if it is to be re-used)

Installation

1. Installation is the reverse of the removal procedure, noting the following

2. Secure the axle shaft

1. Apply thread locking agent, to the SPLINE, as indicated
2. Refer to the illustration - do NOT re-use the original nut

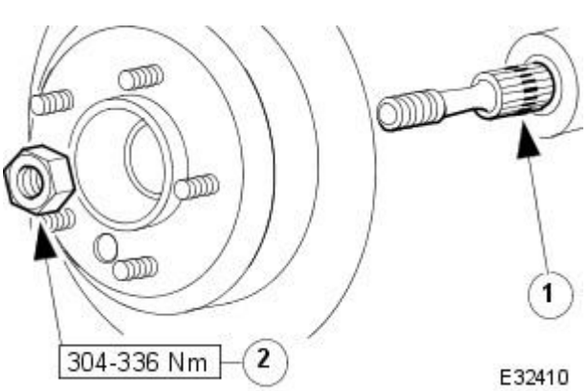

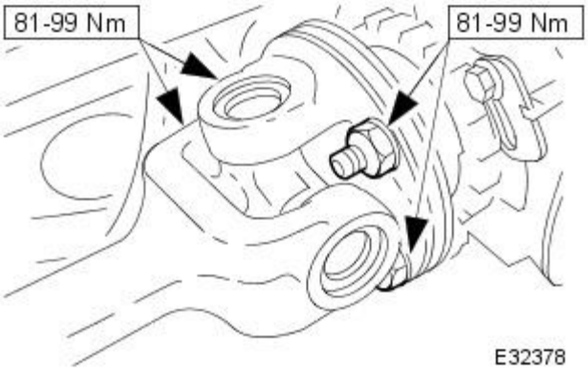

3. Refer to the illustration

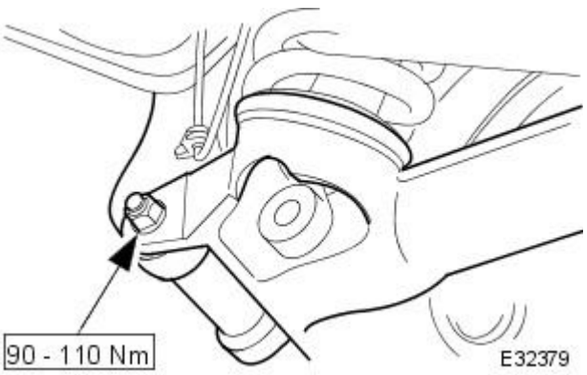

4. Refer to the illustration

- Ensure that the match marks are aligned prior to securing the fixing

5. Check and adjust as required, the final drive unit oil level

6. Check and adjust as required, the rear wheel alignment, 204-02.

Published: 11-May-2011

Rear Drive Axle / Differential - Differential Output Shaft Bearing

In-vehicle Repair

Special Tool(s)	
E36442	Replacer hub bearing 204-083

Removal

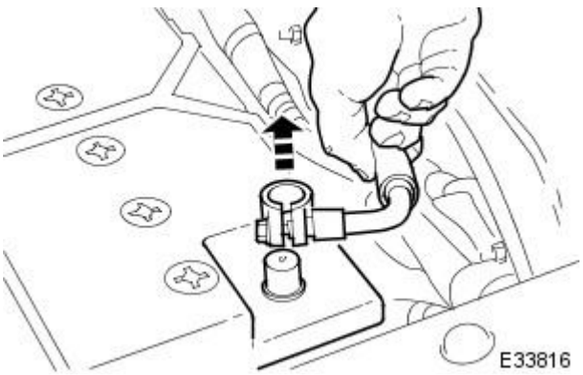

1. Disconnect the battery ground lead

2. Raise the vehicle for access

3. NOTE: In the wheel-free condition, the axle is in tension and the flanges will separate as the nuts are withdrawn

Release the axle shaft

1. Match mark the output and axle shaft flanges (if the output shaft is to be re-used)
2. Remove and discard the (4) nuts axle shaft to differential output shaft
3. Remove and keep safe the camber shim

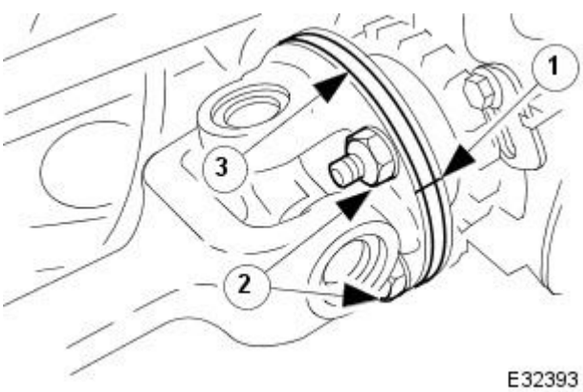

4. Thoroughly clean the area around the output shaft housing and differential case

5. Release the circlip and withdraw the output shaft assembly

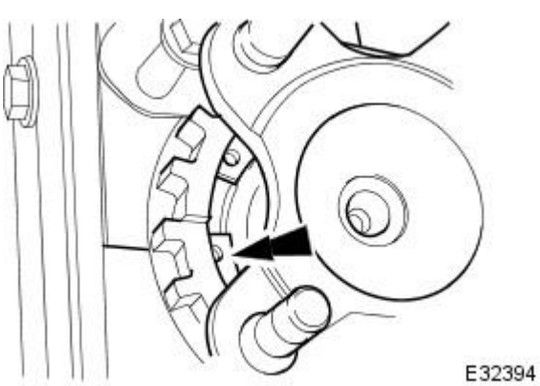

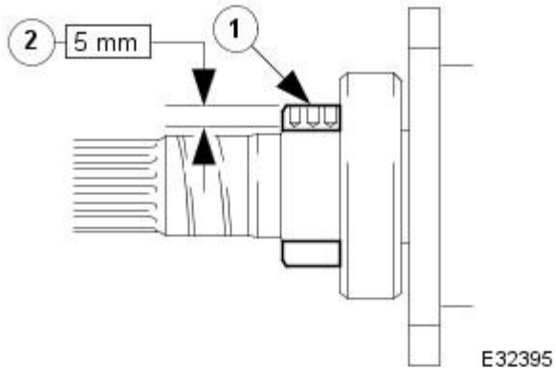

6. Prepare the retaining collar for removal

1. Mark the bearing retaining collar axially

6. CAUTION: Do not drill into the output shaft, it is not necessary to break the inside diameter of the collar

2. Drill 3 off holes 4,0 mm dia equally spaced, to a MAXIMUM depth of 5,0 mm

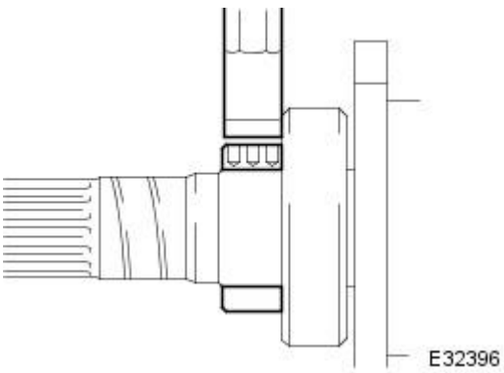

7. Remove the retaining collar

7. CAUTION: There is no need to split the collar when chiselling

- With a suitable chisel strike the collar across the three drilled holes (along the axis of the output shaft) to relieve tension within the steel

8. CAUTION: The original bearing must NOT be reused

Using a suitable press remove and discard the bearing, collar and circlip

Installation

1. Inspect the output shaft for damage and corrosion, replace as necessary

2. Identify the circlip cross section

1. This circlip is correct
2. This circlip MUST be discarded and the correct one used

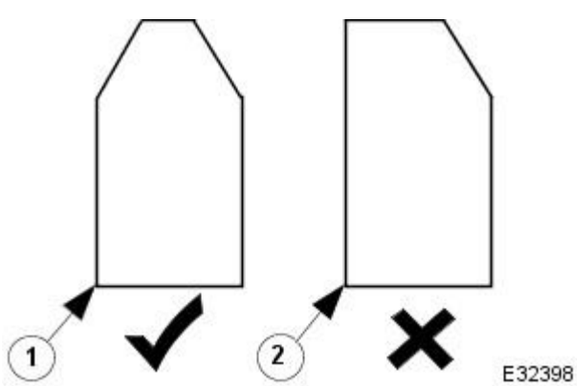

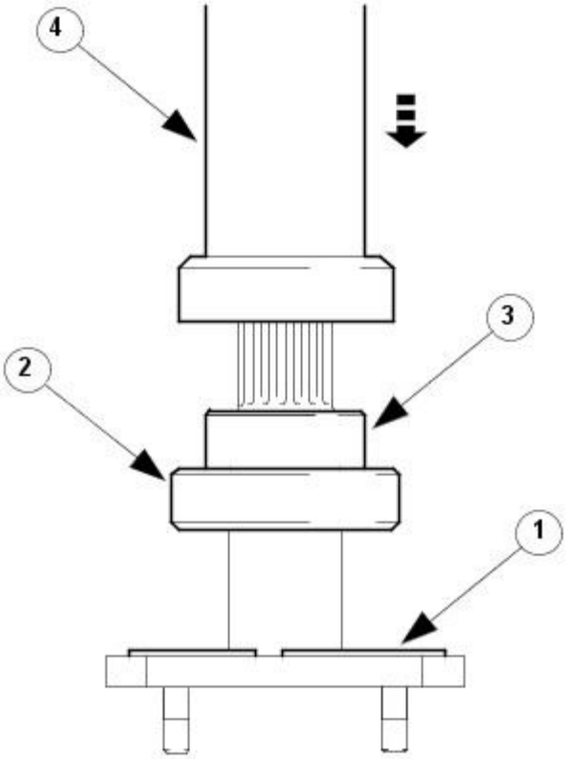

E32397

3. Fit the bearing using special tool 204 - 083

1. Position a new circlip
2. Locate the bearing
3. Locate the collar

• NOTE: It is strongly recommended that a press equipped with a pressure gauge is used, the assembly load MUST exceed 20Kn

4. Press the assembly

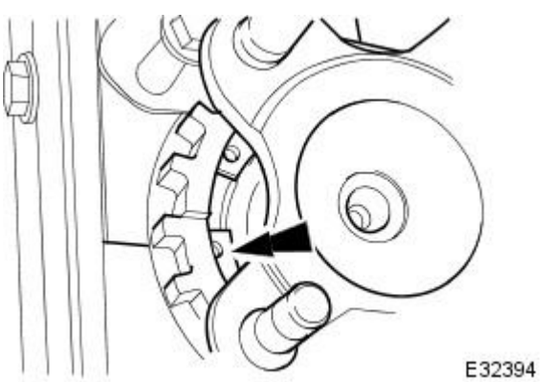
E32394

4. Fit the output shaft assembly to the final drive

- Lubricate the 'O' ring and seat the shaft assembly
- Secure the assembly with the circlip

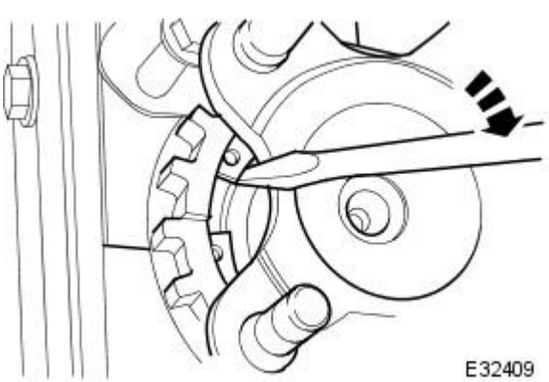
E32409

5. Ensure the correct circlip location

- Using a prybar, or similar, expand the circlip into its undercut by applying outward radial pressure. Start diametrically opposite to the circlip open ends and lever against the drive flange

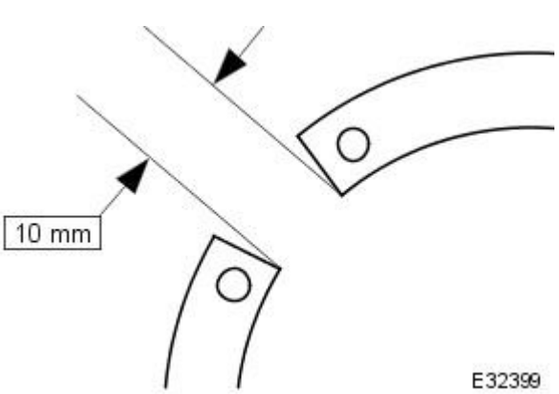

E32399

6. Verify the circlip location

1. The gap MUST be greater than 10,0 mm

6. ⚠ CAUTION: If the gap CANNOT be achieved, contact Jaguar Service

2. A gap smaller than specified will indicate an improperly fitted circlip. This may be rectified by refitting or by the application of radial pressure around the inner circumference of the circlip

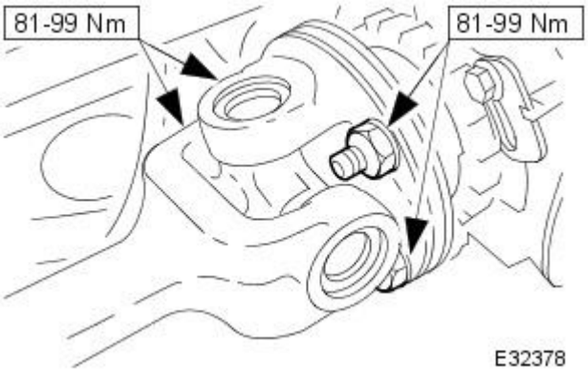

7. Verify that the output shaft end-float is within specification

8. Refer to the illustration

- If appropriate realign the previously made match marks

9. Check the final drive oil level and adjust as required

10. Check and adjust rear wheel camber setting

Rear Drive Axle / Differential - Drive Pinion Flange and Drive Pinion Seal

In-vehicle Repair

Special Tool(s)	
E36392	Wrench, Drive Pinion Flange 205-053
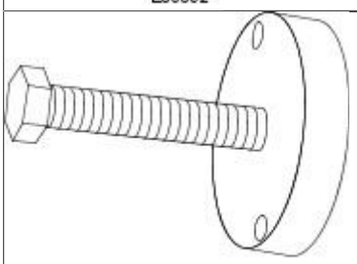 E31838	Remover, Drive Pinion Flange 303-588

Removal

1. Remove the driveshaft. For additional information, refer toSection 205-01 Driveshaft.

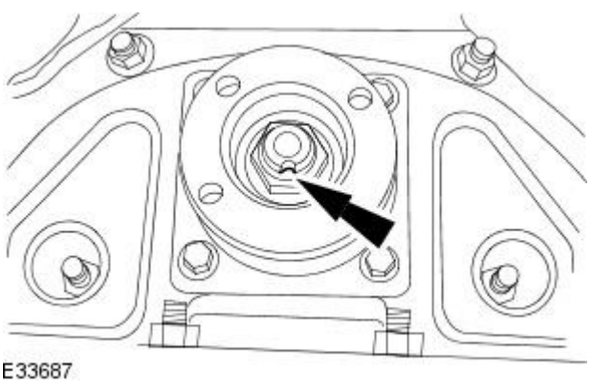

E33687

2. WARNING: Make sure no damage occurs to the input shaft.

Release the peened collar of the drive pinion flange retaining nut.

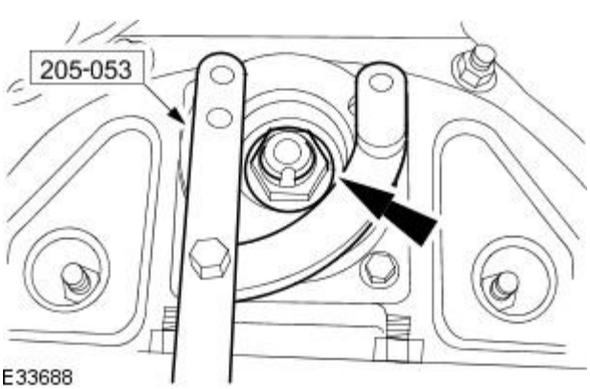

E33688

3. WARNING: Make sure no damage occurs to the input shaft threads.

Using the special tool, remove and discard the drive pinion flange retaining nut.

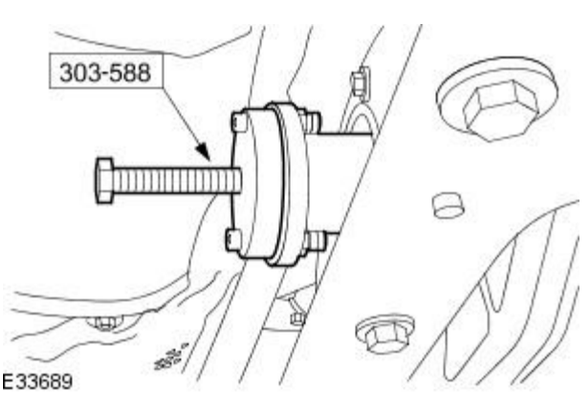

E33689

4. Using the special tool, remove and discard the drive pinion flange.

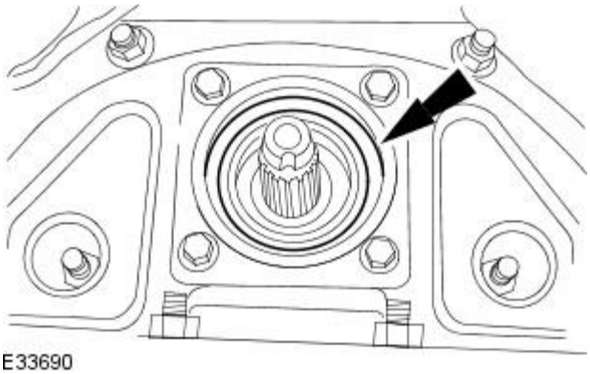

E33690

5. Remove and discard the ryton ring.

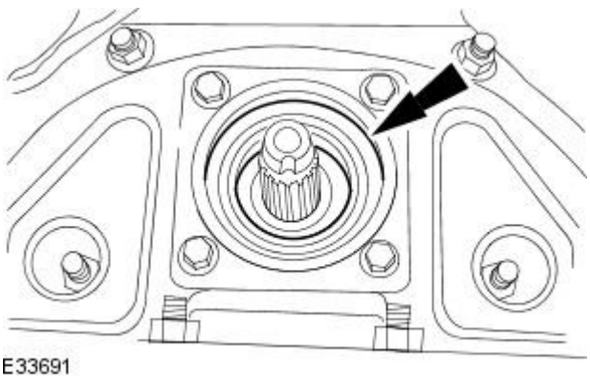

E33691

6. Remove and discard the drive pinion oil seal.

Installation

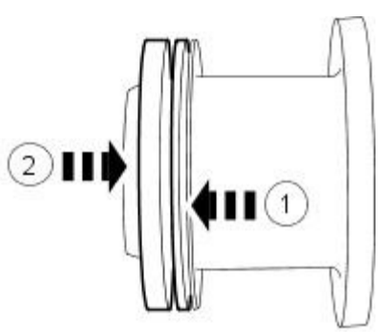

E33692

1. Slide the drive pinion oil seal and ryton ring against the shoulder of the drive pinion flange.

1. Position the ryton ring to the drive pinion oil seal.
2. Slide the drive pinion oil seal and ryton ring against the shoulder of the drive pinion flange.

2. NOTE: Apply a suitable amount of clean differential oil to lubricate the outer diameter of the drive pinion oil seal.

Loosely install the drive pinion flange assembly to the differential case.

3. Slide the drive pinion flange assembly into position until the drive pinion oil seal is adjacent to the differential case.

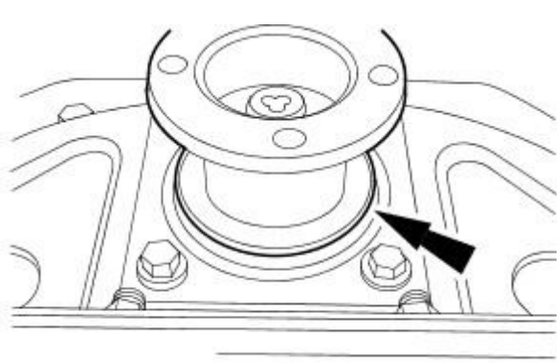

E33693

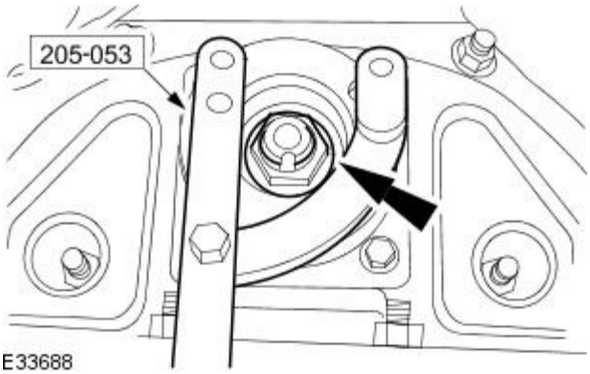

4. NOTE: Install a new drive pinion flange retaining nut.

• NOTE: Make sure the ryton ring has remained correctly positioned to the drive pinion oil seal.

Using the special tool, tighten the drive pinion flange retaining nut to 203 - 223 Nm.

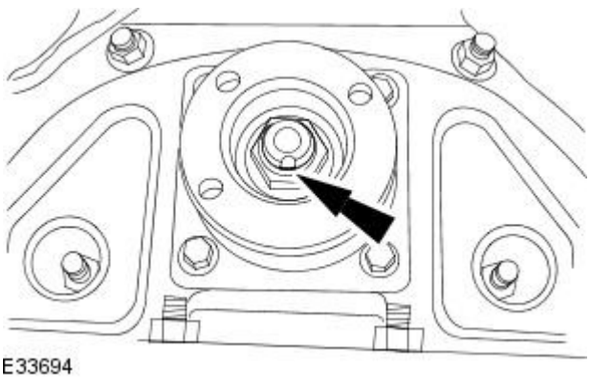

5. Peen the collar of the drive pinion flange retaining nut to the drive pinion.

6. Install the driveshaft. For additional information, refer toSection 205-01 Driveshaft.

7. Check the differential oil level, and if necessary, fill the differential with oil to the lower edge of the fill hole.

Rear Drive Axle / Differential - Axle Assembly

Removal and Installation

Special Tool(s)	
	Suspension Spring Compressor Tool 204-179

Removal

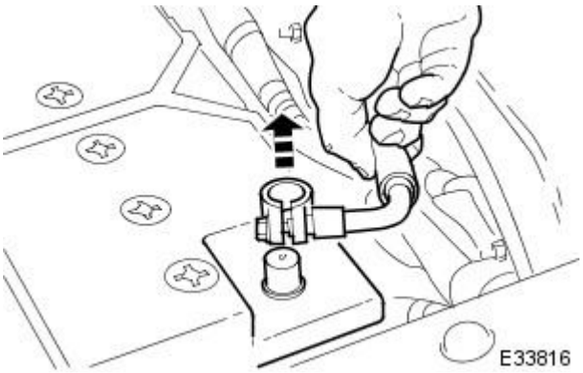

1. Disconnect the battery ground lead

2. Raise the vehicle for access

3. Remove both rear roadwheels

4. Remove the rear suspension assembly, 51.25.13

5. CAUTION: Do not lift the assembly by the driveshafts, this may cause damage

Using a suitable hoist, place the assembly onto a workbench

6. Locate the spring compressor 204 - 179 to the RH road spring

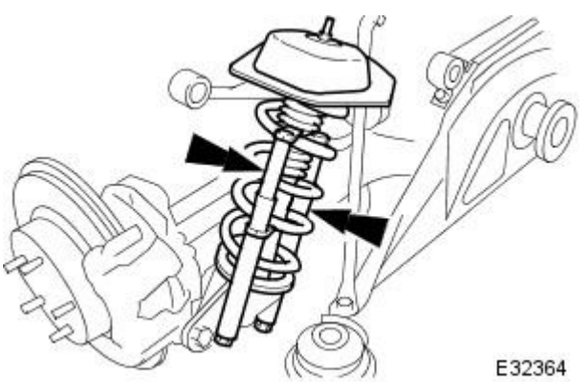

7. Tighten the spring compressor evenly to release the spring load on the damper

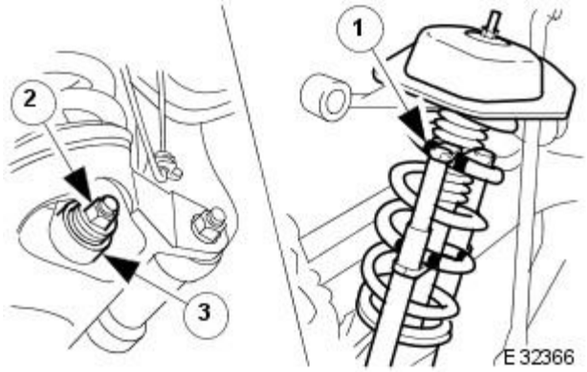

8. Remove the damper assembly

1. Mark the tool position on the spring with adhesive tape
2. Remove the damper lower fixing
3. Remove the damper assembly

9. Repeat for the opposite hand spring / damper unit

10. Release the parking brake cable

1. Disconnect the cable in-line connector
2. Remove the outer cable to frame clips (2)
3. Clear the cable through the frame

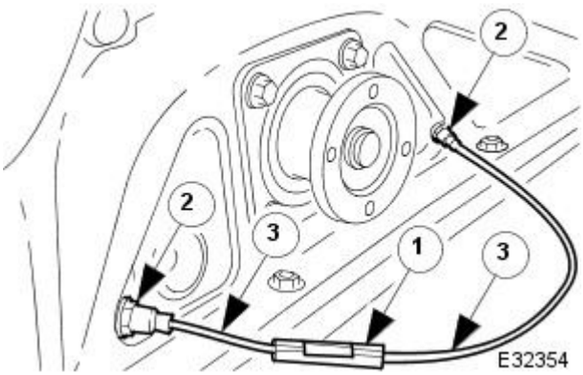

11. Remove the LH hub and axle shaft assembly

1. Remove the lower fulcrum shaft nut (1)
2. Remove the axle shaft to drive flange fixings (4)
3. Turn the axle-shaft for access to access the fixings for step 2
4. Support the axle shaft assembly and remove the hub fulcrum
5. Remove the hub and axle shaft assembly
6. Note the position of and remove the camber adjustment spacer

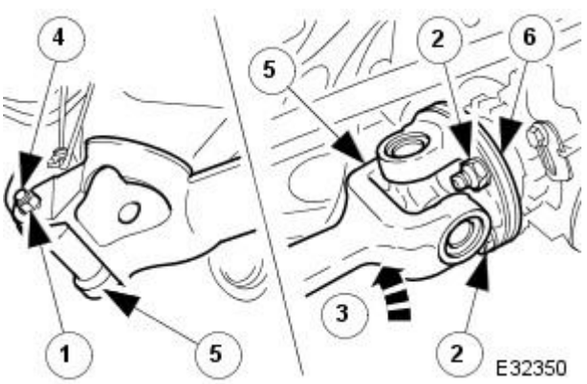

12. Repeat for the opposite hand

13. Remove the final drive nose plate.

1. Remove the final drive nose plate bolts (4)
2. Remove the final drive nose plate

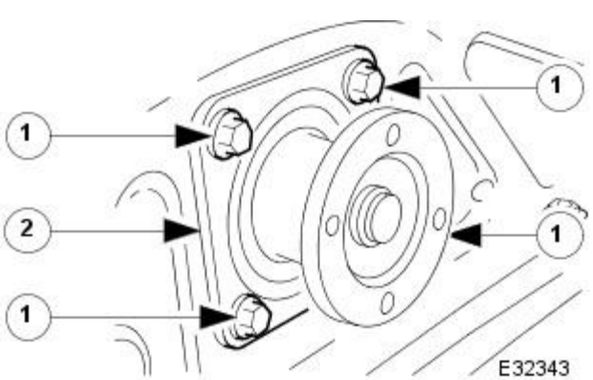

14. Position the axle assembly on its LH side and support it on wooden blocks

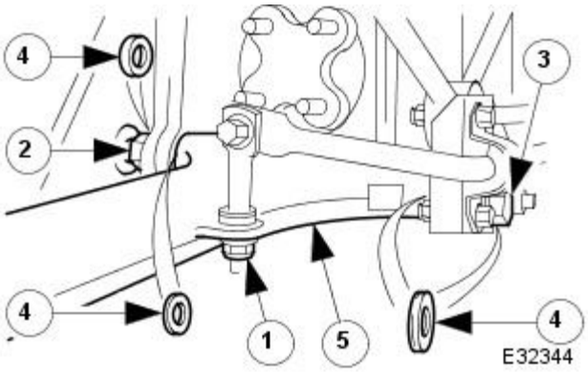

15. Remove the wishbone

1. Remove the fixing, stabilizer bar link to wishbone
2. Remove the pivot nut
3. Remove pivot
4. Note the position of and remove the front spacer and rear washers
5. Remove the wishbone

16. Repeat for the opposite hand

17. Remove the wishbone tie assembly

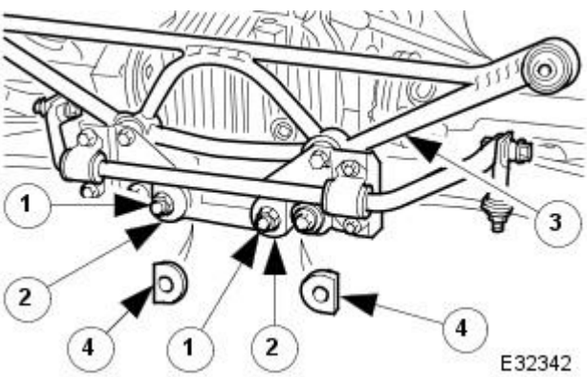

1. Remove the wishbone tie to final drive fixings (2)
2. Remove the washers (2)
3. Remove the wishbone tie assembly
4. Remove the washers (2)

18. Remove the tie rods

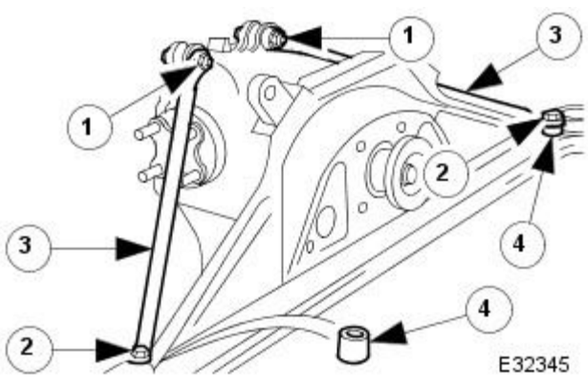

1. Remove the tie rod to final drive fixings (2)
2. Remove the tie rods to wide mounting bracket fixings (2)
3. Remove the tie rods
4. Note the position of and remove the spacers

19. Position the assembly for access to the 'A' frame to final drive fixings, noting that oil may issue from the breather

20. Remove the 'A' frame assembly

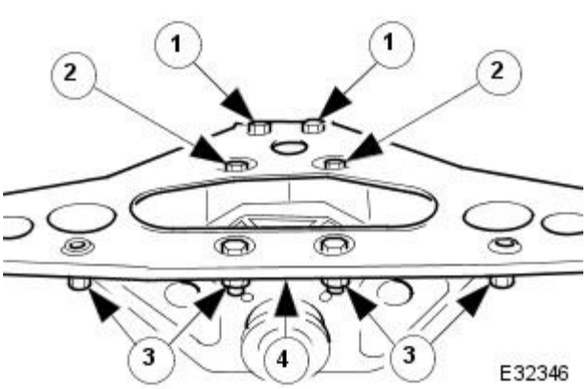

1. Remove the 'A' frame to rear mounting bracket fixings (2)
2. Remove the 'A' frame to final drive fixings (2)
3. Remove the 'A' frame to wide mounting bracket fixings (2)
4. Remove the 'A' frame assembly

21. Remove the 'A' frame rear mounting bracket

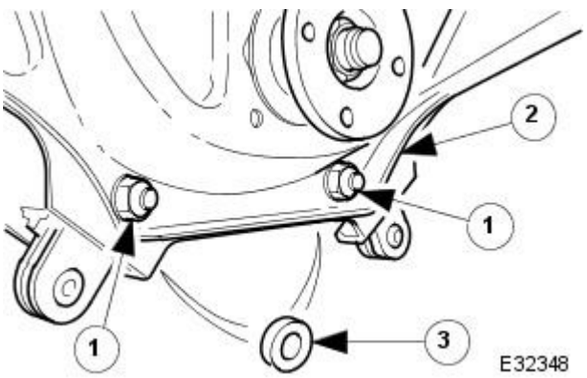

22. Remove the wide mounting bracket assembly

1. Remove the wide mounting bracket / pendulum assembly to final drive fixings (2)
2. Remove the wide mounting bracket assembly
3. Remove the washers (2)

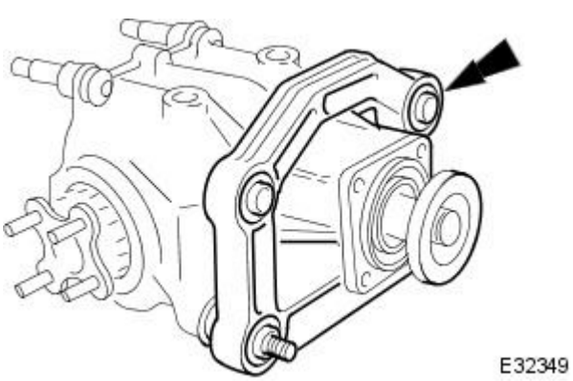

23. Remove the pendulum assembly

Installation

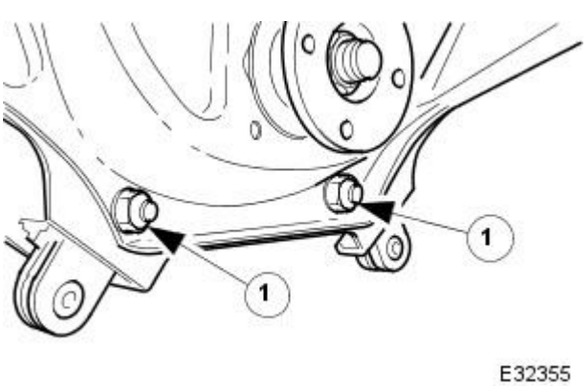

1. Installation is the reverse of the removal procedure noting the following

2. Locate the wide mounting bracket to the final drive.

1. Loose assemble the wide mounting bracket / pendulum to final drive fixings

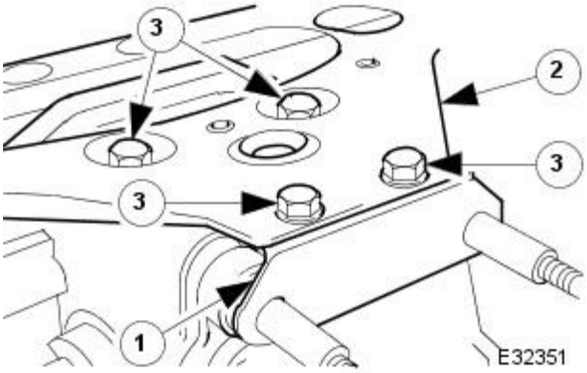

3. Locate the 'A' frame rear bracket and 'A' frame assembly

1. Fit the 'A' frame rear bracket
2. Fit the 'A' frame assembly
3. Loose assemble the 'A' frame to final drive fixings

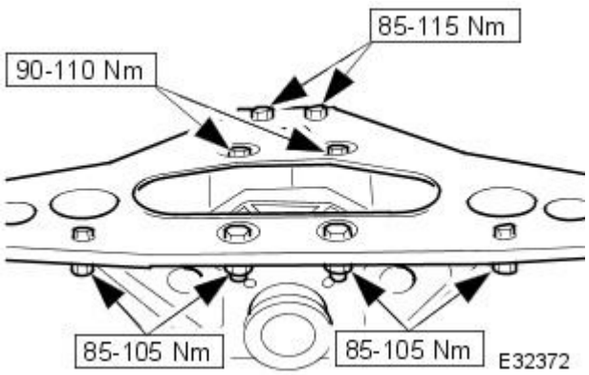

4. Refer to the illustration

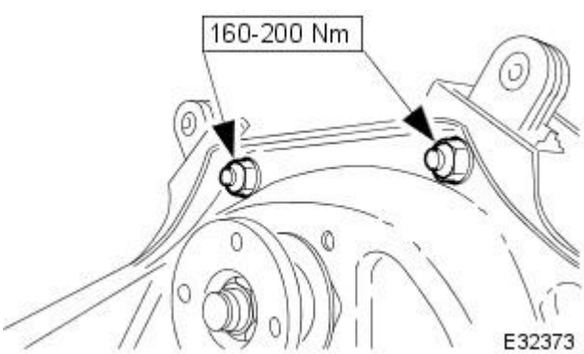

5. Refer to the illustration

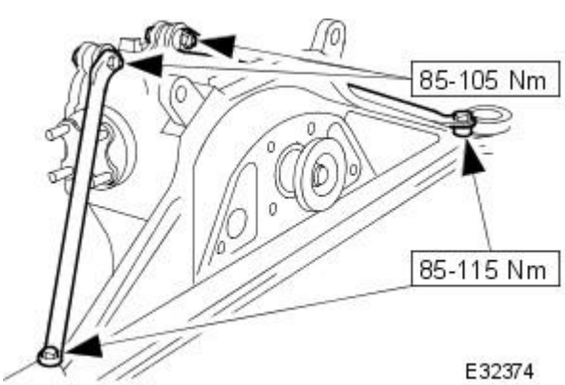

6. Refer to the illustration

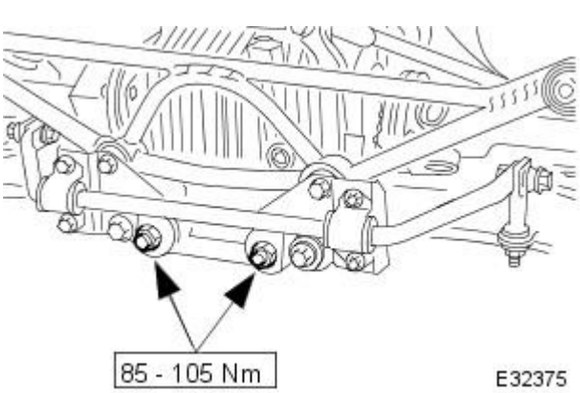

7. NOTE: Ensure the correct orientation of the flat sided washers

Refer to the illustration

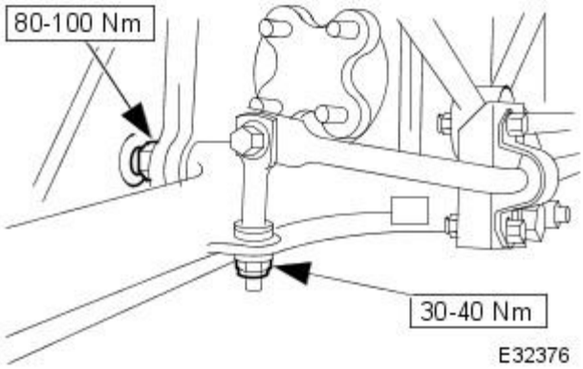

8. Refer to the illustration

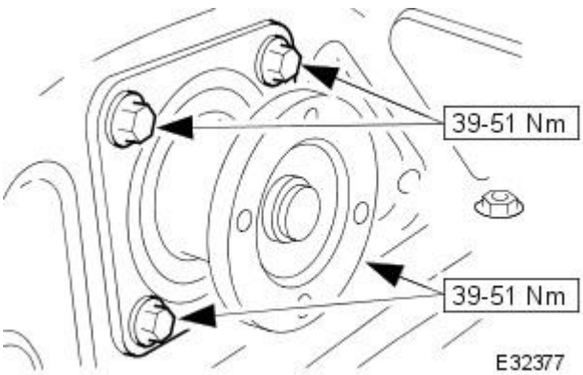

9. Refer to the illustration

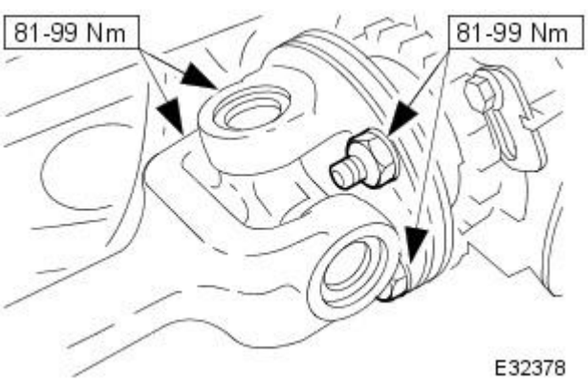

10. Refer to the illustration

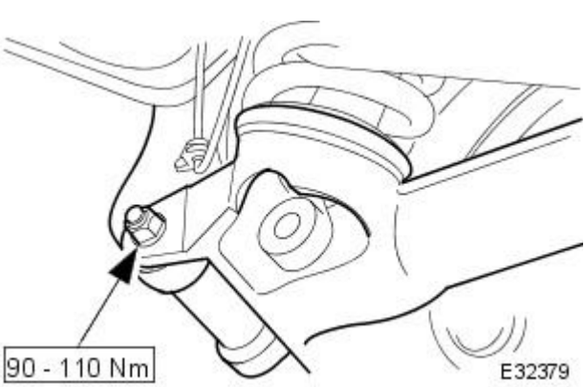

11. Refer to the illustration

12. Ensure that the spring pan and wishbone location reflects the original condition

13. Refer to the illustration

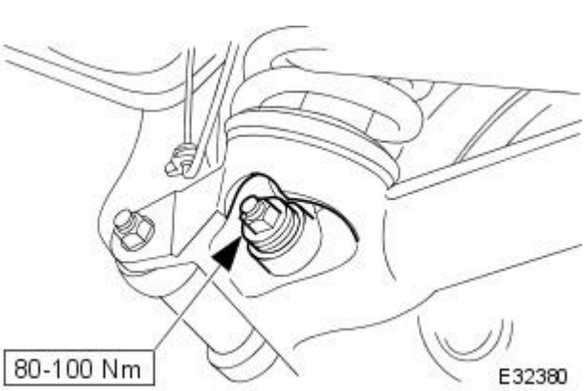

14. Check and adjust as required, the final drive unit oil level

15. Check and adjust as required, the rear wheel alignment, 204-02.

Brake System - General Information -

Lubricants, Fluids, Sealants and Adhesives

CAUTION: Do not use brake fluid ITT Super Dot 4 on 2006my vehicles onwards. Failure to follow this instruction may result in damage to the vehicle.

• NOTE: Brake fluid ITT Super Dot 4 has now been superseded by Shell ESL Super Dot 4 which is the Jaguar recommended brake fluid. Shell ESL Super Dot 4 can be used on all model years.

Unit	Specification
Brake fluid	ITT Super Dot 4
Brake fluid	Shell ESL Super Dot 4
Brembo Brake Grease	Molikote Cu 7439

Front Brake Dimensions

• NOTE: When a component reaches its maximum / minimum dimension limit the component must be replaced. Care must be taken when refinishing brake discs that the dimension limits are not exceeded.

Component	Dimension - Vehicles without: Brembo Brakes	Dimension - Vehicles with: Brembo Brakes
Brake disc - diameter	305 mm	355 mm
Brake disc - thickness (new)	28 - 28.5 mm	32 mm
Brake disc - minimum thickness	26 mm	30 mm
Brake disc - minimum wall thickness	6.2 mm	6.7 mm
Installed brake disc - maximum run-out	0.1 mm	0.1 mm
Brake pad - minimum thickness	2 mm	2 mm
Caliper piston diameter	60 mm	40/44 equivalent 60 mm

Rear Brake Dimensions

• NOTE: When a component reaches its maximum / minimum dimension limit the component must be replaced. Care must be taken when refinishing brake discs and drums that the dimension limits are not exceeded.

Component	Dimension - Vehicles without: Brembo Brakes	Dimension - Vehicles with: Brembo Brakes
Brake disc - diameter	305 mm	330 mm
Brake disc - thickness (new)	19.5 - 20 mm	28 mm
Brake disc - minimum thickness	18.5 mm	26 mm
Brake disc - minimum wall thickness	4.9 mm	6.7 mm
Installed brake disc - maximum run-out	0.15 mm	0.1mm
Caliper piston diameter	42 mm	28/30 equivalent 41 mm
Parking brake drum - maximum diameter	181 mm	181 mm
Brake pad - minimum thickness	2 mm	2 mm
Parking brake shoes - minimum thickness	2 mm	2 mm

Published: 11-May-2011

Brake System - General Information - Brake System

Description and Operation

Details of the Brake System can be found in sections 206-03, 206-04, 206-05, 206-06, 206-07 and 206-09.

Published: 11-May-2011

Brake System - General Information - Brake System

Diagnosis and Testing

Principles of Operations

The brake system operates by transferring effort applied to the brake pedal, by the driver to the brakes at each wheel.

The braking effort is distributed to each wheel, using a hydraulic system. The system is assisted using a vacuum brake booster that reduces pedal effort for a given hydraulic pressure. The parking brake operates on the rear wheels and is applied using a hand operated control.

Inspection and Verification

• NOTE: Prior to carrying out any diagnosis, make sure that the brake system warning indicator is functional.

Visually examine the front and rear tire and wheel assemblies for damage such as uneven wear patterns, tread worn out or sidewall damage. Verify the tires are the same size, type and, where possible, same manufacture. Replace the damaged wheel or excessively worn tire. For additional information, refer toSection 204-04 Wheels and Tires.

Wheels and tires must be cleared of any foreign matter and tire pressures adjusted to the correct specification.

If the tires exhibit uneven wear or feathering, the cause must be corrected. Check the steering and suspension components for damage or wear and, if necessary, check and adjust front wheel alignment. For additional information, refer toSection 204-00 Suspension System - General Information.

Road Test

Visual Inspection Chart

Mechanical	Electrical
Brake master cylinder	Parking brake switch
Brake caliper piston(s)	Damaged or corroded wiring harness
Brake discs	Brake master cylinder fluid level switch
Wheel bearings	
Brake pads	
Power brake booster	
Brake pedal linkage	
Booster vacuum hose	
Tires	
Debris	

Carry out a road test to compare actual vehicle braking performance with the performance standards expected by the driver. The ability of the test driver to make valid comparisons and detect performance deficiencies will depend on experience.

The driver should have a thorough knowledge of brake system operation and accepted general performance guidelines to make good comparisons and detect performance concerns.

An experienced brake technician will always establish a route that will be used for all brake diagnosis road tests. The roads selected will be reasonably smooth and level. Gravel or bumpy roads are not suitable because the surface does not allow the tires to grip the road equally. Crowned roads should be avoided because of the large amount of weight shifted to the low set of wheels on this type of road. Once the route is established and consistently used, the road surface variable can be eliminated from the test results.

Before a road test, obtain a complete description of the customer concerns or suspected condition. From the description, the technician's experience will allow the technician to match possible causes with symptoms. Certain components will be tagged as possible suspects while others will be eliminated by the evidence. More importantly, the customer description can reveal unsafe conditions which should be checked or corrected before the road test. The description will also help form the basic approach to the road test by narrowing the concern to specific components, vehicle speed or conditions.

Begin the road test with a general brake performance check. Keeping the description of the concern in mind, test the brakes at different vehicle speeds using both light and heavy pedal pressure. To determine if the concern is in the front or rear braking system, use the brake pedal and then use the parking brake control. If the condition (pull, vibration, pulsation) occurs only with the parking brake, the concern is in the rear brake system.

If the concern becomes evident during this check, verify it fits the description given before the road test. If the concern is not evident, attempt to duplicate the condition using the information from the description.

If a concern exists, use the Symptom Chart in order to isolate it to a specific sub-system and condition description. From this description, a list of possible sources can be used to further narrow the cause to a specific component or condition.

Symptom Chart

Symptom	Possible Sources	Action
Brakes noisy	* Brake pads. * Brake discs.	* GO to Pinpoint Test A.
Vibration when brakes are applied	* Wheels require balancing. * Wheel hub nuts. * Caliper mounting bolts. * Brake pads. * Foreign material/scratches/corrosion on brake disc contact surfaces. * Excessive brake disc thickness variation. * Excessive brake disc runout. * Wheel bearing wear or failure. * Suspension bush wear or failure. * Steering bush wear or failure.	* Go to Pinpoint Test B.
The brakes pull or drift	* Tire pressures/wear. * Calipers. * Brake pads. * Brake discs. * Wheel alignment adjustment. * Wheel bearing. * Suspension bushes and ball joints.	* GO to Pinpoint Test C.

The pedal feels spongy	* Air in brake system. * Leak in hydraulic system. * Brake booster/master cylinder. * Brake pads.	* GO to Pinpoint Test D.
The pedal goes down fast	* Air in brake system. * Leak in hydraulic system. * Brake booster/master cylinder. * Brake pads.	* GO to Pinpoint Test E.
The pedal goes down slowly	* Air in brake system. * Brake booster/master cylinder.	* Go to Pinpoint Test F.
Excessive brake pedal effort	* Brake pads. * Brake booster.	* GO to Pinpoint Test G.
Brake lockup during light brake pedal force	* Brake pads. * Calipers.	* GO to Pinpoint Test H.
Brakes drag	* Parking brake control applied/malfunction. * Seized parking brake cables. * Seized caliper slide pins. * Seized caliper. * Brake booster. * Pedal gear.	* GO to Pinpoint Test I.
Excessive/Erratic brake pedal travel	* Hydraulic system. * Brake pads. * Brake discs. * Hub and bearing assembly.	* GO to Pinpoint Test J.
The red brake warning indicator is always on	* Fluid level.	* FILL the system to specification. CHECK for leaks.
	* Brake fluid level sensor.	* INSTALL a new brake master cylinder fluid reservoir. For additional information, refer toSection 206-06 Hydraulic Brake Actuation.
	* Parking brake control.	* RELEASE and ADJUST the parking brake. For additional information, refer toSection 206-05 Parking Brake and Actuation.
	* Electrical circuit.	* For additional information, refer to PDU for analysis/rectification of the concern.
Slow or incomplete brake pedal return	* Brake pedal binding. * Brake booster/master cylinder.	* GO to Pinpoint Test K.

PINPOINT TEST A : BRAKES NOISY	
TEST CONDITIONS	**DETAILS/RESULTS/ACTIONS**
A1: INSPECT BRAKE PADS	
	1 Inspect the condition of the front and rear brake pads. Check for damage to any anti-squeal shims.
	Are the brake pads OK? **Yes** GO to A2. **No** CLEAN the front brake pads or INSTALL new front brake pads if necessary. For additional information, refer toSection 206-03 Front Disc Brake. CLEAN the rear brake pads or INSTALL new rear brake pads if necessary. For additional information, refer toSection 206-04 Rear Disc Brake. Test vehicle for presence of brake squeal.
A2: INSPECT BRAKE DISCS	
	1 Inspect the brake discs for excessive corrosion, wear or disc thickness variation.
	Does excessive corrosion, wear or disc thickness variation exist? REFER to Specification - in this section. **Yes** INSTALL new front brake discs and brake pads. For additional information, refer toSection 206-03 Front Disc Brake. INSTALL new rear brake discs and brake pads. For additional information, refer toSection 206-04 Rear Disc Brake. TEST the system for normal operation. **No** Vehicle is OK.

PINPOINT TEST B : VIBRATION WHEN BRAKES ARE APPLIED	
TEST CONDITIONS	**DETAILS/RESULTS/ACTIONS**
B1: ROAD TEST VEHICLE	
	1 Road test the vehicle between 40-80 km/h (25-50 mph) without applying brakes.
	Is the vibration present? **Yes** TEST for noise vibration and harshness. REPEAT road test if necessary. **No** GO to B2. .
B2: CHECK FOR BRAKE VIBRATION	
	1 Road test the vehicle between 40-80 km/h (25-50 mph) with light and medium application on the brake pedal.
	Is a vibration present? **Yes** If the vibration is from the front of the vehicle GO to B3. If the vibration is from the rear of the vehicle or can not be diagnosed between front or rear of the vehicle GO to B6. **No** Vehicle is OK.
B3: CHECK THE SUSPENSION AND STEERING COMPONENTS	
	1 Check the condition of the front suspension bushes and ball joints REFER to Section 204-01 Front Suspension. Check the condition of the steering linkage components REFER to Section 211-02 Power Steering / 211-03 Steering Linkage.
	Do any of the front suspension components or steering components require replacement? **Yes** INSTALL new components as necessary REFER to Section 204-01 Front Suspension / 211-02 Power Steering / 211-03 Steering Linkage.

	Road test the vehicle between 40-80 km/h (25-50 mph) with light and medium application on the brake pedal. If vibration still exists GO to B4. **No** GO to B4.
B4: CHECK THE FRONT BRAKE PADS AND FRONT BRAKE DISCS	
	1 Check the condition of the front brake pads and front brake discs.
	Does excessive brake disc runout or brake disc thickness variation exist? REFER to Specification - / Front Brake Disc Runout Check - Vehicles With: Brembo Brakes / Front Brake Disc Runout Check - Vehicles Without: Brembo Brakes in this section. **Yes** GO to B5. **No** GO to B6.
B5: CHECK VEHICLE FOR A HISTORY OF BRAKE VIBRATION PROBLEMS	
	1 Check to see if the vehicle has recently been repaired for brake vibration problems by the installation of new front brake discs and pads.
	Has vehicle has recently been repaired for brake vibration problems by the installation of new front brake discs and pads. **Yes** INSTALL new front wheel hubs REFER to Section 204-01 Front Suspension. INSTALL new front brake discs and front brake pads REFER to Section 206-03 Front Disc Brake. TEST the system for normal operation. **No** INSTALL front brake discs and front brake pads REFER to Section 206-03 Front Disc Brake. CHECK for excessive brake disc runout REFER to Front Brake Disc Runout Check - Vehicles With: Brembo Brakes / Front Brake Disc Runout Check - Vehicles Without: Brembo Brakes in this section. If excessive brake disc runout exists INSTALL new front wheel hubs REFER to Section 204-01 Front Suspension. TEST the system for normal operation.
B6: CHECK THE REAR BRAKE PADS AND REAR BRAKE DISCS	
	1 Check the condition of the rear brake pads and rear brake discs.
	Does excessive brake disc runout or brake disc thickness variation exist? REFER to Specification - / Rear Brake Disc Runout Check - Vehicles Without: Brembo Brakes / Rear Brake Disc Runout Check - Vehicles With: Brembo Brakes in this section. **Yes** INSTALL rear brake discs and rear brake pads REFER to Section 206-04 Rear Disc Brake. CHECK for excessive brake disc runout. REFER to Rear Brake Disc Runout Check - Vehicles With: Brembo Brakes / Rear Brake Disc Runout Check - Vehicles Without: Brembo Brakes in this section. If excessive brake disc runout exists INSTALL new rear wheel hubs. TEST the system for normal operation. **No** REPEAT road test and re-check for a vibration concern. If vibration exists GO to B3.

PINPOINT TEST C : THE BRAKES PULL OR DRIFT	
TEST CONDITIONS	**DETAILS/RESULTS/ACTIONS**
C1: ROAD TEST VEHICLE	
	1 Road test the vehicle and apply the brake pedal.
	Does the vehicle pull or drift? **Yes** GO to C2. **No** Vehicle is OK.
C2: INSPECT TIRE PRESSURE	
	1 Check for excessive tire wear or incorrect pressures.
	Are the tires at the correct pressure and in good condition? **Yes** GO to C3. **No** ADJUST the tire pressures or INSTALL new tires if excessively worn. TEST the system for normal operation.
C3: CHECK CALIPERS	
	1 Check the front caliper pistons for binding, leaking or sticking. For additional information, refer toSection 206-03 Front Disc Brake. Check the rear caliper pistons for binding, leaking or sticking. For additional information, refer toSection 206-04 Rear Disc Brake.
	Do the disc brake caliper pistons and pins bind, leak or stick? **Yes** INSTALL new calipers as necessary. TEST the system for normal operation. **No** GO to C4.
C4: INSPECT BRAKE DISCS	
	1 Check the brake discs for excessive damage, thickness variation or runout. For additional information, refer to General Procedures in this section.
	Does excessive damage or runout exist? **Yes** INSTALL new brake discs and brake pads as necessary. TEST the system for normal operation. **No** GO to C5.
C5: INSPECT THE FRONT HUB AND WHEEL BEARING ASSEMBLY	
	1 Check the front hub and wheel bearing assembly. For additional information, refer toSection 204-00 Suspension System - General Information.

	Are the wheel bearings OK? **Yes** GO to C6. **No** INSTALL new wheel bearings. For additional information, refer toSection 204-01 Front Suspension. TEST the system for normal operation.
C6: CHECK SUSPENSION BUSHES AND BALL JOINTS.	
	1 Check all suspension bushes and ball joints.
	Are the suspension bushes and ball joints OK? **Yes** Vehicle is OK. **No** INSTALL new front suspension bushes and ball joints as required. For additional information, refer toSection 204-01 Front Suspension. INSTALL new rear suspension bushes and ball joints as required. For additional information, refer toSection 204-02 Rear Suspension.

PINPOINT TEST D : THE PEDAL FEELS SPONGY	
TEST CONDITIONS	**DETAILS/RESULTS/ACTIONS**
D1: CHECK FOR SPONGY PEDAL (ENGINE OFF)	
	1 Check for a firm brake pedal.
	Is the brake pedal effort and brake pedal travel normal? **Yes** Vehicle is OK. **No** GO to D2.
D2: CHECK BRAKE PEDAL RESERVE (ENGINE OFF)	
	1 Pump the brake pedal 10 times and hold on the final application.
	Does the brake pedal feel firm on final application? **Yes** GO to D3. **No** BLEED the brake system. For additional information, refer to General Procedures in this section. TEST the system for normal operation.
D3: CHECK BRAKE PEDAL RESERVE (ENGINE ON)	
	1 Engine is idle.
	2 Apply the brake pedal lightly three or four times.
	3 Wait 15 seconds for the vacuum to recover.
	4 Push down on the brake pedal until it stops moving downward or an increased resistance to the brake pedal travel occurs.
	5 Hold the brake pedal in the applied position while increasing the engine speed to 2000 revs/min.
	6 Release the accelerator pedal.
	Does the brake pedal move downward as the engine speed returns to idle? **Yes** GO to D4. **No** CHECK the vacuum to brake booster. For additional information, refer toSection 206-07 Power Brake Actuation.
D4: CHECK BRAKE FLUID LEVEL	
	1 Check the brake master cylinder reservoir fluid level.
	Is the fluid level OK? **Yes** BLEED the brake system. For additional information, refer to General Procedures in this section. TEST the system for normal operation. **No** CHECK brake master cylinder reservoir sealing points. For additional information, refer to Brake Master Cylinder in this section. ADD fluid and BLEED the brake system. For additional information, refer to General Procedures in this section. TEST the system for normal operation. REPEAT road test if necessary.

PINPOINT TEST E : THE PEDAL GOES DOWN FAST	
TEST CONDITIONS	**DETAILS/RESULTS/ACTIONS**
E1: ROAD TEST VEHICLE	
	1 Road test and apply the brake pedal.
	Is the brake pedal effort and brake pedal travel normal? **Yes** Vehicle is OK. **No** GO to E2.
E2: CHECK BRAKE FLUID LEVEL	
	1 Check the brake master cylinder reservoir fluid level.
	Is the fluid level within specification? **Yes** GO to E3. **No** CHECK the brake master cylinder reservoir sealing points. For additional information, refer to Brake Master Cylinder Component Test in this section. ADD fluid and BLEED brake system. For additional information, refer to General Procedures in this section. TEST the system for normal operation. REPEAT road test if necessary.
E3: CHECK BRAKE PEDAL TRAVEL-PRESSURIZE SYSTEM	
	1 Pump the brake pedal rapidly (five times).
	Does the brake pedal travel build up and then hold? **Yes** BLEED the brake system. For additional information, refer to General Procedures in this section. TEST the system for normal operation. REPEAT road test. **No** GO to E4.
E4: CHECK FOR BRAKE SYSTEM LEAKS	
	1 Check for external brake system leaks. For additional information, refer to Master Cylinder in this section.

	Are leaks found? **Yes** REPAIR as necessary, ADD fluid and BLEED brake system. For additional information, refer to General Procedures in this section. TEST the system for normal operation. REPEAT road test. **No** System is OK.

PINPOINT TEST F : THE PEDAL GOES DOWN SLOWLY	
TEST CONDITIONS	**DETAILS/RESULTS/ACTIONS**
F1: ROAD TEST VEHICLE - CHECK BRAKE PEDAL OPERATION	
	1 Check if the condition occurs during actual stopping application by applying the brake pedal while the vehicle is moving.
	Does the condition occur when the vehicle is moving? **Yes** GO to F2. **No** GO to F3.
F2: CHECK FOR BRAKE SYSTEM LEAKS	
	1 Check for external brake system leaks. For additional information, refer to Master Cylinder in this section.
	Are there any external brake system leaks? **Yes** REPAIR as necessary. ADD fluid and BLEED the brake system. For additional information, refer to General Procedures in this section. TEST the system for normal operation. **No** GO to F3.
F3: CARRY OUT A BRAKE MASTER CYLINDER BYPASS TEST	
	1 Test for brake master cylinder bypass condition. Refer to Brake Master Cylinder Component Test in this section.
	Are any concerns found? **Yes** INSTALL a new brake master cylinder, ADD fluid and BLEED the brake system. For additional information, refer to General Procedures in this section. TEST the system for normal operation. **No** System is OK.

PINPOINT TEST G : EXCESSIVE BRAKE PEDAL EFFORT	
TEST CONDITIONS	**DETAILS/RESULTS/ACTIONS**
G1: CHECK BRAKE PADS	
	1 Check the brake pads for wear, contamination, correct installation, damage and type.
	Are any concerns found? **Yes** INSTALL the front brake pads correctly or INSTALL new front brake pads if necessary. For additional information, refer toSection 206-03 Front Disc Brake. INSTALL the rear brake pads correctly or INSTALL new rear brake pads if necessary. For additional information, refer toSection 206-04 Rear Disc Brake. REPEAT road test. **No** GO to G2.
G2: CHECK VACUUM	
	1 Disconnect the vacuum booster hose from the booster.
	2 Connect a vacuum/pressure tester to the vacuum hose.
	3 Run the engine at normal operating temperature.
	4 Record the vacuum reading.
	Is the reading 40.5kPa (12 in-Hg) or greater? **Yes** GO to G3. **No** LOCATE and REPAIR the source of low vacuum. TEST the system for normal operation.
G3: INSPECT SYSTEM	
	1 Switch the engine off.
	2 Reconnect the vacuum hose.
	3 Inspect the brake booster, rubber grommet, and all vacuum plumbing for cracks, holes, damaged connections, or missing clamps.
	4 Pump the brake pedal several times to exhaust the vacuum. Push down on the brake pedal and hold.
	Does the brake pedal move down when the engine is started? **Yes** Vacuum system is OK. **No** GO to G4.
G4: CHECK POWER BRAKE BOOSTER VALVE	
	1 Check the brake booster valve. For additional information, refer to Brake Booster in this section.
	Is the power brake booster valve OK? **Yes** CHECK the brake booster. For additional information, refer to Brake Booster in this section. INSTALL a new brake booster if necessary. TEST the system for normal operation. **No** INSTALL a new brake booster valve. TEST the system for normal operation.

PINPOINT TEST H : BRAKE LOCKUP DURING LIGHT BRAKE PEDAL FORCE	
TEST CONDITIONS	**DETAILS/RESULTS/ACTIONS**
H1: TEST BRAKE LOCKUP	
	1 Road test the vehicle and apply the brake pedal lightly.
	Do the brakes lockup? **Yes** GO to H2. **No** Vehicle is OK.

H2: INSPECT BRAKE PADS	
	1 Inspect brake pads for contamination, correct installation, damage and type.
	Are any concerns found? **Yes** CHECK the front brake pads. For additional information, refer toSection 206-03 Front Disc Brake. CHECK the rear brake pads. For additional information, refer toSection 206-04 Rear Disc Brake. INSTALL new brake pads as necessary. REPEAT road test. **No** GO to H3.
H3: INSPECT BRAKE CALIPERS	
	1 Inspect brake calipers for binding, leaking or sticking.
	Are any concerns found? **Yes** CHECK the front brake calipers. For additional information, refer toSection 206-03 Front Disc Brake. CHECK the rear brake calipers. For additional information, refer toSection 206-04 Rear Disc Brake. INSTALL the brake calipers correctly or INSTALL new brake calipers as necessary. TEST the system for normal operation. REPEAT road test if necessary. **No** Vehicle is OK.

PINPOINT TEST I : BRAKES DRAG	
TEST CONDITIONS	**DETAILS/RESULTS/ACTIONS**
I1: ROAD TEST VEHICLE	
	1 Road test the vehicle and apply the brakes.
	Are the brakes functioning correctly? **Yes** Vehicle is OK. **No** GO to I2.
I2: CHECK CALIPERS	
	1 Check the front caliper pistons for binding, leaking or sticking. For additional information, refer toSection 206-03 Front Disc Brake. Check the rear caliper pistons for binding, leaking or sticking. For additional information, refer toSection 206-04 Rear Disc Brake.
	Do the disc brake caliper pistons and pins bind, leak or stick? **Yes** INSPECT the brake calipers and parking brake cables. INSTALL new components as necessary. Road test vehicle. **No** GO to I3.
I3: CHECK BRAKE BOOSTER	
	1 Check the brake booster connecting rod alignment and travel. For additional information, refer toSection 206-07 Power Brake Actuation.
	Is the connecting rod OK? **Yes** Vehicle is OK. **No** INSTALL a new brake booster. For additional information, refer toSection 206-07 Power Brake Actuation. TEST the system for normal operation.

PINPOINT TEST J : EXCESSIVE/ERRATIC BRAKE PEDAL TRAVEL	
TEST CONDITIONS	**DETAILS/RESULTS/ACTIONS**
J1: TEST ON ROUGH ROAD	
	1 Road test the vehicle on rough road conditions.
	2 Apply the brakes slowly.
	Is the brake pedal effort and brake pedal travel normal? **Yes** Vehicle is OK. **No** GO to J2.
J2: CHECK BRAKE FLUID LEVEL	
	1 Check the brake master cylinder reservoir fluid level.
	Is the fluid level OK? **Yes** GO to J3. **No** CHECK brake master cylinder reservoir sealing points. For additional information, refer to Brake Master Cylinder in this section. ADD brake fluid and BLEED the brake system. For additional information, refer to General Procedures in this section. TEST the system for normal operation. REPEAT road test if necessary.
J3: CHECK BRAKE PEDAL RESERVE	
	1 Engine is idle.
	2 Apply the brake pedal lightly three or four times.
	3 Wait 15 seconds for the vacuum to replenish.
	4 Push down on the brake pedal until it stops moving downward or an increased resistance to the brake pedal travel occurs.
	5 Hold the brake pedal in the applied position while increasing the engine speed to 2000 revs/min.
	6 Release the accelerator pedal.
	Does the brake pedal move downward as the engine speed returns to idle? **Yes** GO to J4. **No** CHECK the vacuum to the brake booster. For additional information, refer toSection 206-07 Power Brake Actuation.
J4: CHECK THE FRONT HUB AND BEARING ASSEMBLY	
	1 Check the front hub and bearing assembly. For additional information, refer toSection 204-01 Front Suspension.

	Are the front wheel bearings loose? **Yes** INSTALL a new front wheel bearing if damaged. For additional information, refer toSection 204-01 Front Suspension. TEST the system for normal operation. **No** CHECK the front brake discs for thickness variances. For additional information, refer to General Procedures in this section.

PINPOINT TEST K : SLOW OR INCOMPLETE BRAKE PEDAL RETURN	
TEST CONDITIONS	**DETAILS/RESULTS/ACTIONS**
K1: CHECK FOR BRAKE PEDAL RETURN	
	1 Run the engine at fast idle while making several brake applications.
	2 Pull the brake pedal rearward with approximately 44.5 N (10lb) force.
	3 Release the brake pedal and measure the distance to the toe board.
	4 Make a hard brake application.
	5 Release the brake pedal and measure the brake pedal to toe board distance. The brake pedal should return to its original position.
	Does the brake pedal return to its original position? **Yes** Vehicle is OK. **No** GO to K2.
K2: CHECK FOR BRAKE PEDAL BINDING	
	1 Check the brake pedal to make sure it is operating freely.
	Is the brake pedal operating freely? **Yes** INSTALL a new brake booster. For additional information, refer toSection 206-07 Power Brake Actuation. TEST the system for normal operation. **No** REPAIR or INSTALL new brake pedal. TEST the system for normal operation.

Component Tests

Brake Booster

1. **1.** Check all hoses and connections. All unused vacuum connectors should be capped. Hoses and their connections should be correctly secured and in good condition with no holes and no collapsed areas. Inspect the valve on the brake booster for damage.
2. **2.** Check the hydraulic brake system for leaks or low fluid.
3. **3.** With the transmission in PARK, stop the engine and apply the parking brake. Pump the brake pedal several times to exhaust all vacuum in the system.
4. **4.** With the engine switched off and all vacuum in the system exhausted, apply the brake pedal and hold it down. Start the engine. If the vacuum system is operating, the brake pedal will tend to move downward under constant foot pressure. If no motion is felt, the vacuum booster system is not functioning.
5. **5.** Remove the vacuum hose from the brake booster. Manifold vacuum should be available at the brake booster end of the hose with the engine at idle speed and the transmission in PARK or NEUTRAL. Make sure that all unused vacuum outlets are correctly capped, hose connectors are correctly secured and vacuum hoses are in good condition. When it is established that manifold vacuum is available to the brake booster, connect the vacuum hose to the brake booster and repeat Step 3. If no downward movement of the brake pedal is felt, install a new brake booster.
6. **6.** Operate the engine for a minimum of 10 seconds at a fast idle. Stop the engine and allow the vehicle to stand for 10 minutes. Then, apply the brake pedal with approximately 89 N (20lb) of force. The pedal feel (brake application) should be the same as that noted with the engine running. If the brake pedal feels hard (no power assist), install a new valve and then repeat the test. If the brake pedal still feels hard, install a new brake booster. If the brake pedal movement feels spongy, bleed the brake system. For additional information, refer to General Procedures in this section.

Brake Master Cylinder

Usually, the first and strongest indicator of anything wrong in the brake system is a feeling through the brake pedal. In diagnosing the condition of the brake master cylinder, check pedal feel as evidence of a brake concern. Check for brake warning lamp illumination and the brake fluid level in the brake master cylinder reservoir.

Normal Conditions

The following conditions are considered normal and are not indications that the brake master cylinder is in need of repair.

- New brake systems are designed to produce a pedal effort that is not as hard as in the past. Complaints of light pedal efforts should be compared to the pedal efforts of another vehicle of the same model and year.
- The fluid level will fall with brake pad wear.

Abnormal Conditions

• NOTE: Prior to carrying out any diagnosis, make sure the brake system warning indicator is functional.

Changes in the brake pedal feel or brake pedal travel are indicators that something could be wrong in the brake system. The diagnostic procedure and techniques use brake pedal feel, warning indicator illumination and low brake fluid level as indicators to diagnosing brake system concerns. The following conditions are considered abnormal and indicate that the brake master cylinder is in need of repair:

- Brake pedal goes down fast. This could be caused by an external or internal leak.
- Brake pedal goes down slowly. This could be caused by an internal or external leak.
- Brake pedal is low or feels spongy. This condition may be caused by no fluid in the brake master cylinder, reservoir cap vent holes clogged or air in the hydraulic system.
- Brake pedal effort is excessive. This may be caused by a bind or obstruction in the pedal/linkage, a faulty non return valve, booster

or insufficient booster vacuum.

- Rear brakes lock up during light pedal force. This may be caused by damaged brake pads, an incorrectly adjusted parking brake, a partially applied parking brake, a damaged ABS sensor or bearing failure.
- Brake pedal effort erratic. This condition could be caused by the brake booster or incorrectly installed brake pads.
- Brake warning indicator is on. This may be caused by low fluid level or float assembly damaged.

Non Pressure Leaks

Any reduced fluid volume in the brake master cylinder reservoir condition may be caused by two types of none pressure external leaks.

Type 1: An external leak may be occur at the master cylinder reservoir cap because of incorrect positioning of gasket and cap. Reposition cap and gasket.

Type 2: An external leak may occur at the reservoir mounting seals. Repair such a leak by installing new seals and make sure that the reservoir retaining bolt is correctly installed.

Published: 11-May-2011

Brake System - General Information - Brake System BleedingVehicles With: Standard Brakes

General Procedures

WARNING: WASH HANDS AFTER HANDLING BRAKE FLUID. IF BRAKE FLUID COMES INTO CONTACT WITH THE EYES, FLUSH EYES WITH COLD RUNNING WATER. IF IRRITATION PERSISTS SEEK MEDICAL ATTENTION. IF BRAKE FLUID IS TAKEN INTERNALLY, DRINK WATER AND INDUCE VOMITING. GET MEDICAL ATTENTION IMMEDIATELY.

CAUTION: Remove brake fluid spillage immediately from paint work with clean water.

1. Position vehicle on a four-post lift.

2. Open engine compartment and fit paint work protection covers to fenders.

3. NOTE: Make sure the brake-fluid level does not fall below the fluid reservoir 'MIN' (minimum) mark when bleeding the brake system.

Fill fluid reservoir to the 'MAX' (maximum) mark.

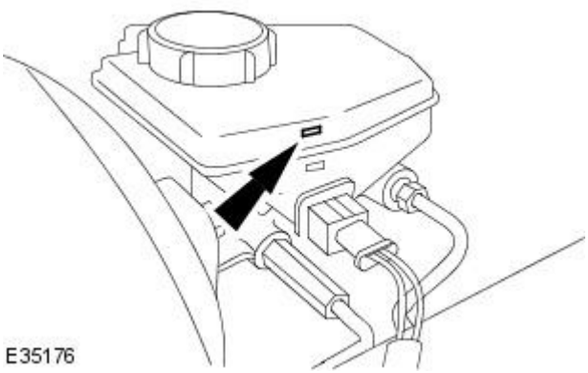

4. Prepare the left-hand front, brake-caliper for bleeding.

- Remove dust cap.
- Connect bleed pipe and fluid container to bleed nipple.

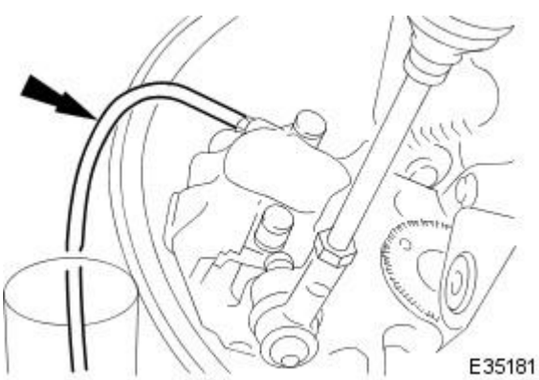

5. Bleed the brake.

1. Apply pressure to brake pedal
2. Open bleed nipple.
3. Fully depress brake pedal.
4. Close bleed nipple.
5. Release brake pedal.
6. Wait two seconds to allow system to prime.
7. Repeat procedure until air-free brake fluid is expelled from the caliper.

6. Tighten bleed nipple to:

- Front caliper bleed nipple: 4-6 Nm.
- Rear caliper bleed nipple: 8-11 Nm.

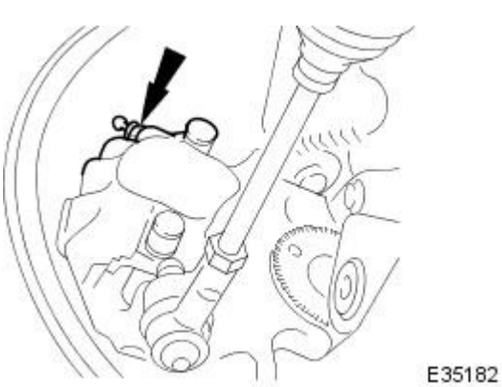

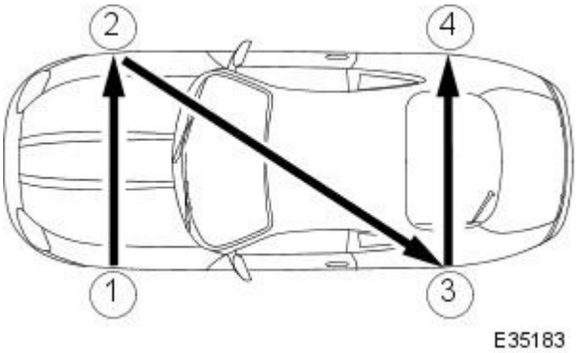

7. Following the procedure above, bleed the brakes in the order shown:

1. Left-Hand Front,
2. Right-Hand Front,
3. Left- Hand Rear,
4. Right-Hand Rear.

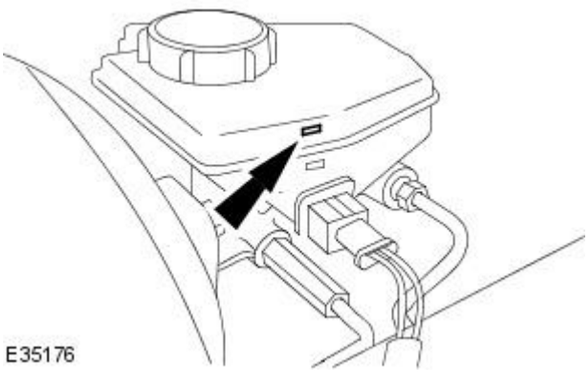

8. CAUTION: Remove brake fluid spillage immediately from paint work with clean water.

Fill fluid reservoir.

- Fill reservoir to the 'MAX' mark.
- Fit filler cap.

9. Start engine.

10. Check for correct brake-pedal travel and pressure.

11. Apply brake pedal and check around vehicle for brake fluid leaks.

12. Make sure brake fluid level is at the 'MAX' mark.

Brake System - General Information - Brake System BleedingVehicles With: High Performance Brakes

General Procedures

1. WARNINGS:

IF BRAKE FLUID IS TAKEN INTERNALLY, DRINK WATER AND INDUCE VOMITING. GET MEDICAL ATTENTION IMMEDIATELY.

WASH HANDS AFTER HANDLING BRAKE FLUID. IF BRAKE FLUID COMES INTO CONTACT WITH THE EYES, FLUSH EYES WITH COLD RUNNING WATER. IF IRRITATION PERSISTS SEEK MEDICAL ATTENTION.

CAUTION: Remove brake fluid spillage immediately from paint work with clean water.

Position vehicle on a four-post lift.

2. Open engine compartment and fit paint work protection covers to fenders.

3. NOTE: Make sure the brake-fluid level does not fall below the fluid reservoir 'MIN' (minimum) mark when bleeding the brake system.

Fill fluid reservoir to the 'MAX' (maximum) mark.

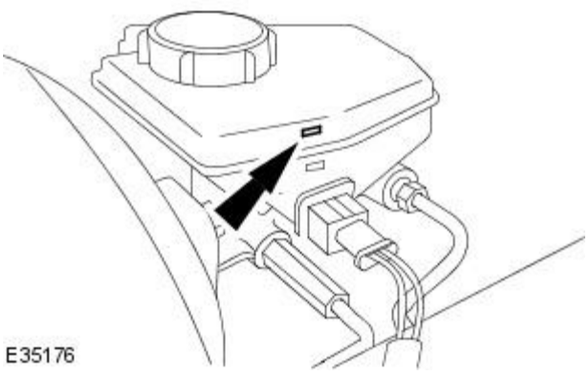

4. Prepare the left-hand front, brake-caliper for bleeding.

- Connect bleed pipes and fluid containers to bleed nipples.

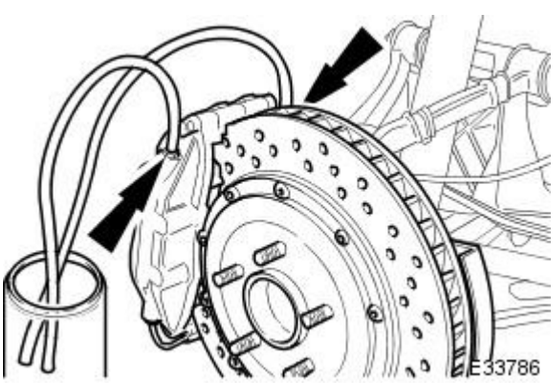

5. Bleed the brake.

1. Apply pressure to brake pedal.
2. Open caliper's outer bleed nipple.
3. Fully depress brake pedal.
4. Close bleed nipple.
5. Release brake pedal.
6. Wait two seconds to allow system to prime.
7. Repeat procedure until air-free brake fluid is expelled from the bleed nipple.
8. Repeat procedure to caliper's inner bleed nipple.

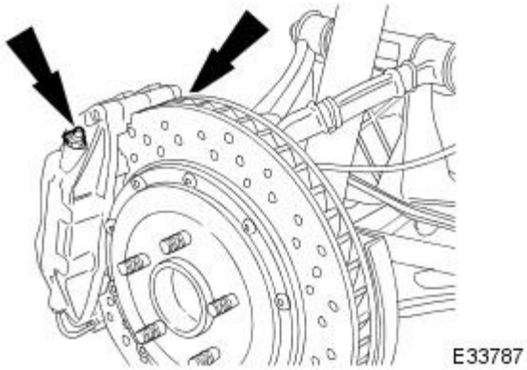

6. Tighten bleed nipples to 12-16 Nm.

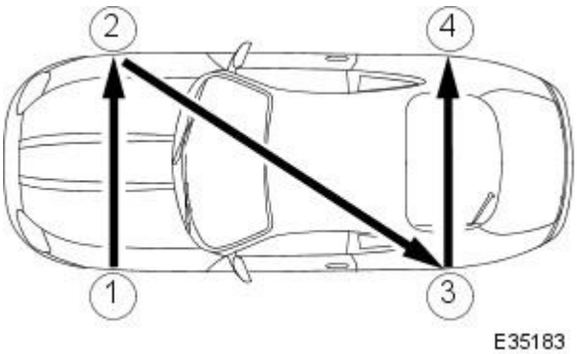

7. Following the procedure above, bleed the brakes in the order shown:

1. Left-Hand Front,
2. Right-Hand Front,
3. Left- Hand Rear,
4. Right-Hand Rear.

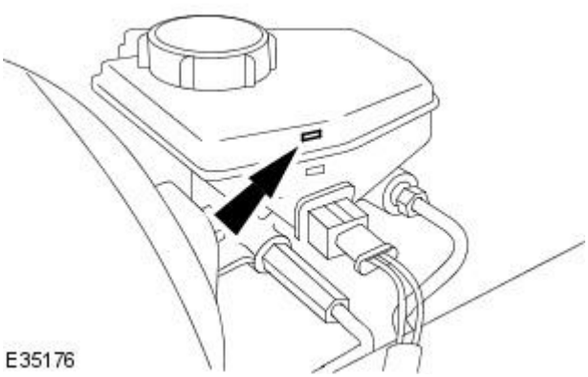

8. CAUTION: Remove brake fluid spillage immediately from paint work with clean water.

Fill fluid reservoir.

- Fill reservoir to the 'MAX' mark.
- Fit filler cap.

9. Start engine.

10. Check for correct brake-pedal travel and pressure.

11. Apply brake pedal and check around vehicle for brake fluid leaks.

12. Make sure brake fluid level is at the 'MAX' mark.

Published: 11-May-2011

Brake System - General Information - Front Brake Disc Runout CheckVehicles With: Standard Brakes

General Procedures

Special Tool(s)	
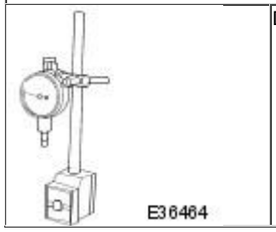 E36464	Dial Test Indicator Gauge and Stand.

1. Raise front of vehicle and support on stands. Refer to section 100-02.

2. Remove wheel.

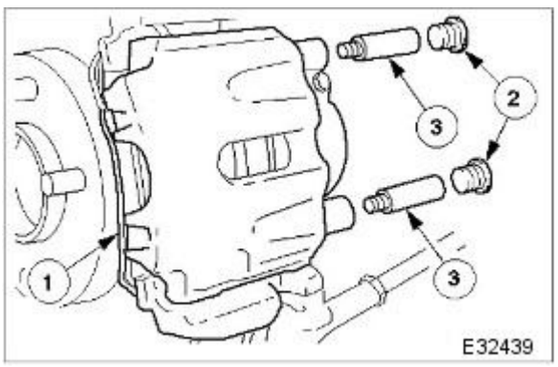

3. CAUTION: Tie caliper housing aside. Do not allow the caliper housing to hang on the hydraulic hose, as this will damage the hose.

Remove caliper housing from caliper carrier.

1. Remove anti-rattle spring.
2. Remove dust covers.
3. Remove guide pins.

- Remove and tie caliper housing aside.

4. Make sure that wheel bearing end-float is correct. Refer to specification section 204-01.

5. Measure brake disc run-out.

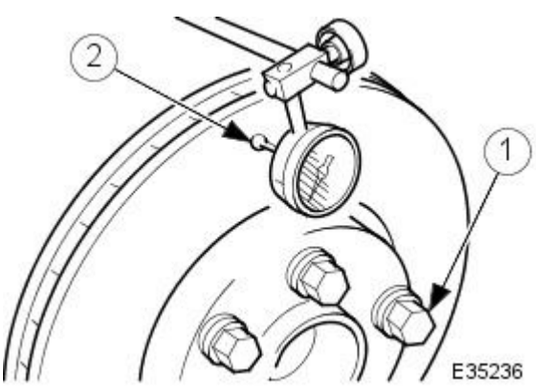

- Install brake disc to hub and secure with all wheel nuts, tighten wheel nuts to 20 Nm in a diagonal sequence.
- Position the gauge so that the pointer contacts the disc, 10 mm from its outer edge.
- Slowly rotate the disc one revolution, the disc run-out must not exceed the specification. Refer to Specification Section 206-03.

6. If the brake disc run-out exceeds specification, reposition the brake disc on the hub and repeat the above procedure. Continue repositioning the brake disc until the run-out is within specification.

7. If the brake disc run-out still exceeds specification, check the hub face run-out.

8. Remove brake disc. Refer to procedure 70.10.12.

9. Measure hub face run-out.

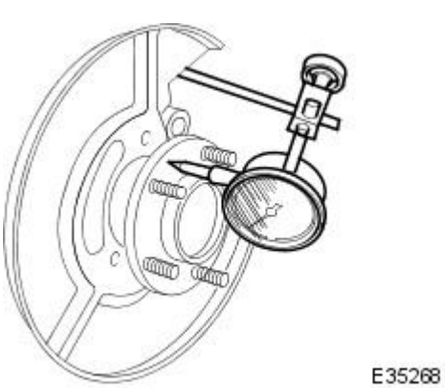

- Position the gauge so that the pointer contacts the hub face.
- Slowly rotate the hub one revolution, the hub run-out must not exceed the specification. Refer to Specification Section 204-01.
- If the hub exceeds the maximum run-out specification replace the hub. Refer to procedure 60.25.01.

10. NOTE: Make sure the brake disc and hub mating surfaces are clean.

If the hub run-out is within specification replace brake discs. Refer to procedure 70.10.12.

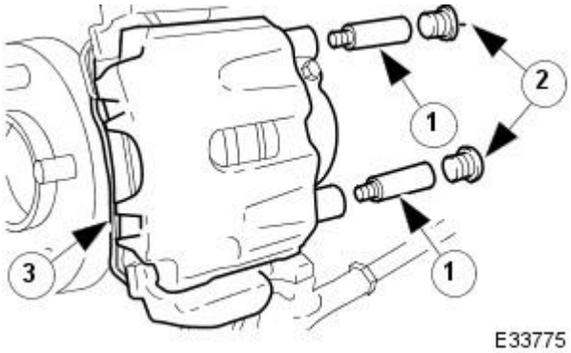

11. Install caliper housing to caliper carrier.

- Align housing to carrier.
  1. Install and tighten guide pins to 25-30 Nm.
  2. Install dust covers.
  3. Install anti-rattle spring.

12. Install wheel. Refer to procedure 74.20.05.

Published: 11-May-2011

Brake System - General Information - Front Brake Disc Runout CheckVehicles With: High Performance Brakes

General Procedures

Special Tool(s)	
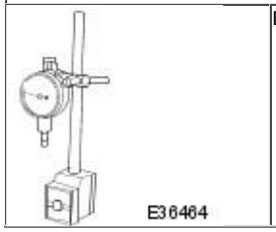 E36464	Dial Test Indicator Gauge and Stand.

1. WARNING: BRAKE DUST, IF INHALED CAN DAMAGE YOUR HEALTH. ALWAYS REMOVE BRAKE DUST USING A VACUUM BRUSH. DO NOT USE A COMPRESSED-AIR LINE TO DISPERSE BRAKE DUST INTO THE ATMOSPHERE.

• CAUTIONS:

Replacement of nuts and bolts: Various thread-locking devices are used on nuts and bolts throughout the vehicle. These devices restrict the number of times a nut or bolt can be used. See section 100-00 for information.

When removing the caliper; remove the bolts that secure the caliper to the vertical link only. DO NOT loosen any other caliper bolts.

Raise front of vehicle and support on stands. Refer to section 100-02.

2. Remove wheel. Refer to section 74.20.05.

3. Remove brake pads from caliper.

1. Remove 'R' clips.
2. Withdraw pins from caliper.
3. Remove anti-rattle spring.
4. Remove brake pads.

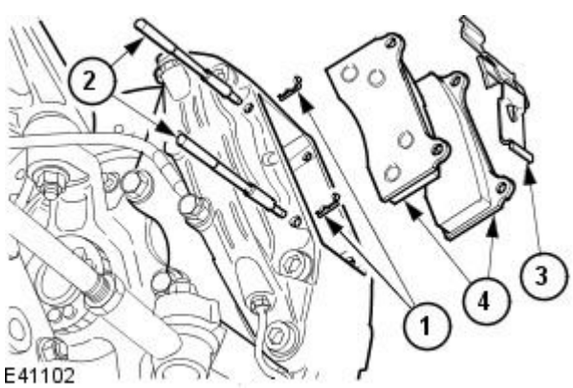

E41102

4. CAUTIONS:

Only remove the bolts securing the caliper to the vertical link. Refer to caution above for more information.

Do not allow the caliper to hang on the hydraulic hose, as this will damage the hose.

Remove caliper from vertical link.

- Remove bolts.
- Remove and tie caliper aside.

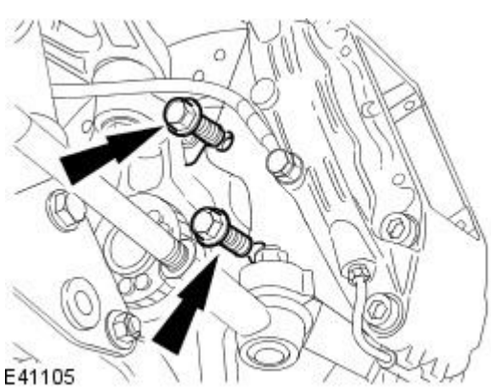
E41105

5. Make sure that wheel bearing end-float is within specification. Refer to specification section 204-01.

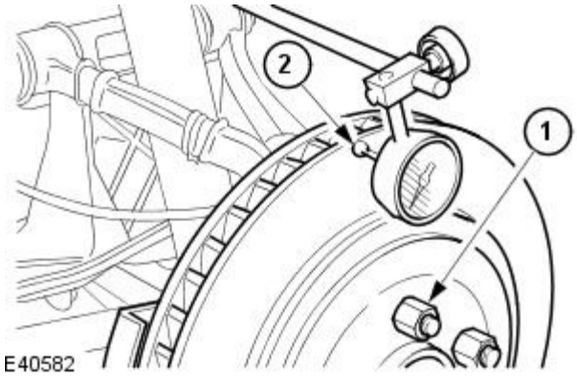

6. Measure brake disc run-out.

1. Install brake disc to hub and secure with all wheel nuts, tighten wheel nuts to 20 Nm in a diagonal sequence.
2. Position the gauge so that the pointer contacts the disc, between the disc's outer drill holes and the disc's outer edge.

- Slowly rotate the disc one revolution, the disc run-out must not exceed the specification. Refer to Specification Section 206-03.

7. If the brake disc run-out exceeds specification, reposition the brake disc on the hub and repeat the above procedure. Continue repositioning the brake disc until the run-out is within specification.

8. If the brake disc run-out still exceeds specification, check the hub face run-out.

9. Remove brake disc.

10. Measure hub face run-out.

- Position the gauge so that the pointer contacts the hub face.
- Slowly rotate the hub one revolution, the hub run-out must not exceed the specification. Refer to Specification Section 204-01.
- If the hub exceeds the maximum run-out specification replace the hub. Refer to procedure 60.25.01.

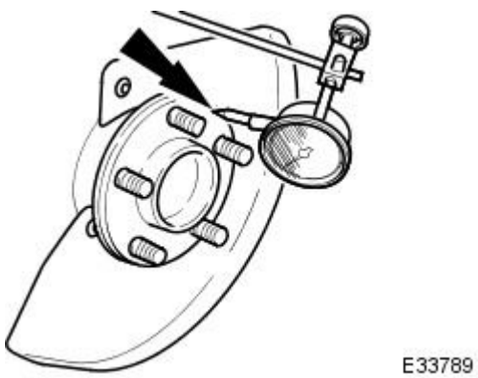

11. NOTE: Make sure the brake disc and hub mating surfaces are clean.

If the hub run-out is within specification replace the brake discs. Refer to procedure 70.10.12.

12. When the disc run-out is within specification, index mark the hub and disc for future installment.

13. CAUTION: Install new brake caliper retaining bolts. Failure to follow this instruction may result in damage to the vehicle.

Install caliper to vertical link.

- Install and tighten bolts to 180 Nm.

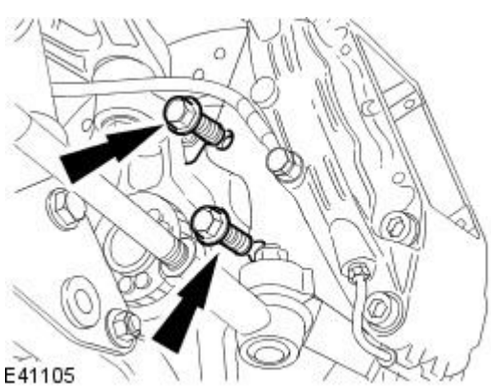

14. CAUTIONS:

Retracting the caliper piston may cause the fluid reservoir to over-flow. Remove brake fluid spillage immediately from paint work, with clean water.

Make sure the brake pads are installed to the correct orientation.

Note the condition of pins and 'R' clips and replace if necessary.

• NOTE: Slowly retract caliper pistons.

Install brake pads into caliper housing.

1. Install pads.
2. Position anti-rattle spring.
3. Install pins.
4. Install 'R' clips.

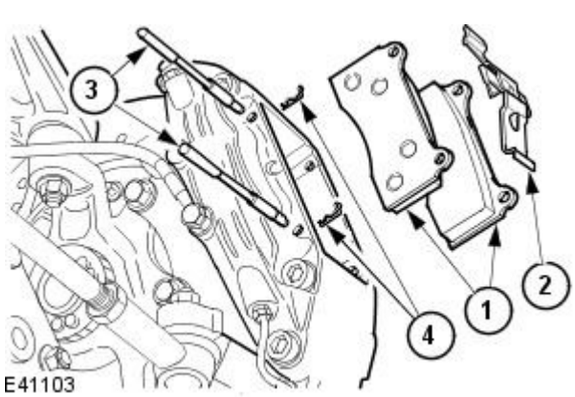

15. Install wheels. Refer to operation 74.20.05.

Brake System - General Information - Rear Brake Disc Runout CheckVehicles With: Standard Brakes

General Procedures

Special Tool(s)	
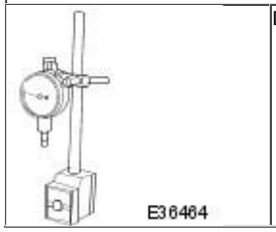 E36464	Dial Test Indicator Gauge and Stand.

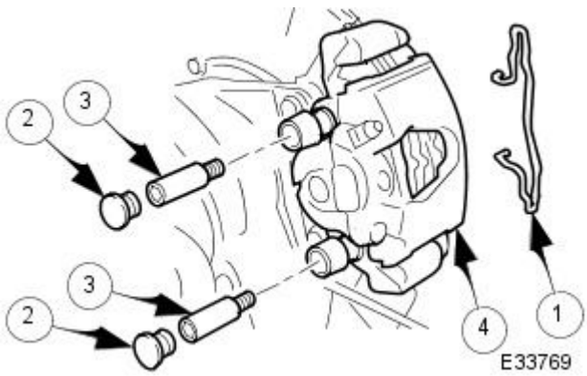

1. Raise rear of vehicle and support on stands. Refer to section 100-02.

2. Remove wheel.

3. CAUTION: Tie caliper housing aside. Do not allow the caliper housing to hang on the hydraulic hose, as this will damage the hose.

Remove caliper housing from caliper carrier.

1. Remove anti-rattle spring.
2. Remove dust covers.
3. Remove guide pins.
4. Remove housing from carrier.

- Tie caliper housing aside.

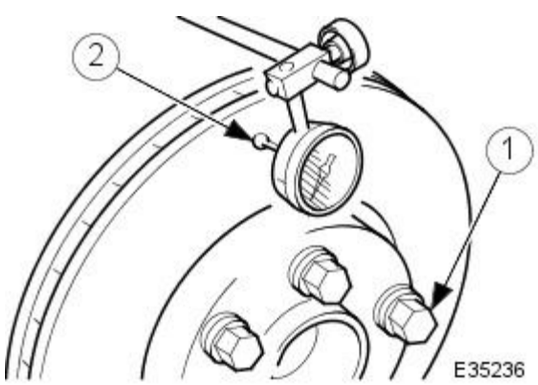

4. NOTE: Measurement of the brake disc run-out, must be carried-out with the disc and hub parking-brake adjuster-holes aligned.

Make sure that wheel bearing end-float is correct. Refer to specification section 204-02.

5. Measure brake disc run-out.

- Install brake disc to hub and secure with all wheel nuts, tighten wheel nuts to 20 Nm in a diagonal sequence.
- Position the gauge so that the pointer contacts the disc 10 mm from its outer edge.
- Slowly rotate the disc one revolution, the disc run-out must not exceed the specification. Refer to specifications in section 206-04.

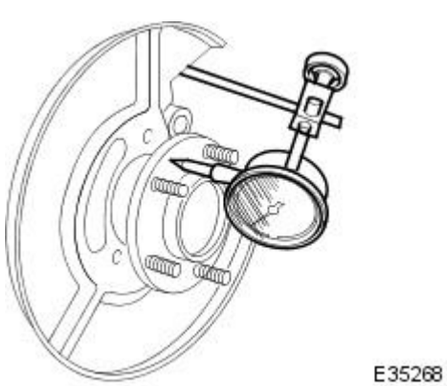

6. If the brake disc run-out exceeds specification, check the hub face run-out.

7. Remove brake discs. Refer to procedure 70.10.13.

8. Measure hub face run-out.

- Position the gauge so that the pointer contacts the hub face.
- Slowly rotate the hub one revolution, the hub run-out must not exceed the specification. Refer to Specification Section 204-01.
- If the hub exceeds the maximum run-out specification replace the hub. Refer to Section 204-01.

9. NOTE: Make sure the brake disc and hub mating surfaces are clean.

If the hub run-out is within specification replace brake discs. Refer to procedure 70.10.13.

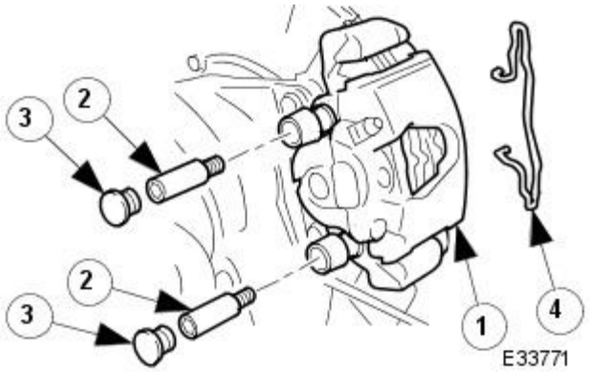

10. Install caliper housing to caliper carrier.

1. Align housing to carrier.
2. Install and tighten guide pins to 25-30 Nm.
3. Install dust covers.
4. Install anti-rattle spring.

11. Fit wheel. Refer to section 204-04.

Published: 11-May-2011

Brake System - General Information - Rear Brake Disc Runout CheckVehicles With: High Performance Brakes

General Procedures

Special Tool(s)	
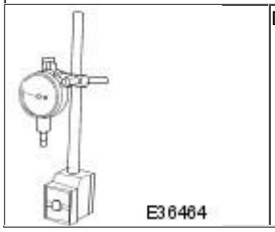 E36464	Dial Test Indicator Gauge and Stand.

1. WARNING: BRAKE DUST, IF INHALED CAN DAMAGE YOUR HEALTH. ALWAYS REMOVE BRAKE DUST USING A VACUUM BRUSH. DO NOT USE A COMPRESSED-AIR LINE TO DISPERSE BRAKE DUST INTO THE ATMOSPHERE.

• CAUTIONS:

Replacement of nuts and bolts: Various thread-locking devices are used on nuts and bolts throughout the vehicle. These devices restrict the number of times a nut or bolt can be used. See section 100-00 for information.

When removing the caliper; remove the bolts that secure the caliper to the hub carrier only. DO NOT loosen any other caliper bolts.

Raise rear of vehicle and support on stands. Refer to section 100-02.

2. Remove wheel. Refer to operation 74.20.05.

3. Remove brake pads from caliper.

1. Withdraw pins from caliper.
2. Remove anti-rattle spring.
3. Remove brake pads.

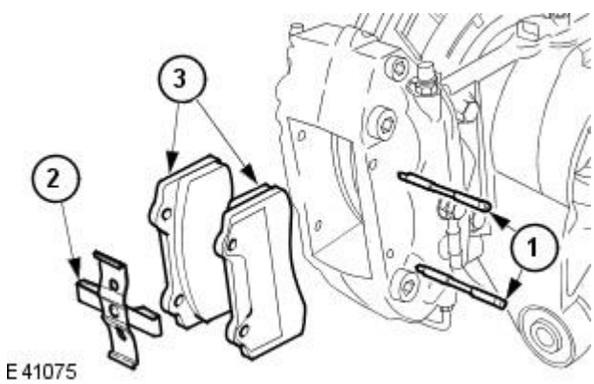

E41075

4. CAUTIONS:

Only remove the bolts securing the caliper to the hub carrier. Refer to caution above for more information.

Do not allow the caliper to hang on the hydraulic hose, as this will damage the hose.

Remove caliper from hub carrier.

- Remove bolts.
- Remove and tie caliper aside.

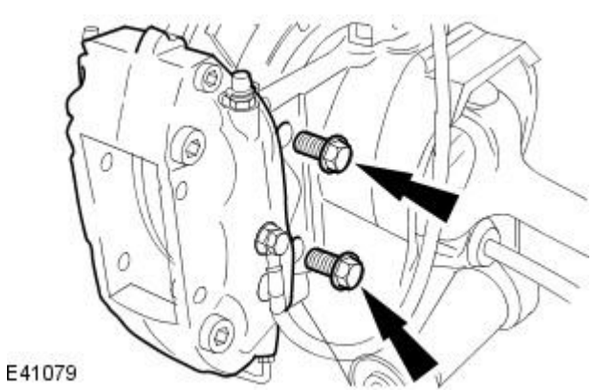
E41079

5. Make sure that wheel bearing end-float is within specification. Refer to specification section 204-02.

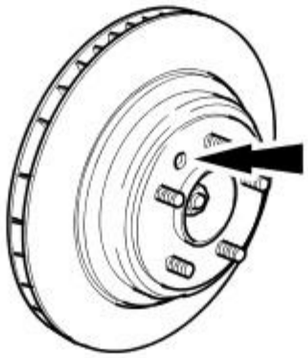

E41083

6. NOTE: Measurement of the brake disc run-out, must be carried-out with the disc and hub access holes aligned.

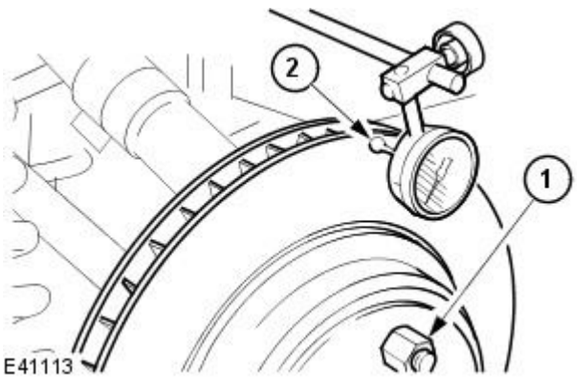

E41113

7. Measure brake disc run-out.

1. Install brake disc to hub and secure with all wheel nuts, tighten wheel nuts to 20 Nm in a diagonal sequence.
2. Position the gauge so that the pointer contacts the disc, between the disc's outer drill holes and the disc's outer edge.

- Slowly rotate the disc one revolution, the disc run-out must not exceed the specification. Refer to specifications in section 206-04.

8. If the brake disc run-out exceeds specification, check the hub face run-out.

9. Remove brake discs. Refer to procedure 70.10.13.

10. Measure hub face run-out.

- Position the gauge so that the pointer contacts the hub face.
- Slowly rotate the hub one revolution, the hub run-out must not exceed the specification. Refer to Specification Section 204-02.
- If the hub exceeds the maximum run-out specification replace the hub. Refer to operation 64.15.14.

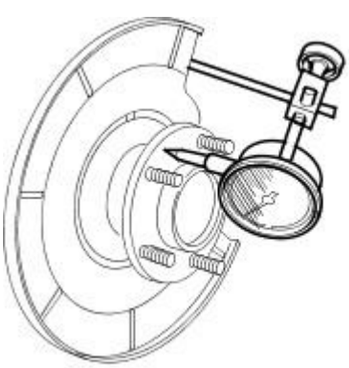

E33814

11. If the hub run-out is within specification replace brake discs. Refer to procedure 70.10.13.

12. CAUTION: Install new brake caliper retaining bolts. Failure to follow this instruction may result in damage to the vehicle.

Install caliper to hub carrier.

- Install and tighten bolts to 60 Nm.

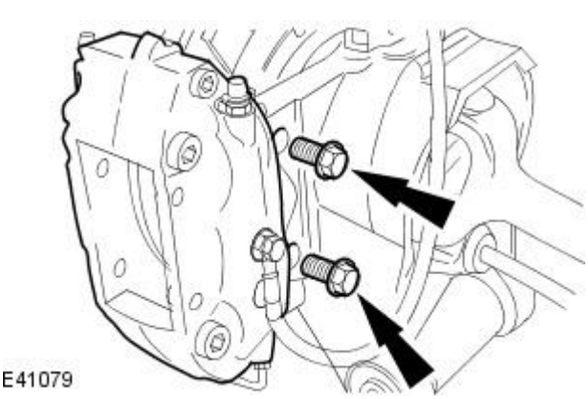

E41079

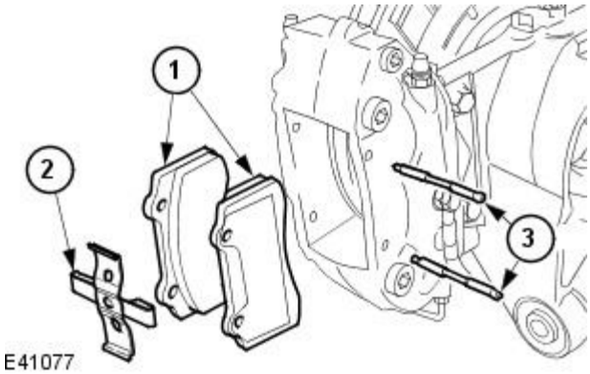

13. CAUTIONS:

Retracting the caliper piston may cause the fluid reservoir to over-flow. Remove brake fluid spillage immediately from paint work with clean water.

Make sure the brake pads are installed to the correct orientation.

Note condition of pins and replace if necessary.

• NOTE: Slowly retract caliper pistons.

Install brake pads to caliper.

1. Install pads.
2. Position anti-rattle spring.
3. Install pins - make sure pin collets are fully engaged into caliper.

14. Fit wheel. Refer to section 204-04.

Front Disc Brake -

Lubricants, Fluids, Sealants and Adhesives

CAUTION: Do not use brake fluid ITT Super Dot 4 on 2006my vehicles onwards. Failure to follow this instruction may result in damage to the vehicle.

• NOTE: Brake fluid ITT Super Dot 4 has now been superseded by Shell ESL Super Dot 4 which is the Jaguar recommended brake fluid. Shell ESL Super Dot 4 can be used on all model years.

Unit	Specification
Brake fluid	ITT Super Dot 4
Brake fluid	Shell ESL Super Dot 4

Torques - Vehicles with: Brembo Brakes

Component	Nm
Brake Caliper retaining bolts	180
Bleed nipple	12-16
Union bolt - hose to caliper	22-26

Torques - Vehicles without: Brembo Brakes

Component	Nm
Brake Caliper retaining bolts	140
Guide Pin - caliper housing to caliper carrier	25-30
Bleed nipple	4-6
Hose to front caliper - without seal	8-11
Hose to front caliper - with seal	10-15
Union Bolt - brake hose to caliper	30-40

Brake Tube, Hoses and Bracket Torques

CAUTION: Replacement of nuts and bolts: Various thread-locking devices are used on nuts and bolts throughout the vehicle. These devices restrict the number of times a nut or bolt can be used. See section 100-00 for information.

Component	Nm
M10 hose locknut	15-20
M10 brake tube female-nut	13-17
M10 brake tube male-nut	13-17
M12 brake tube male-nut	15-20
Bolt - 3-way tube connector to body	9-12

Front Disc Brake - Front Disc Brake

Description and Operation

Components

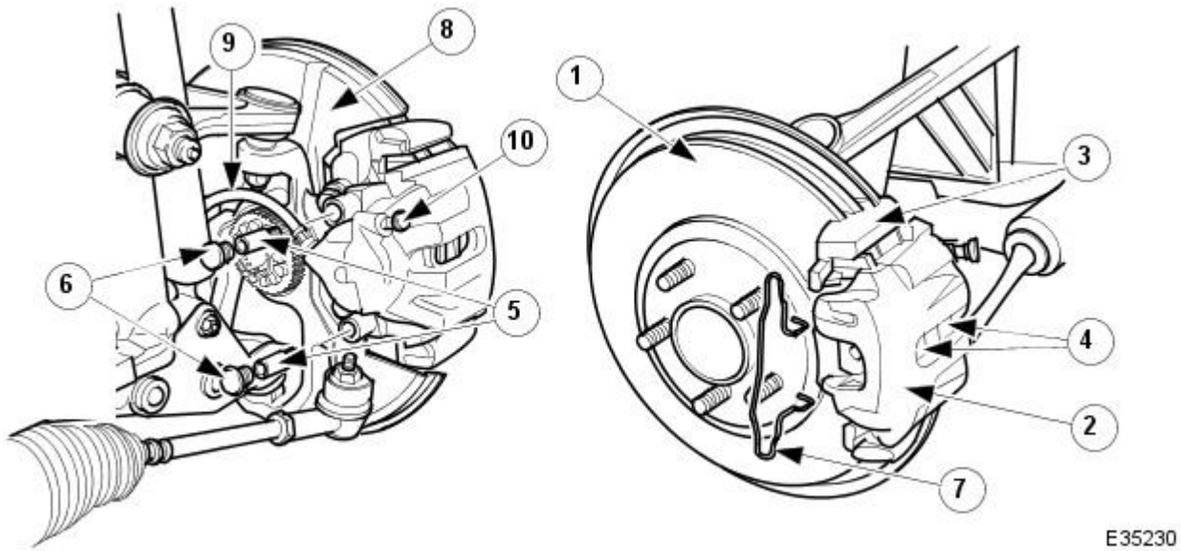

Item	Part Number	Description
1	—	Brake Disc
2	—	Caliper Housing
3	—	Caliper Carrier
4	—	Brake Pads
5	—	Guide Pins
6	—	Dust Covers
7	—	Anti-rattle Spring
8	—	Disc Shield
9	—	Brake Hose
10	—	Bleed Nipple

Description and Operation

The brake disc is mounted on the wheel studs and is clamped between the wheel and hub. Cooling ducts run through the center of the brake disc to provide the required ventilation to keep the disc cool under operating conditions.

The caliper carrier, which is secured to the vertical link by two bolts, carries the single-piston caliper housing. The caliper housing is secured to the caliper carrier by two guide-pins and an anti-rattle spring. When the brakes are applied the caliper-housing piston pushes the brake pad in front of it, towards the brake disc. This movement forces the caliper housing to move along the guide-pins, in the opposite direction of the piston, to apply the second brake pad. The brake disc is therefore gripped between the two pads. As brake pressure is increased the grip on the brake disc is increased to slow-down the rotation of the road wheel.

The disc brakes require no adjustment.

Brembo Disc Brakes

Components (Brembo)

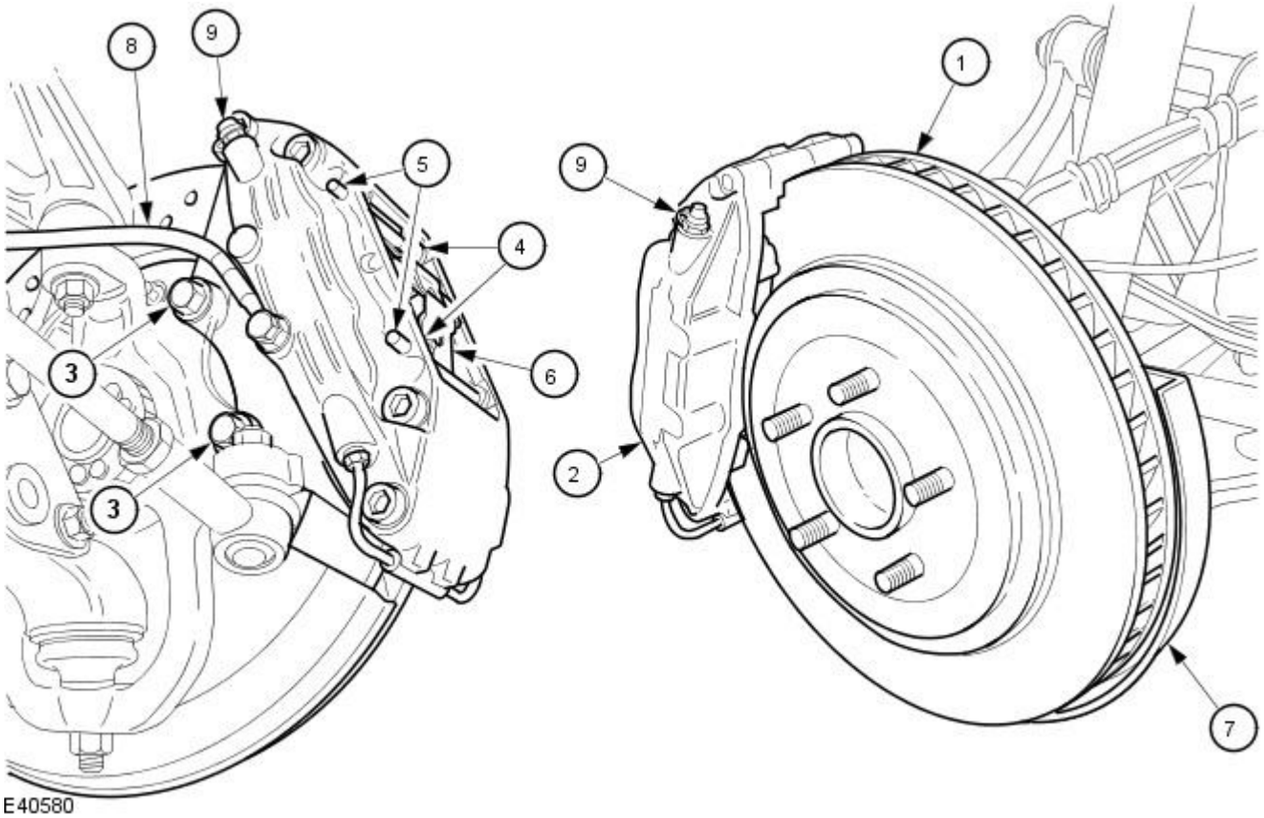

Item	Part Number	Description
1	—	Brake Disc
2	—	Caliper
3	—	Caliper retaining bolt
4	—	Brake Pads
5	—	Guide Pins
6	—	Anti-rattle Spring
7	—	Disc Shield
8	—	Brake Hose
9	—	Bleed Nipples

Description and Operation (Brembo)

CAUTION: When removing the caliper; remove the bolts that secure the caliper to the vertical link only. DO NOT loosen any other caliper bolts.

Brembo calipers and discs provide higher-performance braking using the existing hydraulic braking system. The brakes are installed to the vehicle using unique vertical links, hubs, hydraulic hoses and disc shields.

The front brake disc consists of a ventilated disc, with the option of a cross drilled brake disc. The disc assembly is mounted on the wheel studs and clamped between the wheel and hub.

Due to the use of fixed calipers in place of the standard floating caliper, certain lateral dimensions on the vertical link and hub are critical to achieve correct clearance and operation of the brakes. Therefore special vertical links and hubs set within a certain tolerance are installed with Brembo brakes.

Modified disc shields are installed to accommodate the larger diameter discs.

The four cylinder brake caliper is rigidly attached to the vertical link. The caliper is a split assembly with each side of the caliper, housing two pistons. The two-pairs of opposed pistons act directly on the brake pads mounted one each side of the disc.

Stainless steel hydraulic hoses connect the calipers to the existing brake tubes. It is important that these hoses are aligned correctly when installed to prevent them fouling on the steering and suspension components. Refer to operation 70.55.24 for information.

The Brembo disc brakes require no adjustment.

Front Disc Brake - Brake CaliperVehicles With: Standard Brakes

Removal and Installation

Special Tool(s)	
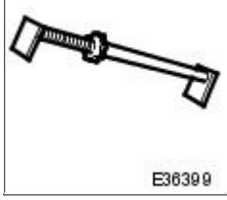 E36399	Brake Pedal Hold Tool JDS 9013

Removal

WARNING: BRAKE DUST, IF INHALED CAN DAMAGE YOUR HEALTH. ALWAYS REMOVE BRAKE DUST USING A VACUUM BRUSH. DO NOT USE A COMPRESSED-AIR LINE TO DISPERSE BRAKE DUST INTO THE ATMOSPHERE.

• CAUTIONS:

Replacement of nuts and bolts: Various thread-locking devices are used on nuts and bolts throughout the vehicle. These devices restrict the number of times a nut or bolt can be used. See section 100-00 for information.

Remove brake fluid spillage immediately from paint work, with clean water.

A new brake hose must be installed when replacing a front brake caliper.

The brake pad adhesive backing must not be reused, therefore always install new brake pads, irrespective of the condition of the original pads when replacing a brake caliper. Always replace brake pads as an axle set.

1. Open engine compartment and fit paint work protection covers to fenders.
2. Raise vehicle on a four-post lift.
3. Raise front of vehicle and support on stands. Refer to Section 100-02.
4. Remove front wheels. See Section 204-04.
5. NOTE: The following three pictorial procedures must be carried-out to minimize brake fluid loss when disconnecting the brake hose.

   Open Left-Hand-Front and Left-Hand-Rear caliper bleed nipples.

   - Connect a bleed tube and container to the calipers.
   - Open bleed nipples.

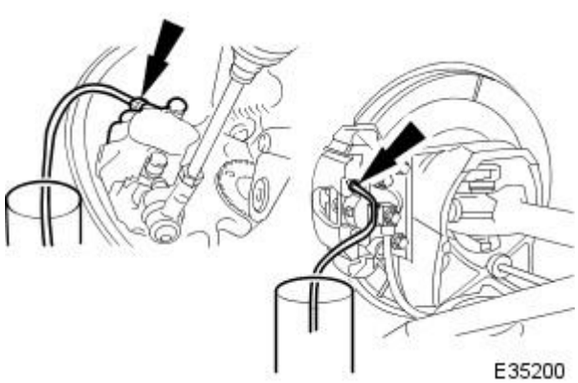

6. Depress and hold down brake pedal at the specified measurement using the special tool.
   1. Position tool between brake pedal and seat frame.
   2. Turn the tool wheel until the brake pedal is held 60mm down from its released position.

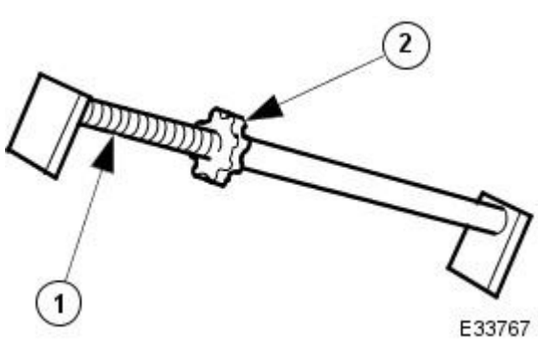

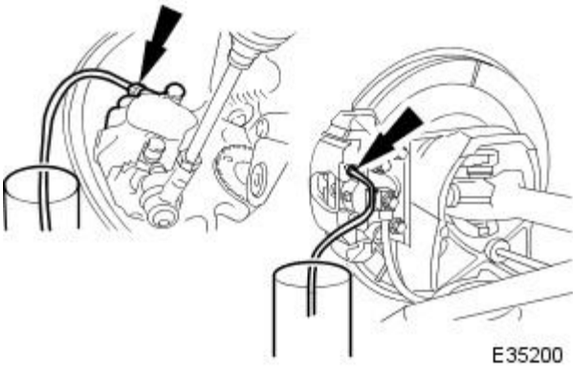

7. Close bleed nipples on both calipers.

- Remove bleed tubes and containers.
- Tighten front bleed nipple to 4-6 Nm.
- Tighten rear bleed nipple to 8-11 Nm.

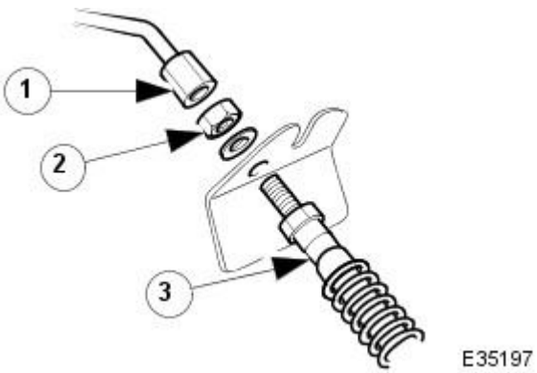

8. CAUTION: A new brake hose must be installed when replacing a front brake caliper.

Disconnect brake hose from brake tube.

1. Unscrew brake tube union nut.
2. Remove nut from hose.
3. Remove hose from bracket.

- Fit plug to brake tube.

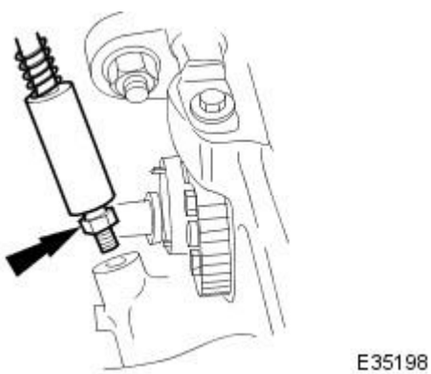

9. Remove brake hose from caliper.

- Unscrew brake hose.
- Fit plugs to caliper port.
- Discard brake hose.

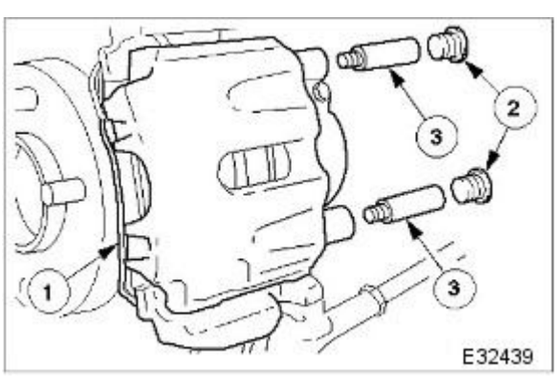

10. Remove caliper housing from caliper carrier.

1. Remove anti-rattle spring.
2. Remove dust covers.
3. Remove guide pins.

- Remove housing from carrier.

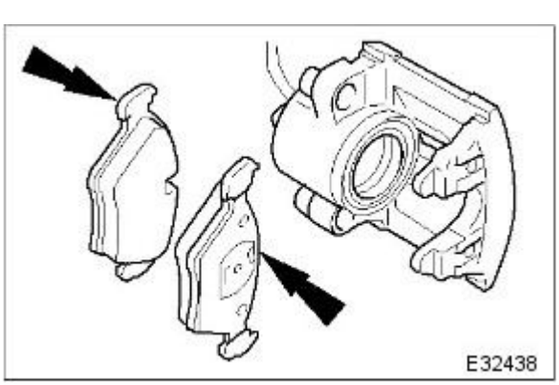

11. NOTE: The inner brake pad is fitted with a clip which secures the pad into the caliper piston.

Remove and discard brake pads. (See Caution above).

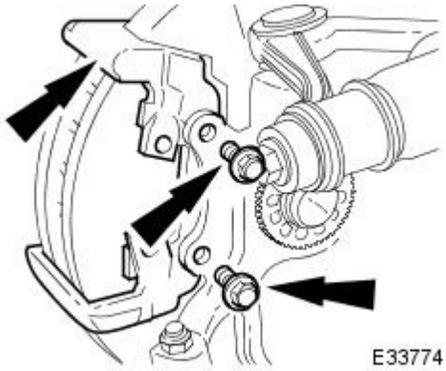

12. Remove brake carrier from vertical link.

- Remove bolts.
- Remove carrier.

13. Remove brake dust and clean caliper mating surfaces. See Warning above.

Installation

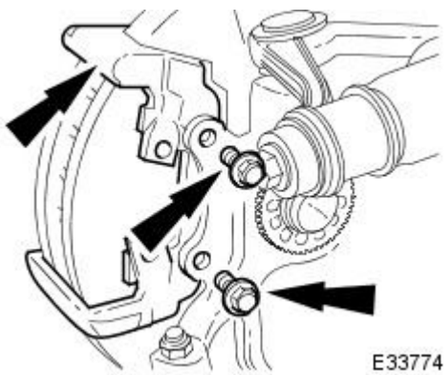

1. Install caliper carrier to vertical link.

- Align carrier to vertical link .
- Install and tighten bolts to 140 Nm.

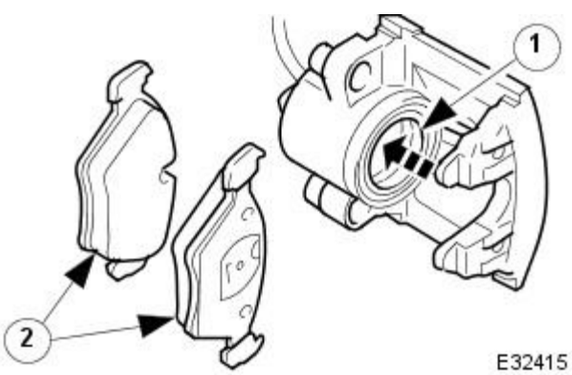

2. Install brake pads into caliper housing. (See Caution above).

1. Remove plug from port and slowly retract piston into caliper housing.
2. Remove paper backing from pads to reveal adhesive shim. Install brake pads, insert clip located on back of inner pad into caliper piston.

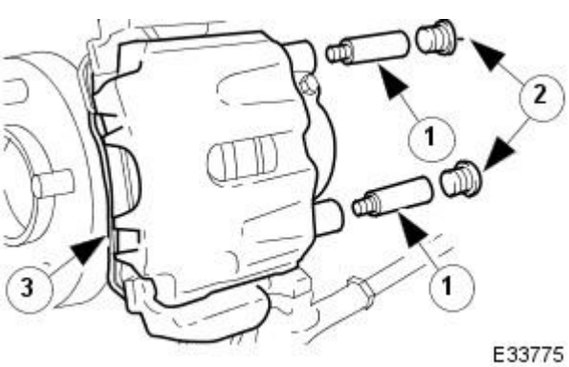

3. Install caliper housing to caliper carrier.

- Align housing to carrier.
  1. Install and tighten guide pins to 25-30 Nm.
  2. Install dust covers.
  3. Install anti-rattle spring.

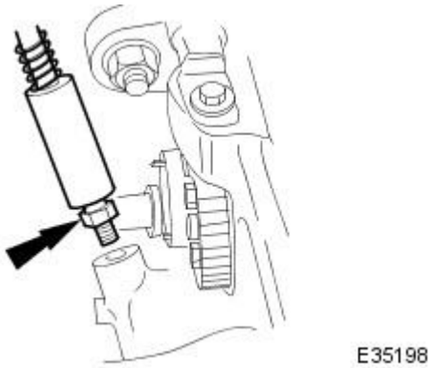

4. NOTE: The brake hose must only be installed with the vehicle's body supported and the suspension hanging in the straight ahead position.

Install and tighten brake hose to caliper housing to 10-14 Nm.

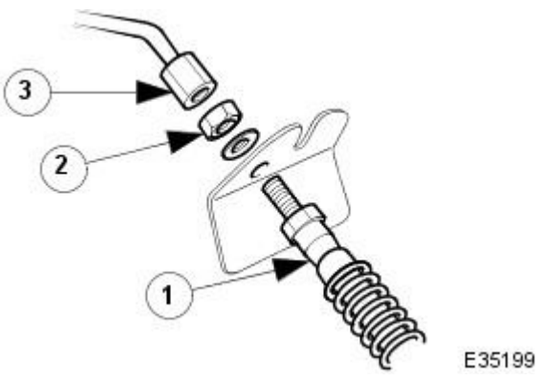

5. NOTE: Make sure the brake hose does not twist when tightening the hose lock-nut.

Connect brake hose to brake tube.

1. Position hose thread through bracket.
2. Install and tighten locking nut to 15-20 Nm.
3. Install and tighten brake-tube union nut. Refer to Specifications, section 206-03.

6. Remove special tool from brake pedal.

7. Fit wheels. Refer to section 204-04.

8. NOTE: Make sure the brake hose is routed correctly.

Remove stands and lower vehicle. Refer to section 100-02.

9. Bleed brake hydraulic system. See operation 70.25.03.

Front Disc Brake - Brake CaliperVehicles With: High Performance Brakes

Removal and Installation

Special Tool(s)	
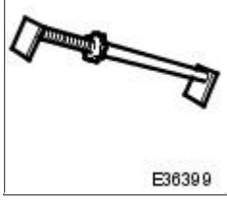 E36399	Brake Pedal Hold Tool JDS 9013

Removal

1. WARNING: BRAKE DUST, IF INHALED CAN DAMAGE YOUR HEALTH. ALWAYS REMOVE BRAKE DUST USING A VACUUM BRUSH. DO NOT USE A COMPRESSED-AIR LINE TO DISPERSE BRAKE DUST INTO THE ATMOSPHERE.

• CAUTIONS:

Replacement of nuts and bolts: Various thread-locking devices are used on nuts and bolts throughout the vehicle. These devices restrict the number of times a nut or bolt can be used. See section 100-00 for information.

Remove brake fluid spillage immediately from paint work, with clean water.

When removing the caliper; remove the bolts that secure the caliper to the vertical link only. DO NOT loosen any other caliper bolts.

Open engine compartment and fit paint work protection covers to fenders.

2. Raise vehicle on a four-post lift.

3. Raise front of vehicle and support on stands. Refer to Section 100-02.

4. Remove front wheels. Refer to operation 74.20.05.

5. NOTE: The following three pictorial procedures must be carried-out to minimize brake fluid loss when disconnecting the brake hose.

Open Left-Hand-Front and Left-Hand-Rear caliper bleed nipples.

- Connect a bleed tube and container to the calipers.
- Open bleed nipples.

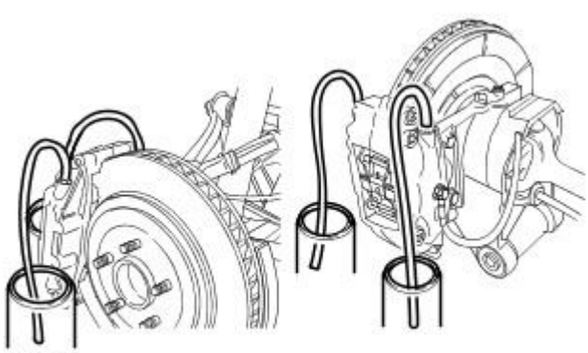

E41088

6. Depress and hold down brake pedal at the specified measurement using the special tool.

1. Position tool between brake pedal and seat frame.
2. Turn the tool wheel until the brake pedal is held 60mm down from its released position.

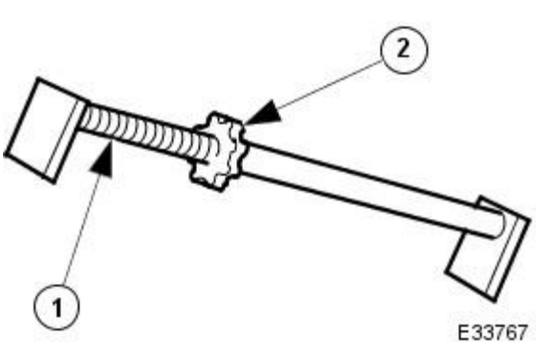

E33767

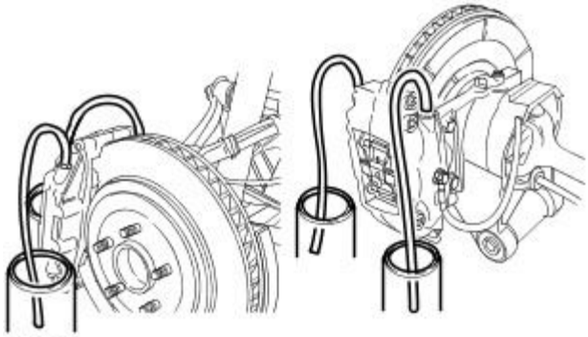

E41088

7. Close bleed nipples on both calipers.

- Tighten bleed nipples to 12-16 Nm.
- Remove bleed tubes and containers.

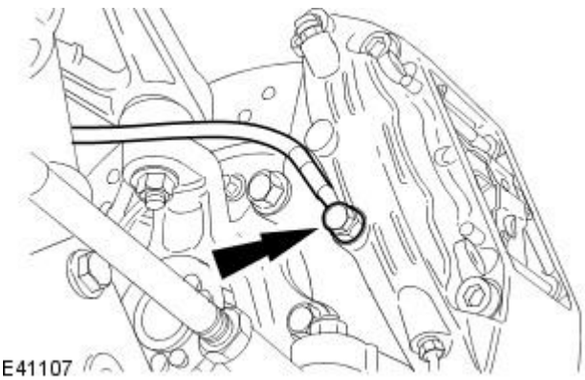

E41107

8. Release brake hose from caliper.

- Remove union bolt.
- Remove and discard sealing washers.
- Install plugs into caliper and hose.

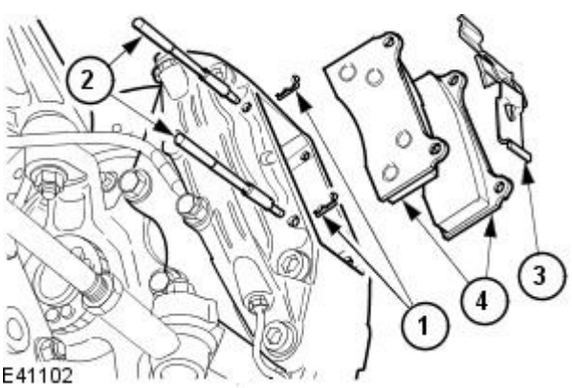

E41102

9. Remove brake pads from caliper.

1. Remove 'R' clips.
2. Withdraw pins from caliper.
3. Remove anti-rattle spring.
4. Remove the brake pads.

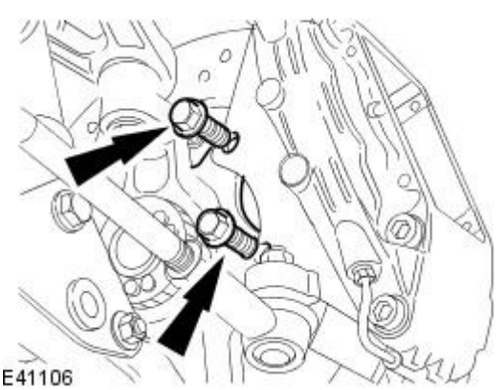

E41106

10. CAUTION: Only remove the bolts securing the caliper to the vertical link. Refer to caution above for more information.

Remove caliper from vertical link.

- Remove bolts.

11. Remove brake dust and clean mating surfaces. See Warning above.

Installation

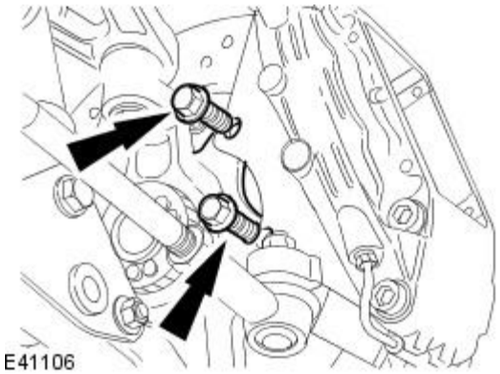

1. CAUTION: Install new brake caliper retaining bolts. Failure to follow this instruction may result in damage to the vehicle.

Install caliper to vertical link.

- Install and tighten bolts to 180 Nm.

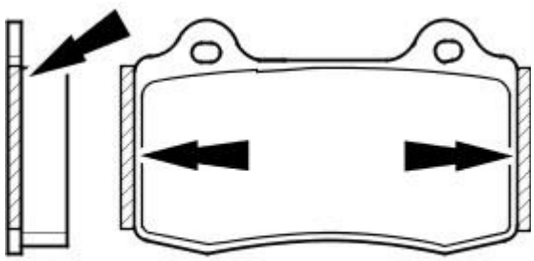

2. CAUTION: Make sure grease does not contact brake-pad friction surface or brake disc.

To prevent brake squeal apply grease to the shoulders of the brake-pad backplate.

- Refer to Specification section 206-04 for grease type.
- Apply a uniform layer of grease to backplate shoulders, making sure the whole shoulder is covered.

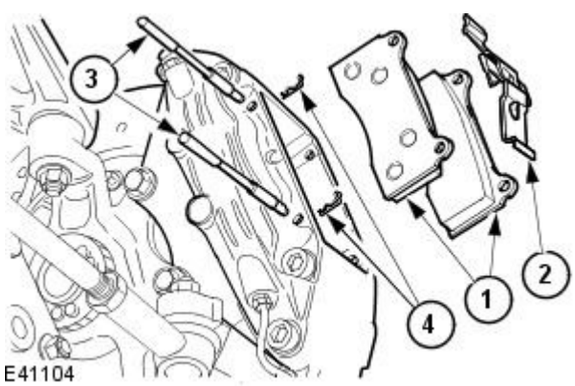

3. CAUTIONS:

Retracting the caliper piston may cause the fluid reservoir to over-flow. Remove brake fluid spillage immediately from paint work, with clean water.

Make sure the brake pads are installed to the correct orientation.

Note the condition of pins and 'R' clips and replace if necessary.

• NOTE: Slowly retract caliper pistons.

Install brake pads into caliper housing.

1. Install pads.
2. Position anti-rattle spring.
3. Install pins.
4. Install 'R' clips.

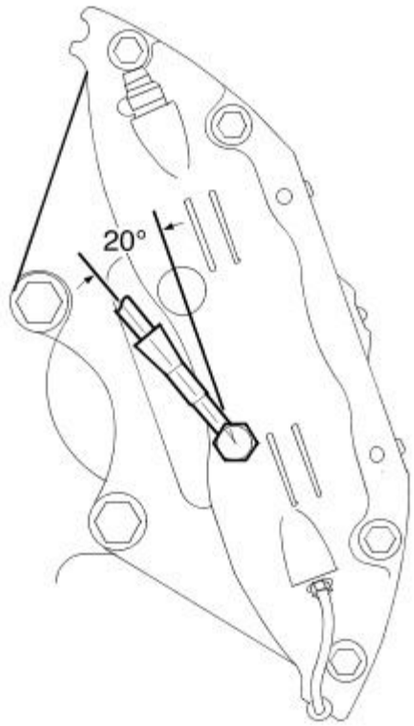

4. CAUTIONS:

The brake hose must only be installed with the vehicle's body supported and the suspension hanging.

It is important that the brake hose is aligned correctly when installed to prevent it fouling on the steering and suspension components.

After installation the brake hose must be aligned 20 degrees from the center line as shown.

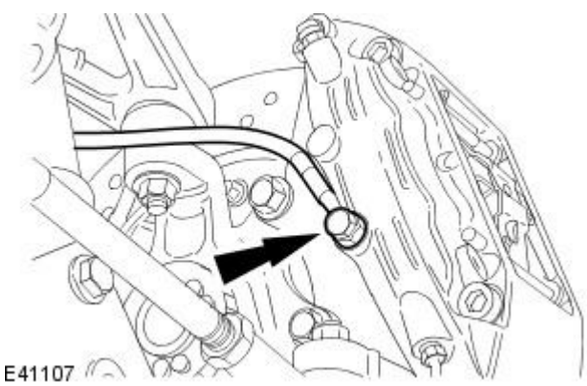

5. Install brake hose to caliper.

- Remove plugs from caliper and hose.
- Install new sealing washers.
- Align hose as shown above.
- Install and tighten union bolt to 22-26 Nm.

6. Remove special tool from brake pedal.

7. Fit wheels. Refer to operation 74.20.05.

8. NOTE: Make sure the brake hose is routed correctly.

Remove stands and lower vehicle. Refer to section 100-02.

9. Bleed brake hydraulic system. See operation 70.25.06.

Front Disc Brake - Brake DiscVehicles With: Standard Brakes

Removal and Installation

Removal

• WARNINGS:

BRAKE DISCS MUST ALWAYS BE REPLACED IN PAIRS.

BRAKE DUST, IF INHALED CAN DAMAGE YOUR HEALTH. ALWAYS REMOVE BRAKE DUST USING A VACUUM BRUSH. DO NOT USE A COMPRESSED-AIR LINE TO DISPERSE BRAKE DUST INTO THE ATMOSPHERE.

CAUTION: Replacement of nuts and bolts: Various thread-locking devices are used on nuts and bolts throughout the vehicle. These devices restrict the number of times a nut or bolt can be used. See section 100-00 for information.

1. Open engine compartment and install paint work protection covers to fenders.

2. Raise front of vehicle and support on stands. See Section 100-02.

3. Remove front wheels. Refer to Section 204-04.

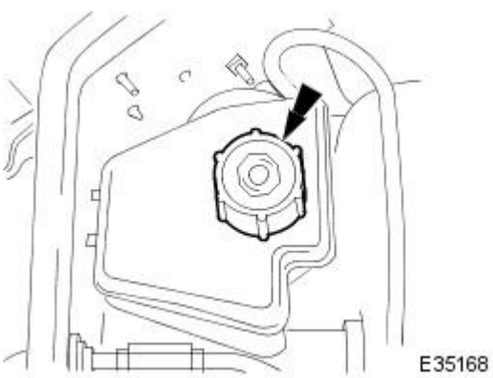

4. CAUTION: Remove brake fluid spillage immediately from paint work, with clean water.

Loosen brake fluid reservoir-cap.

- Position a cloth around the reservoir to collect any fluid spillage.

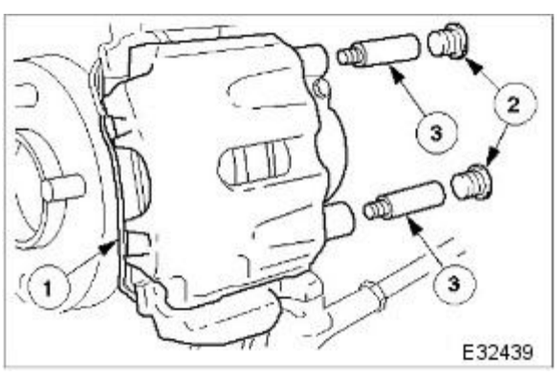

5. CAUTION: Tie caliper housing aside. Do not allow the caliper housing to hang on the hydraulic hose, as this will damage the hose.

Remove caliper housing from caliper carrier.

1. Remove anti-rattle spring.
2. Remove dust covers.
3. Remove guide pins.

- Remove and tie caliper housing aside.

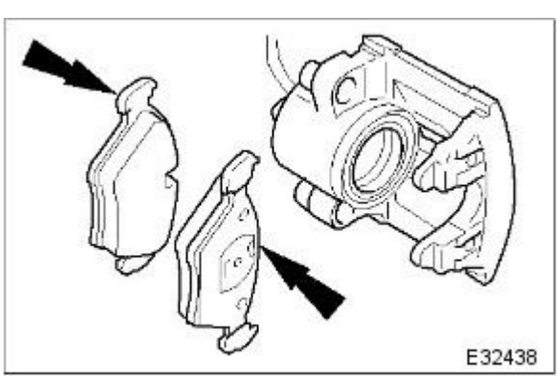

6. CAUTION: Always install new brake pads, irrespective of the condition of the original pads, when renewing brake discs.

• NOTE: The inner brake pad is fitted with a clip which secures the pad into the caliper piston.

Remove brake pads from caliper housing.

- Discard brake pads.

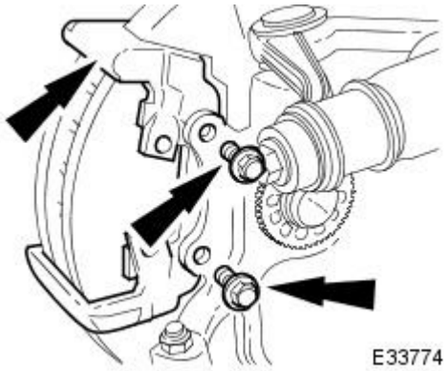

7. Remove brake carrier from vertical link.

- Remove bolts.
- Remove carrier.

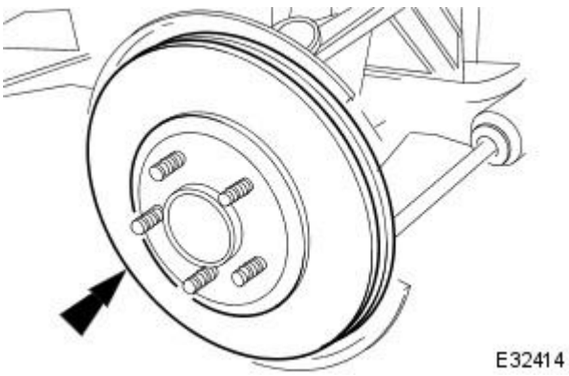

8. Withdraw brake disc from hub.

9. Repeat above procedure to remove opposite side brake disc.

10. Remove brake dust from calipers and clean mating surfaces, see WARNING above.

11. Thoroughly clean the area of the hubs where they mate against the brake discs.

Installation

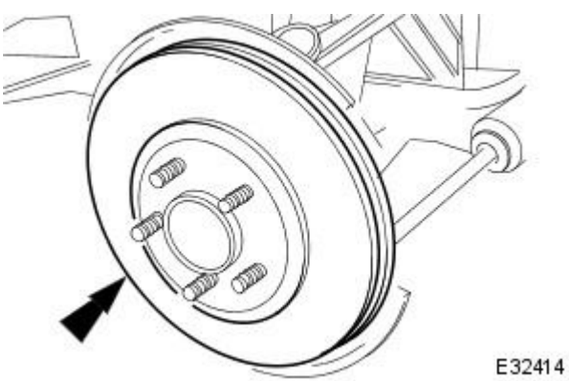

1. Install brake disc to hub.

2. Check brake disc run-out. Refer to General Procedures section 206-03.

3. Install caliper carrier to vertical link.

- Align carrier to vertical link .
- Install and tighten bolts to 140 Nm.

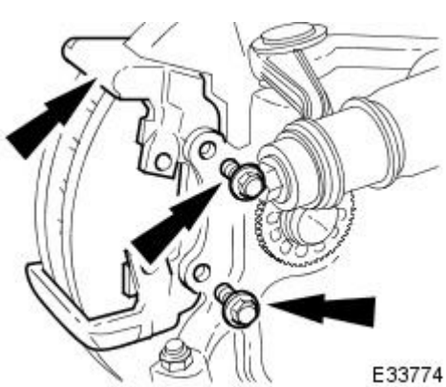

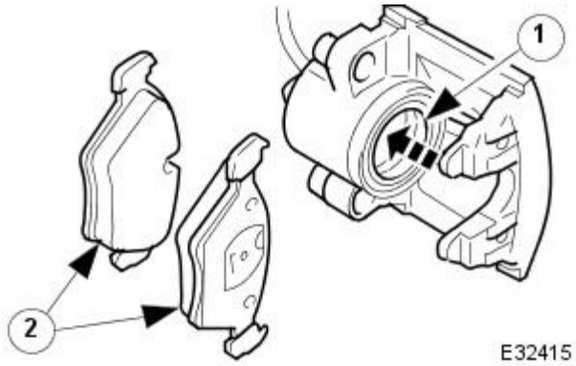

4. CAUTIONS:

⚠ Always install new brake pads, irrespective of the condition of the original pads, when renewing brake discs.

⚠ Retracting the caliper piston may cause the fluid reservoir to over-flow. Remove brake fluid spillage immediately from paint work, with clean water.

• NOTE: Clean caliper piston to pad mating surface.

Install brake pads into caliper housing.

1. Slowly retract piston into caliper housing.
2. Remove paper backing from pads to reveal adhesive shim. Install brake pads, insert clip located on back of inner pad into caliper piston.

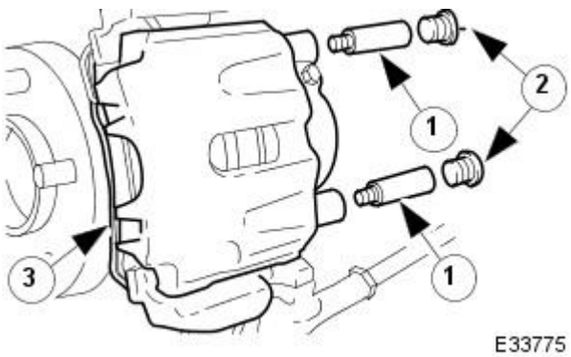

5. Install caliper housing to caliper carrier.

- Align housing to carrier.
  1. Install and tighten guide pins to 25-30 Nm.
  2. Install dust covers.
  3. Install anti-rattle spring.

6. Repeat above procedure to install opposite side brake disc.

7. Fit wheels. Refer to operation 74.20.05.

8. Remove stands and lower vehicle. Refer to section 100-02.

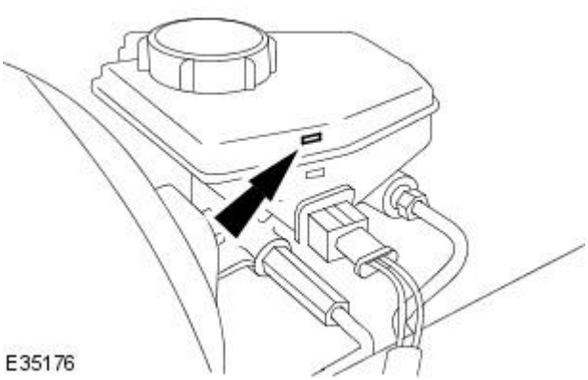

9. ⚠ CAUTION: Remove brake fluid spillage immediately from paint work, with clean water.

Check brake fluid level.

- Check brake fluid level is at the maximum mark.
- Remove cloth.
- Fit cap.

10. Remove paint work protection covers, and close engine compartment.

11. Start the engine and repeatedly press the brake pedal until brake pressure is evident.

Front Disc Brake - Brake DiscVehicles With: High Performance Brakes

Removal and Installation

Removal

1. WARNINGS:

BRAKE DISCS MUST ALWAYS BE REPLACED IN PAIRS.

BRAKE DUST, IF INHALED CAN DAMAGE YOUR HEALTH. ALWAYS REMOVE BRAKE DUST USING A VACUUM BRUSH. DO NOT USE A COMPRESSED-AIR LINE TO DISPERSE BRAKE DUST INTO THE ATMOSPHERE.

• CAUTIONS:

Replacement of nuts and bolts: Various thread-locking devices are used on nuts and bolts throughout the vehicle. These devices restrict the number of times a nut or bolt can be used. See section 100-00 for information.

When removing the caliper; remove the bolts that secure the caliper to the vertical link only. DO NOT loosen any other caliper bolts.

Open engine compartment and install paint work protection covers to fenders.

2. Raise front of vehicle and support on stands. See Section 100-02.

3. Remove front wheels. Refer to operation 74.20.05.

4. CAUTION: Remove brake fluid spillage immediately from paint work, with clean water.

Loosen brake fluid reservoir-cap.

- Position a cloth around the reservoir to collect any fluid spillage.

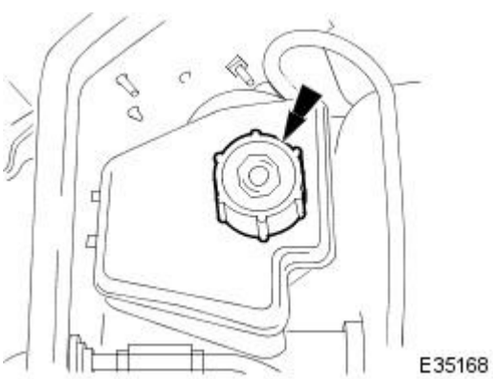

5. CAUTION: Always install new brake pads, irrespective of the condition of the original pads, when renewing brake discs.

Remove brake pads from caliper.

1. Remove 'R' clips.
2. Withdraw pins from caliper.
3. Remove anti-rattle spring.
4. Discard brake pads.

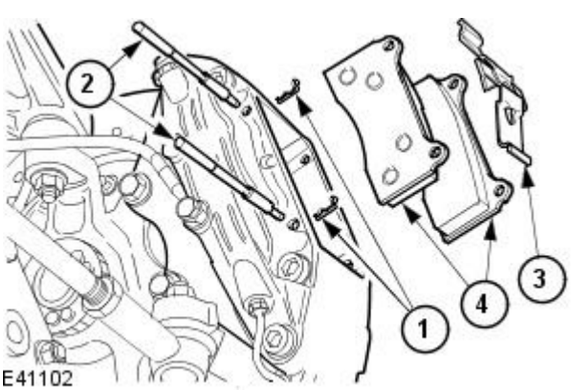

6. CAUTION: Do not allow the caliper to hang on the hydraulic hose, as this will damage the hose.

Remove caliper from vertical link.

- Remove bolts.
- Remove caliper and tie aside.

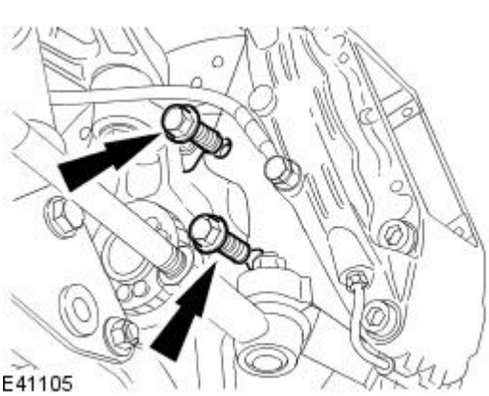

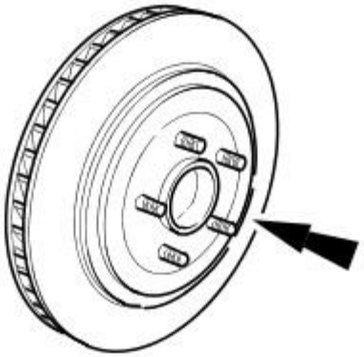

E40581

7. Remove brake disc from hub.

8. Repeat above procedure to remove opposite side brake disc.

9. Remove brake dust from calipers and clean mating surfaces, see WARNING above.

Installation

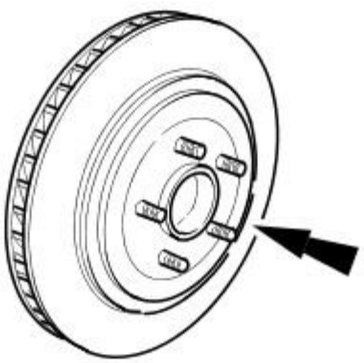

E40581

1. Thoroughly clean the mating surface areas of the hubs and brake discs.

2. Install brake disc to hub.

3. Check brake disc run-out. Refer to General Procedures section 206-03.

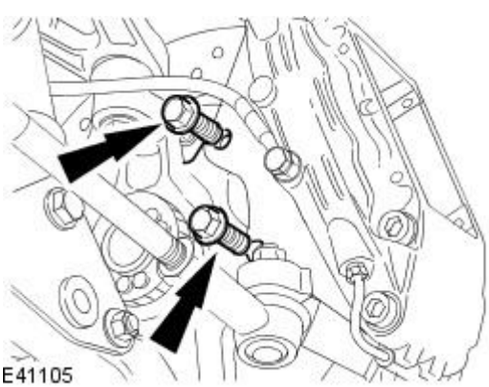

E41105

4. CAUTION: Install new brake caliper retaining bolts. Failure to follow this instruction may result in damage to the vehicle.

Install caliper to vertical link.

- Install and tighten bolts to 180 Nm.

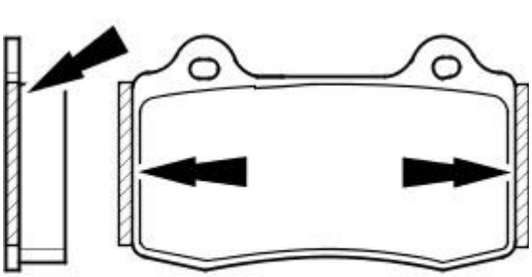

E41081

5. CAUTION: Make sure grease does not contact brake-pad friction surface or brake disc.

To prevent brake squeal apply grease to the shoulders of the brake-pad backplate.

- Refer to Specification section 206-04 for grease type.
- Apply a uniform layer of grease to backplate shoulders, making sure the whole shoulder is covered.

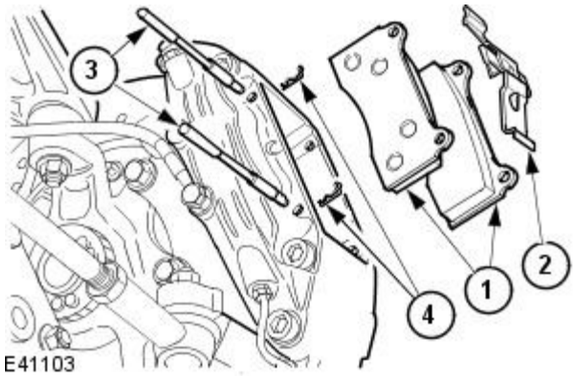

6. CAUTIONS:

Retracting the caliper piston may cause the fluid reservoir to over-flow. Remove brake fluid spillage immediately from paint work, with clean water.

Make sure the brake pads are installed to the correct orientation.

Note the condition of pins and 'R' clips and replace if necessary.

• NOTE: Slowly retract caliper pistons.

Install brake pads into caliper housing.

1. Install pads.
2. Position anti-rattle spring.
3. Install pins.
4. Install 'R' clips.

7. Repeat above procedure to install opposite side brake disc.

8. Fit wheels. Refer to operation 74.20.05.

9. Remove stands and lower vehicle. Refer to section 100-02.

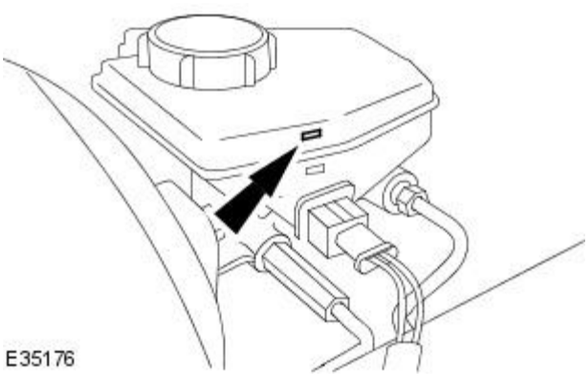

10. CAUTION: Remove brake fluid spillage immediately from paint work, with clean water.

Check brake fluid level.

- Check brake fluid level is at the maximum mark.
- Remove cloth.
- Fit cap.

11. Remove paint work protection covers, and close engine compartment.

12. Start the engine and repeatedly press the brake pedal until brake pressure is evident.

Front Disc Brake - Brake PadsVehicles With: Standard Brakes

Removal and Installation

Removal

WARNING: BRAKE DUST, IF INHALED CAN DAMAGE YOUR HEALTH. ALWAYS REMOVE BRAKE DUST USING A VACUUM BRUSH. DO NOT USE A COMPRESSED-AIR LINE TO DISPERSE BRAKE DUST INTO THE ATMOSPHERE.

CAUTION: Replacement of nuts and bolts: Various thread-locking devices are used on nuts and bolts throughout the vehicle. These devices restrict the number of times a nut or bolt can be used. See section 100-00 for information.

1. Open engine compartment and fit paint work protection covers to fenders.

2. Raise front of vehicle and support on stands. See Section 100-02.

3. Remove front wheels. See Section 204-04.

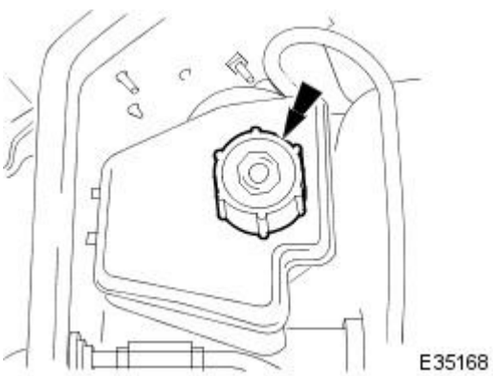

4. CAUTION: Remove brake fluid spillage immediately from paint work, with clean water.

Loosen brake fluid reservoir-cap.

- Position a cloth around the reservoir to collect any fluid spillage.

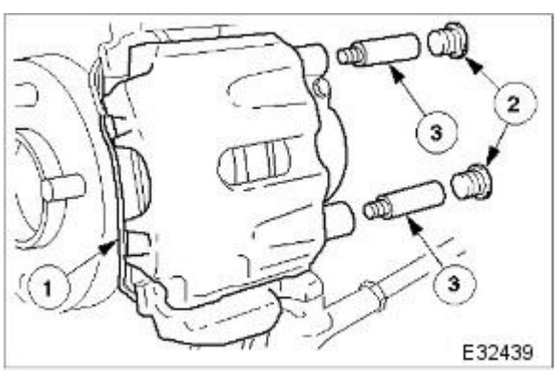

5. CAUTION: Tie caliper housing aside. Do not allow the caliper housing to hang on the hydraulic hose, as this will damage the hose.

Remove caliper housing from caliper carrier.

1. Remove anti-rattle spring.
2. Remove dust covers.
3. Remove guide pins.

- Remove and tie caliper housing aside.

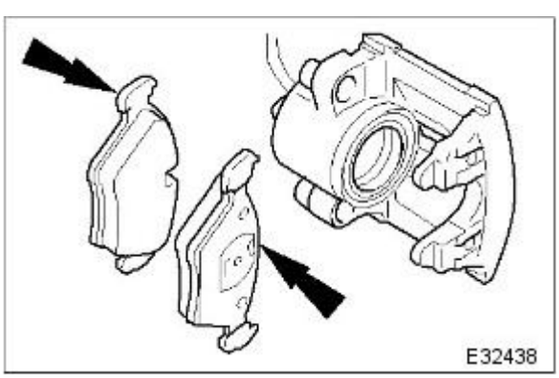

6. NOTE: The inner brake pad is fitted with a clip which secures the pad into the caliper piston.

Remove brake pads from caliper housing.

- Discard brake pads.

7. Clean all mating surfaces and remove brake dust, see WARNING above.

8. Repeat above procedure to remove opposite side brake pads.

Installation

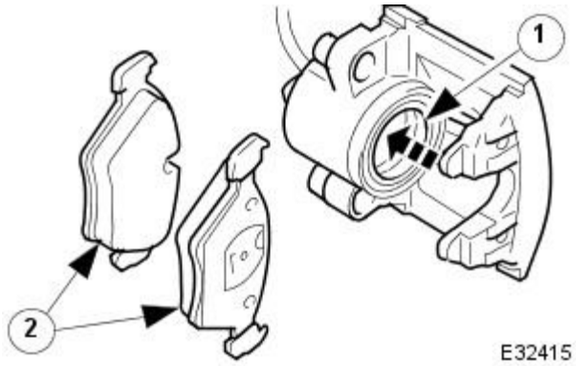

1. CAUTION: Retracting the caliper piston may cause the fluid reservoir to over-flow. Remove brake fluid spillage immediately from paint work, with clean water.

• NOTE: Clean caliper piston to pad mating surface.

Install brake pads into caliper housing.

1. Slowly retract piston into caliper housing.
2. Remove paper backing from pads to reveal adhesive shim. Install brake pads, insert clip located on back of inner pad into caliper piston.

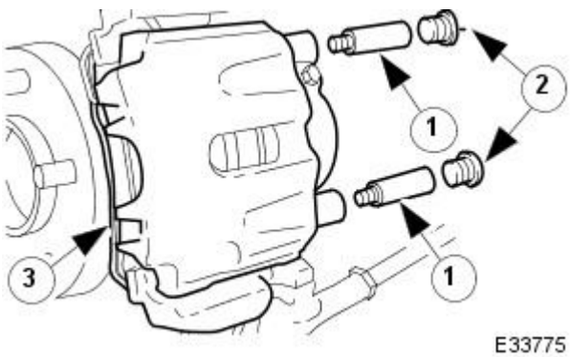

2. Install caliper housing to caliper carrier.

- Align housing to carrier.
  1. Install and tighten guide pins to 25-30 Nm.
  2. Install dust covers.
  3. Install anti-rattle spring.

3. Repeat above procedure to install opposite side brake pads.

4. Fit wheels. Refer to section 204-04.

5. Remove stands and lower vehicle. Refer to section 100-02.

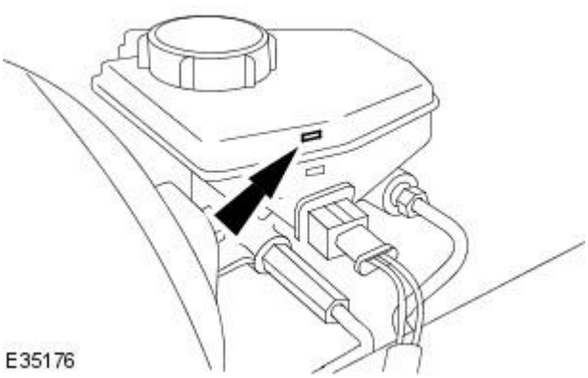

6. CAUTION: Remove brake fluid spillage immediately from paint work, with clean water.

Check brake fluid level.

- Check brake fluid level is at the maximum mark.
- Remove cloth.
- Fit cap.

7. Remove paint work protection covers, and close engine compartment.

8. Start the engine and repeatedly press the brake pedal until brake pressure is evident.

Front Disc Brake - Brake PadsVehicles With: High Performance Brakes

Removal and Installation

Removal

1. WARNING: BRAKE DUST, IF INHALED CAN DAMAGE YOUR HEALTH. ALWAYS REMOVE BRAKE DUST USING A VACUUM BRUSH. DO NOT USE A COMPRESSED-AIR LINE TO DISPERSE BRAKE DUST INTO THE ATMOSPHERE. Failure to follow this instruction may result in personal injury.

• CAUTIONS:

Brake pads must always be replaced in axle sets.

Replacement of nuts and bolts: Various thread-locking devices are used on nuts and bolts throughout the vehicle. These devices restrict the number of times a nut or bolt can be used.
For additional information, refer to: General Service Information (100-00 General Information, Description and Operation).

The High performance brake caliper is aligned to the brake disc when it is first installed to the vehicle, therefore, care must be taken not to disturb this alignment. When removing the caliper; remove the bolts that secure the anchor bracket to the vertical link only. DO NOT loosen any other caliper bolts.

Open engine compartment and fit paint work protection covers to fenders.

2. Raise front of vehicle and support on stands.
For additional information, refer to: Using the Workshop Jack (100-02 Jacking and Lifting, General Procedures).

3. Remove front wheels.
For additional information, refer to: Wheel and Tire (204-04 Wheels and Tires, Removal and Installation).

4. CAUTION: Remove brake fluid spillage immediately from paint work, with clean water.

Loosen brake fluid reservoir-cap.

- Position a cloth around the reservoir to collect any fluid spillage.

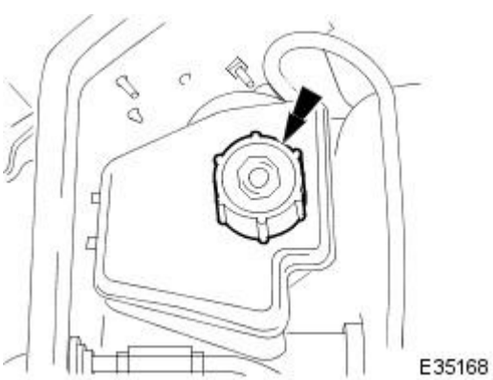

5. Remove brake pads from caliper.

1. Remove 'R' clips.
2. Withdraw pins from caliper.
3. Remove anti-rattle spring.
4. Remove brake pads.

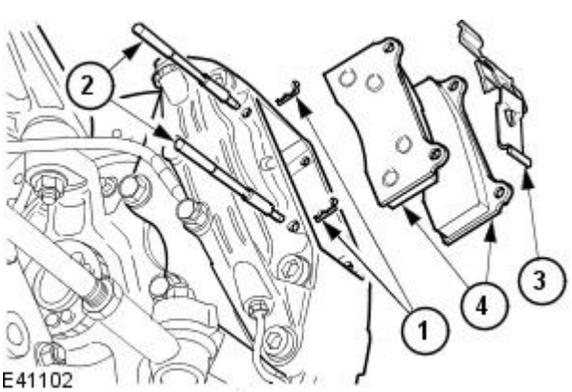

6. Clean all mating surfaces and remove brake dust, see WARNING above.

7. Repeat above procedure to remove opposite side brake pads.

Installation

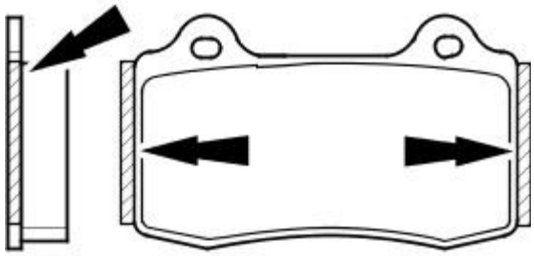

E41081

1. CAUTION: Make sure grease does not contact brake-pad friction surface or brake disc.

To prevent brake squeal apply grease to the shoulders of the brake-pad backplate.
For additional information, refer to: Specifications (206-04 Rear Disc Brake, Specifications).

- Apply a uniform layer of grease to backplate shoulders, making sure the whole shoulder is covered.

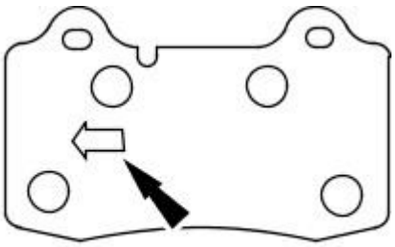

E52793

2. CAUTION: Make sure the brake pads are fitted with the direction arrow following the direction of wheel rotation.

Make sure the brake pads are fitted with the direction arrow following the direction of wheel rotation.

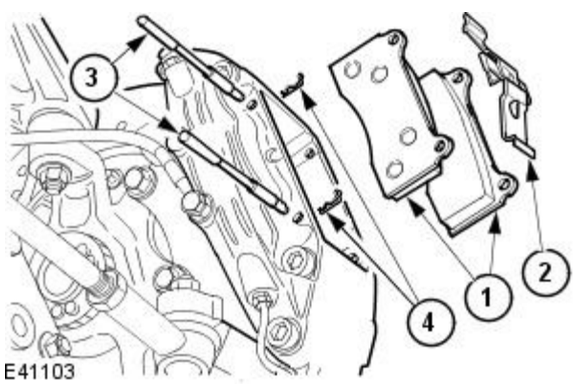

E41103

3. CAUTIONS:

Retracting the caliper piston may cause the fluid reservoir to over-flow. Remove brake fluid spillage immediately from paint work, with clean water.

Make sure the brake pads are installed to the correct orientation.

Make sure the brake pads are fitted with the direction arrow following the direction of wheel rotation.

Note the condition of pins and 'R' clips and replace if necessary.

• NOTE: Slowly retract caliper pistons.

Install brake pads into caliper housing.

1. Install pads.
2. Position anti-rattle spring.
3. Install pins.
4. Install 'R' clips.

4. Repeat above procedure to install opposite side brake pads.

5. Fit wheels.
For additional information, refer to: Wheel and Tire (204-04 Wheels and Tires, Removal and Installation).

6. Remove stands and lower vehicle.
For additional information, refer to: Using the Workshop Jack (100-02 Jacking and Lifting, General Procedures).

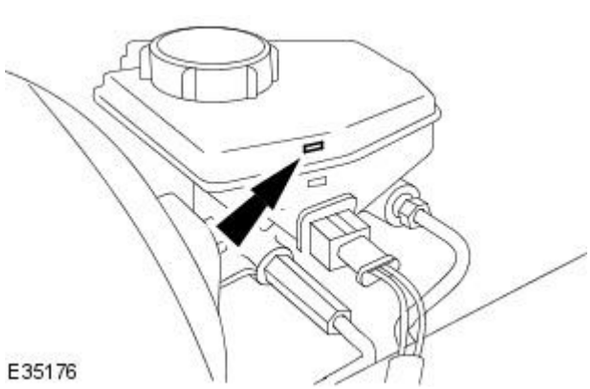

E35176

7. CAUTION: Remove brake fluid spillage immediately from paint work, with clean water.

Check brake fluid level.

- Check brake fluid level is at the maximum mark.
- Remove cloth.
- Fit cap.

8. Remove paint work protection covers, and close engine compartment.

9. Start the engine and repeatedly press the brake pedal until brake pressure is evident.

Rear Disc Brake -

Lubricants, Fluids, Sealants and Adhesives

CAUTION: Do not use brake fluid ITT Super Dot 4 on 2006my vehicles onwards. Failure to follow this instruction may result in damage to the vehicle.

• NOTE: Brake fluid ITT Super Dot 4 has now been superseded by Shell ESL Super Dot 4 which is the Jaguar recommended brake fluid. Shell ESL Super Dot 4 can be used on all model years.

Unit	Specification
Brake fluid	ITT Super Dot 4
Brake fluid	Shell ESL Super Dot 4
Brembo Brake Grease	Molikote Cu 7439

Torques - Vehicles With: Brembo Brakes

Component	Nm
Brake Caliper retaining bolts	60
Bleed nipple	12-16
Union bolt - brake hose to caliper	22-26

Torques - Vehicles without: Brembo Brakes

Component	Nm
Brake Caliper retaining bolts	60
Guide Pin - caliper housing to caliper carrier	25-30
Bleed nipple	8-11
Hose union to rear caliper - union bolt	30-40

Brake Tube, Hoses and Bracket Torques

CAUTION: Replacement of nuts and bolts: Various thread-locking devices are used on nuts and bolts throughout the vehicle. These devices restrict the number of times a nut or bolt can be used. See section 100-00 for information.

Component	Nm
M10 hose locknut	15-20
M10 brake tube female-nut	13-17
M10 brake tube male-nut	13-17
M12 brake tube male-nut	15-20
M18 bulkhead brake tube connector	22-28
Brake tube clip retention-bracket to body	4-6

Published: 11-May-2011

Rear Disc Brake - Rear Disc Brake

Description and Operation

Components

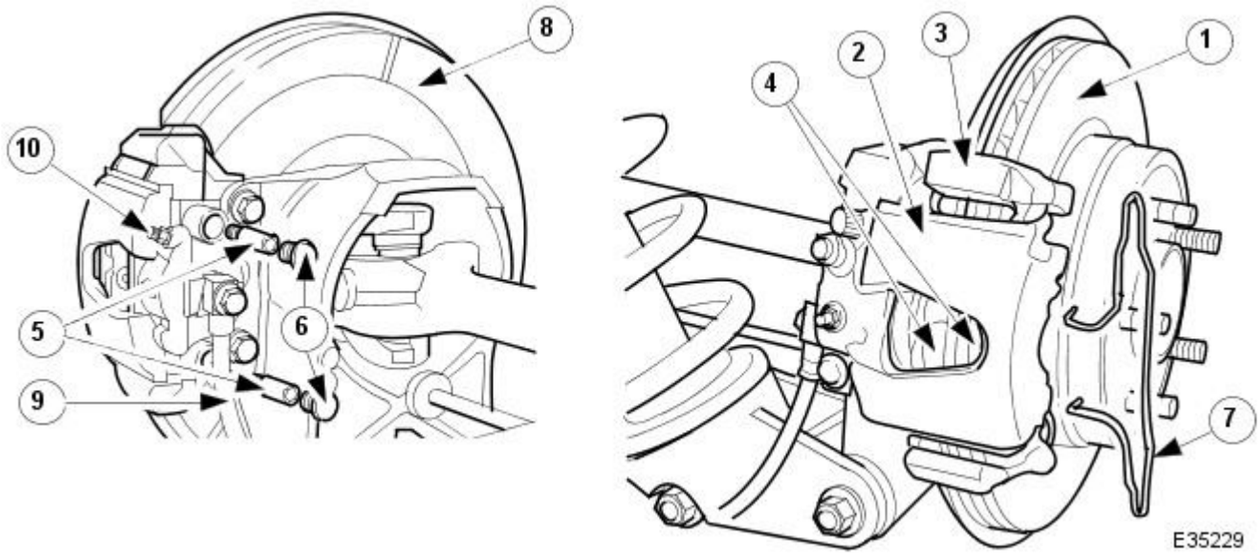

Item	Part Number	Description
1	—	Brake Disc
2	—	Caliper Housing
3	—	Caliper Carrier
4	—	Brake Pads
5	—	Guide Pins
6	—	Dust Covers
7	—	Anti-rattle Spring
8	—	Disc Shield
9	—	Brake Hose
10	—	Bleed Nipple

Description and Operation

The brake disc is mounted on the wheel studs and is clamped between the wheel and hub. Cooling ducts run through the center of the brake disc to provide the required ventilation to keep the disc cool under operating conditions.

The caliper carrier, which is secured to the hub carrier by two bolts, carries the single-piston caliper housing. The caliper housing is secured to the caliper carrier by two guide-pins and an anti-rattle spring. When the brakes are applied the caliper-housing piston pushes the brake pad in front of it, towards the brake disc. This movement forces the caliper housing to move along the guide-pins, in the opposite direction of the piston, to apply the second brake pad. The brake disc is therefore gripped between the two pads. As brake pressure is increased the grip on the brake disc is increased to slow-down the rotation of the road wheel.

The disc brakes require no adjustment.

Brembo Disc Brakes

Components (Brembo)

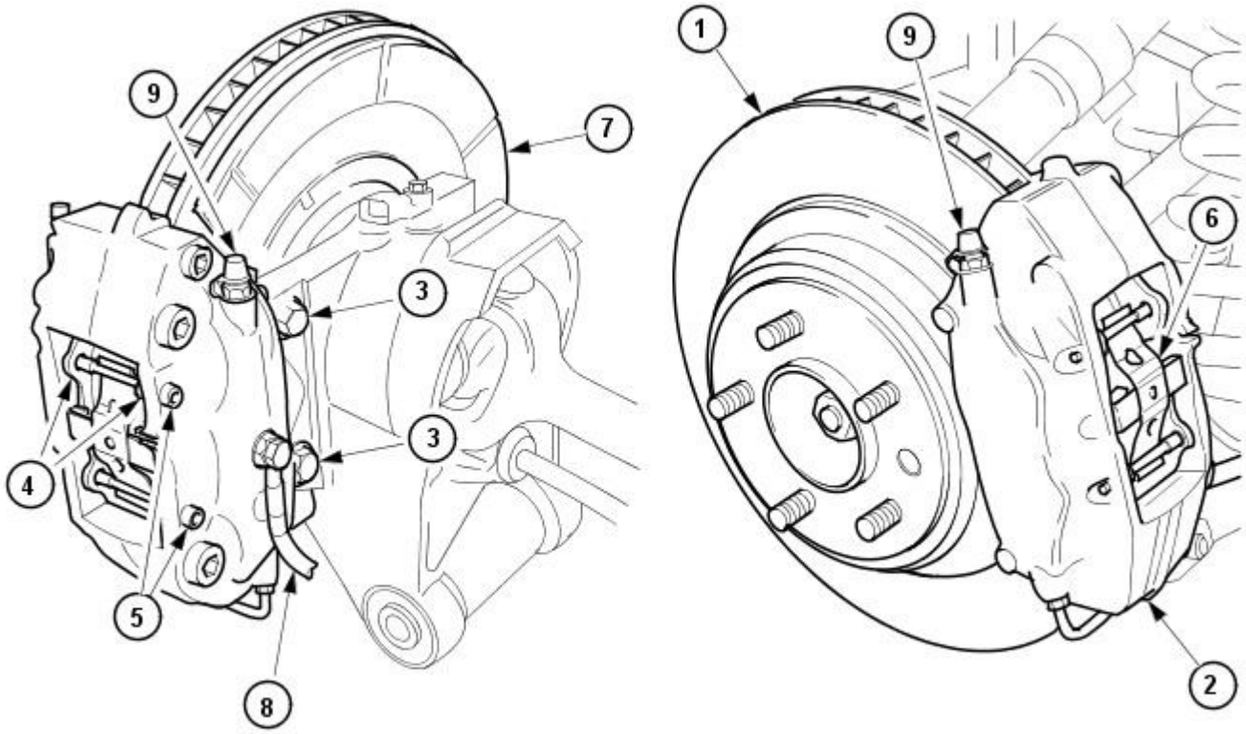

E40584

Item	Part Number	Description
1	—	Brake Disc
2	—	Caliper Housing
3	—	Brake caliper retaining bolts
4	—	Brake Pads
5	—	Guide Pins
6	—	Anti-rattle Spring
7	—	Disc Shield
8	—	Brake Hose
9	—	Bleed Nipples

Description and Operation (Brembo)

CAUTION: When removing the caliper; remove the bolts that secure the caliper to the hub carrier only. DO NOT loosen any other caliper bolts.

Brembo calipers and discs provide higher-performance braking using the existing hydraulic braking system. The brakes are installed to the vehicle using unique hub carriers, hubs, hydraulic hoses and disc shields.

The rear brake disc consists of a ventilated disc, with the option of a cross drilled brake disc. The disc is mounted on the wheel studs and is clamped between the wheel and hub. Cooling ducts run through the center of the brake disc to provide the required ventilation to keep the disc cool under operating conditions.

Modified disc shields are installed to accommodate the larger diameter discs.

Due to the use of fixed calipers in place of the standard floating caliper, certain lateral dimensions on the hub carriers and hubs are critical to achieve correct clearance and operation of the brakes. Therefore special hub carriers and hubs set within a certain tolerance are installed with Brembo brakes.

The four cylinder brake caliper is rigidly attached to the vertical link. The caliper is a split assembly with each side of the caliper, housing two pistons. The two-pairs of opposed pistons act directly on the brake pads mounted one each side of the disc.

Stainless steel hydraulic hoses connect the calipers to the existing brake tubes. It is important that these hoses are aligned correctly when installed to prevent them fouling on the steering and suspension components. Refer to operation 70.55.25 for information.

The Brembo disc brakes require no adjustment.

Rear Disc Brake - Brake CaliperVehicles With: Standard Brakes

Removal and Installation

Special Tool(s)	
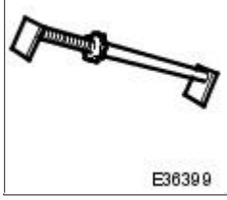 E36399	Brake Pedal Hold Tool JDS 9013

Removal

WARNING: BRAKE DUST, IF INHALED CAN DAMAGE YOUR HEALTH. ALWAYS REMOVE BRAKE DUST USING A VACUUM BRUSH. DO NOT USE A COMPRESSED-AIR LINE TO DISPERSE BRAKE DUST INTO THE ATMOSPHERE.

• CAUTIONS:

Replacement of nuts and bolts: Various thread-locking devices are used on nuts and bolts throughout the vehicle. These devices restrict the number of times a nut or bolt can be used. See section 100-00 for information.

Remove brake fluid spillage immediately from paint work, with clean water.

The brake pad adhesive backing must not be reused, therefore always install new brake pads, irrespective of the condition of the original pads when replacing a brake caliper. Always replace brake pads as an axle set.

1. Open luggage compartment lid and fit suitable paintwork protection equipment.

2. Raise vehicle on a four-post lift.

3. Raise rear of vehicle and support on stands. See Section 100-02.

4. Remove rear wheel. See Section 204-04.

5. NOTE: The following three pictorial procedures must be carried-out to minimize brake fluid loss when disconnecting the brake hose.

Open Left-Hand-Front and Left-Hand-Rear caliper bleed nipples.

- Connect a bleed tube and container to the calipers.
- Open bleed nipples.

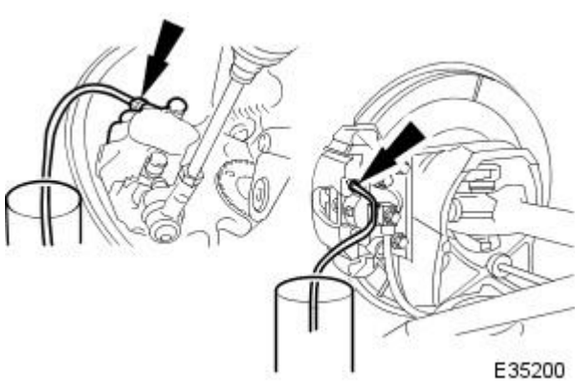

6. Depress and hold down brake pedal at the specified measurement using the special tool.

1. Position tool between brake pedal and seat frame.
2. Turn the tool wheel until the brake pedal is held 60mm down from its released position.

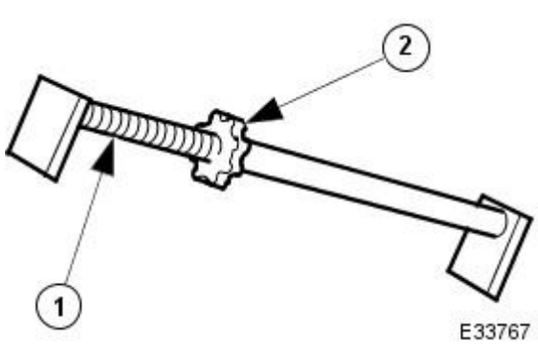

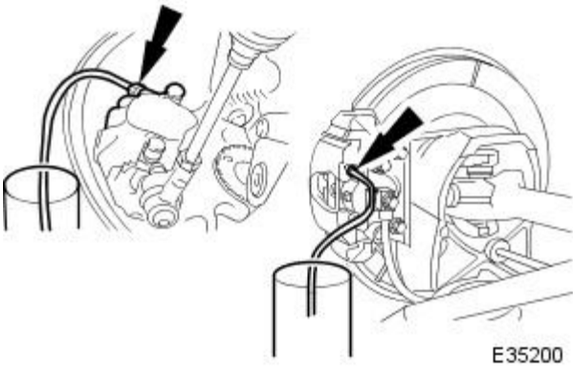

7. Close bleed nipples on both calipers.

- Remove bleed tubes and containers.
- Tighten front bleed nipple to 4-6 Nm.
- Tighten rear bleed nipple to 8-11 Nm.

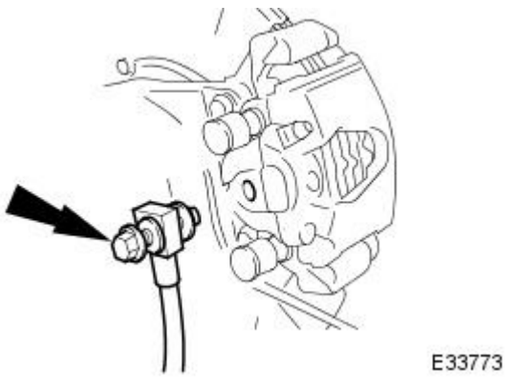

8. Disconnect brake hose from rear caliper housing.

- Install plugs to caliper and brake hose.

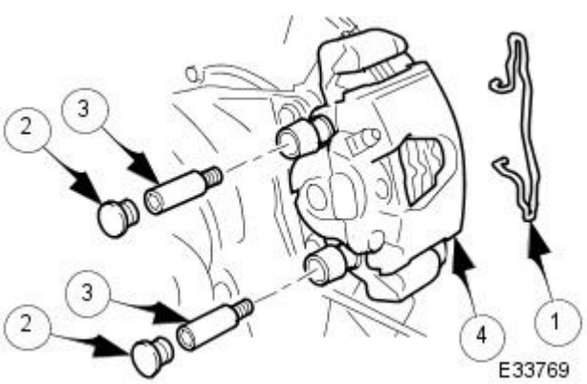

9. Remove caliper housing from caliper carrier.

1. Remove anti-rattle spring.
2. Remove dust covers.
3. Remove guide pins.
4. Remove housing from carrier.

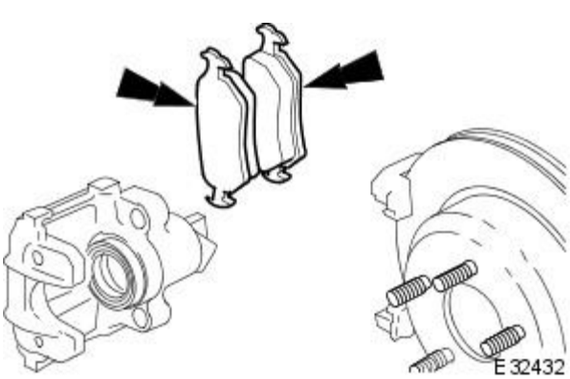

10. NOTE: The inner brake pad is fitted with a clip which secures the pad into the caliper piston.

Remove and discard brake pads. (See Caution above).

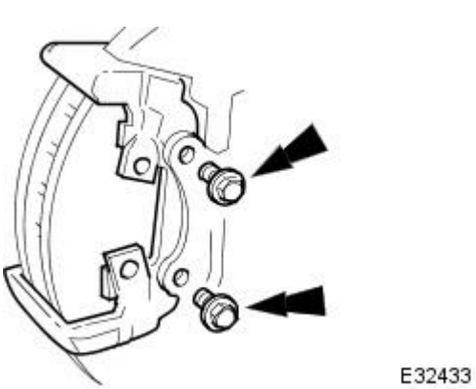

11. Remove caliper carrier from hub carrier.

- Remove bolts.
- Remove carrier.

12. Clean all mating surfaces and remove brake dust. See Warning above.

Installation

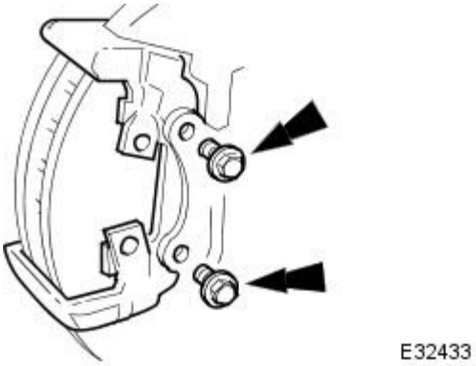

1. Install caliper carrier to hub carrier.

- Align carrier to hub carrier.
- Install and tighten bolts to 54-66 Nm.

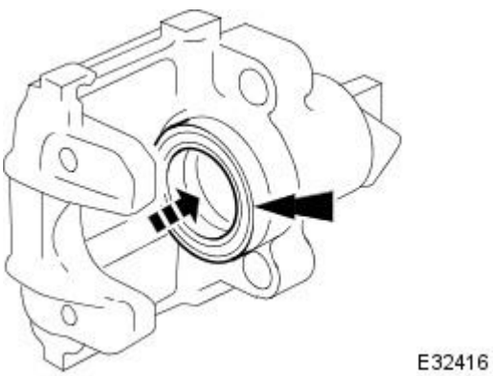

2. Make sure piston is fully retracted into caliper housing.

- Remove plug from caliper housing.
- Retract piston.

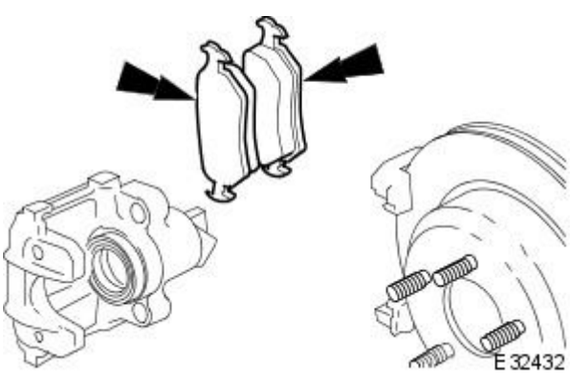

3. Install brake pads into caliper housing. (See Caution above).

- Remove paper backing from pads to reveal adhesive shim. Install brake pads, insert clip located on back of inner pad into caliper piston.

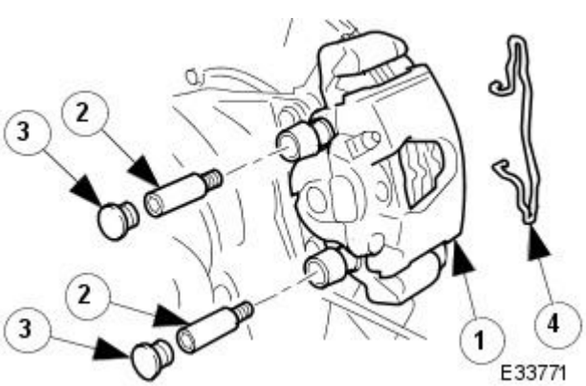

4. Install caliper housing to caliper carrier.

1. Align housing to carrier.
2. Install and tighten guide pins to 25-30 Nm.
3. Install dust covers.
4. Install anti-rattle spring.

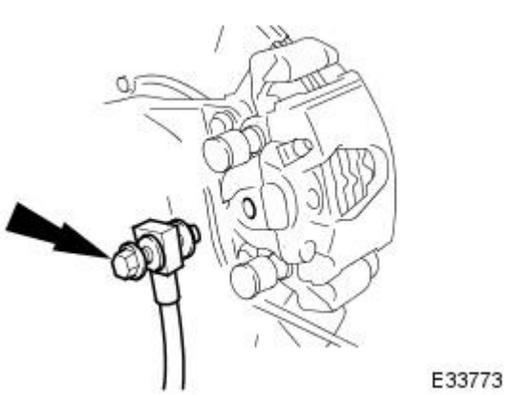

5. Connect brake hose to caliper housing.

- Remove plugs.
- Install and tighten bolt to 30-40 Nm.

6. Remove special tool from brake pedal.

7. Fit wheels. See Section 204-04.

8. Remove stands and lower vehicle. See Section 100-02.

9. Bleed brake hydraulic system. Refer to operation 70.25.03.

Rear Disc Brake - Brake CaliperVehicles With: High Performance Brakes

Removal and Installation

Special Tool(s)	
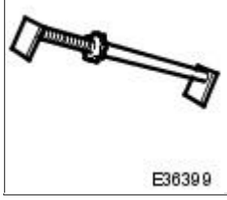 E36399	Brake Pedal Hold Tool JDS 9013

Removal

1. WARNING: BRAKE DUST, IF INHALED CAN DAMAGE YOUR HEALTH. ALWAYS REMOVE BRAKE DUST USING A VACUUM BRUSH. DO NOT USE A COMPRESSED-AIR LINE TO DISPERSE BRAKE DUST INTO THE ATMOSPHERE.

• CAUTIONS:

Replacement of nuts and bolts: Various thread-locking devices are used on nuts and bolts throughout the vehicle. These devices restrict the number of times a nut or bolt can be used. See section 100-00 for information.

Remove brake fluid spillage immediately from paint work, with clean water.

When removing the caliper; remove the bolts that secure the caliper to the hub carrier only. DO NOT loosen any other caliper bolts.

Open engine compartment and fit paint work protection covers to fenders.

2. Raise vehicle on a four-post lift.

3. Raise front of vehicle and support on stands. Refer to Section 100-02.

4. Remove front wheels. Refer to operation 74.20.05.

5. NOTE: The following three pictorial procedures must be carried-out to minimize brake fluid loss when disconnecting the brake hose.

Open Left-Hand-Front and Left-Hand-Rear caliper bleed nipples.

- Connect a bleed tube and container to the calipers.
- Open bleed nipples.

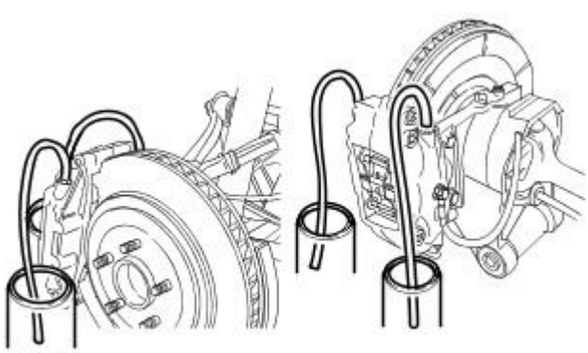

E41088

6. Depress and hold down brake pedal at the specified measurement using the special tool.

1. Position tool between brake pedal and seat frame.
2. Turn the tool wheel until the brake pedal is held 60mm down from its released position.

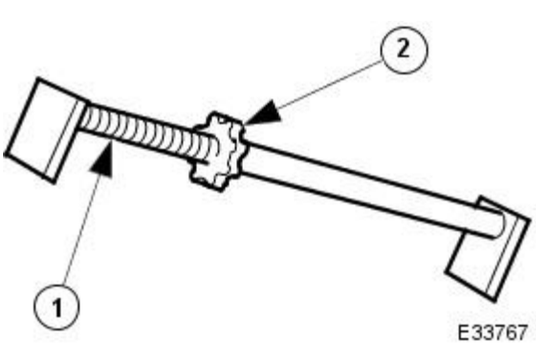

E33767

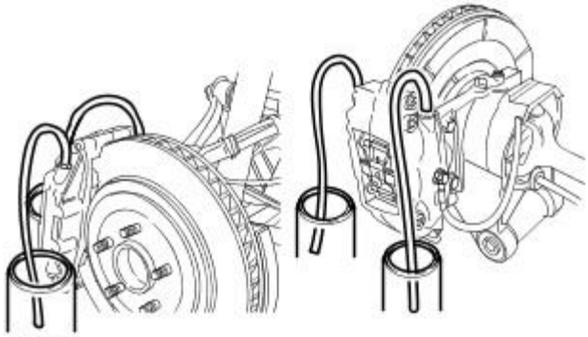

E41088

7. Close bleed nipples on both calipers.

- Tighten bleed nipples to 12-16 Nm.
- Remove bleed tubes and containers.

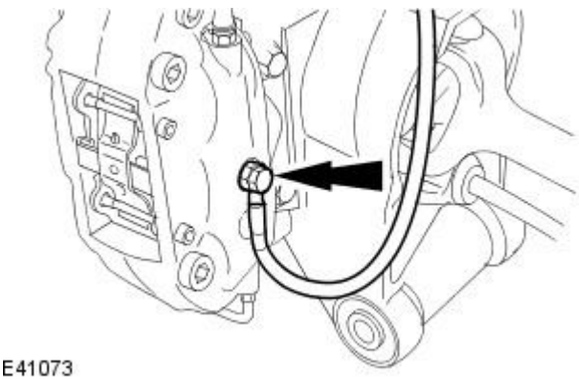

E41073

8. Release brake hose from caliper.

- Remove union bolt.
- Remove and discard sealing washers.
- Install plugs into caliper and hose.

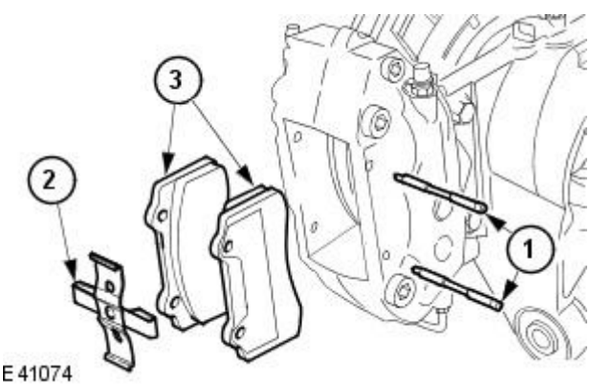

E41074

9. Remove brake pads from caliper.

1. Withdraw pins from caliper.
2. Remove anti-rattle spring.
3. Remove brake pads.

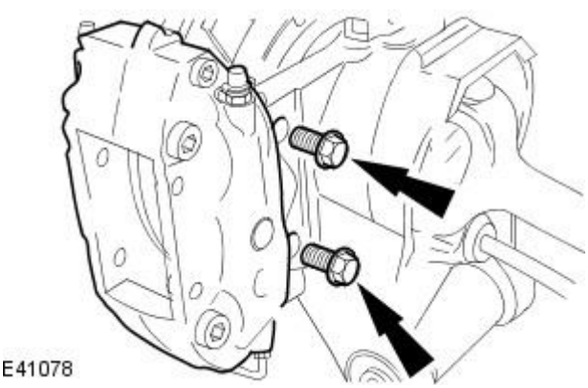

E41078

10. CAUTION: Only remove the bolts securing the caliper to the hub carrier. Refer to caution above for more information.

Remove caliper from hub carrier.

- Remove bolts.

11. Remove brake dust and clean mating surfaces. See Warning above.

Installation

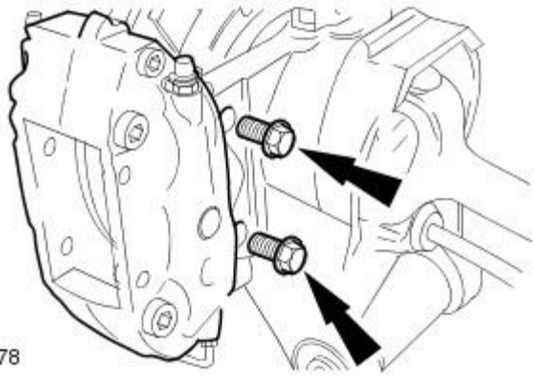

E41078

1. CAUTION: Install new brake caliper retaining bolts. Failure to follow this instruction may result in damage to the vehicle.

Install caliper to hub carrier.

- Install and tighten bolts to 60 Nm.

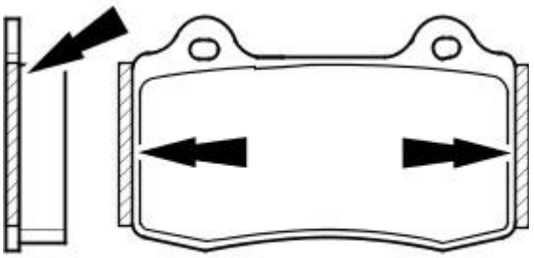

E41081

2. CAUTION: Make sure grease does not contact brake-pad friction surface or brake disc.

To prevent brake squeal apply grease to the shoulders of the brake-pad backplate.

- Refer to Specification section 206-04 for grease type.
- Apply a uniform layer of grease to backplate shoulders, making sure the whole shoulder is covered.

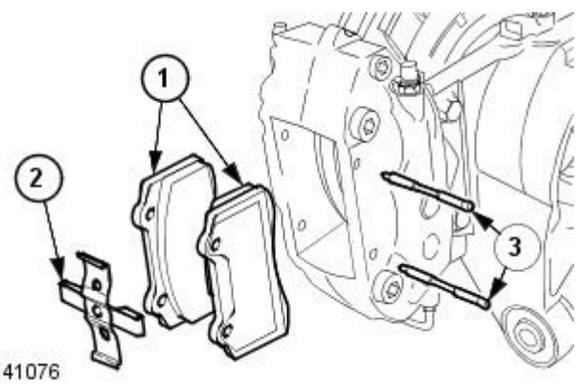

E41076

3. CAUTIONS:

Retracting the caliper piston may cause the fluid reservoir to over-flow. Remove brake fluid spillage immediately from paint work with clean water.

Make sure the brake pads are installed to the correct orientation.

Note the condition of the pins and replace if necessary.

• NOTE: Slowly retract caliper pistons.

Install brake pads.

1. Install pads.
2. Position anti-rattle spring.
3. Install pins - make sure pin collets are fully engaged into caliper.

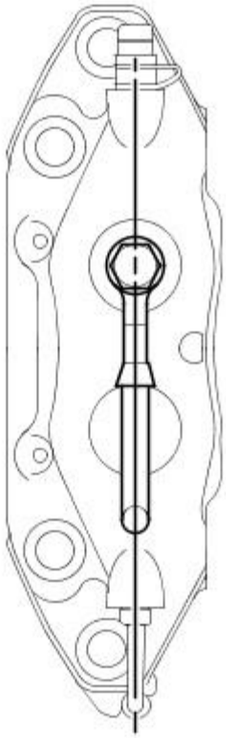

4. CAUTIONS:

The brake hose must only be installed with the vehicle's body supported and the suspension hanging.

It is important that the brake hose is aligned correctly when installed to prevent it fouling on the steering and suspension components.

After installation the brake hose must be aligned with the center line as shown.

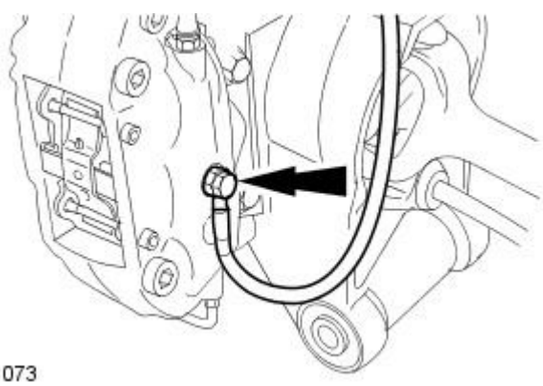

E41073

5. Install brake hose to caliper.

- Remove plugs from caliper and hose.
- Install new sealing washers.
- Align hose as shown above.
- Install and tighten union bolt to 22-26 Nm.

6. Remove special tool from brake pedal.

7. Fit wheels. Refer to operation 74.20.05.

8. NOTE: Make sure the brake hose is routed correctly.

Remove stands and lower vehicle. Refer to section 100-02.

9. Bleed brake hydraulic system. Refer to operation 70.25.06.

Rear Disc Brake - Brake DiscVehicles With: Standard Brakes

Removal and Installation

Removal

• WARNINGS:

BRAKE DISCS MUST ALWAYS BE REPLACED IN PAIRS.

BRAKE DUST, IF INHALED CAN DAMAGE YOUR HEALTH. ALWAYS REMOVE BRAKE DUST USING A VACUUM BRUSH. DO NOT USE A COMPRESSED-AIR LINE TO DISPERSE BRAKE DUST INTO THE ATMOSPHERE.

CAUTION: Replacement of nuts and bolts: Various thread-locking devices are used on nuts and bolts throughout the vehicle. These devices restrict the number of times a nut or bolt can be used. See section 100-00 for information.

1. Open engine compartment and fit paint work protection covers to fenders.

2. Raise rear of vehicle and support on stands. Refer to section 100-02.

3. Remove rear wheels. Refer to section 204-04.

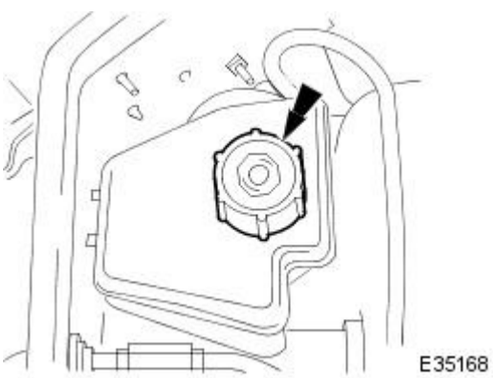

4. CAUTION: Remove brake fluid spillage immediately from paint work, with clean water.

Loosen brake fluid reservoir-cap.

- Position a cloth around the reservoir to collect any fluid spillage.

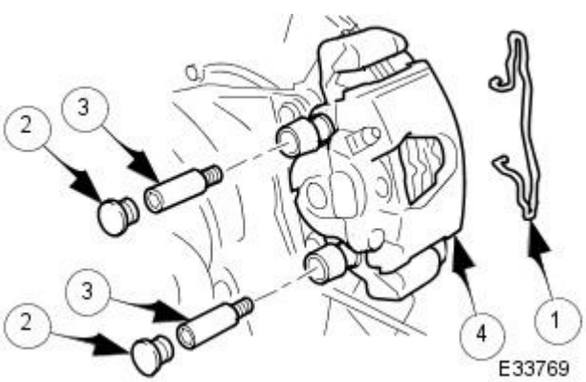

5. CAUTION: Tie caliper housing aside. Do not allow the caliper housing to hang on the hydraulic hose, as this will damage the hose.

Remove caliper housing from caliper carrier.

1. Remove anti-rattle spring.
2. Remove dust covers.
3. Remove guide pins.
4. Remove housing from carrier.

- Tie caliper housing aside.

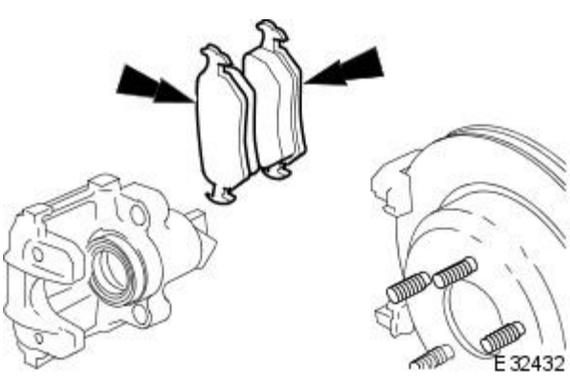

6. CAUTION: Always install new brake pads, irrespective of the condition of the original pads, when renewing a brake disc.

• NOTE: The inner brake pad is fitted with a clip which secures the pad into the caliper piston.

Remove brake pads from caliper housing.

- Discard brake pads.

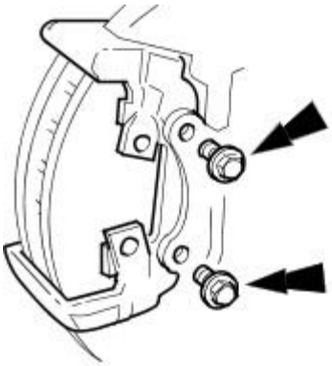

E32433

7. Remove caliper carrier from hub carrier.

- Remove bolts.
- Remove carrier.

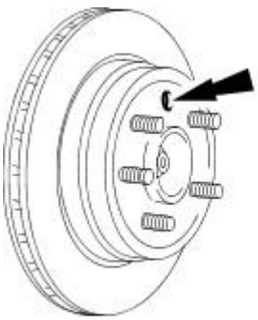

E33779

8. Align brake disc access hole with parking brake adjuster.

- Remove plug from access hole.
- Rotate brake disc until access hole is aligned with adjuster.

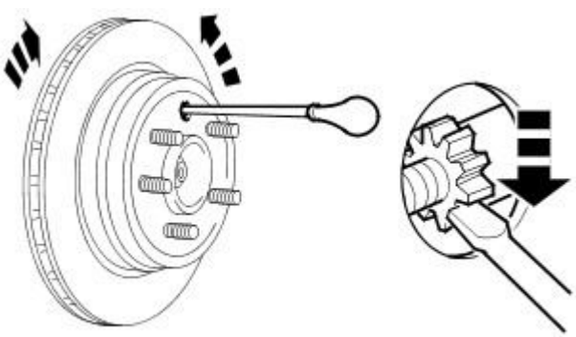

E33780

9. Slacken parking brake adjuster.

- Rotate adjuster clockwise.

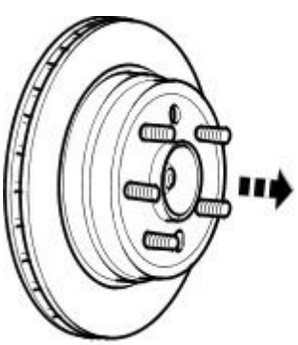

E32434

10. Remove brake disc from wheel studs.

11. Remove brake dust from calipers, and from area of parking brake shoes, see WARNING above.

12. Repeat above procedure to remove opposite side brake disc.

13. Thoroughly clean the area of both hubs where they mate against the brake discs.

Installation

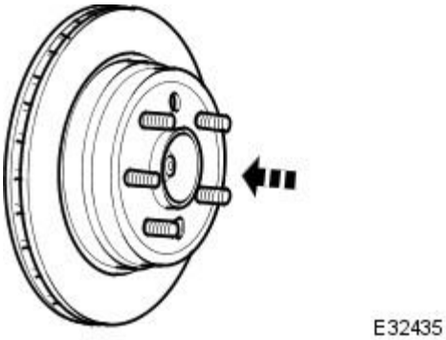

1. Install brake disc to wheel studs.

- Make sure hub and brake disc access holes are aligned.

2. Set the parking brake, refer to operation 70.35.37.

3. Check brake disc run-out. Refer to General Procedures section 206-04.

4. Install caliper carrier to hub carrier.

- Position carrier.
- Install and tighten bolts to 54-66 Nm.

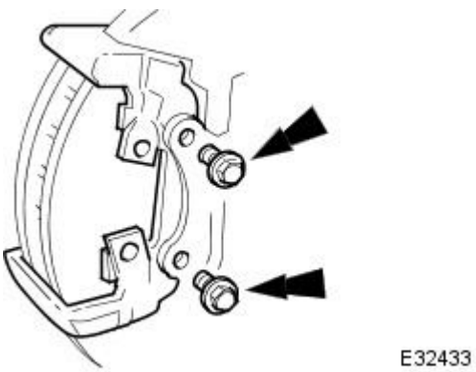

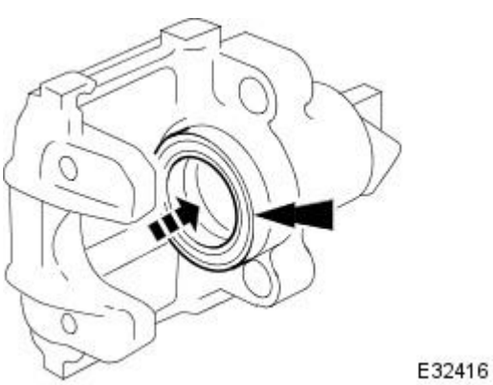

5. CAUTION: Retracting the caliper piston may cause the fluid reservoir to over-flow. Remove brake fluid spillage immediately from paint work, with clean water.

Slowly retract piston into caliper housing.

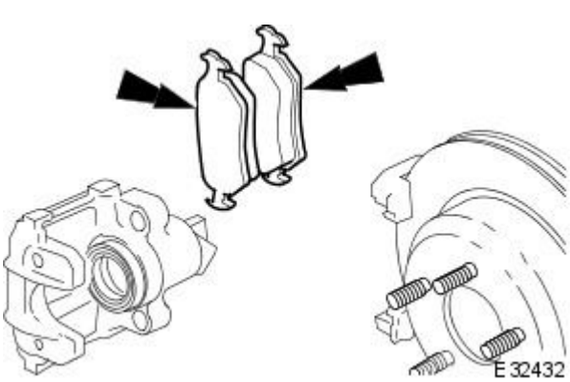

6. CAUTION: Always install new brake pads, irrespective of the condition of the original pads, when renewing a brake disc.

• NOTE: Clean caliper piston to pad mating surface.

Install brake pads to caliper housing.

- Remove paper backing from pads to reveal adhesive shim. Install brake pads, insert clip located on back of inner pad into caliper piston.

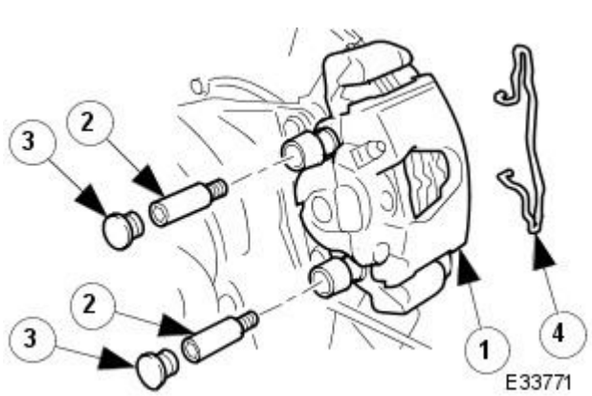

7. Install caliper housing to caliper carrier.

1. Align housing to carrier.
2. Install and tighten guide pins to 25-30 Nm.
3. Install dust covers.
4. Install anti-rattle spring.

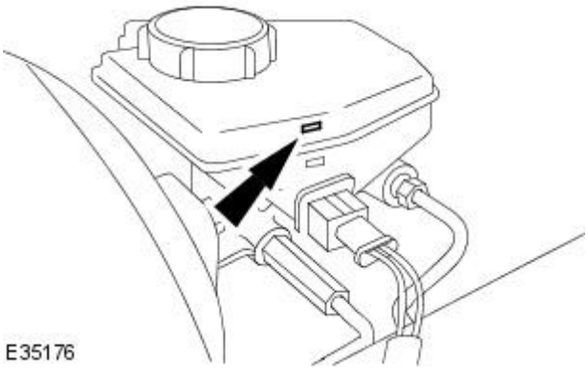

8. Repeat above procedure to install opposite side brake disc.

9. Fit wheels. Refer to section 204-04.

10. Remove stands and lower vehicle. Refer to section 100-02.

11. CAUTION: Remove brake fluid spillage immediately from paint work, with clean water.

Check brake fluid level.

- Check brake fluid level is at the maximum mark.
- Remove cloth.
- Fit cap.

12. Remove paint work protection covers, and close engine compartment.

13. Start the engine and repeatedly press the brake pedal until brake pressure is evident.

Rear Disc Brake - Brake DiscVehicles With: High Performance Brakes

Removal and Installation

Removal

1. WARNINGS:

BRAKE DISCS MUST ALWAYS BE REPLACED IN PAIRS.

BRAKE DUST, IF INHALED CAN DAMAGE YOUR HEALTH. ALWAYS REMOVE BRAKE DUST USING A VACUUM BRUSH. DO NOT USE A COMPRESSED-AIR LINE TO DISPERSE BRAKE DUST INTO THE ATMOSPHERE.

• CAUTIONS:

Replacement of nuts and bolts: Various thread-locking devices are used on nuts and bolts throughout the vehicle. These devices restrict the number of times a nut or bolt can be used. See section 100-00 for information.

When removing the caliper; remove the bolts that secure the caliper to the hub carrier only. DO NOT loosen any other caliper bolts.

Open engine compartment and fit paint work protection covers to fenders.

2. Raise rear of vehicle and support on stands. Refer to section 100-02.

3. Remove rear wheels. Refer to section 204-04.

4. CAUTION: Remove brake fluid spillage immediately from paint work, with clean water.

Loosen brake fluid reservoir-cap.

- Position a cloth around the reservoir to collect any fluid spillage.

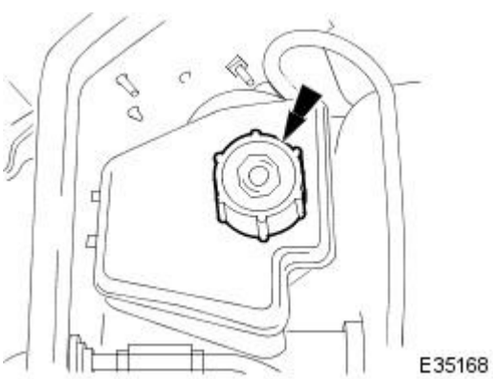

5. CAUTION: Always install new brake pads, irrespective of the condition of the original pads, when renewing brake discs.

Remove brake pads from caliper.

1. Withdraw pins from caliper.
2. Remove anti-rattle spring.
3. Discard brake pads.

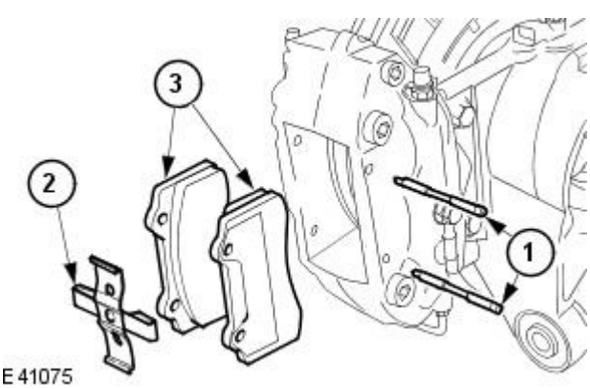

6. CAUTIONS:

Only remove the bolts securing the caliper to the hub carrier. Refer to caution above for more information.

Do not allow the caliper to hang on the hydraulic hose, as this will damage the hose.

Remove caliper from hub carrier.

- Remove bolts.
- Remove and tie caliper aside.

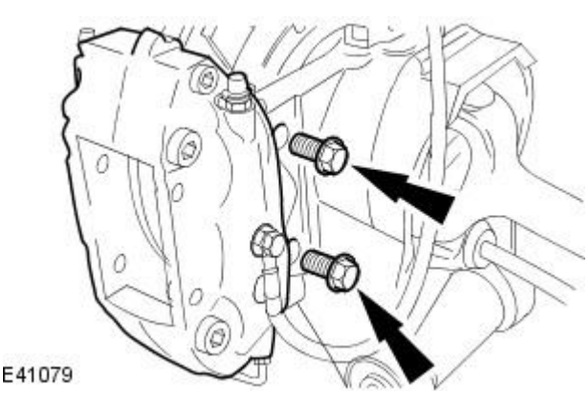

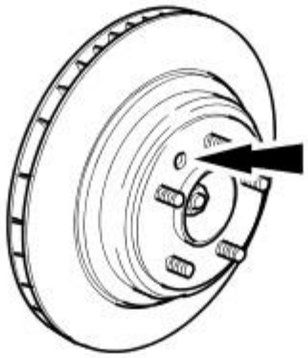

E41083

7. Align brake disc access hole with parking brake adjuster.

- Remove plug from access hole.
- Rotate brake disc until access hole is aligned with adjuster.

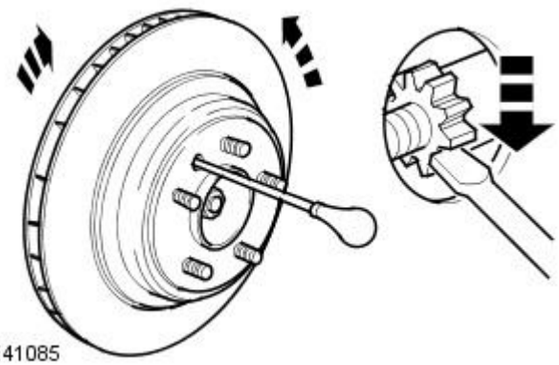

E41085

8. Slacken parking brake adjuster to allow for the removal of the brake disc.

- Rotate adjuster clockwise.

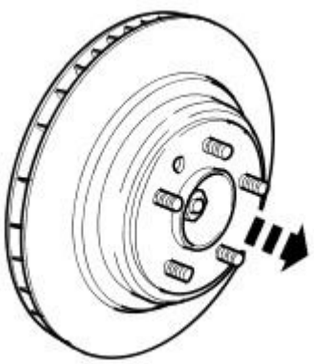

E41086

9. Remove brake disc from hub.

10. Remove brake dust from calipers, and from area of parking brake shoes, see WARNING above.

11. Repeat above procedure to remove opposite side brake disc.

12. Thoroughly clean the area of both hubs where they mate against the brake discs.

Installation

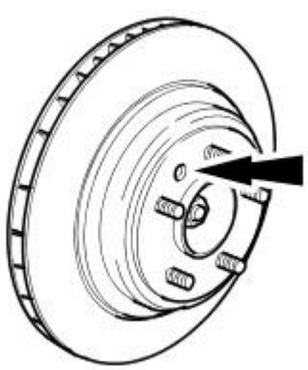

E41083

1. Install brake disc to wheel studs.

- Make sure hub and brake disc access holes are aligned.

2. Set the parking brake, refer to operation 70.35.37.

3. Check brake disc run-out. Refer to General Procedures section 206-04.

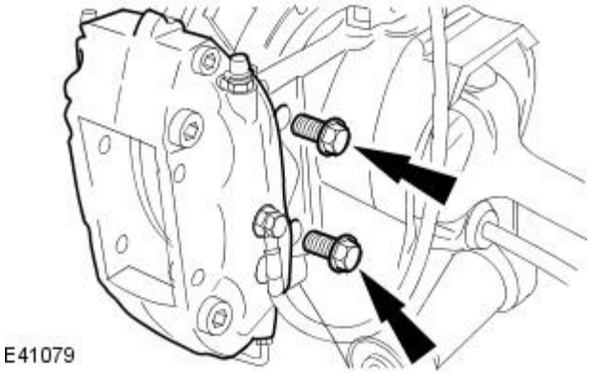

4. CAUTION: Install new brake caliper retaining bolts. Failure to follow this instruction may result in damage to the vehicle.

Install caliper to hub carrier.

- Install and tighten bolts to 60 Nm.

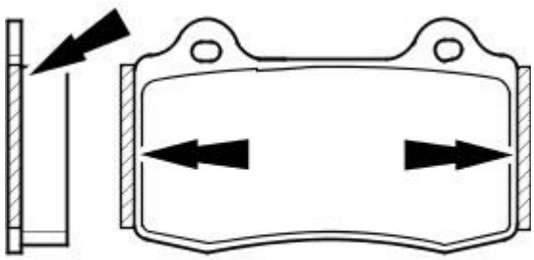

5. CAUTION: Make sure grease does not contact brake-pad friction surface or brake disc.

To prevent brake squeal apply grease to the shoulders of the brake-pad backplate.

- Refer to Specification section 206-04 for grease type.
- Apply a uniform layer of grease to backplate shoulders, making sure the whole shoulder is covered.

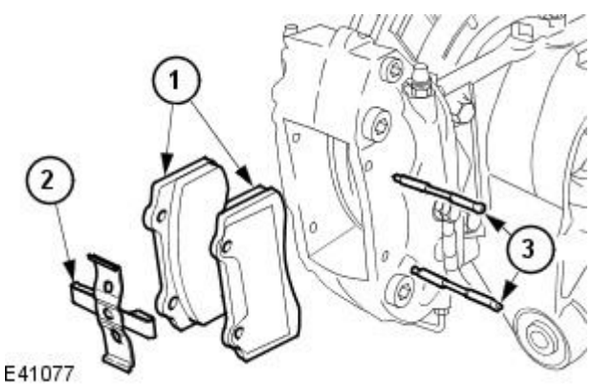

6. CAUTIONS:

Retracting the caliper piston may cause the fluid reservoir to over-flow. Remove brake fluid spillage immediately from paint work with clean water.

Always install new brake pads, irrespective of the condition of the original pads, when renewing brake discs.

Make sure the brake pads are installed to the correct orientation.

Note the condition of pins and replace if necessary.

• NOTE: Slowly retract caliper pistons.

Install brake pads.

1. Install pads.
2. Position anti-rattle spring.
3. Install pins - make sure pin collets are fully engaged into caliper.

7. Repeat above procedure to install opposite side brake disc.

8. Fit wheels. Refer to section 204-04.

9. Remove stands and lower vehicle. Refer to section 100-02.

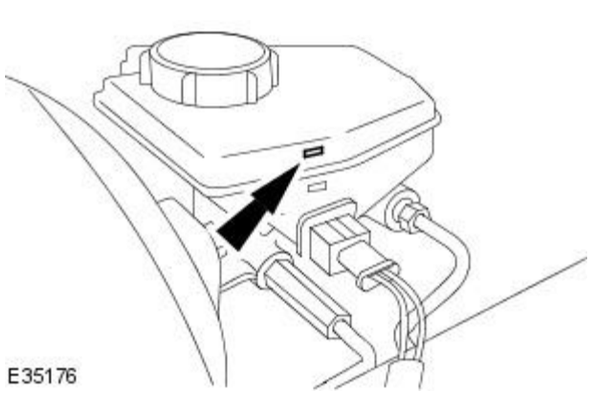

10. CAUTION: Remove brake fluid spillage immediately from paint work, with clean water.

Check brake fluid level.

- Check brake fluid level is at the maximum mark.
- Remove cloth.
- Fit cap.

11. Remove paint work protection covers, and close engine compartment.

12. Start the engine and repeatedly press the brake pedal until brake pressure is evident.

Rear Disc Brake - Brake PadsVehicles With: Standard Brakes

Removal and Installation

Removal

WARNING: BRAKE DUST, IF INHALED CAN DAMAGE YOUR HEALTH. ALWAYS REMOVE BRAKE DUST USING A VACUUM BRUSH. DO NOT USE A COMPRESSED-AIR LINE TO DISPERSE BRAKE DUST INTO THE ATMOSPHERE.

CAUTION: Replacement of nuts and bolts: Various thread-locking devices are used on nuts and bolts throughout the vehicle. These devices restrict the number of times a nut or bolt can be used. See section 100-00 for information.

1. Open engine compartment and fit paint work protection covers to fenders.

2. Raise rear of vehicle and support on stands. See Section 100-02.

3. Remove both rear wheels. See Section 204-04.

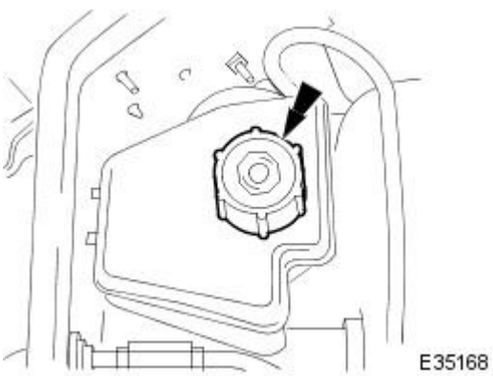

4. CAUTION: Remove brake fluid spillage immediately from paint work, with clean water.

Loosen brake fluid reservoir-cap.

- Position a cloth around the reservoir to collect any fluid spillage.

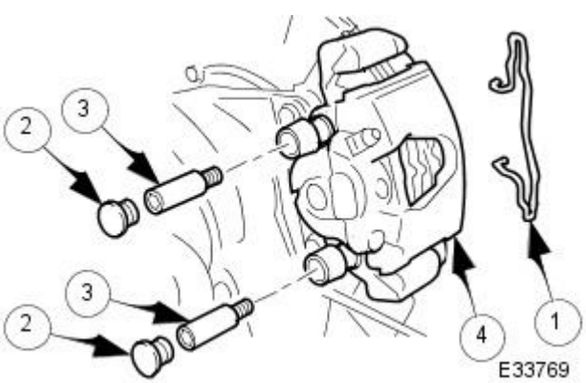

5. CAUTION: Tie caliper housing aside. Do not allow the caliper housing to hang on the hydraulic hose, as this will damage the hose.

Remove caliper housing from caliper carrier.

1. Remove anti-rattle spring.
2. Remove dust covers.
3. Remove guide pins.
4. Remove housing from carrier.

- Tie caliper housing aside.

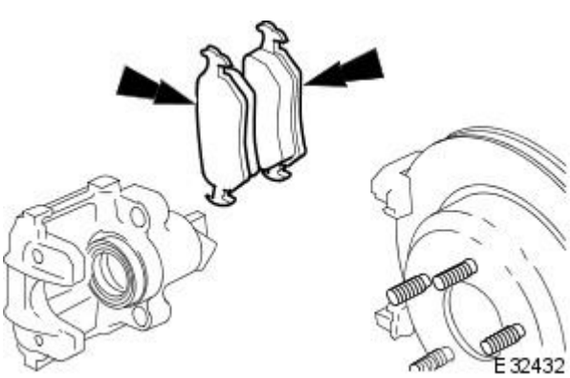

6. NOTE: The inner brake pad is fitted with a clip which secures the pad into the caliper piston.

Remove brake pads from caliper housing.

- Discard brake pads.

7. Clean all mating surfaces and remove brake dust. See Warning above.

8. Repeat above procedure to remove opposite side brake pads.

Installation

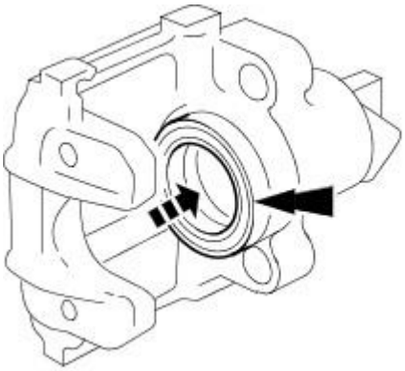

1. CAUTION: Retracting the caliper piston may cause the fluid reservoir to over-flow. Remove brake fluid spillage immediately from paint work, with clean water.

Slowly retract piston into caliper housing.

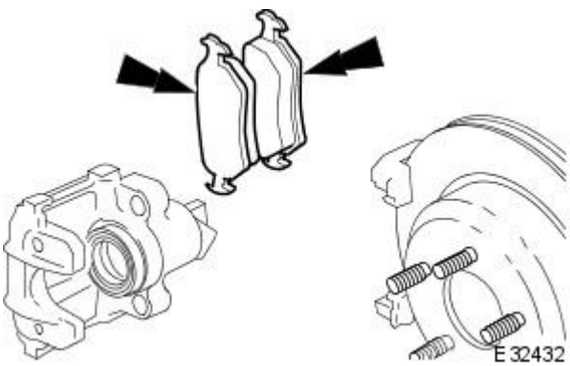

2. NOTE: Clean caliper piston to pad mating surface.

Install brake pads to caliper housing.

- Remove paper backing from pads to reveal adhesive shim. Install brake pads, insert clip located on back of inner pad into caliper piston.

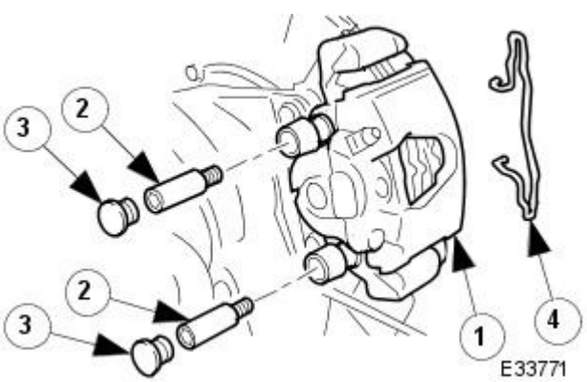

3. Install caliper housing to caliper carrier.

1. Align housing to carrier.
2. Install and tighten guide pins to 25-30 Nm.
3. Install dust covers.
4. Install anti-rattle spring.

4. Repeat above procedure to install opposite side brake pads.

5. Fit wheels. Refer to Section 204-04.

6. Remove stands and lower vehicle. Refer to Section 100-02.

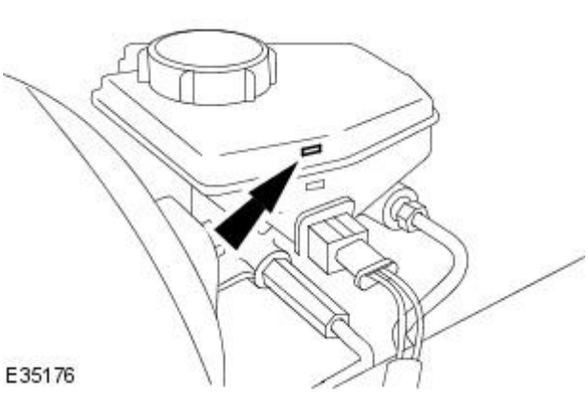

7. CAUTION: Remove brake fluid spillage immediately from paint work, with clean water.

Check brake fluid level.

- Check brake fluid level is at the maximum mark.
- Remove cloth.
- Fit cap.

8. Remove paint work protection covers, and close engine compartment.

9. Start the engine and repeatedly press the brake pedal until brake pressure is evident.

Rear Disc Brake - Brake PadsVehicles With: High Performance Brakes

Removal and Installation

Removal

1. WARNING: BRAKE DUST, IF INHALED CAN DAMAGE YOUR HEALTH. ALWAYS REMOVE BRAKE DUST USING A VACUUM BRUSH. DO NOT USE A COMPRESSED-AIR LINE TO DISPERSE BRAKE DUST INTO THE ATMOSPHERE. Failure to follow this instruction may result in personal injury.

• CAUTIONS:

Brake pads must always be replaced in axle sets.

Replacement of nuts and bolts: Various thread-locking devices are used on nuts and bolts throughout the vehicle. These devices restrict the number of times a nut or bolt can be used.
For additional information, refer to: General Service Information (100-00 General Information, Description and Operation).

The High performance brake caliper is aligned to the brake disc when it is first installed to the vehicle, therefore, care must be taken not to disturb this alignment. When removing the caliper; remove the bolts that secure the anchor bracket to the vertical link only. DO NOT loosen any other caliper bolts.

Open engine compartment and fit paint work protection covers to fenders.

2. Raise rear of vehicle and support on stands.
For additional information, refer to: Using the Workshop Jack (100-02 Jacking and Lifting, General Procedures).

3. Remove rear wheels.
For additional information, refer to: Wheel and Tire (204-04 Wheels and Tires, Removal and Installation).

4. CAUTION: Remove brake fluid spillage immediately from paint work, with clean water.

Loosen brake fluid reservoir-cap.

- Position a cloth around the reservoir to collect any fluid spillage.

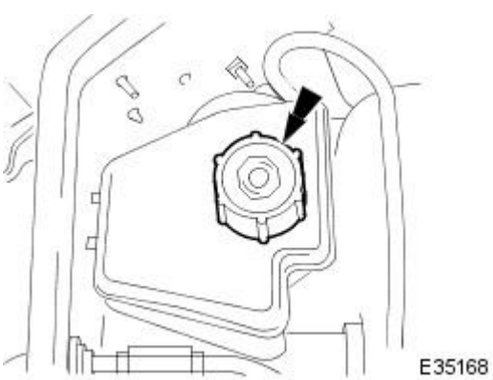

5. Remove brake pads from caliper.

1. Withdraw pins from caliper.
2. Remove anti-rattle spring.
3. Remove brake pads.

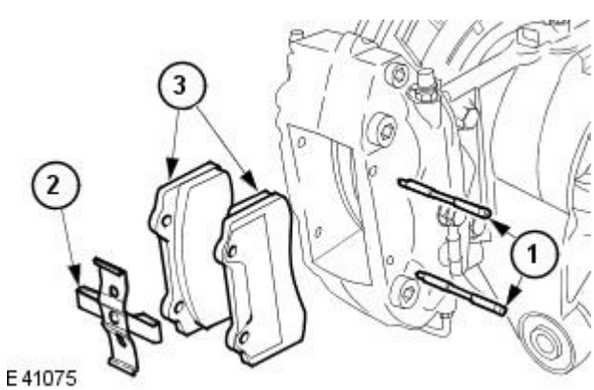

6. Clean all mating surfaces and remove brake dust, see WARNING above.

7. Repeat above procedure to remove opposite side brake pads.

Installation

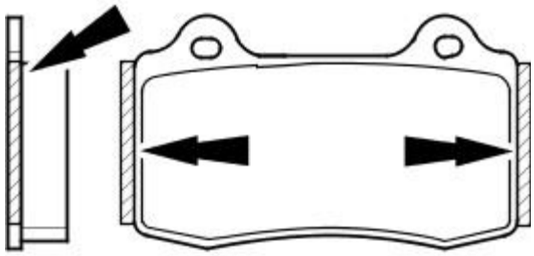

E41081

1. CAUTION: Make sure grease does not contact brake-pad friction surface or brake disc.

To prevent brake squeal apply grease to the shoulders of the brake-pad backplate.
For additional information, refer to: Specifications (206-04 Rear Disc Brake, Specifications).

- Apply a uniform layer of grease to backplate shoulders, making sure the whole shoulder is covered.

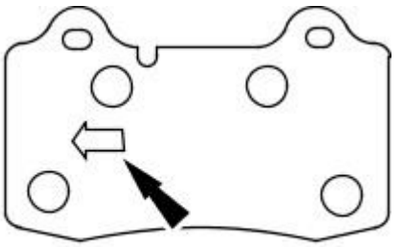

E52793

2. CAUTION: Make sure the brake pads are fitted with the direction arrow following the direction of wheel rotation.

Make sure the brake pads are fitted with the direction arrow following the direction of wheel rotation.

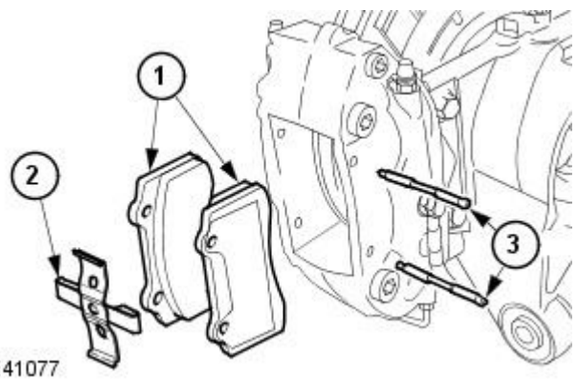

E41077

3. CAUTIONS:

Retracting the caliper piston may cause the fluid reservoir to over-flow. Remove brake fluid spillage immediately from paint work with clean water.

Make sure the brake pads are installed to the correct orientation.

Make sure the brake pads are fitted with the direction arrow following the direction of wheel rotation.

Note the condition of pins and replace if necessary.

• NOTE: Slowly retract caliper pistons.

Install brake pads.

1. Install pads.
2. Position anti-rattle spring.
3. Install pins - make sure pin collets are fully engaged into caliper.

4. Repeat above procedure to install opposite side brake pads.

5. Fit wheels.
For additional information, refer to: Wheel and Tire (204-04 Wheels and Tires, Removal and Installation).

6. Remove stands and lower vehicle.
For additional information, refer to: Using the Workshop Jack (100-02 Jacking and Lifting, General Procedures).

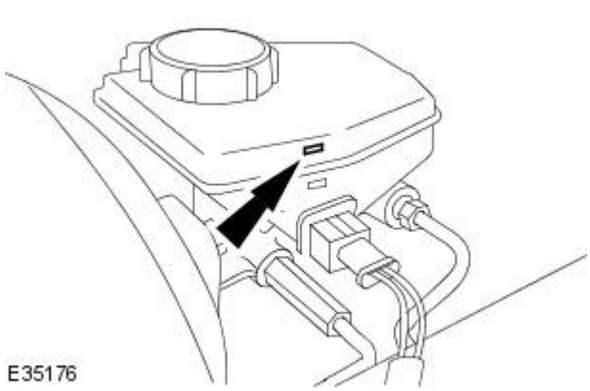

E35176

7. CAUTION: Remove brake fluid spillage immediately from paint work, with clean water.

Check brake fluid level.

- Check brake fluid level is at the maximum mark.
- Remove cloth.
- Fit cap.

8. Remove paint work protection covers, and close engine compartment.

9. Start the engine and repeatedly press the brake pedal until brake pressure is evident.

Parking Brake and Actuation -

Dimensions

• NOTE: When a component reaches its maximum / minimum limit the component must be replaced. Care must be taken when refinishing brake drums that the limits are not exceeded.

Component	Dimension
Parking brake drum - maximum diameter	181 mm
Parking brake shoes - minimum thickness	2 mm

Torques

CAUTION: Replacement of nuts and bolts: Various thread-locking devices are used on nuts and bolts throughout the vehicle. These devices restrict the number of times a nut or bolt can be used. See section 100-00 for information.

Component	Nm
Bolt - parking brake lever to body	22-28
Bolt - pivot to body	22-28
Bolt - relay lever mounting plate to body	22-28
Bolt - relay lever to mounting plate	22-28

Parking Brake and Actuation - Parking Brake

Description and Operation

Parking Brake Components

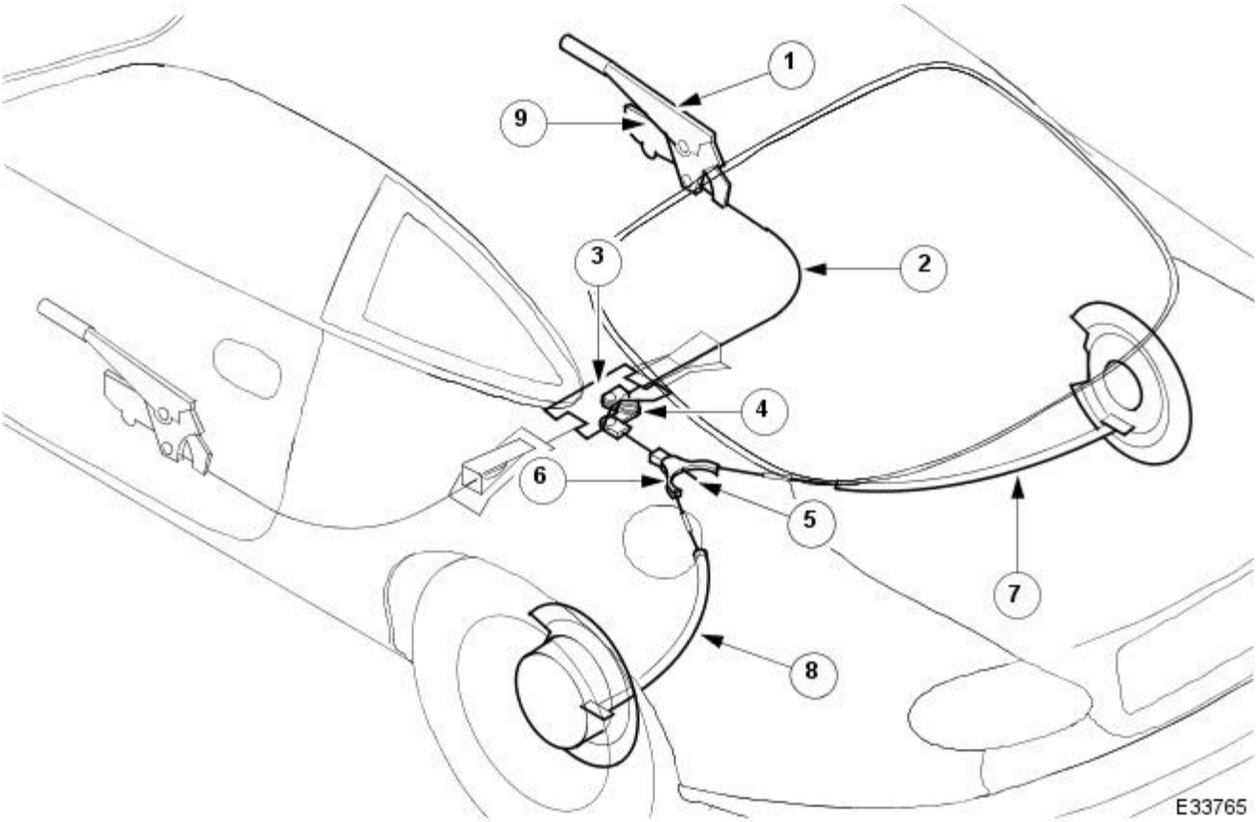

Item	Part Number	Description
1	—	Hand Lever
2	—	Front Cable
3	—	Relay Lever Mounting Plate
4	—	Relay Lever
5	—	Cable Adjuster Rod
6	—	Equalizer
7	—	Rear Cable RH
8	—	Rear Cable LH
9	—	Warning-Light Switch

Description and Operation

The parking-brake hand lever is mounted on the inner sill and incorporates the ratchet mechanism and release button.

The front cable is routed from the hand lever, under the carpet through to an abutment bracket adjacent to the transmission tunnel, and then connected to the relay lever. The relay lever is attached to a mounting plate by a center bolt on which it rotates The relay lever mounting plate straddles the transmission tunnel, the plate is secured by four bolts on the coupe, and eight bolts on the convertible which has a longer plate. The relay lever acts as a center pull system to transmit the force from the hand lever to the rear brakes shoes. The equalizer which is positioned in the center of the rear brake cables balances the force that is applied to the rear brakes.

The rear brake cables are linked together: each cable passes through the suspension subframe and rear hub carrier and connects to a brake shoe expander lever. Application of the parking brake causes the rear cables to pull on the expander levers, the expander lever mechanism rotates on a pivot pin to force the brake shoes outwards to contact the brake drums.

The parking brake cables are adjusted by the rotation of a nut on the adjuster rod. The parking brake shoes are adjusted by means of a manual adjustment mechanism at each set of shoes. Refer to General Procedures in section 206-05.

If the vehicle is driven above 5 km/h with the parking brake applied, a warning lamp and text message will appear on the message center. The message clears when the brake is released or the speed drops below 3 km/h.

Parking Brake Shoe Arrangement

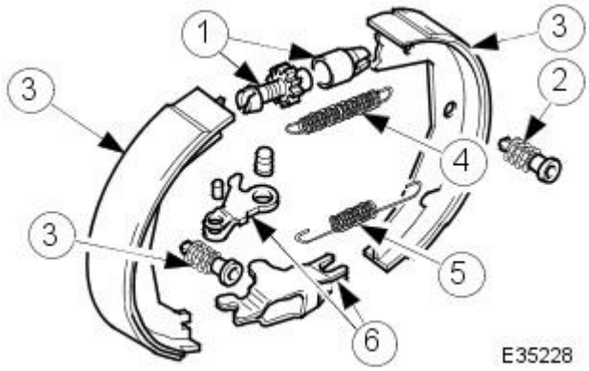

Item	Part Number	Description
1	—	Adjuster Mechanism
2	—	Retaining Pins
3	—	Brake Shoes
4	—	Upper Return Spring
5	—	Lower Return Spring
6	—	Expander Lever Mechanism

- The adjuster mechanism enables manual adjustment of the brake shoes.
- Retaining pins keep the shoes in contact with the dust shield.
- The brake shoes locate into the expander lever and the adjuster mechanism.
- Return springs retract the brake shoes when the parking brake is released.
- The expander lever mechanism moves the brake shoes outwards, in contact with the brake drum when the parking brake is applied.

Parking Brake and Actuation - Parking Brake Cable Adjustment

General Procedures

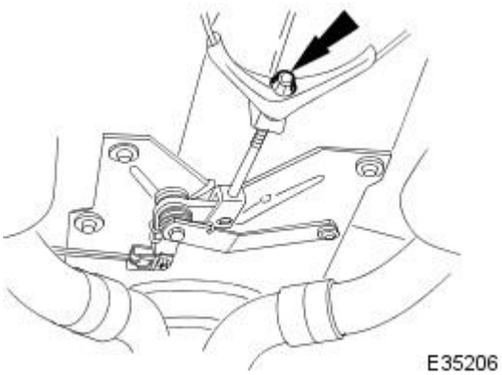

1. Raise rear of vehicle and support on stands. See section 100-02.

2. Make sure gear selector is in the neutral (N) position.

3. Adjust parking brake cable.

- Rotate adjusting nut, until the parking brake can be applied by raising the parking brake lever 3 to 5 clicks.

4. CAUTION: Make sure that the rear wheels rotate freely when the parking brake lever is released.

Remove stands and lower vehicle.

Parking Brake and Actuation - Parking Brake Shoe and Lining Adjustment

General Procedures

1. Raise rear of vehicle and support on stands. See section 100-02.
2. Remove both rear wheels.
3. Make sure that the parking brake lever is released, and the gear selector lever is in the neutral (N) position.
4. Align brake disc access hole with parking brake adjuster.
   - Install three wheel nuts to secure brake disc to hub. Tighten nuts to 20 Nm.
   - Remove plug from access hole.
   - Rotate brake disc until access hole is aligned with adjuster.

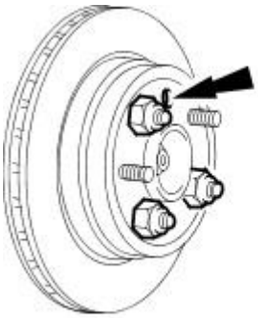

E33772

5. Using a flat-bladed screwdriver rotate the adjuster counter-clockwise until the brake disc cannot be rotated.

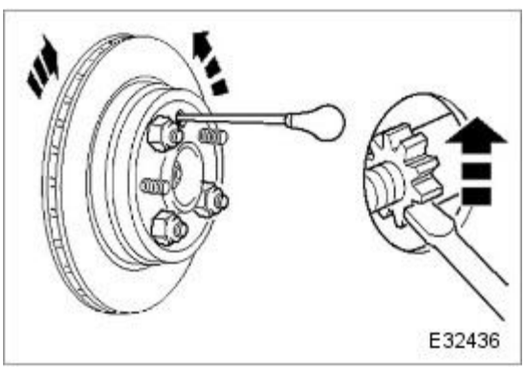

E32436

6. NOTE: The brake shoe return-spring next to the adjuster prevents the adjuster from rotating under normal operating conditions. Make sure that the spring is seated between the adjuster spokes, when brake adjustment is complete.

   Rotate the adjuster gradually clockwise until the brake disc rotates freely.

   - Install plug to access hole.

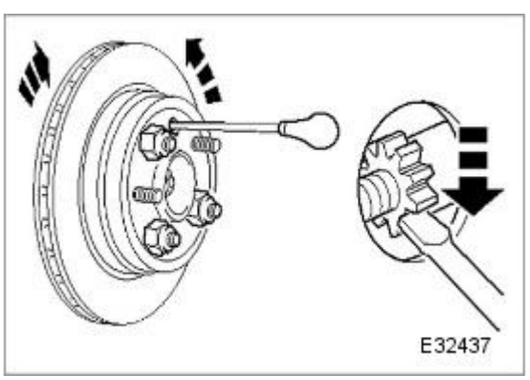

E32437

7. Repeat parking brake setting procedure on opposite-side of vehicle.

8. CAUTION: Make sure that the rear wheels rotate freely when the parking brake lever is released.

   Adjust parking brake cable.

   - Rotate adjusting nut, until the parking brake can be applied by raising the parking brake lever 3 to 5 clicks.

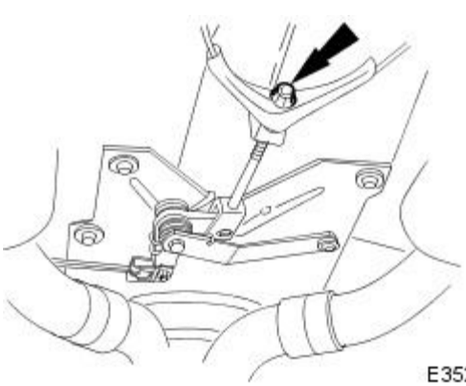

E35206

9. Remove wheel nuts.
10. Fit rear wheels. See section 204-04.
11. Remove stands and lower vehicle.

Parking Brake and Actuation - Parking Brake Control

Removal and Installation

Removal

WARNING: BRAKE DUST, IF INHALED CAN DAMAGE YOUR HEALTH. ALWAYS REMOVE BRAKE DUST USING A VACUUM BRUSH. DO NOT USE A COMPRESSED-AIR LINE TO DISPERSE BRAKE DUST INTO THE ATMOSPHERE.

CAUTION: Replacement of nuts and bolts: Various thread-locking devices are used on nuts and bolts throughout the vehicle. These devices restrict the number of times a nut or bolt can be used. See section 100-00 for information.

1. Remove the driver side front seat.
For additional information, refer to Section 501-10 Seating.

2. Remove the parking brake control shroud.
For additional information, refer to Parking Brake Control Shroud - in this section.

3. Raise rear of vehicle and support on stands.
For additional information, refer to Section 100-02 Jacking and Lifting.

4. Slacken brake cable, adjustment nut.

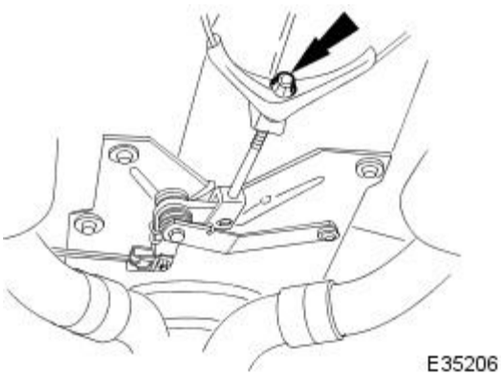

5. NOTE: Spacers and washers (if installed) are used to seat the hand lever. For installation purposes note the number and position of the washers that are removed from each bolt.

Remove bolts securing hand lever to body.

1. Remove bolts.
2. Collect spacers and washers (if installed).

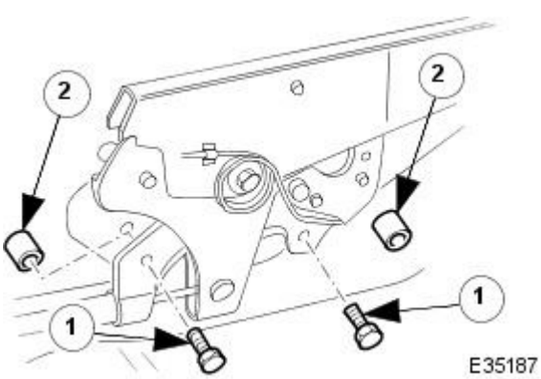

6. NOTE: For installation purposes note the number of washers (if installed) that are removed from the bolt.

Release hand lever from body.

- Undo pivot bolt (the pivot bolt remains captive in lever).
- Collect washers (if installed).

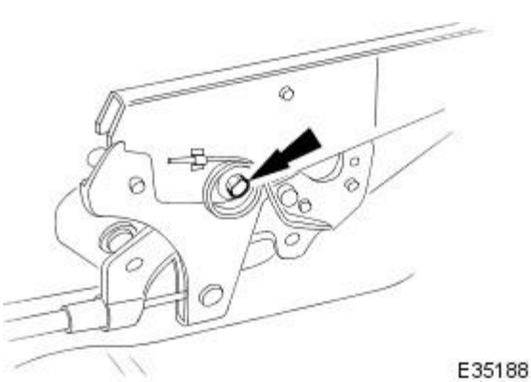

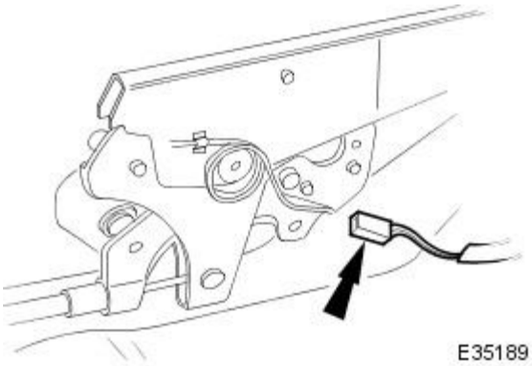

7. Disconnect parking-brake, warning-light switch connector.

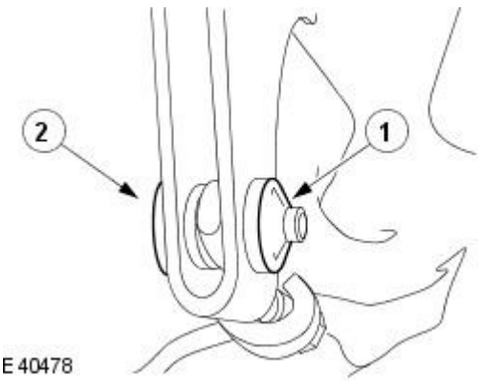

8. Remove the parking brake front cable retaining pin.

1. Remove and discard the parking brake front cable retaining clip.
2. Remove the parking brake front cable retaining pin.

- Remove the parking brake front cable retaining pin spacers.

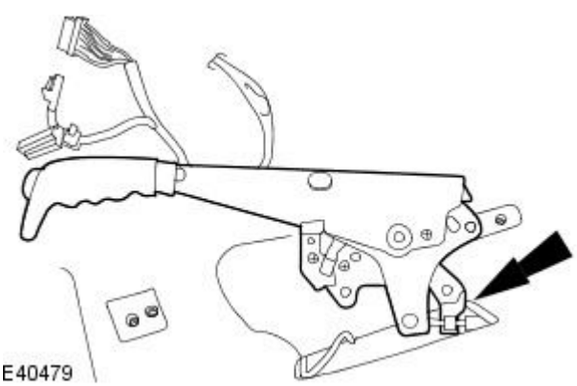

9. Remove the parking brake control.

- Disconnect the parking brake front cable.

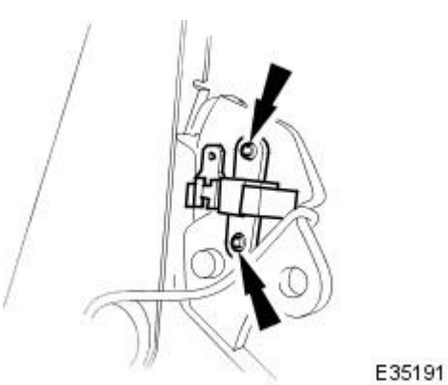

10. Remove warning-light switch from lever.

- Remove screws.

Installation

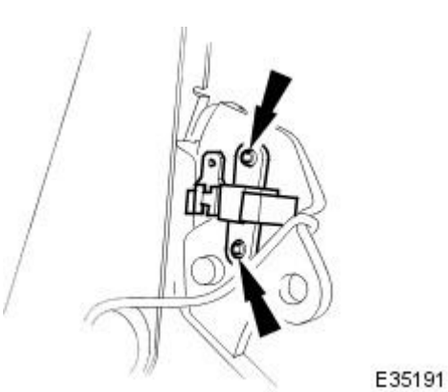

1. Install warning-light switch to hand lever.

- Install and tighten screws.

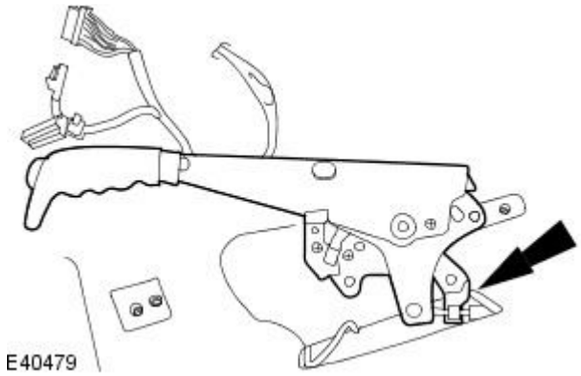

2. NOTE: Connect the parking brake front cable.

Install the parking brake control.

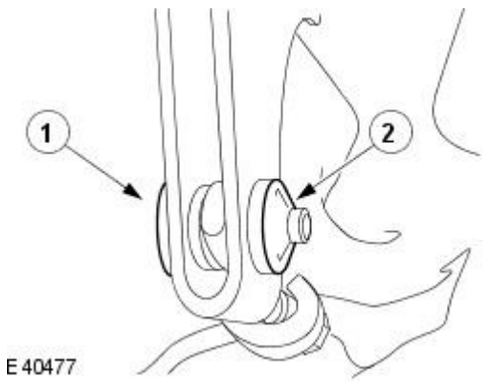

3. NOTE: Install the parking brake front cable retaining pin spacers.

Install a new parking brake front cable retaining clip.

1. Install the parking brake front cable retaining pin.
2. Install a new parking brake front cable retaining clip.

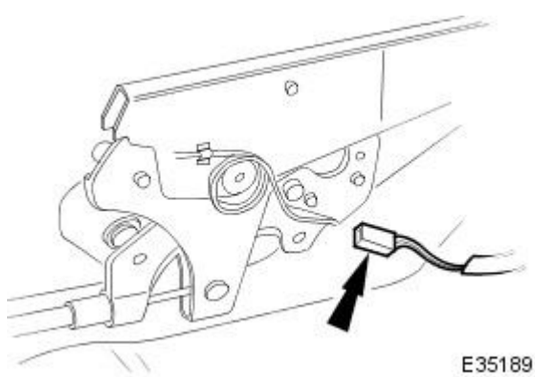

4. Connect warning-light switch connector.

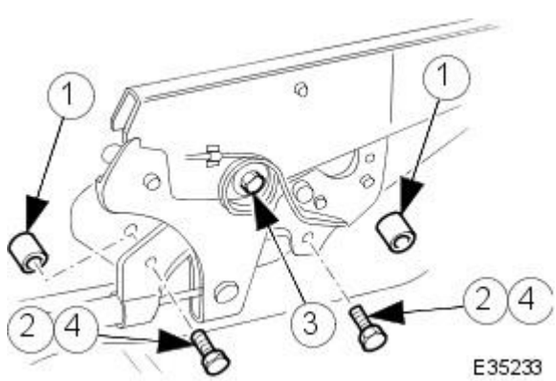

5. Install parking-brake lever to body.

1. Position spacers, and washers (if installed).
2. Install bolts: do not tighten bolts at this stage.
3. Tighten pivot bolt to 22-28 Nm.
4. Tighten remaining bolts to 22-28 Nm.

6. Adjust the parking brake cable.
For additional information, refer to Parking Brake Cable Adjustment - in this section.

7. Remove stands and lower vehicle.

8. Install the parking brake control shroud.
For additional information, refer to Parking Brake Control Shroud - in this section.

9. Install the driver side front seat.
For additional information, refer to Section 501-10 Seating.

Parking Brake and Actuation - Parking Brake Control Shroud

Removal and Installation

Removal

1. Position parking brake lever fully fully upright.
2. Release brake lever trim press stud.

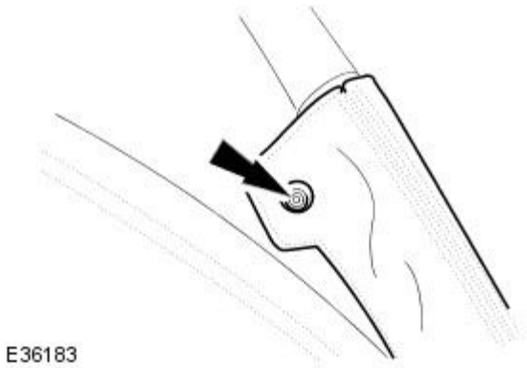

3. Release cover trim securing clip from brake lever and remove cover trim.

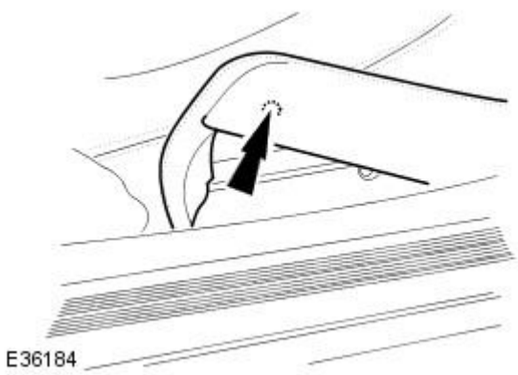

Installation

1. With parking brake lever in the fully up position, install cover trim on lever.
2. Secure cover trim clip to brake lever.
3. Fasten cover trim press stud.
4. Return brake lever to down position.

Parking Brake and Actuation - Parking Brake Front Cable

Removal and Installation

Removal

CAUTION: Replacement of nuts and bolts: Various thread-locking devices are used on nuts and bolts throughout the vehicle. These devices restrict the number of times a nut or bolt can be used. See section 100-00 for information.

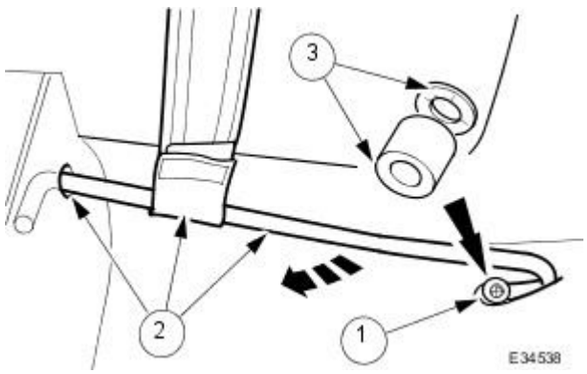

1. Remove the parking brake control.
   For additional information, refer to Parking Brake Control - in this section.
2. Remove the lower slider bar of the driver side seat belt.
   1. Remove bolt.
   2. Remove slider bar from body grommet and seat belt loop.
   3. Collect spacer and card washer.

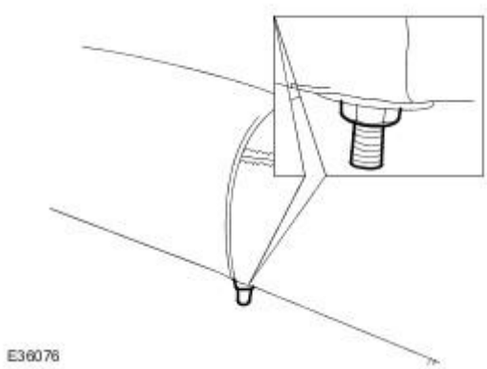

3. Raise rear seat cushion on driver's side of vehicle for access to carpet.
   - Remove nuts securing seat cushion to body
   - Raise seat cushion.

4. Reposition carpet to gain access to parking brake cable.
5. Raise vehicle.
6. Loosen parking brake cable, adjustment nut.

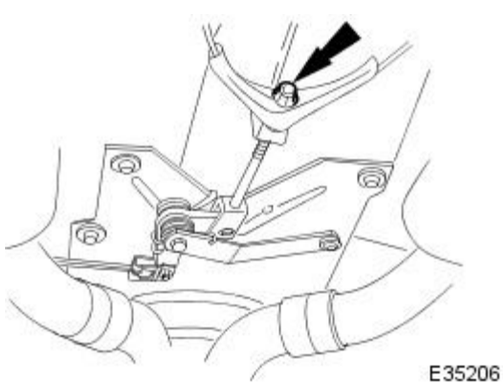

7. Release parking brake cable from relay-lever fork.

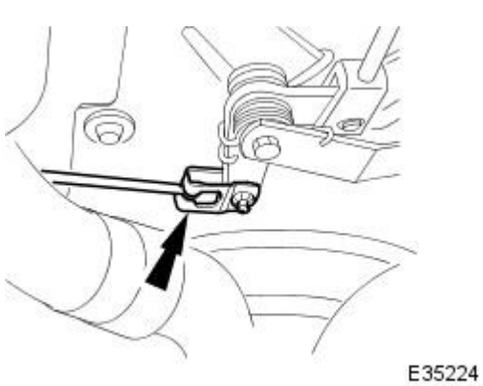

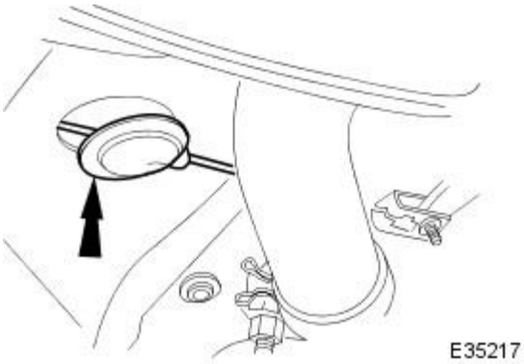

8. Remove body grommet from cable.

- Remove grommet from body.
- Remove grommet from cable.

9. Lower vehicle.

10. Remove the parking brake cable.

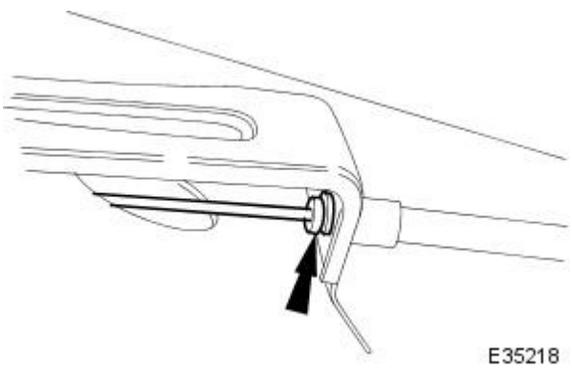

11. Clean components and mating surfaces.

Installation

1. Lay cable in vehicle in its installed position.

2. Install the parking brake cable.

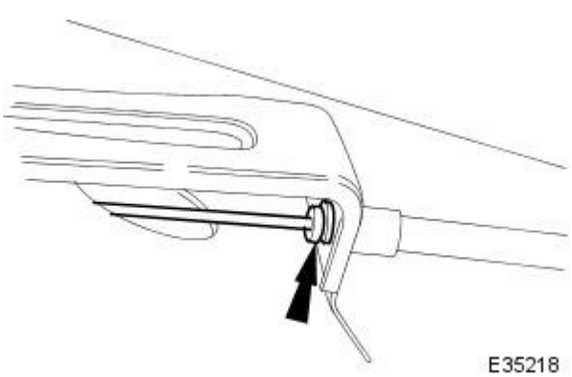

3. Raise vehicle.

4. Install body grommet.

- Install grommet to cable.
- Install grommet to body.

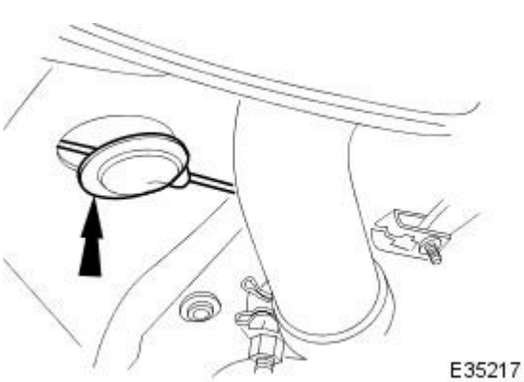

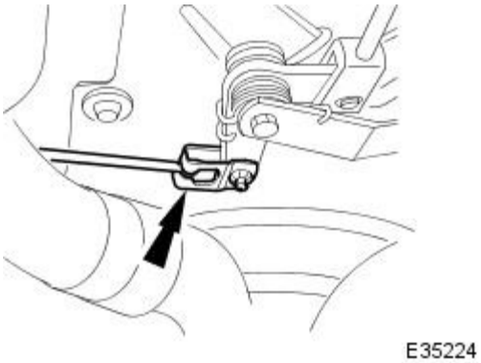

5. Connect cable to relay-lever fork.

6. Lower vehicle.

7. Reposition carpet under rear seat cushion.

8. Reposition rear seat cushion.

- Install nuts and tighten to 5-7 Nm.

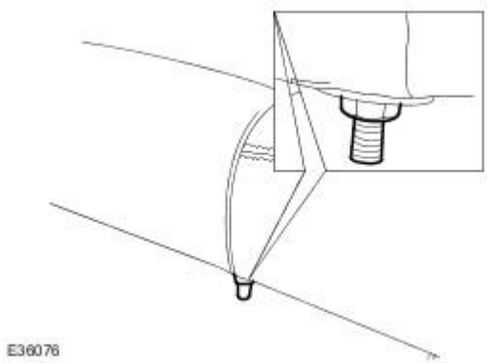

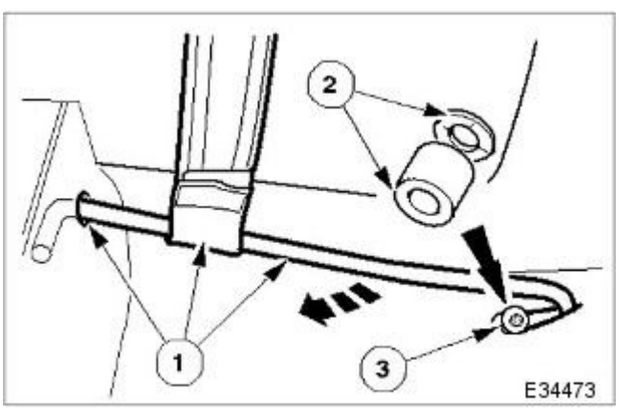

9. Install the lower slider bar of the driver side seat belt.

1. Insert slider bar through seat belt loop and body grommet.
2. Position spacer and card washer.
3. Install bolt and tighten to 34-46 Nm.

10. Install parking brake control.
For additional information, refer to Parking Brake Control - in this section.

Parking Brake and Actuation - Parking Brake Linkage Lever

Removal and Installation

Removal

CAUTION: Replacement of nuts and bolts: Various thread-locking devices are used on nuts and bolts throughout the vehicle. These devices restrict the number of times a nut or bolt can be used. See section 100-00 for information.

1. Position vehicle on a four-post lift.

2. Make sure parking brake is fully released.

3. Remove equalizer.

1. Remove adjustment nut.
2. Remove equalizer from adjustment rod and cable.
3. Remove damper.

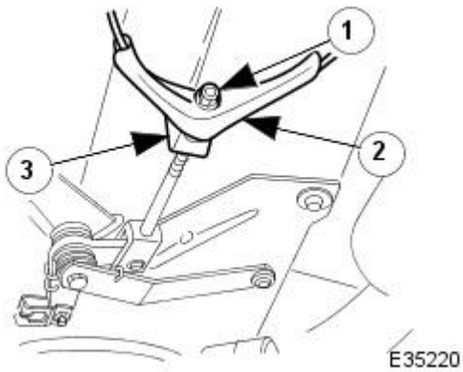

4. Release front parking-brake cable from relay-lever fork.

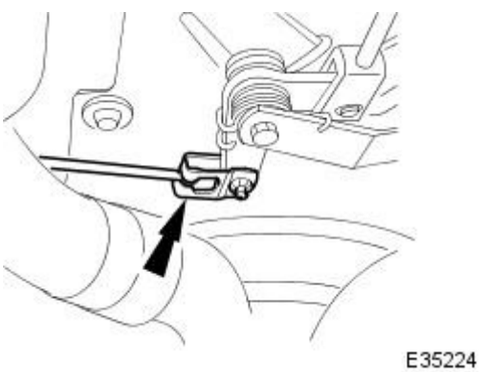

5. CAUTION: Be aware of the spring torsion when removing components from the relay lever.

Remove components to access relay lever.

1. Remove bolts.
2. Unhook return spring and remove tie strap.
3. Collect bush from relay lever.
4. Remove lower return spring.
5. Remove relay lever.
6. Remove upper return spring.

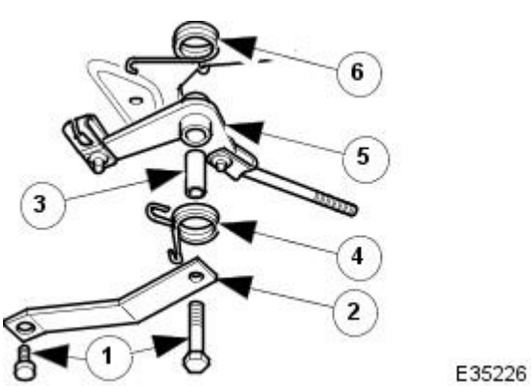

6. Remove components from relay lever.

1. Remove clip and clevis pin.
2. Remove adjuster -mechanism fork.
3. Remove clip and clevis pin.
4. Remove front-cable fork.

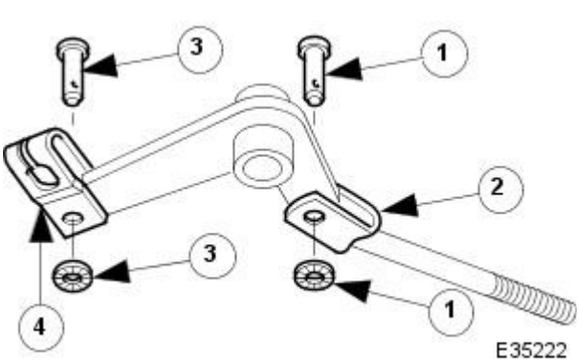

7. Clean components and mating surfaces.

Installation

1. NOTE: Make sure return-spring legs are located correctly after

installation.

• NOTE: Apply grease to clevis pins and relay lever.

Installation is reversal of the removal procedure.

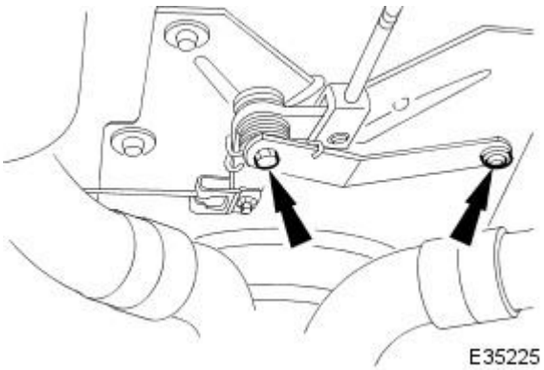

2. Tighten bolts.

1. Tighten bolts to 22-28 Nm.

3. Adjust parking-brake cable. Refer to operation 70.35.10.

Parking Brake and Actuation - Parking Brake Linkage Lever Mounting Plate

Removal and Installation

Removal

1. Remove the front muffler.
For additional information, refer to Section 309-00 Exhaust System.

2. Remove the parking brake cable adjustment nut.

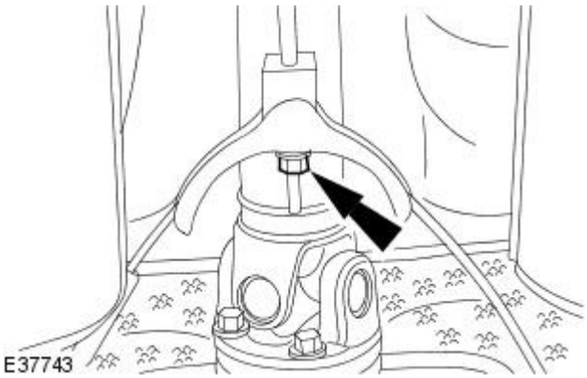

3. Remove the parking brake cable retaining equalizer.

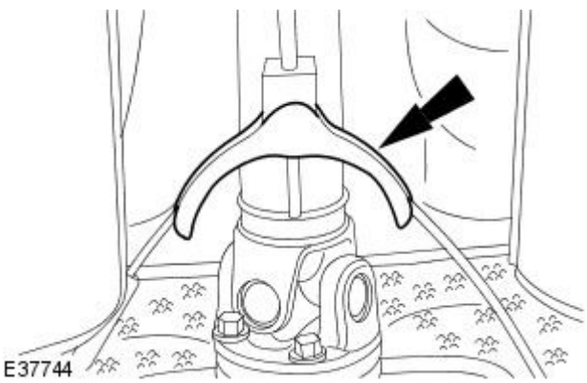

4. Detach the parking brake front cable.

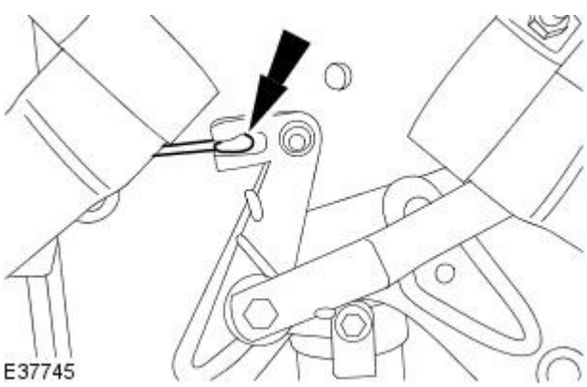

5. Detach the driveshaft center bearing.

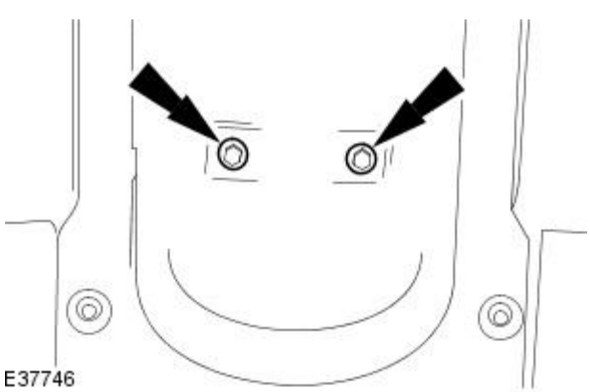

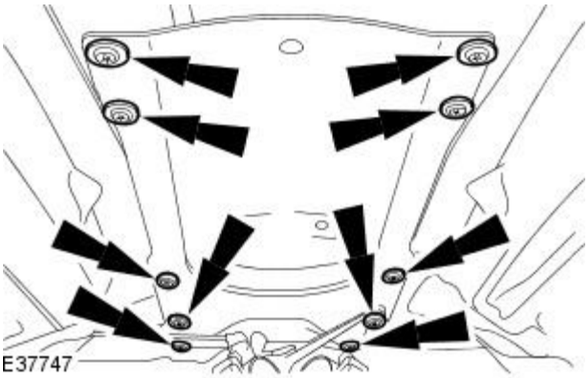

6. Remove the parking brake linkage lever mounting plate.

Installation

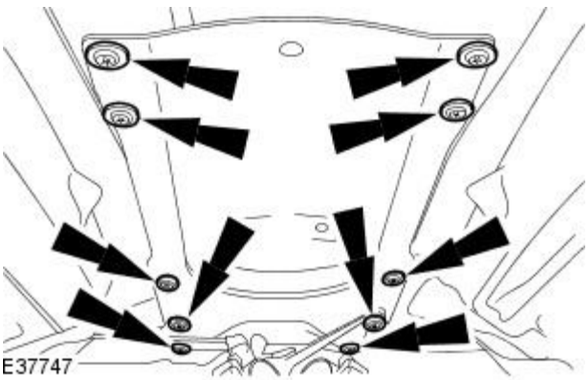

1. Install the parking brake linkage lever mounting plate.

- Tighten to 25 Nm.

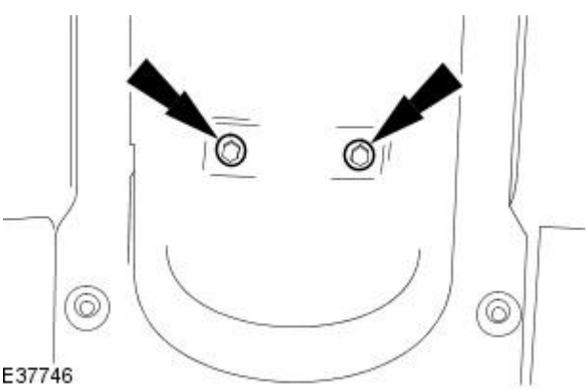

2. Attach the driveshaft center bearing.

- Tighten to 25 Nm.

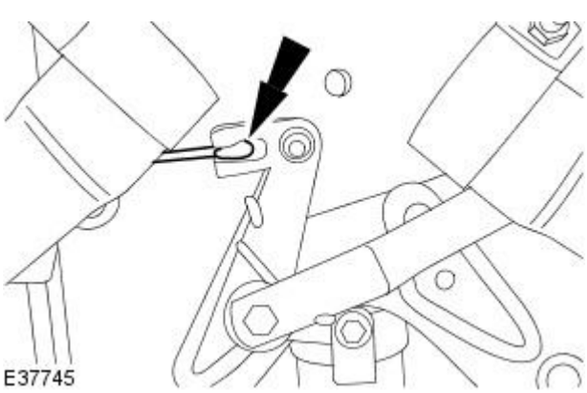

3. Attach the parking brake front cable.

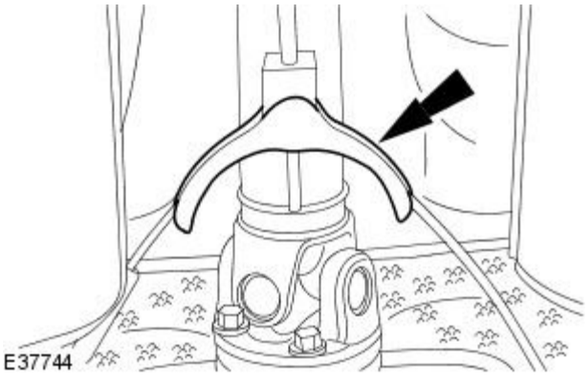

4. Install the parking brake cable retaining equilizer.

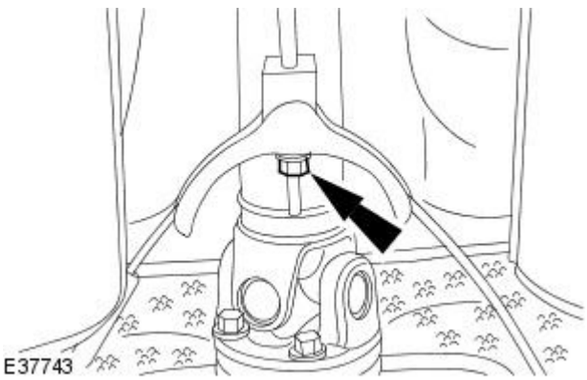

5. Loosely install the parking brake cable adjustment nut.

6. Install the front muffler.
For additional information, refer to Section 309-00 Exhaust System.

7. Adjust the parking brake cable.
For additional information, refer to Parking Brake Cable Adjustment - in this section.

Parking Brake and Actuation - Parking Brake Linkage Return Springs

Removal and Installation

Removal

CAUTION: Replacement of nuts and bolts: Various thread-locking devices are used on nuts and bolts throughout the vehicle. These devices restrict the number of times a nut or bolt can be used. See section 100-00 for information.

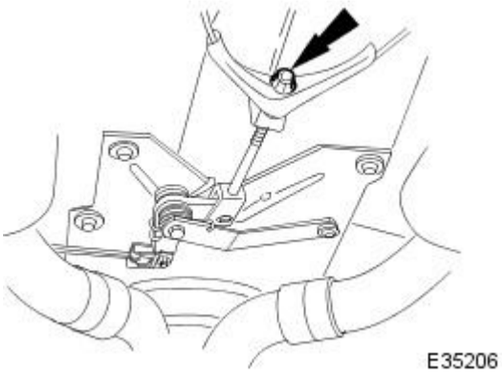

1. Position vehicle on a four-post lift.

2. Make sure parking brake is fully released.

3. Slacken parking-brake cable, adjustment nut.

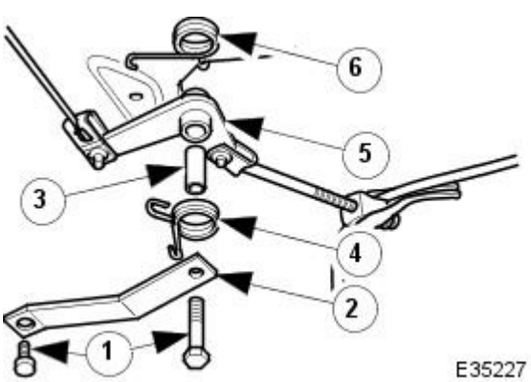

4. CAUTION: Be aware of the spring torsion when removing components.

Remove components to access return springs..

1. Remove bolts.
2. Unhook return spring and remove tie strap.
3. Collect bush from relay lever.
4. Remove lower return spring.
5. Lower relay lever.
6. Remove upper return spring.

5. Clean components and mating surfaces.

Installation

1. NOTE: Make sure return-spring legs are located correctly after installation.

Installation is reverse of removal procedure.

2. Tighten bolts.

1. Tighten bolt to 22-28 Nm.

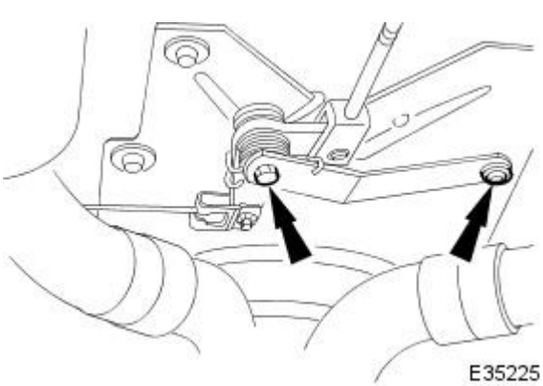

3. Adjust parking-brake cable. Refer to operation 70.35.10.

Parking Brake and Actuation - Parking Brake Linkage Rod

Removal and Installation

Removal

CAUTION: Replacement of nuts and bolts: Various thread-locking devices are used on nuts and bolts throughout the vehicle. These devices restrict the number of times a nut or bolt can be used. See section 100-00 for information.

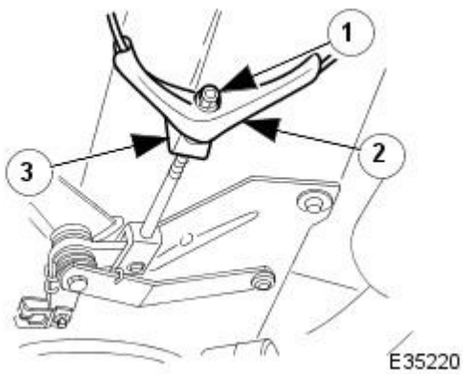

1. Position vehicle on a four-post lift.

2. Make sure parking brake is fully released.

3. Remove equalizer from rear parking-brake cable.

1. Remove adjustment nut.
2. Remove equalizer from adjustment rod and cable.
3. Remove damper.

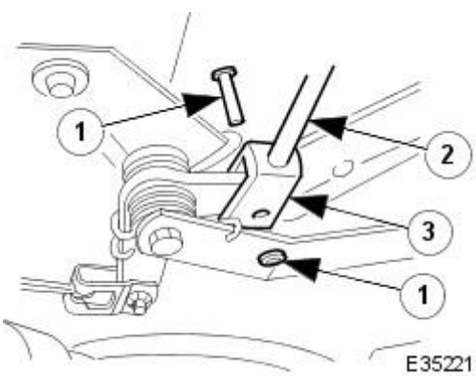

4. Remove adjuster assembly from relay.

1. Remove clip and clevis pin.
2. Remove adjustment rod.
3. Remove fork-end from adjustment rod.

Installation

1. Installation is the reverse of the removal procedure.

2. Adjust parking-brake cable. Refer to operation 70.35.10.

Parking Brake and Actuation - Parking Brake Rear Cables

Removal and Installation

Removal

• NOTE: The procedure shown is for the parking brake left-hand rear cable, the procedure is the same for the parking brake right-hand rear cable.

1. Remove the parking brake shoes.
For additional information, refer to Parking Brake Shoes in this section.

2. Loosen the parking brake cable adjustment nut.

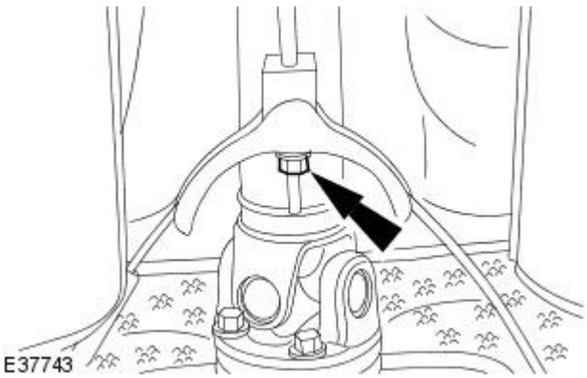

3. Detach the parking brake rear cable from the connector.

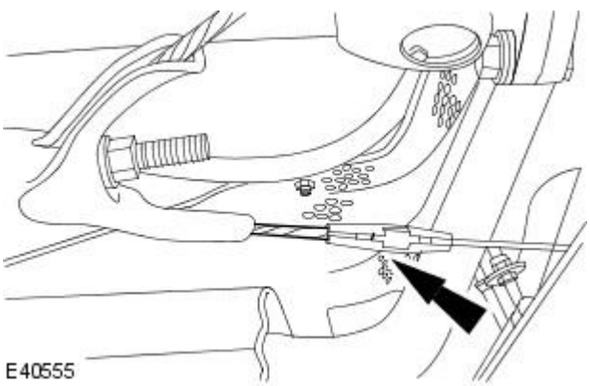

4. Detach the parking brake rear cable from the equilizer.

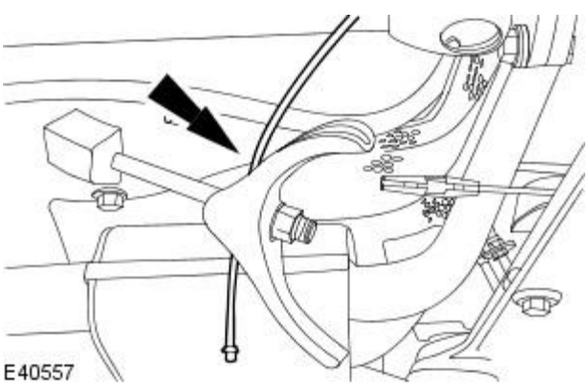

5. Remove the parking brake rear cable retaining clip.

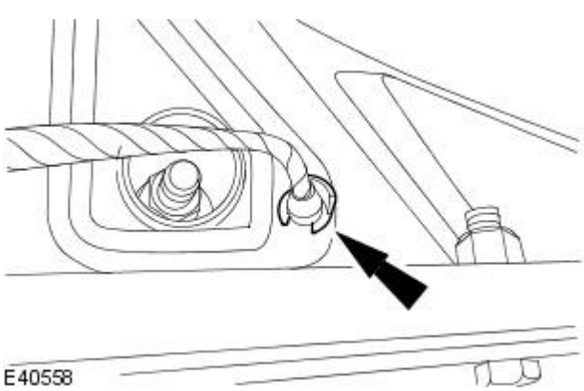

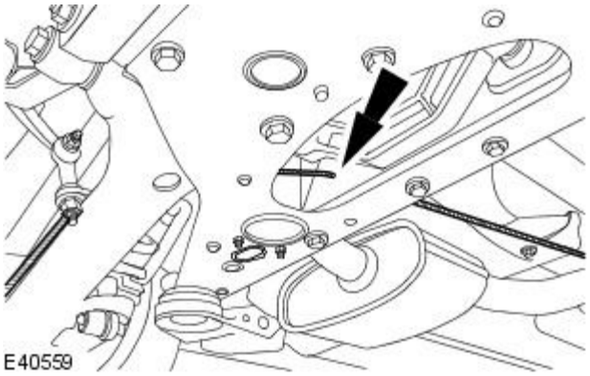

6. Detach the parking brake rear cable from the rear axle crossmember.

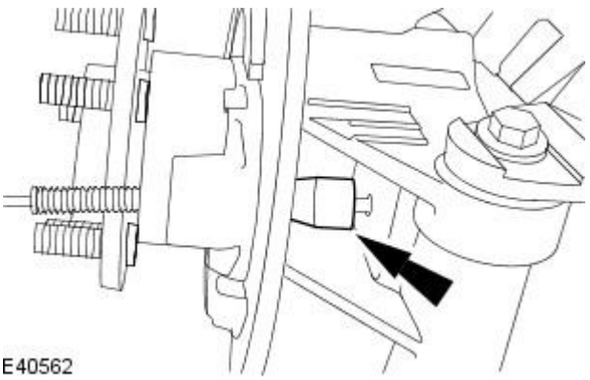

7. Remove the parking brake rear cable retaining clip.

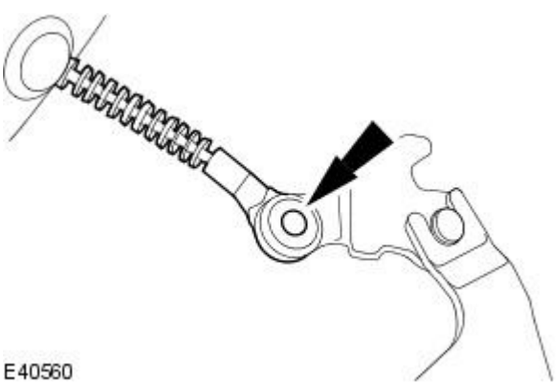

8. Remove the parking brake shoes expander assembly.

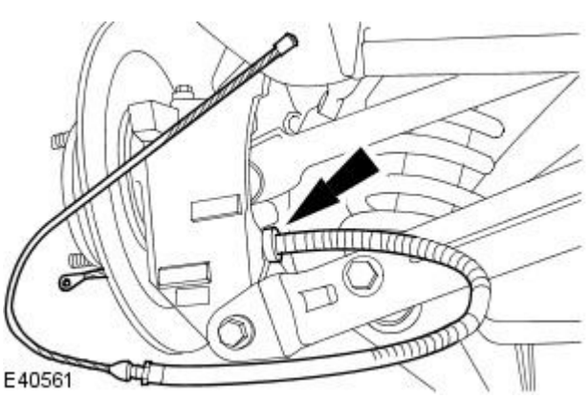

9. Remove the parking brake rear cable.

Installation

1. To install, reverse the removal procedure.

Parking Brake and Actuation - Parking Brake Shoes

Removal and Installation

Removal

WARNING: BRAKE DUST, IF INHALED CAN DAMAGE YOUR HEALTH. ALWAYS REMOVE BRAKE DUST USING A VACUUM BRUSH. DO NOT USE A COMPRESSED-AIR LINE TO DISPERSE BRAKE DUST INTO THE ATMOSPHERE.

CAUTION: Replacement of nuts and bolts: Various thread-locking devices are used on nuts and bolts throughout the vehicle. These devices restrict the number of times a nut or bolt can be used. See section 100-00 for information.

1. Open engine compartment and fit paint work protection covers to fenders.
2. Raise rear of vehicle and support on stands.
   For additional information, refer to Section 100-02 Jacking and Lifting.
3. Remove both rear wheels.
   For additional information, refer to Section 204-04 Wheels and Tires.
4. Remove both rear brake discs.
   For additional information, refer to Section 206-04 Rear Disc Brake.
5. Loosen parking brake cable adjustment nut.

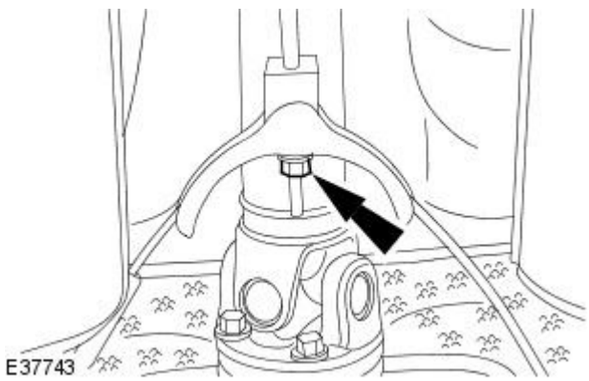

6. Remove front shoe retaining pin.
   - Align hub access hole with retaining pin.
   - Turn pin until it releases from backing plate.

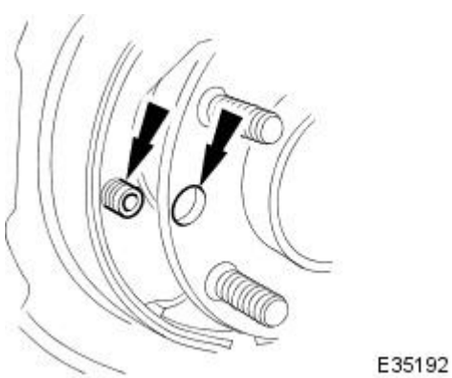

7. Remove adjuster assembly.
   - Move front shoe forwards.
   - Remove adjuster assembly.

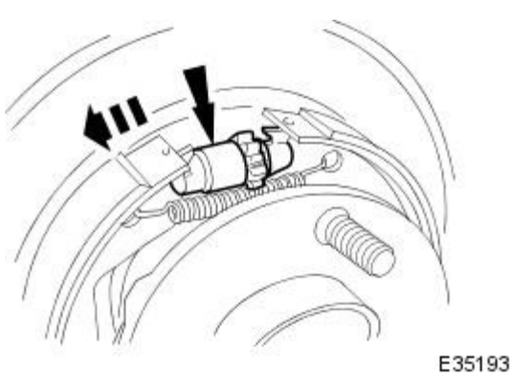

8. Remove the parking brake shoes upper return spring.

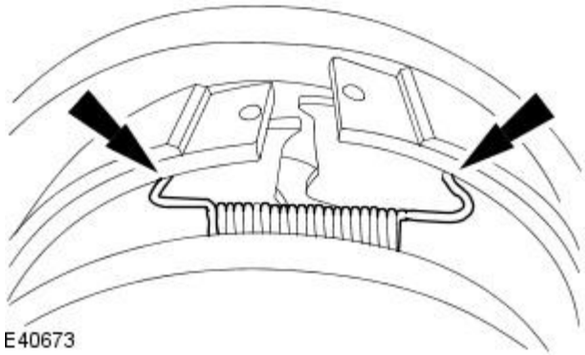

E40673

9. Remove rear shoe retaining pin.

- Align hub access hole with retaining pin.
- Turn pin until it releases from backing plate.

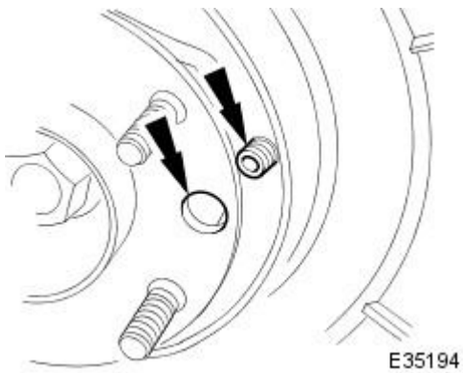

E35194

10. Remove brake shoes from parking brake lever-mechanism and remove shoes from vehicle.

11. Remove the parking brake lower return spring.

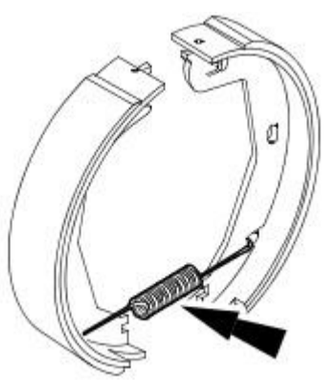

E40672

12. Remove brake dust and clean components, see WARNING above.

13. Repeat procedure to remove parking brake shoes on opposite side of vehicle.

Installation

1. Install the parking brake lower return spring.

E40672

2. Install brake shoes to vehicle.

- Install brake shoes to parking brake lever-mechanism in the arrangement shown.

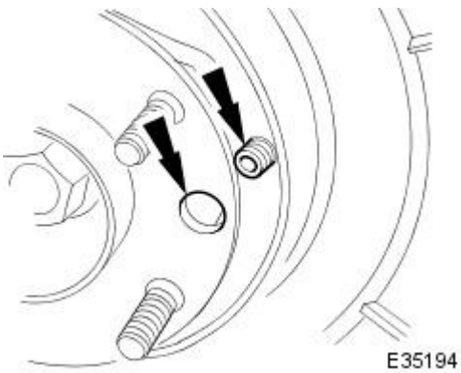

3. NOTE: Make sure retaining pin is seated correctly in backing plate.

Install rear shoe retaining pin.

- Align hub access hole.
- Install retaining pin.

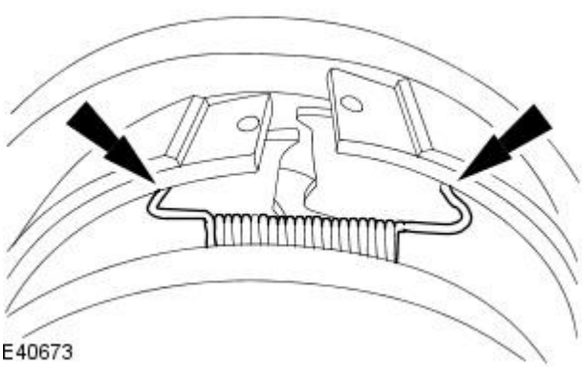

4. Install the parking brake shoes upper return spring.

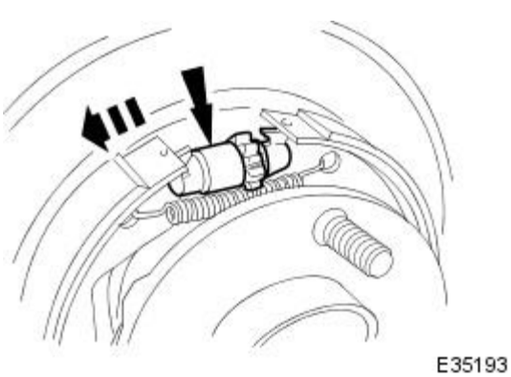

5. Install adjuster assembly.

- Lubricate adjuster mechanism with appropriate grease.
- Move front shoe forwards.
- Install adjuster assembly.

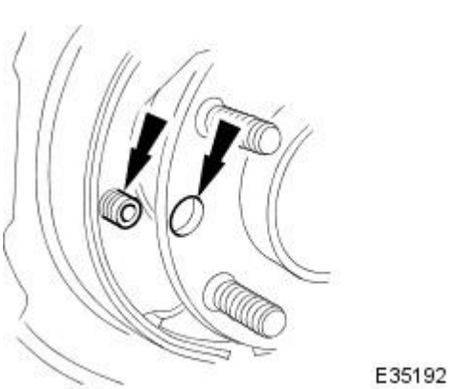

6. NOTE: Make sure retaining pin is seated correctly in backing plate.

Install front shoe retaining pin.

- Align hub access hole.
- Install retaining pin.

7. Make sure brake shoes are seated correctly in adjuster and lever

mechanism.

8. Repeat procedure to install parking brake shoes on opposite side of vehicle.

9. Install both rear brake discs.
   For additional information, refer to Section 206-04 Rear Disc Brake.

10. Adjust parking brake.
    For additional information, refer to Parking Brake Cable Adjustment - in this section.

11. Fit rear wheels.
    For additional information, refer to Section 206-04 Rear Disc Brake.

12. Remove stands and lower vehicle.

Hydraulic Brake Actuation -

Lubricants, Fluids, Sealants and Adhesives

CAUTION: Do not use brake fluid ITT Super Dot 4 on 2006my vehicles onwards. Failure to follow this instruction may result in damage to the vehicle.

• NOTE: Brake fluid ITT Super Dot 4 has now been superseded by Shell ESL Super Dot 4 which is the Jaguar recommended brake fluid. Shell ESL Super Dot 4 can be used on all model years.

Unit	Specification
Brake fluid	ITT Super Dot 4
Brake fluid	Shell ESL Super Dot 4

Torques

Component	Nm
Nut - master cylinder to brake booster	21-29
Nut - brake pedal pivot-pin to pedal housing	15-20
Nut - brake switch to pedal housing	3
Bolt - pedal housing to body	15-20
Nut - pedal housing to body	15-20
Nut - brake booster to pedal housing	22-28

Torques - Brembo Brakes

Component	Nm
Bleed nipple	12-16
Union bolt - brake hose to caliper	22-26

Brake Tube, Hoses and Bracket Torques

CAUTION: Replacement of nuts and bolts: Various thread-locking devices are used on nuts and bolts throughout the vehicle. These devices restrict the number of times a nut or bolt can be used. See section 100-00 for information.

Component	Nm
Bleed nipple - front	4-6
Bleed nipple - rear	8-11
Hose to front caliper	10-14
Union bolt - hose to rear caliper	30-40
M10 hose locknut	15-20
M10 brake tube female-nut	13-17
M10 brake tube male-nut	13-17
M12 brake tube male-nut	15-20
Bolt - 3-way tube connector to body	9-12

Published: 11-May-2011

Hydraulic Brake Actuation - Hydraulic Brake Actuation

Description and Operation

The hydraulic brake system is split in to two independent circuits: the primary circuit operates the front brakes and the secondary circuit operates the rear brakes. This type of system prevents complete brake failure in the event of a brake tube fracture.

The hydraulic brake system consists of the following components:

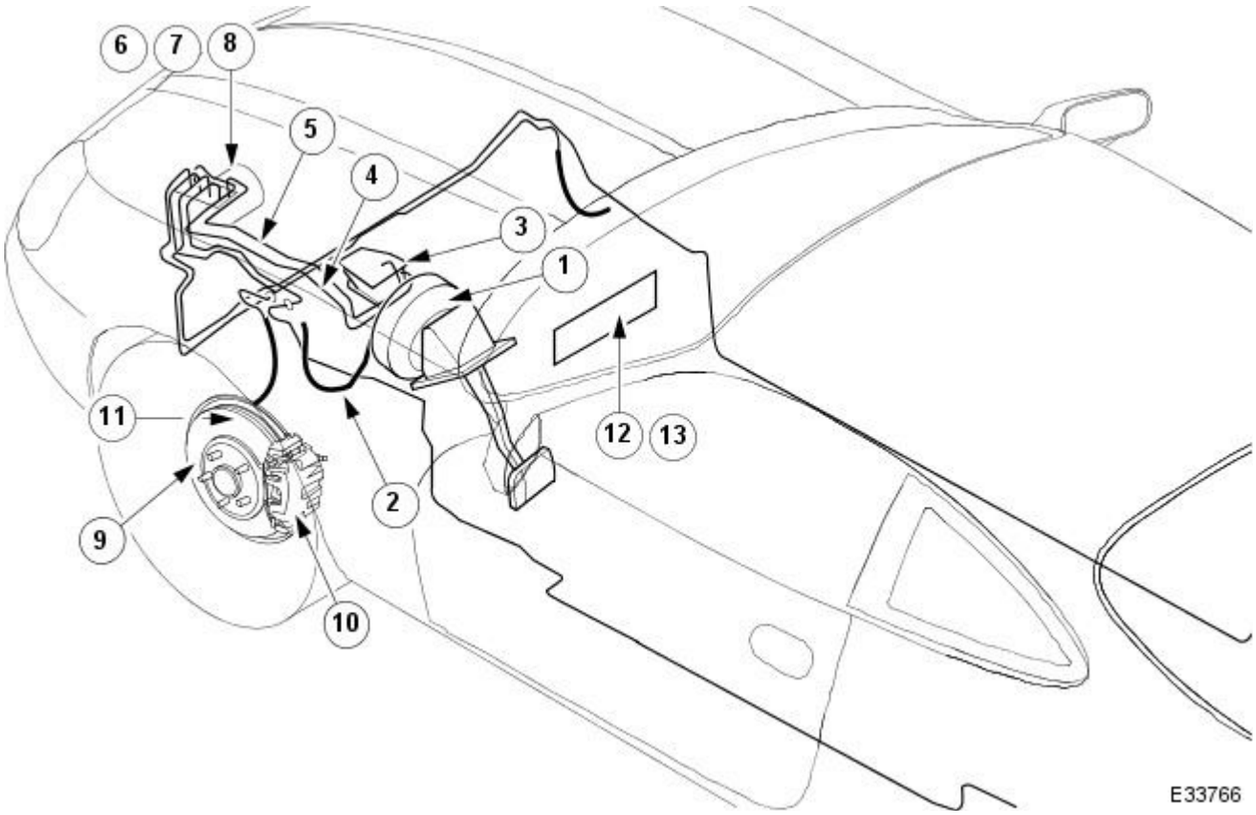

Item	Description
1	Brake pedal, bracket and brake booster assembly
2	Brake booster vacuum hose
3	Brake master cylinder and brake fluid reservior
4	Primary brake circuit
5	Secondary brake circuit
6	Hydraulic control unit (HCU)
7	Valve block
8	Anti-lock brake system (ABS) module
9	Brake disc
10	Brake caliper
11	Wheel speed sensor
12	ABS warning lamp
13	Brake fluid level warning-lamp

Master Cylinder and Reservoir

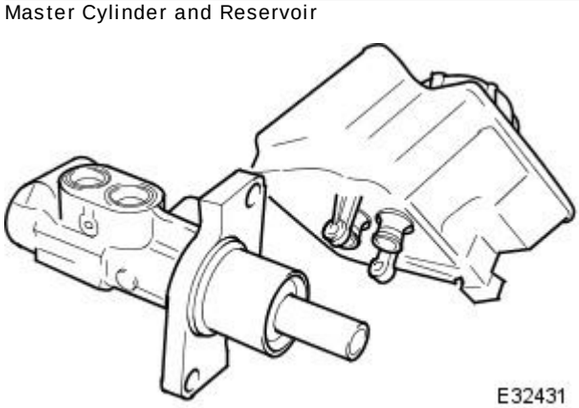

The tandem master cylinder contains two independent pistons, fluid pressure to each brake circuit is controlled by its own individual piston. Brake fluid is supplied to the master cylinder by the reservoir, which is divided into two sections to prevent total fluid loss should one of the circuits fail. A port situated at the bottom of each section of the reservoir supplies the fluid to each piston.

The fluid reservoir has a fluid-level indicator switch installed, which operates when the fluid level is low, causing the brake fluid level warning-lamp to illuminate.

Brake Calipers Vehicles Without: Brembo Brakes

The brake calipers are of the single piston type. The caliper carrier, which is secured to the vertical link by two bolts, carries the single-piston caliper housing. The caliper housing is secured to the caliper carrier by two guide-pins and an anti-rattle spring. When the brakes are applied, the caliper-housing piston pushes the brake pad in front of it, towards the brake disc. This movement forces the caliper housing to

move along the guide-pins, in the opposite direction of the piston, to apply the second brake pad.

Brake Calipers Vehicles With: Brembo Brakes

The four cylinder brake caliper is rigidly attached to the vertical link / hub carrier. The caliper is a split assembly with each side of the caliper, housing two pistons. The two-pairs of opposed pistons act directly on the brake pads mounted one each side of the disc.

Hydraulic Brake Actuation - Brake Fluid Reservoir

Removal and Installation

Removal

• CAUTIONS:

Replacement of nuts and bolts: Various thread-locking devices are used on nuts and bolts throughout the vehicle. These devices restrict the number of times a nut or bolt can be used. See section 100-00 for information.

Remove brake fluid spillage immediately from paint work, with clean water.

1. Position vehicle on a four-post lift.
2. Open engine compartment and fit paint work protection covers to fenders.
3. Disconnect battery ground cable (IMPORTANT, see operation 86.15.19 for further information).
4. Remove windshield wiper arm and blade assembly for access. Refer to operation 84.15.44.90.
5. Remove plenum cover for access. Refer to operation 76.10.01.
6. Remove pedal housing, brake booster and master cylinder assembly. Refer to operation 70.35.39.
7. Remove reservoir filler cap and empty residual brake fluid into a container. Refit cap.
8. Remove fluid reservoir from master cylinder.
   - Remove locating pin.
   - Pull reservoir from master cylinder.

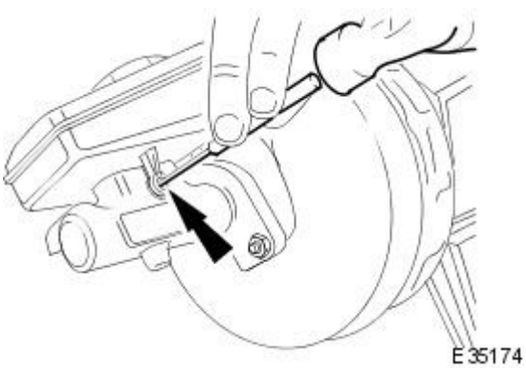

9. Install plugs into fluid reservoir ports.

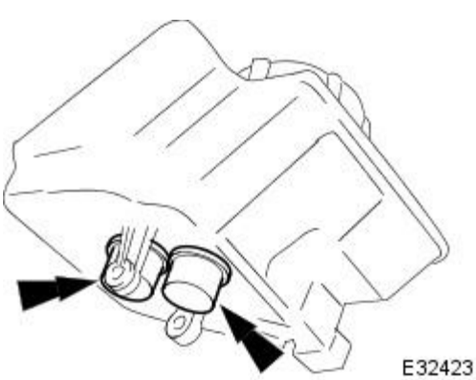

10. Remove and discard seals from master cylinder.

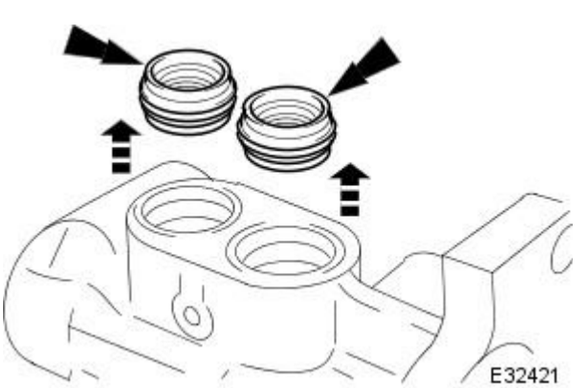

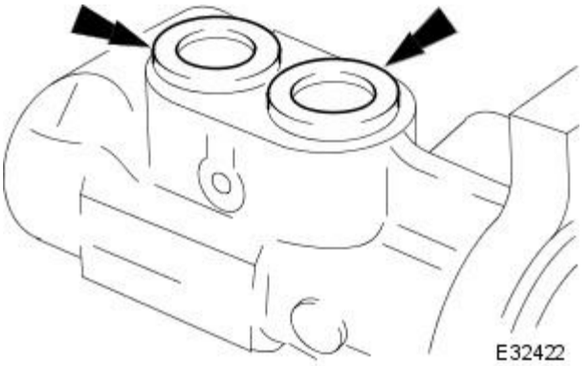

11. Install plugs into master cylinder ports.

12. Clean components and mating surfaces.

Installation

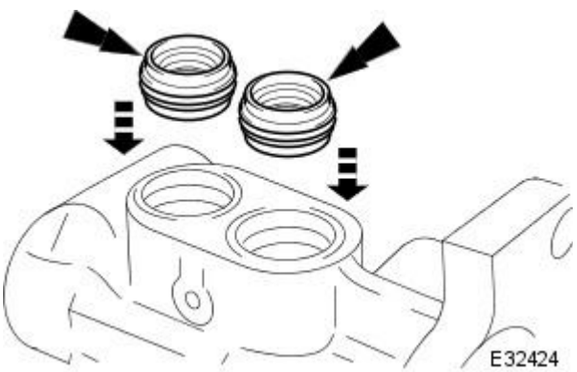

1. Install seals into master cylinder.

- Remove plugs.
- Lubricate seals with clean brake fluid.
- Install seals.

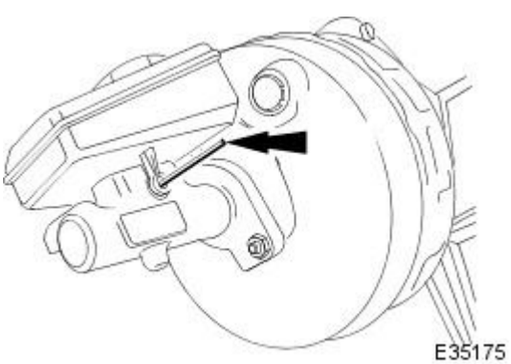

2. Install reservoir to master cylinder.

- Remove plugs.
- Install reservoir, making sure reservoir is fully seated.
- Install locating pin.

3. Install pedal housing, brake booster and master cylinder assembly. Refer to operation 70.35.39.

4. Install plenum cover. Refer to operation 76.10.01.

5. Install windshield wiper arm and blade assembly. Refer to operation 84.15.44.90.

6. Reconnect battery ground cable (IMPORTANT, see operation 86.15.15 for further information).

7. Bleed brake system. Refer to operation 70.25.03.

8. Remove paint-work protection covers and close engine compartment.

Hydraulic Brake Actuation - Brake Master Cylinder

Removal and Installation

Removal

• CAUTIONS:

Replacement of nuts and bolts: Various thread-locking devices are used on nuts and bolts throughout the vehicle. These devices restrict the number of times a nut or bolt can be used. See section 100-00 for information.

Remove brake fluid spillage immediately from paint work, with clean water.

1. Position vehicle on a four-post lift.
2. Open engine compartment and fit paint work protection covers to fenders.
3. Disconnect battery ground cable (IMPORTANT, refer to operation 86.15.19 for further information).
4. Remove windshield wiper arm and blade assembly for access. Refer to operation 84.15.44.90.
5. Remove plenum cover for access. Refer to operation 76.10.01.
6. Remove pedal housing, brake booster and master cylinder assembly. Refer to operation 70.35.39.
7. Remove nuts securing master cylinder to brake booster.

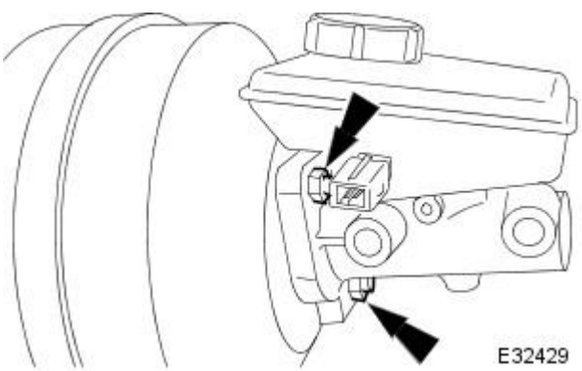

8. Remove master cylinder from brake booster.
   - Remove master cylinder.
   - Remove and discard seal.
   - Remove filler cap and empty residual brake fluid into a container.

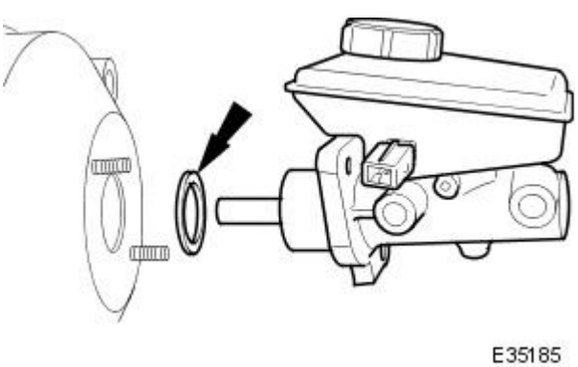

9. Remove fluid reservoir from master cylinder.
   - Remove locating pin.
   - Pull reservoir from master cylinder.

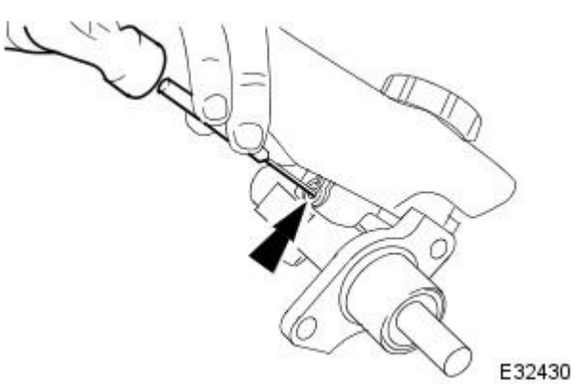

10. Install plugs into reservoir ports.

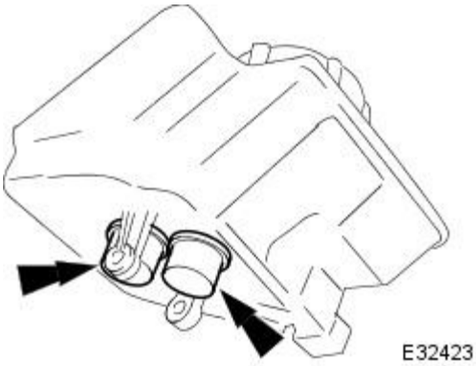

11. Remove and discard seals from master cylinder.

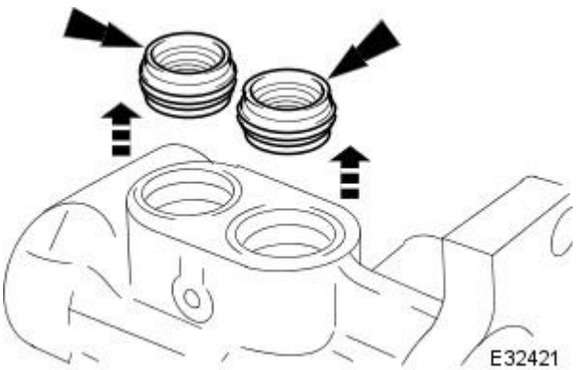

12. Install plugs into master cylinder ports.

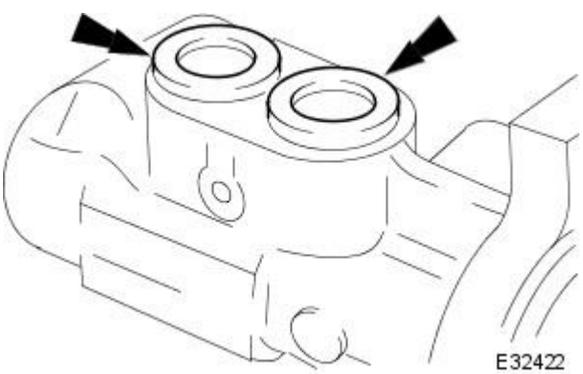

13. Clean components and mating surfaces.

Installation

1. Install seals into master cylinder.

- Remove plugs.
- Lubricate seals with clean brake fluid.
- Install seals.

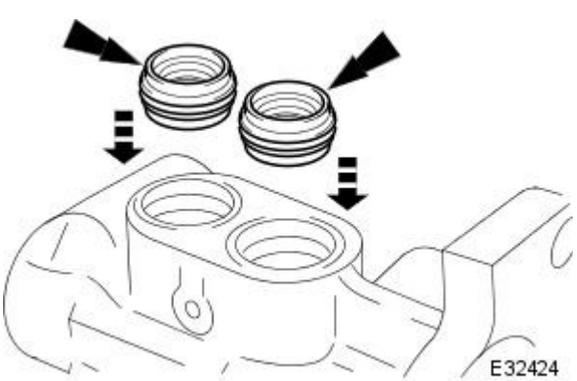

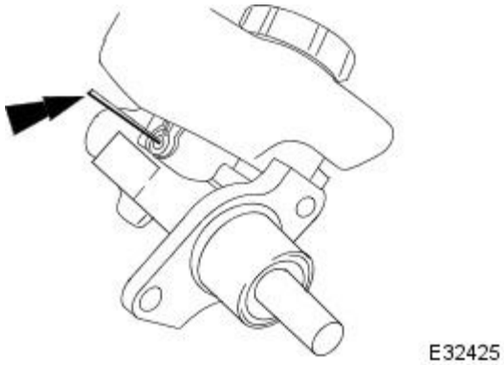

2. Install fluid reservoir to master cylinder.

- Remove plugs from reservoir
- Install reservoir, making sure reservoir is fully seated.
- Install locating pin.

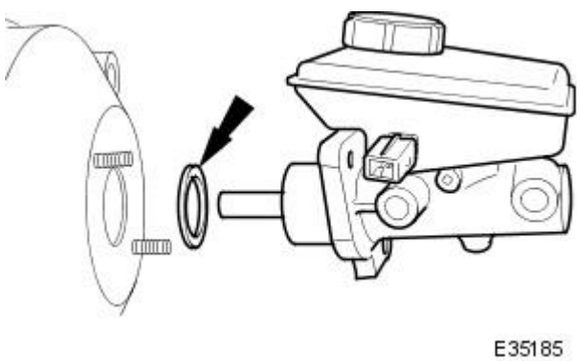

3. Install master cylinder to brake booster.

- Install seal.
- Install master cylinder, make sure master cylinder rod locates brake booster rod.

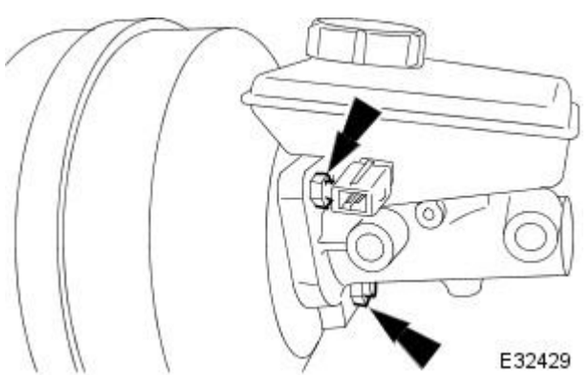

4. Install and tighten nuts to 21-29 Nm.

5. Install pedal housing, brake booster and master cylinder assembly. Refer to operation 70.35.39.

6. Install plenum cover. Refer to operation 76.10.01.

7. Install windshield wiper arm and blade assembly. Refer to operation 84.15.44.90.

8. Connect battery ground cable (IMPORTANT, see operation 86.15.15 for further information).

9. Bleed brake system. Refer to operation 70.25.03.

10. Remove paint-work protection covers and close engine compartment.

Hydraulic Brake Actuation - Brake Pedal

Removal and Installation

Removal

1. Remove the brake booster and brake master cylinder.
   For additional information, refer to Section 206-07 Power Brake Actuation.
2. Remove the brake pedal position (BPP) switch.

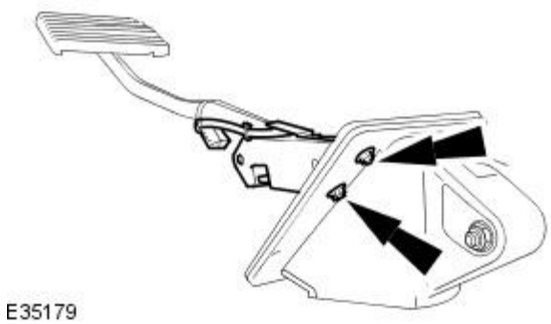

E35179

3. Remove brake pedal from pedal housing.
   - Remove nut.
   - Remove pivot pin.
   - Remove brake pedal.

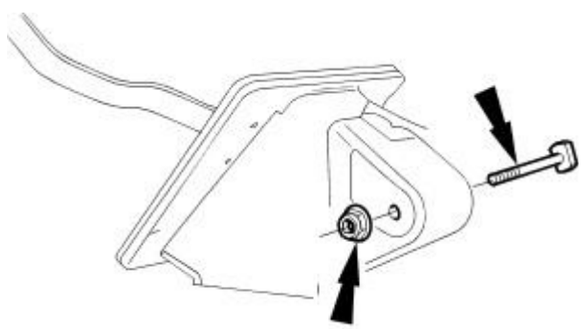

E35178

4. Clean components.

Installation

1. Install brake pedal to pedal housing.
   - Apply grease to pivot bush and pivot pin.
   - Align brake pedal in pedal housing.
   - Install pivot pin.
   - Install nut and tighten to 15-20 Nm.

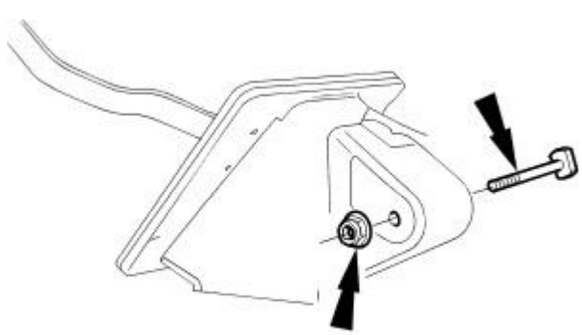

E35178

CAUTION: Make sure the BPP switch ratchet adjuster is fully released before installing.

2. Install the BPP switch.
   - Tighten to 3 Nm.

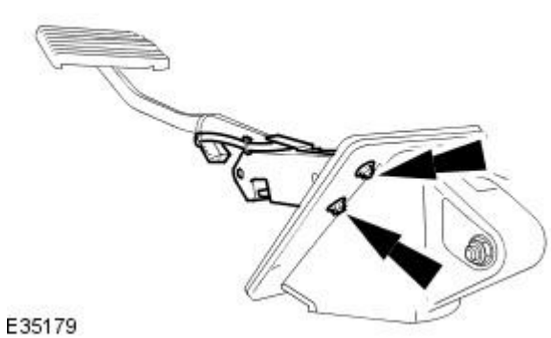

E35179

3. Install the brake booster and brake master cylinder assembly.
   For additional information, refer to Section 206-07 Power Brake Actuation.

Hydraulic Brake Actuation - Brake Pedal and Bracket

Removal and Installation

Removal

• CAUTIONS:

Replacement of nuts and bolts: Various thread-locking devices are used on nuts and bolts throughout the vehicle. These devices restrict the number of times a nut or bolt can be used. See section 100-00 for information.

Remove brake fluid spillage immediately from paint work, with clean water.

1. Position vehicle on a four-post lift.
2. Open engine compartment and fit paint work protection covers to fenders.
3. Disconnect battery ground cable (IMPORTANT, see operation 86.15.19 for further information).
4. Remove windshield wiper arm and blade assembly for access. Refer to operation 84.15.44.90.
5. Remove plenum cover for access. Refer to operation 76.10.01.
6. Remove pedal housing, brake booster and master cylinder assembly. Refer to operation 70.35.39.
7. Remove brake booster and master cylinder assembly. Refer to operation 70.50.18.
8. Remove stoplamp switch from pedal housing.
   - Remove nuts.

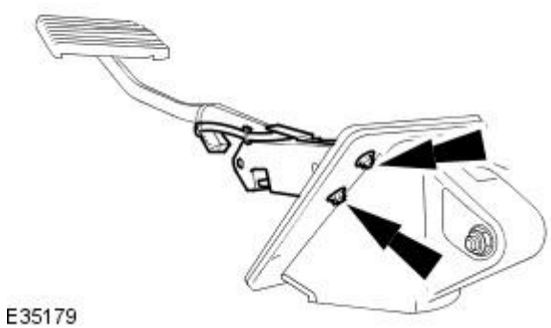

E35179

9. Remove brake pedal from pedal housing.
   - Remove nut.
   - Remove pivot pin.
   - Remove brake pedal.

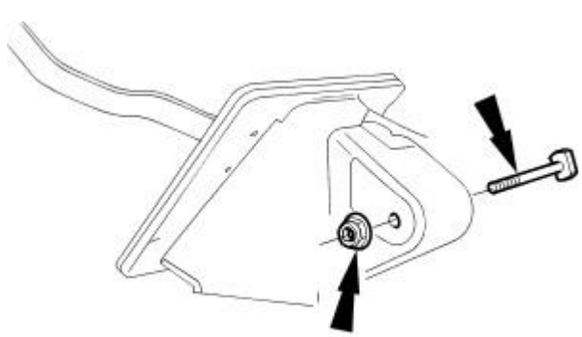

E35178

10. Clean components.

Installation

1. Install brake pedal to pedal housing.
   - Apply grease to pivot bush and pivot pin.
   - Align brake pedal in pedal housing.
   - Install pivot pin.
   - Install nut and tighten to 15-20 Nm.

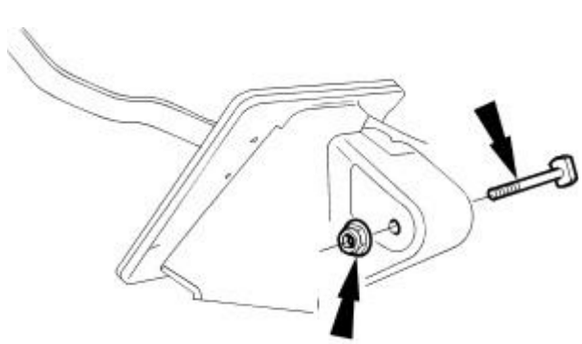

E35178

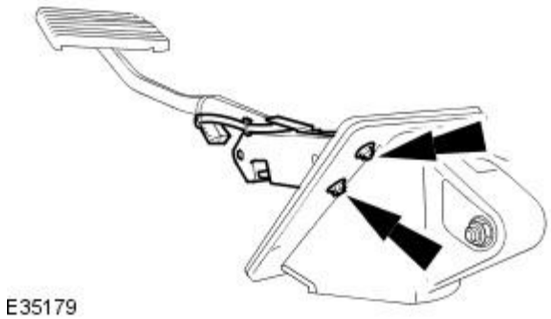

2. Install stoplamp switch to pedal housing.
   - Install nuts and tighten to 3 Nm.
3. Install brake booster and master cylinder assembly. Refer to operation 70.50.18.
4. Install pedal housing, brake booster and master cylinder assembly. Refer to operation 70.35.39.
5. Install plenum cover. Refer to operation 76.10.01.
6. Install windshield wiper arm and blade assembly. Refer to operation 84.15.44.90.
7. Reconnect battery ground cable (IMPORTANT, see operation 86.15.15 for further information).
8. Bleed brake system. Refer to operation 70.25.03.
9. Remove paint-work protection covers and close engine compartment.

Hydraulic Brake Actuation - Brake Pedal and Bracket, Brake Booster and Brake Master Cylinder

Removal and Installation

Removal

All vehicles

• CAUTIONS:

Replacement of nuts and bolts: Various thread-locking devices are used on nuts and bolts throughout the vehicle. These devices restrict the number of times a nut or bolt can be used. See section 100-00 for information.

Remove brake fluid spillage immediately from paint work, with clean water.

1. Position vehicle on a four-post lift.
2. Open engine compartment and fit paint work protection covers to fenders.
3. Disconnect the battery ground cable.
   For additional information, refer to: Battery Disconnect and Connect (414-01 Battery, Mounting and Cables, General Procedures).
4. Disconnect stop lamp switch connector.
   - Move carpet.
   - Disconnect electrical connector.

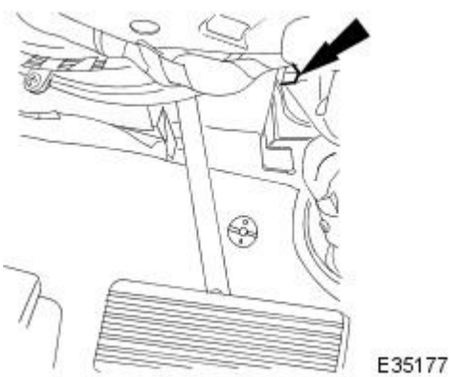

5. NOTE: Left-hand drive vehicles shown, right-hand drive vehicles similar.

   Remove the driver side bulkhead cover.

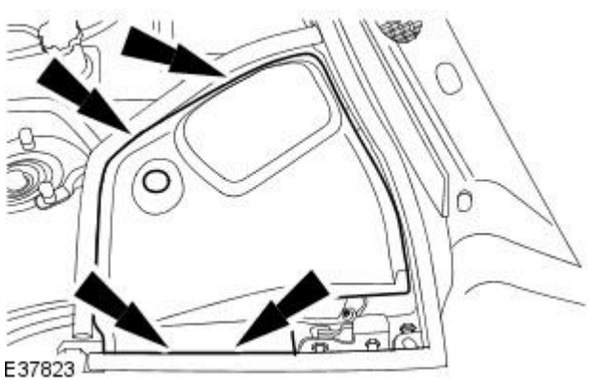

6. Remove the cowl panel grille.
   For additional information, refer to: Cowl Panel Grille (501-02 Front End Body Panels, Removal and Installation).

Left-hand drive vehicles

7. Remove the coolant expansion tank retaining bolt.

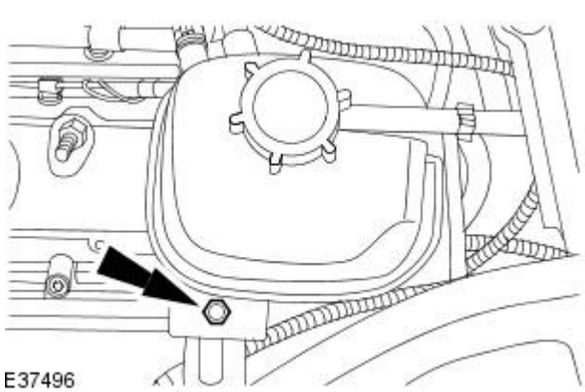

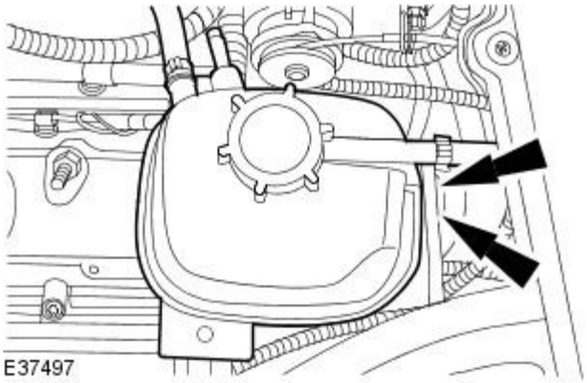

8. Detach the coolant expansion tank.

Right-hand drive vehicles

9. Remove the air cleaner outlet pipe.
For additional information, refer to: Air Cleaner Outlet Pipe (303-12 Intake Air Distribution and Filtering, Removal and Installation).

Vehicles with convertible top

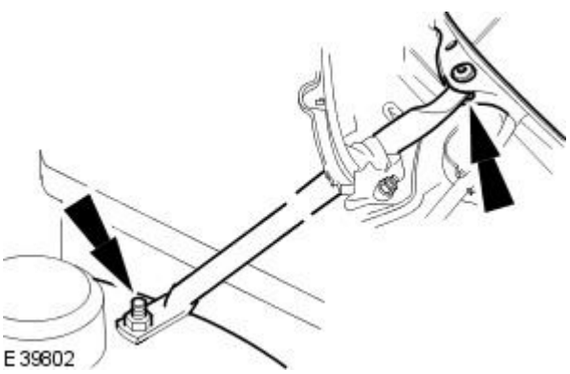

10. Detach and reposition the bulkhead support.

All vehicles

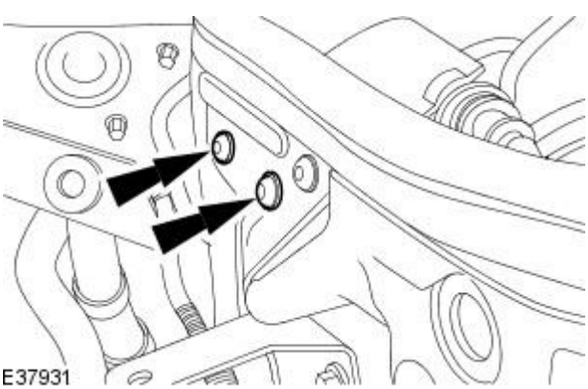

11. NOTE: Left-hand drive vehicles shown, right-hand drive vehicles similar.

Detach the accelerator pedal position (APP) sensor.

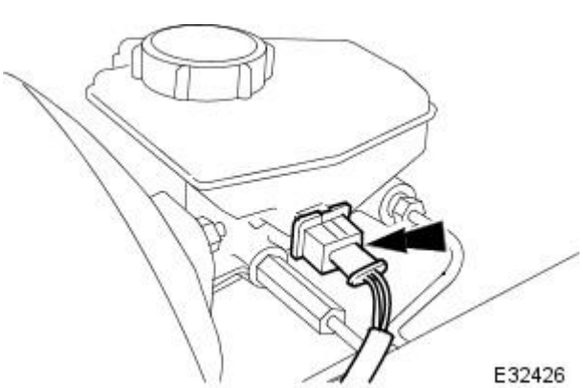

12. Disconnect low-level warning connector from master cylinder.

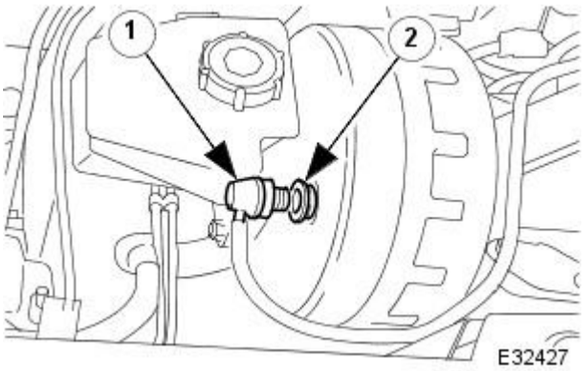

13. Disconnect vacuum pipe from brake booster.

1. Disconnect pipe.
2. Remove and discard seal.

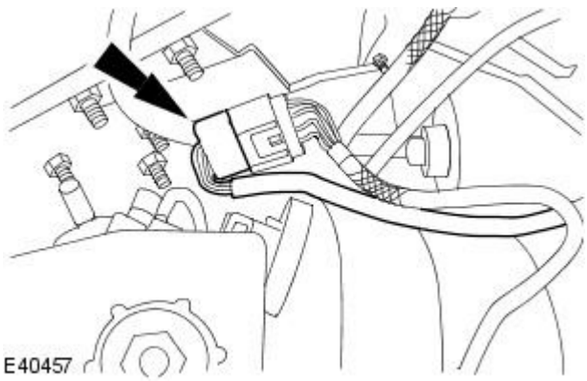

14. Disconnect the brake booster wiring harness electrical connector.

15. Position absorbent cloth underneath master cylinder to collect brake fluid spillage.

16. Disconnect brake tubes from master cylinder.

- Install plugs to brake tubes and master cylinder ports.

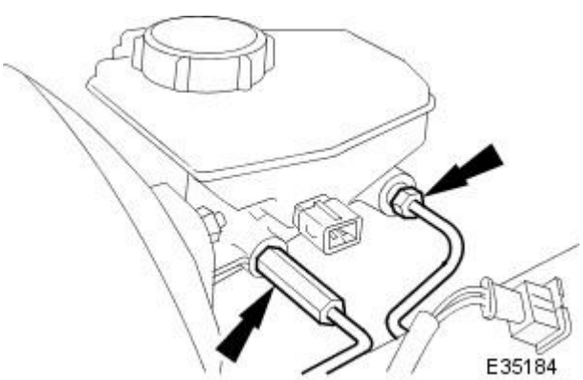

17. Remove pedal housing, brake booster and master cylinder assembly from vehicle.

- Remove nuts and bolts.
- Remove assembly from vehicle.

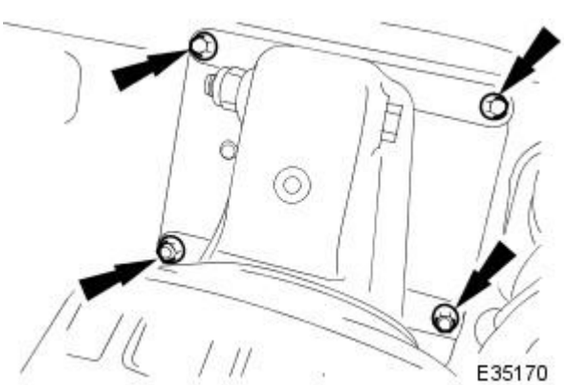

18. Remove and discard gasket from pedal housing.

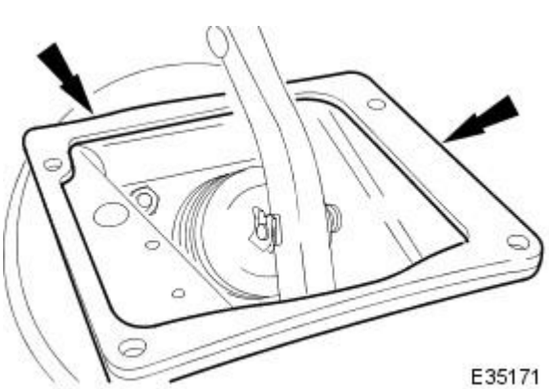

19. Clean components and mating surfaces.

Installation

All vehicles

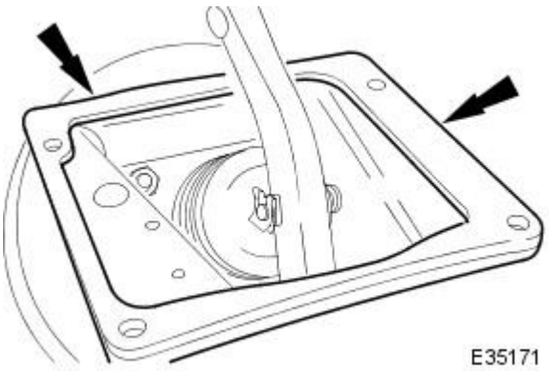

1. Install gasket to pedal housing assembly.

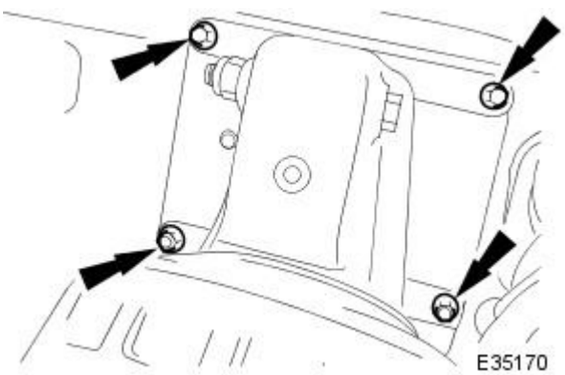

2. CAUTION: Make sure no pipes or cables become trapped when fitting the pedal housing assembly.

Install pedal housing to vehicle.

- Install nuts and bolts.
- Tighten bolts to 15-20 Nm.
- Tighten nuts to 15-20 Nm.

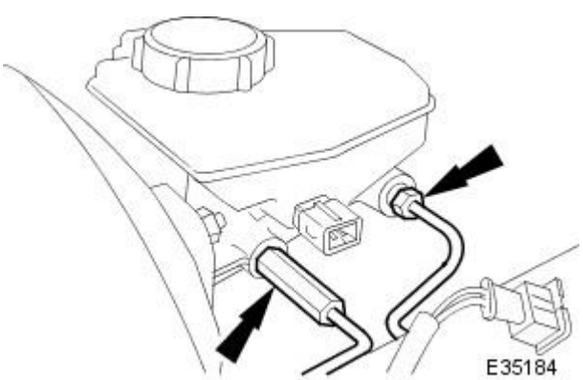

3. Install brake tubes to master cylinder.

- Remove plugs.
- Connect brake tubes and tighten unions to specification. Refer to Specification section 206-03.

4. Remove and dispose of the absorbent cloth whilst complying to local health and safety standards.

5. Connect the brake booster wiring harness electrical connector.

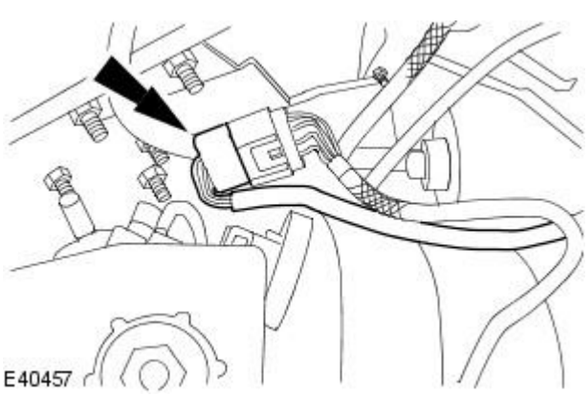

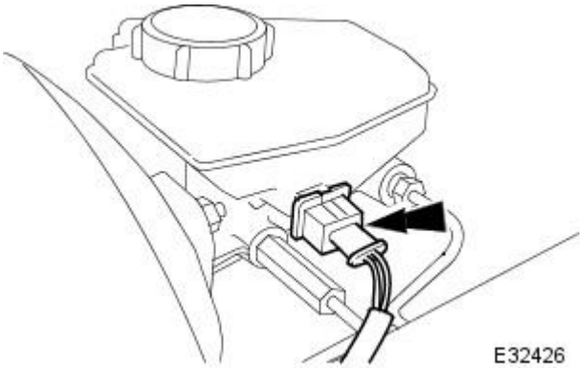

6. Connect low-level warning connector to master cylinder.

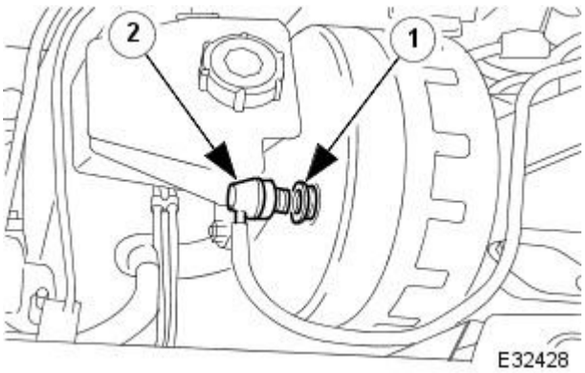

7. Connect vacuum pipe elbow to brake booster.

1. Install new seal.
2. Connect pipe.

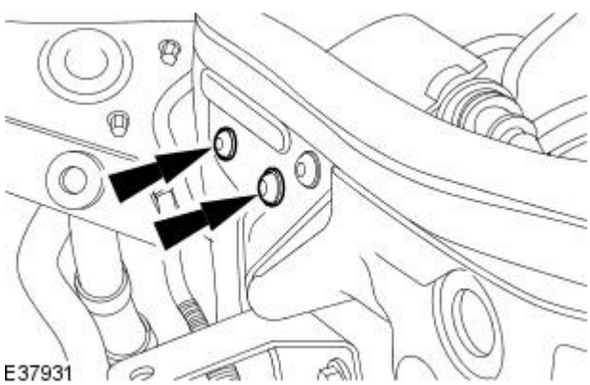

8. Attach the APP sensor.

- Tighten to 9 Nm.

Vehicles with convertible top

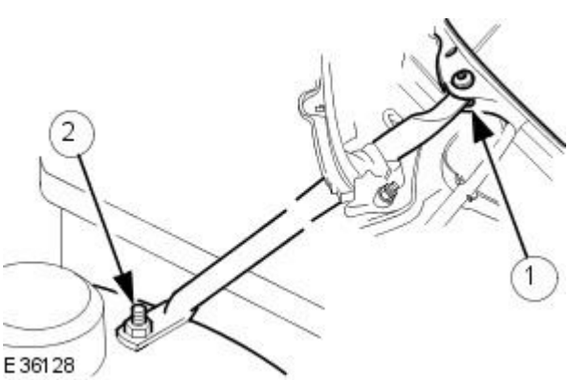

9. Attach the bulkhead support.

1. Tighten to 47 Nm.
2. Tighten to 30 Nm.

Right-hand drive vehicles

10. Install the air cleaner outlet pipe.
For additional information, refer to: Air Cleaner Outlet Pipe (303-12 Intake Air Distribution and Filtering, Removal and Installation).

Left-hand drive vehicles

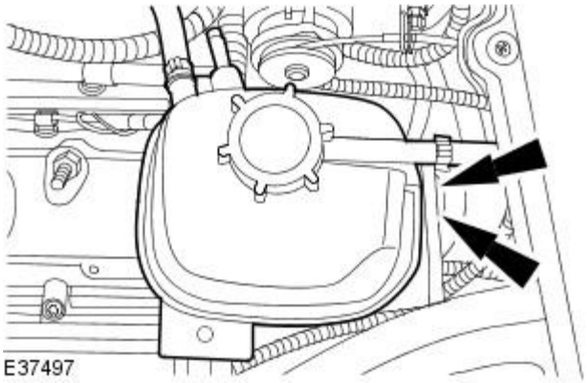

11. Attach the coolant expansion tank.

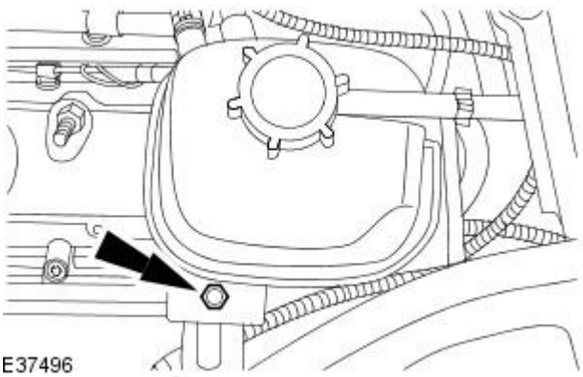

12. Install the coolant expansion tank retaining bolt.

- Tighten to 10 Nm.

All vehicles

13. Install the cowl panel grille.
For additional information, refer to: Cowl Panel Grille (501-02 Front End Body Panels, Removal and Installation).

14. NOTE: Left-hand drive vehicles shown, right-hand drive vehicles similar.

Install the driver side bulkhead cover.

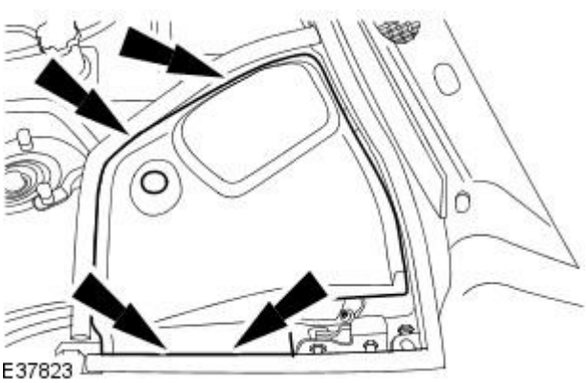

15. Connect stop lamp switch connector.

- Move carpet.
- Connect electrical connector.

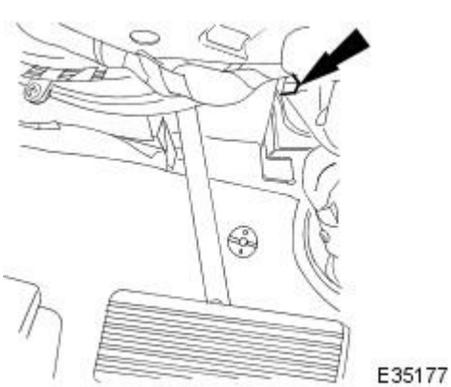

16. Connect the battery ground cable.
For additional information, refer to: Battery Connect (414-01 Battery, Mounting and Cables, General Procedures).

17. Bleed the brake system. For additional information, refer to: (206-00 Brake System - General Information)

Brake System Bleeding - Vehicles With: Standard Brakes (General Procedures),
Brake System Bleeding - Vehicles With: High Performance Brakes (General Procedures).

18. Remove paint-work protection covers and close engine compartment.

Power Brake Actuation -

Lubricants, Fluids, Sealants and Adhesives

Unit	Specification
Brake fluid	ITT Super Dot 4

Torques

CAUTION: Replacement of nuts and bolts: Various thread-locking devices are used on nuts and bolts throughout the vehicle. These devices restrict the number of times a nut or bolt can be used. See section 100-00 for information.

Component	Nm
Nut - master cylinder to brake booster	21-29
Nut - brake pedal pivot-pin to pedal housing	15-20
Nut - brake switch to pedal housing	3
Bolt - pedal housing to body	15-20
Nut - pedal housing to body	15-20
Nut - brake booster to pedal housing	21-29

Brake Tube, Hoses and Bracket Torques

CAUTION: Replacement of nuts and bolts: Various thread-locking devices are used on nuts and bolts throughout the vehicle. These devices restrict the number of times a nut or bolt can be used. See section 100-00 for information.

Component	Nm
Bleed nipple - front	4-6
Bleed nipple - rear	8-11
Hose to front caliper	10-14
Hose banjo to rear caliper - bolt	30-40
M10 hose locknut	15-20
M10 brake tube female-nut	13-17
M10 brake tube male-nut	13-17
M12 brake tube male-nut	15-20
Bolt - 3-way tube connector to body	9-12

Published: 11-May-2011

Power Brake Actuation - Brake Booster

Description and Operation

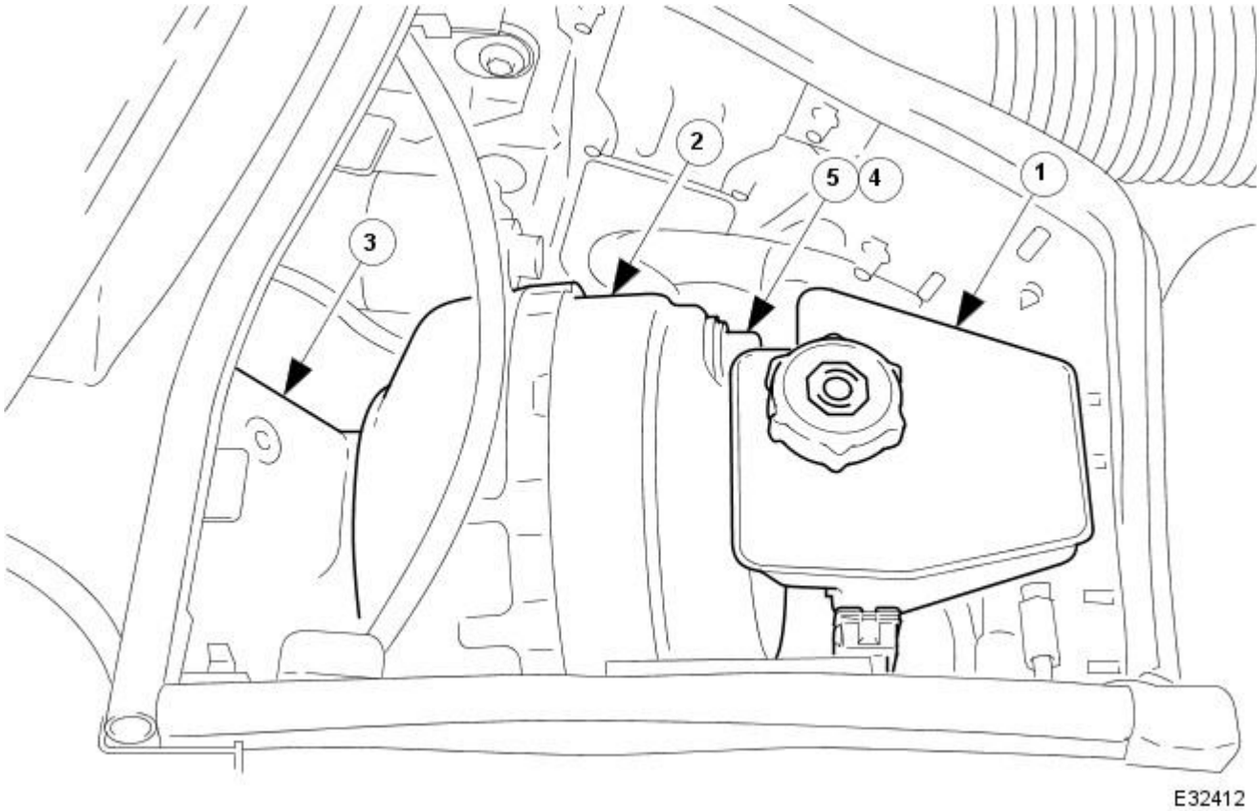

Item	Part Number	Description
1	—	Master Cylinder / Reservoir - refer to 206-06
2	—	Booster
3	—	Pedal Box - refer to 206-06
4	—	Vacuum Hose
5	—	Non-Return Valve

- The brake booster provides assistance by reinforcing the driver's effort when braking. The reinforced assistance provided by the booster is proportional to the driver's effort applied to the brake pedal.
- The brake force applied by the driver is increased by the booster in a ratio of 6.5:1.
- The vacuum used to operate the booster is formed in the engine's intake manifold. The booster is connected to the intake manifold by a hose.
- The booster is fail-safe therefore, if a fault develops in the vacuum unit, the braking system will still function. However, the driver will have to apply a greater force to the brake pedal to slow down the vehicle.

Power Brake Actuation - Brake Booster

Removal and Installation

Removal

• CAUTIONS:

Replacement of nuts and bolts: Various thread-locking devices are used on nuts and bolts throughout the vehicle. These devices restrict the number of times a nut or bolt can be used. See section 100-00 for information.

Remove brake fluid spillage immediately from paint work, with clean water.

1. Position vehicle on a four-post lift.
2. Open engine compartment and fit paint work protection covers to fenders.
3. Disconnect battery ground cable (IMPORTANT, see operation 86.15.19 for further information).
4. Remove windshield wiper arm and blade assembly for access. Refer to operation 84.15.44.90.
5. Remove plenum cover for access. Refer to operation 76.10.01.
6. Remove pedal housing, brake booster and master cylinder assembly. Refer to operation 70.35.39.
7. Remove brake booster and master cylinder assembly. Refer to operation 70.50.18.
8. Remove nuts securing master cylinder to brake booster.

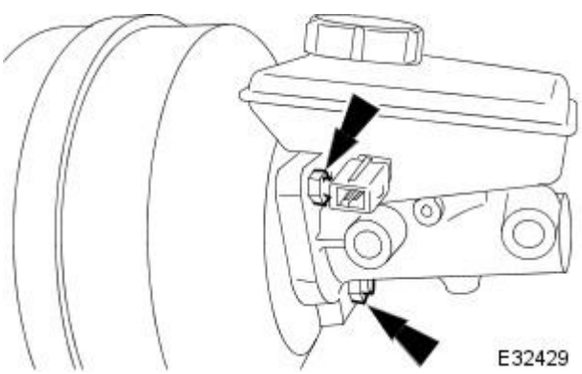

9. Remove master cylinder from brake booster.
   - Remove master cylinder.
   - Remove and discard seal.
   - Remove filler cap and empty residual brake fluid into a container.

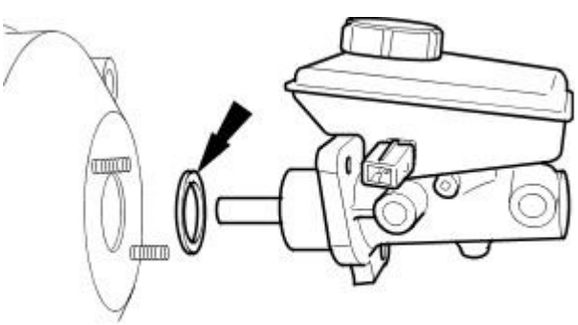

10. Clean components and mating surfaces.

Installation

1. Install master cylinder to brake booster.
   - Install seal.
   - Install master cylinder, make sure master cylinder rod locates brake booster rod.

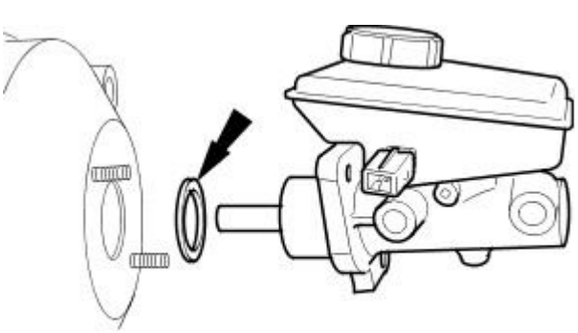

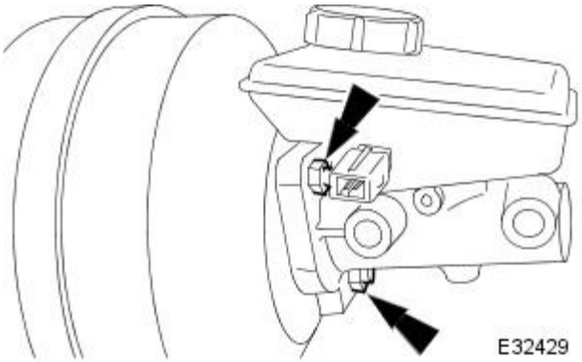

2. Install and tighten nuts to 21-29 Nm.

3. Install brake booster and master cylinder assembly. Refer to operation 70.50.18.
4. Install pedal housing, brake booster and master cylinder assembly. Refer to operation 70.35.39.
5. Install plenum cover. Refer to operation 76.10.01.
6. Install windshield wiper arm and blade assembly. Refer operation 84.15.44.90.
7. Reconnect battery ground cable (IMPORTANT, see operation 86.15.15 for further information).
8. Bleed brake system. Refer to operation 70.25.03.
9. Remove paint-work protection covers and close engine compartment.

Power Brake Actuation - Brake Booster and Brake Master Cylinder

Removal and Installation

Removal

• CAUTIONS:

Replacement of nuts and bolts: Various thread-locking devices are used on nuts and bolts throughout the vehicle. These devices restrict the number of times a nut or bolt can be used. See section 100-00 for information.

Remove brake fluid spillage immediately from paint work, with clean water.

1. Position vehicle on a four-post lift.
2. Open engine compartment and fit paint work protection covers to fenders.
3. Disconnect battery ground cable (IMPORTANT, see operation 86.15.19 for further information).
4. Remove windshield wiper arm and blade assembly for access. Refer to operation 84.15.44.90.
5. Remove plenum cover for access. Refer to operation 76.10.01.
6. Remove pedal housing, brake booster and master cylinder assembly. Refer to operation 70.35.39.
7. Remove reservoir filler cap and pour residual brake fluid into a container. Refit cap.
8. Remove stoplamp switch from pedal housing.
   - Remove nuts.

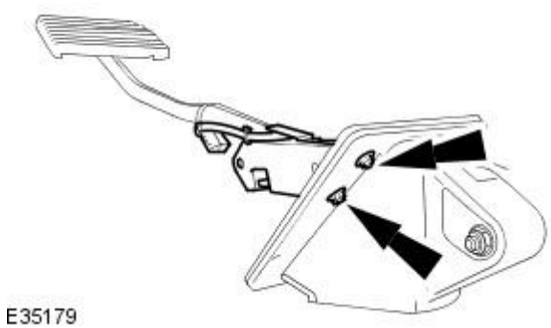
E35179

9. Release brake pedal from brake booster push-rod.
   - Remove clip from clevis pin.
   - Remove clevis pin.

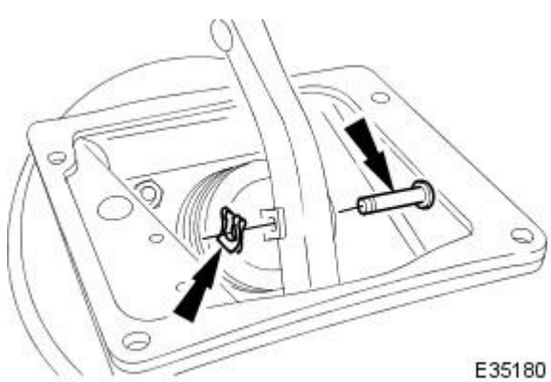
E35180

10. Separate brake booster and master cylinder assembly from pedal housing.
    - Remove nuts.

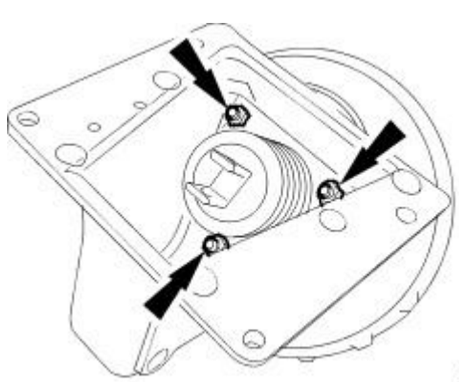
E35172

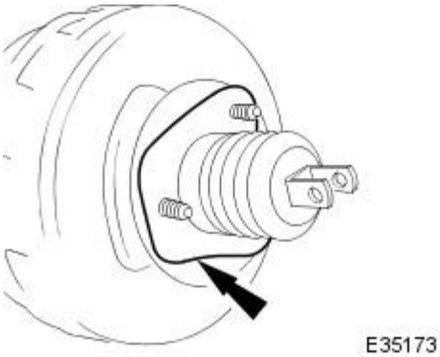

11. Remove and discard gasket.

12. Clean components and mating surfaces.

Installation

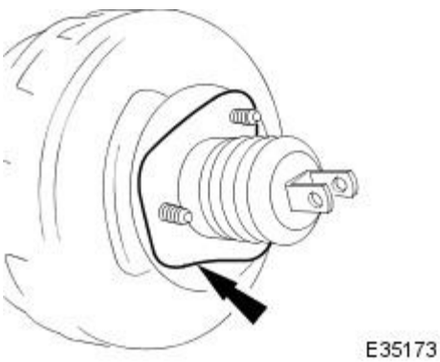

1. Install brake booster and master cylinder assembly to pedal housing.

- Apply grease to forked end of brake booster push-rod.
- Install gasket to brake booster.

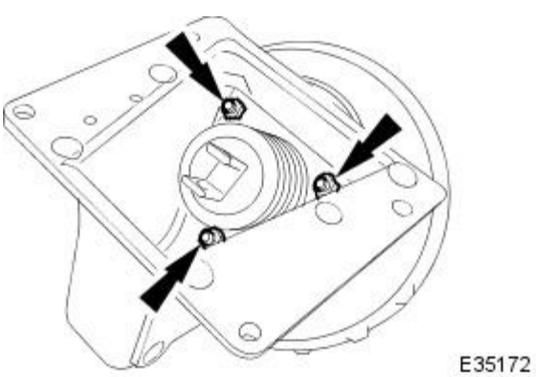

2. Align brake booster assembly to pedal housing, make sure push-rod fork straddles brake pedal.

- Install nuts and tighten to 22-28 Nm.

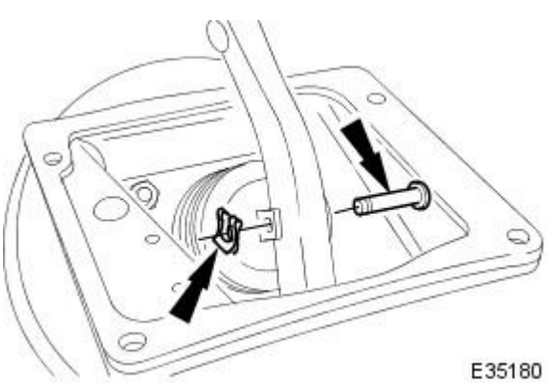

3. Connect brake pedal to brake booster push-rod.

- Apply grease and install clevis pin.
- Install clevis-pin clip

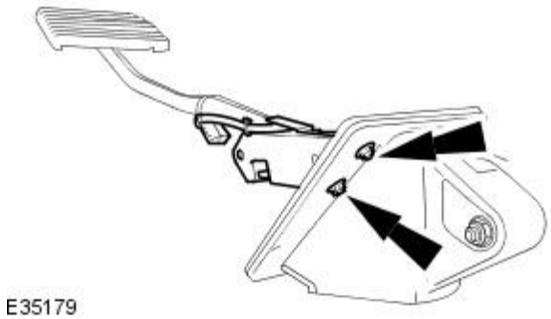

4. Install stoplamp switch to pedal housing.

- Install nuts and tighten to 3 Nm.

5. Install pedal housing, brake booster and master cylinder assembly. Refer to operation 70.35.39.

6. Install plenum cover. Refer to operation 76.10.01.

7. Install windshield wiper arm and blade assembly. Refer to operation 84.15.44.90.

8. Reconnect battery ground cable (IMPORTANT, see operation 86.15.15 for further information).

9. Bleed brake system. Refer to operation 70.25.03.

10. Remove paint-work protection covers and close engine compartment.

Anti-Lock Control - Stability Assist -

Lubricants, Fluids, Sealers and Adhesives

CAUTION: Do not use brake fluid ITT Super Dot 4 on 2006my vehicles onwards. Failure to follow this instruction may result in damage to the vehicle.

• NOTE: Brake fluid ITT Super Dot 4 has now been superseded by Shell ESL Super Dot 4 which is the Jaguar recommended brake fluid. Shell ESL Super Dot 4 can be used on all model years.

Item	Specification
Brake fluid	ITT Super Dot 4
Brake fluid	Shell ESL Super Dot 4

Torque Specifications

Description	Nm	Lb-ft	Lb-in
Anti-lock brakes system (ABS) module retaining screws	3	-	27
Brake tube retaining nuts - 11mm	16	12	-
Brake tube retaining nuts - 13mm	17	13	-
Brake master cylinder pressure transducer	30	22	-
Front wheel speed sensor retaining bolt	9	-	80
Front wheel speed sensor ring	300	221	-
Hydraulic control unit (HCU) retaining bolts	9	-	80
Rear wheel speed sensor retaining bolt	9	-	80
Steering wheel rotation sensor retaining bolts	1	-	9
Yaw rate sensor and accelerometer retaining screws	7	-	62

Anti-Lock Control - Stability Assist - Anti-Lock Control - Stability Assist

Description and Operation

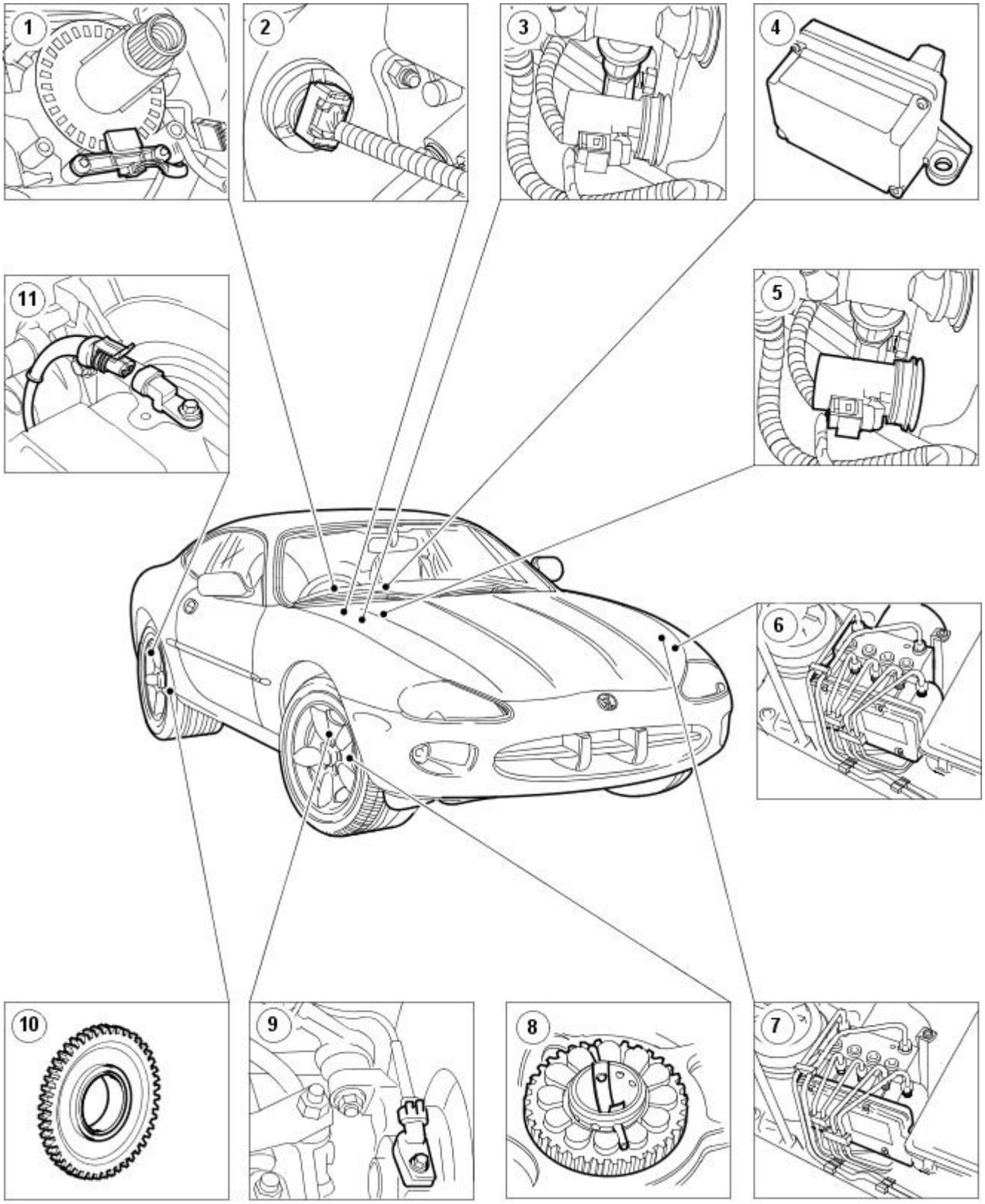

E 40412

Item	Part Number	Description
1	-	Steering wheel rotation sensor
2	-	Master cylinder active booster solenoid
3	-	Brake master cylinder pressure transducer
4	-	Yaw rate sensor and accelerometer
5	-	Brake pedal travel switch
6	-	Hydraulic control unit (HCU)
7	-	Anti-lock brake system (ABS) module
8	-	Front wheel speed sensor ring
9	-	Front wheel speed sensor
10	-	Rear wheel speed sensor ring
11	-	Rear wheel speed sensor

The anti-lock control - stability assist system includes the:

- anti-lock brake system (ABS)
- yaw/acceleration control

- emergency brake assist
- traction control

Anti-lock Brake System (ABS)

The anti-lock brake system (ABS) modulates brake pressure on each wheel independently to maintain vehicle stability during braking. The ABS continually monitors the rotational velocity of each wheel anytime the ignition switch is in the run position and determines if a tire is skidding when the brakes are applied. Only then does the ABS intervene to modulate the brake pressure to the skidding wheel. The modulation continues until the wheel rotates freely. The brake pressure is then restored and the modulate/restore cycle is repeated whenever skidding is detected. This cycle occurs at a rate of several times per second.

There are four wheel speed sensors which transmit the speed of each wheel to the ABS module. The speed of the wheel is calculated by the sensor generating an alternating current (AC) as the wheel speed sensor ring passes by the wheel speed sensor. The ABS module then calculates the speed of the wheel by the frequency of the AC.

The ABS module is capable of detecting the following system conditions:

- hydraulic valve failure
- wheel speed sensor failure
- ABS power relay short circuit
- interconnect failures to the ABS sensors, power and ground to the ABS module
- over/under voltage conditions

The ABS provides self-diagnostics and displays failure messages via the ABS indicator in the instrument cluster. Failure of the ABS module, for whatever reason, will not compromise the normal operation of the brake system.

Traction Control

Traction control is an additional function added to the anti-lock control - stability assist system. The vehicles driven wheels are continually monitored for wheel spin relative to the calculated reference speed and to each other. If wheel spin is detected, the traction control function intervenes independently of the driver, applying brake pressure to the slipping wheel and reducing the engine drive torque supply. Meanwhile, brake pressure is modulated by the traction control until traction is re-established. Traction control brake actuation is diminished above 40 km/h (25 mph). Above this speed traction control relies primarily on engine torque reduction.

The traction control brake intervention is automatically disabled whenever the brakes exceed a temperature limit. The traction control brake intervention will remain disabled until the brakes have cooled, irrespective of ignition switch position or ignition switch cycling.

Stability Assist

The anti-lock control - stability assist system manages the braking system to enhance the driver control of the vehicle.

The anti-lock control - stability assist system continually monitors the steering wheel angle, master cylinder brake pressure, front and rear wheel speeds, vehicle yaw and acceleration.

The yaw rate sensor and accelerometer supplies a signal to the ABS system module, via a serial link, which monitors the vehicles rate of acceleration from its central axis in a sideways direction, and also the vehicles angular rotation around it's central axis.

The driver input parameters are continually monitored via the brake master cylinder pressure transducer, the brake pedal travel switch and the steering wheel rotation sensor.

Anti-lock control - stability assist is enabled/disabled via the traction control ON/OFF switch.

Self-diagnosis of the anti-lock control - stability assist system is provided via the instrument cluster message centre.

Emergency Brake Assist

The emergency brake assist function allows the driver to enter ABS with greater speed and efficiency so that maximum braking is achieved sooner. Using the information received from the wheel speed sensors, brake pedal travel switch, master cylinder pressure transducer, master cylinder active booster solenoid and the yaw rate sensor and accelerometer, the ABS module detects whether more braking pressure can be applied in relation to how much braking pressure the driver is applying in an emergency braking situation.

Published: 11-May-2011

Anti-Lock Control - Stability Assist - Anti-Lock Control - Stability Assist

Diagnosis and Testing

Principle of operation

The anti-lock control - stability assist system includes the:

- anti-lock brake system (ABS)
- yaw/acceleration control
- emergency brake assist
- traction control

Anti-lock Brake System (ABS)

The anti-lock brake system (ABS) modulates brake pressure on each wheel independently to maintain vehicle stability during braking. The ABS continually monitors the rotational velocity of each wheel anytime the ignition switch is in the run position and determines if a tire is skidding when the brakes are applied. Only then does the ABS intervene to modulate the brake pressure to the skidding wheel. The modulation continues until the wheel rotates freely. The brake pressure is then restored and the modulate/restore cycle is repeated whenever skidding is detected. This cycle occurs at a rate of several times per second.

The ABS module is capable of detecting the following system conditions:

- hydraulic valve failure
- wheel speed sensor failure
- ABS power relay short circuit
- interconnect failures to the ABS sensors, power and ground to the ABS module
- over/under voltage conditions

The ABS provides self-diagnostics and displays failure messages via the ABS indicator in the instrument cluster. Failure of the ABS module, for whatever reason, will not compromise the normal operation of the brake system.

Traction Control

Traction control is an additional function added to the anti-lock control - stability assist system. The vehicles driven wheels are continually monitored for wheel spin relative to the calculated reference speed and to each other. If wheel spin is detected, the traction control function intervenes, applying brake pressure to the slipping wheel and reducing the engine drive torque supply. Meanwhile, brake pressure is modulated by the traction control until traction is re-established. Traction control brake actuation is diminished above 40 Km/h (25 mph). Above this speed traction control relies primarily on engine torque reduction.

The traction control brake intervention is automatically disabled whenever the brakes exceed a temperature limit. The traction control brake intervention will remain disabled until the brakes have cooled, irrespective of ignition switch position or ignition switch cycling.

Stability Assist

Dynamic stability control (DSC) maximizes vehicle stability under all conditions. The DSC system compares actual vehicle course to that intended by the driver. If the intended course differs from the actual course due to over steer or under steer conditions, the DSC system will brake individual wheels and reduce engine torque to bring the vehicle back to the driver's intended direction. By using a combined yaw rate sensor and lateral accelerometer, the vehicles rotational motion around its vertical axis and centrifugal forces generated while cornering are calculated to determine the vehicle's actual behavior. Using additional sensors for detecting steering wheel position and road wheel speed enables the system to recognize the driver's intentions.

Dynamic stability control is enabled/disabled via the DSC **ON/OFF** switch. When the switch is in the **OFF** position, the amber DSC warning lamp solidly illuminates within the instrument cluster message center. The DSC is automatically activated when the ignition is switched on. The DSC also provides failure messages via the instrument cluster message center.

Emergency Brake Assist

The emergency brake assist function allows the driver to enter ABS with greater speed and efficiency so that maximum braking is achieved sooner. Using the information received from the wheel speed sensors, brake pedal travel switch, master cylinder pressure transducer, master cylinder active booster solenoid and the yaw rate sensor and accelerometer, the ABS module detects whether more braking pressure can be applied in relation to how much braking pressure the driver is applying in an emergency braking situation.

Inspection and Verification

1. **1.** Verify the customer concern.
2. **2.** Visually inspect for obvious signs of mechanical or electrical damage.
3. **3.** If an obvious cause for an observed or reported concern is found, correct the cause (if possible) before proceeding to the next step
4. **4.** If the cause is not visually evident, verify the symptom and refer to the Symptom Chart.

Inspection and Verification

1. **1.** Verify the customer concern.
2. **2.** Confirm if the ABS warning light was illuminated, or still is.

• NOTE: An intermittent fault may allow the warning light to go off. This does not necessarily mean the fault is not present. Some warnings will appear to clear when the ignition is cycled. This is often because the warning has flagged as a result of one of the vehicle's on-board diagnostic routines having run to detect the fault. If the same routine is not run when the ignition is switched **ON**, the warning will not reflag until the routine does run.

3. **3.** Visually inspect for obvious signs of mechanical or electrical damage.

Mechanical	Electrical
• Brake fluid level • Vacuum system • Wheel speed sensor fitment • Wheel speed sensor air gap • Wheel speed sensor tone ring(s) (missing or damaged teeth/contamination)	• Warning light operation • Fuses (see table) • Wheel speed sensors • Connectors/Pins • Harnesses

Mechanical	Electrical
• yaw rate/lateral accelerometer sensor cluster fitment • Incorrect wheel or tire size	• Steering wheel angle sensor • Yaw rate/lateral accelerometer sensor cluster • ABS/DSC module

4. **4.** If an obvious cause for an observed or reported concern is found, correct the cause (if possible) before proceeding to the next step.

5. **5.** If the cause is not visually evident and the Jaguar approved diagnostic system is not available, use a fault code reader to retrieve the fault codes before proceeding to the diagnostic trouble code (DTC) index chart.

Fuse Identification Table

Location	Fuse Number	Rating	Circuit
Engine bay fuse box	18	30 Amp	ABS/Stability assist control pump battery supply
Engine bay fuse box	16	30 Amp	ABS/Stability assist control module valve battery supply
Luggage compartment fuse box	2	20 Amp	ABS/Stability assist control module ignition supply
Luggage compartment fuse box	6	5 Amp	Stop lamps ignition supply
Luggage compartment fuse box	8	5 Amp	High level stop lamp ignition supply

Brake Pedal Position Switch Calibration

The brake pedal position switch procedure is under review. For further information, contact dealer technical support.

Diagnostic Trouble Code (DTC) Index

DTC	Description	Possible Source	Action
C1093	Traction control disable CAN failure	• Traction control disable CAN message failure	For CAN module circuit tests, REFER to Section 418-00 Module Communications Network.
C1095	Pump motor circuit failure	• Pump motor B+ power supply circuit; high resistance, open circuit, short circuit to GROUND, short circuit to B+ • Pump motor failure	For ABS/DSC module circuit tests,GO to Pinpoint Test A. .
C1141	Left-hand front wheel speed sensor tone ring damaged/missing tooth	• Damaged/ missing tooth on tone ring	Refer to visual inspection chart. Inspect tone ring for damage.
C1142	Right-hand front wheel speed sensor tone ring damaged/missing tooth	• Damaged/ missing tooth on tone ring	Refer to visual inspection chart. Inspect tone ring for damage.
C1143	Left-hand rear wheel speed sensor tone ring damaged/missing tooth	• Damaged/ missing tooth on tone ring	Refer to visual inspection chart. Inspect tone ring for damage.
C1144	Right-hand rear wheel speed sensor tone ring damaged/missing tooth	• Damaged/ missing tooth on tone ring	Refer to visual inspection chart. Inspect tone ring for damage.
C1145	Right-hand front wheel speed sensor (WSS) circuit failure	• Wheel speed sensor circuit; open circuit, short circuit • Wheel speed sensor to control module circuit; high resistance, open circuit, short circuit to GROUND • Wheel speed sensor failure	For right hand front WSS circuit tests,GO to Pinpoint Test B. .
C1155	Left-hand front wheel speed sensor (WSS) circuit failure	• Wheel speed sensor circuit; open circuit, short circuit • Wheel speed sensor to control module circuit; high resistance, open circuit, short circuit to GROUND • Wheel speed sensor failure	For left hand front WSS circuit tests,GO to Pinpoint Test C. .
C1165	Right-hand rear wheel speed sensor (WSS) circuit failure	• Wheel speed sensor circuit; open circuit, short circuit • Wheel speed sensor to control module circuit; high resistance, open circuit, short circuit to GROUND • Wheel speed sensor failure	For right hand rear WSS circuit tests,GO to Pinpoint Test D. .
C1175	Left-hand rear wheel speed sensor (WSS) circuit failure	• Wheel speed sensor circuit; open circuit, short circuit • Wheel speed sensor to control module circuit; high resistance, open circuit, short circuit to GROUND • Wheel speed sensor failure	For left -hand rear WSS circuit tests,GO to Pinpoint Test E. .
C1233	Left-hand front wheel speed sensor (WSS) signal failure	• Wheel speed sensor gap too large • Missing tone ring or sensor • Incorrect tone ring • Incorrect wheel size	Check the wheel speed sensor for correct fitment. REFER to Front Wheel Speed Sensor - in this section.
C1234	Right-hand front wheel speed sensor (WSS) signal failure	• Wheel speed sensor gap too large • Missing tone ring or sensor • Incorrect tone ring • Incorrect wheel size	Check the wheel speed sensor for correct fitment. REFER to Front Wheel Speed Sensor - in this section.
C1235	Right-hand rear wheel speed sensor (WSS) signal failure	• Wheel speed sensor gap too large • Missing tone ring or sensor • Incorrect tone ring • Incorrect wheel size	Check the wheel speed sensor for correct fitment. REFER to Rear Wheel Speed Sensor - in this section.

DTC	Description	Possible Source	Action
C1236	Left-hand rear wheel speed sensor (WSS) signal failure	• Wheel speed sensor gap too large • Missing tone ring or sensor • Incorrect tone ring • Incorrect wheel size	Check the wheel speed sensor for correct fitment. REFER to Rear Wheel Speed Sensor - in this section.
C1267	ABS/DSC function temporarily disabled	• HF interference • Supply voltages to valve solenoids or sensors out of range • EEPROM read/write failure • ABS/DSC module failure	Contact dealer technical support for advice on possible ABS/DSC module failure. Refer to inspection and verification for information on warning light behavior
C1277	Steering angle sensor (SA sensor) circuit A/B failure	• SA sensor circuit(s) open circuit, short circuit, short circuit to GROUND or B+ • SA sensor damaged • Sensor wiring damaged • Sensor loose, not mounted correctly	For SA sensor circuit tests,GO to Pinpoint Test F. .
C1279	Yaw rate sensor circuit failure	• Yaw rate/lateral accelerometer sensor cluster circuit(s) open/short circuit, short circuit to GROUND or B+ • Yaw rate/lateral accelerometer sensor cluster failure	For lateral/yaw rate sensor circuit tests,GO to Pinpoint Test G. .
C1280	Yaw rate sensor signal failure	• Sensor loose, not mounted correctly • Yaw rate/lateral accelerometer sensor cluster failure	Refer to visual inspection chart. Check sensor fitment. Refer to dealer technical support for advice on possible sensor failure.
C1281	Lateral accelerometer sensor circuit failure	• Connector pins bent or corroded • Sensor wiring damaged • Yaw rate/lateral accelerometer sensor cluster failure	For lateral/yaw rate sensor circuit tests,GO to Pinpoint Test G. .
C1282	Lateral accelerometer sensor signal failure	• Sensor loose, not mounted correctly • Yaw rate/lateral accelerometer sensor cluster failure	Refer to visual inspection chart. Check sensor fitment. Refer to dealer technical support for advice on possible sensor failure.
C1285	Booster solenoid circuit failure	• Booster solenoid circuit open circuit, short circuit to GROUND • Booster solenoid failure	For booster solenoid circuit tests,GO to Pinpoint Test H. .
C1286	Booster mechanical failure	• Brake light switch incorrectly calibrated • Pedal force switch open circuit, short circuit to GROUND • Pedal force switch failure • Active brake booster mechanical failure • ABS/DSC module failure	Contact dealer technical support for advice on brake pedal position switch calibration procedure. For pedal force switch tests,GO to Pinpoint Test I. . Contact dealer technical support for advice on possible active brake booster or ABS/DSC module failure.
C1287	Booster pedal force switch circuit failure	• Booster pedal force switch open circuit, short circuit to GROUND or B+ • Booster pedal force switch failure	For pedal force switch tests,GO to Pinpoint Test I. .
C1288	Pressure sensor main/primary input circuit failure	• Brake pressure circuit open circuit, short circuit to GROUND or B+ • Connector pins bent or corroded • Damaged harness/wiring • Sensor failure • ABS/DSC module failure	For pressure sensor circuit tests,GO to Pinpoint Test J. .
C1295	Steering angle sensor internal failure	• Steering angle signal open circuit, short circuit to GROUND or B+, high resistance • Sensor loose • Encoder ring contaminated • Sensor failure	For SA sensor circuit tests,GO to Pinpoint Test F. . Check sensor fitment, check encoder ring for debris.
C1306	Steering angle sensor–no center found during initialization	• Steering angle sensor — no center found within time limits	Check for associated DTCs. Reinitialize the sensor by turning the ignition to the **OFF** position, then back **ON** without turning the steering wheel.
C1307	Steering wheel angle sensor encoder ring failure	• Loose or damaged encoder ring • Steering angle sensor failure • Signal wires shorted together	Check the security and condition of the steering angle sensor encoder ring. Check encoder ring for debris. For SA sensor circuit tests,GO to Pinpoint Test F. .
C1440	Brake pressure sensor signal fault	• Pressure sensor signal circuit open circuit, short circuit to GROUND or B+ • Brake pressure sensor failure	For pressure sensor circuit tests,GO to Pinpoint Test J. .
C1446	Brake switch circuit failure	• Brake light switch signal failure • Mechanical switch failure	For brake light switch circuit tests,GO to Pinpoint Test L. .
C1730	Sensor supply voltage out of range (+5 volt)	• Sensor supply voltage circuit short circuit to GROUND or B+ • Defective sensor • ABS/DSC module failure	For sensor power and GROUND circuit tests, REFER to Section 418-00 Module Communications Network. Contact dealer technical support for advice on possible ABS/DSC module failure.
C1777	Vacuum pressure circuit failure	• Mechanical failure in active booster unit • ABS/DSC module failure	CLEAR the DTC. TEST the system for normal operation. If the DTC is repeated, contact dealer technical support for advice on possible active booster or ABS/DSC module failure.
C1994	DSC continuous operation fault	• Yaw rate sensor cluster failure	Contact dealer technical support for advice on possible yaw rate sensor cluster failure.

DTC	Description	Possible Source	Action
C1997	Pressure controller failure	• Booster solenoid open/short circuit, short circuit to GROUND or B+, high resistance • Booster solenoid failure • Pressure sensor signal open/short circuit, short circuit to GROUND or B+, high resistance • Pressure sensor failure	For booster solenoid circuit tests,GO to Pinpoint Test H. . For pressure sensor circuit tests, GO to Pinpoint Test J. .
C2778	Yaw rate/Lateral accelerometer sensor cluster power supply failure	• Sensor power supply voltage open circuit, short circuit to GROUND or B+ • ABS/DSC module failure	For lateral/yaw rate sensor circuit tests,GO to Pinpoint Test G. . Contact dealer technical support for advice on possible ABS/DSC module failure.
C2783	Sensor cluster incorrect	• Incorrect yaw rate/lateral accelerometer sensor cluster fitted	Contact dealer technical support for advice on possible yaw rate sensor cluster failure.
C2785	Yaw rate/Lateral accelerometer sensor(s) out of calibration	• Yaw rate/Lateral accelerometer sensor cluster not calibrated	Contact dealer technical support for advice on recalibration of the yaw rate sensor cluster.
B1231	Longitudinal acceleration threshold exceeded	• Check brake hydraulic/mechanical function/condition • Pressure sensor failure • ACC failure • Hydraulic unit failure • Mechanical failure in booster actuation unit • Brake booster vacuum low • Brake booster failure	Carry out a full vehicle DTC check. Check for DTC P1696 as an indication of an ACC system fault. For pressure sensor circuit tests,GO to Pinpoint Test J. . For vacuum circuit tests refer to inspection and verification. Contact dealer technical support for further advice.
B1317	Supply voltage out of range (HIGH)	• Charging system failure • ABS/DSC module GROUND fault	Check the battery condition and charging system, REFER to Section 414-00 Battery and Charging System - General Information / 414-01 Battery, Mounting and Cables.
B1318	Supply voltage out of range (LOW)	• Battery failure, loose connections • Charging system failure • ABS/DSC module positive supply fault	Check the battery condition and charging system, REFER to Section 414-00 Battery and Charging System - General Information / 414-01 Battery, Mounting and Cables.
B1342	ABC/DSC module failure	• ABS/DSC module failure	Contact dealer technical support for advice on possible ABS/DSC module failure
B2141	NVM configuration failure	• No or invalid vehicle configuration information received from the ECM and stored in EEPROM	Reconfigure the ECM REFER to Section 418-00 Module Communications Network.
B2736	Pedal travel sensor circuit failure	• Pedal travel sensor circuit: open circuit, short circuit to GROUND or B+, high resistance, signal wires short circuit to each other	For pedal travel sensor tests,GO to Pinpoint Test K. .
B2739	Pedal travel sensor signal circuit failure	• Connector pins bent or corroded • Pedal travel sensor signal failure; open circuit, short circuit to GROUND or B+, high resistance • Pedal travel sensor failure • ABS/DSC module failure	For pedal travel sensor tests,GO to Pinpoint Test K. .
B2741	Yaw rate/Lateral accelerometer sensor cluster fault	• Yaw rate/Lateral accelerometer sensor cluster failure	Contact dealer technical support for advice on possible yaw rate sensor failure.
U1901	Local CAN yaw rate/lateral accelerometer sensor cluster communication fault	• Local CAN fault • Control module internal local CAN failure • Yaw rate/Lateral accelerometer sensor cluster failure	For CAN module circuit tests, REFER to Section 418-00 Module Communications Network. Contact dealer technical support for advice on possible yaw rate sensor failure.
U2012	Communication bus error	• CAN failure • Control module internal CAN failure	For CAN circuit tests, REFER to Section 418-00 Module Communications Network.
U2202	Invalid configuration data received	• ABS/DSC incorrectly configured to VID block	Contact dealer technical support for advice on reconfiguration of modules.
U2515	Missing message for adaptive cruise control ACC	• CAN message is not received at specified rate or is missing	For CAN module circuit tests, REFER to Section 418-00 Module Communications Network.
U2522	CAN message timeout from TCM	• CAN message is not received at specified rate or is missing	For CAN module circuit tests, REFER to Section 418-00 Module Communications Network.
U2523	CAN message timeout from ECM	• CAN message is not received at specified rate or is missing	For CAN module circuit tests, REFER to Section 418-00 Module Communications Network.
U2527	Local CAN transmit error	• Local CAN failure	For CAN module circuit tests, REFER to Section 418-00 Module Communications Network.

Pinpoint Tests

CAUTION: When probing connectors to take measurements in the course of the pinpoint tests, use the adaptor kit, part number 3548-1358-00.

• NOTE: When performing electrical voltage or resistance tests, always use a digital multimeter (DMM) accurate to 3 decimal places, and with an up-to-date calibration certificate. When testing resistance, always take the resistance of the DMM leads into account.

• NOTE: Check and rectify basic faults before beginning diagnostic routines involving pinpoint tests.

PINPOINT TEST A : C1095; PUMP MOTOR FAULT

• NOTE: Check connectors and pins for damage/corrosion (see visual inspection).

TEST CONDITIONS	DETAILS/RESULTS/ACTIONS
A1: CHECK THE BATTERY POWER SUPPLY (1) TO THE ABS/DSC MODULE	
	1 Turn the ignition switch to the **OFF** position.
	2 Disconnect the ABS/DSC module electrical connector LF37.
	3 Measure the voltage between LF37, pin 01 (NR) and GROUND.
	Is the voltage less than 10 volts? **Yes** REPAIR the circuit. This circuit includes the engine compartment fuse box (fuse 20). For additional information, refer to the wiring diagrams. CLEAR the DTC. TEST the system for normal operation. **No** GO to A2.
A2: CHECK THE BATTERY POWER SUPPLY (2) TO THE ABS/DSC MODULE	
	1 Measure the voltage between LF37, pin 32 (NW) and GROUND.
	Is the voltage less than 10 volts? **Yes** REPAIR the circuit. This circuit includes the engine compartment fuse box (fuse 22). For additional information, refer to the wiring diagrams. CLEAR the DTC. TEST the system for normal operation. **No** GO to A3.
A3: CHECK THE GROUND TO THE ABS/DSC MODULE	
	1 Measure the resistance between LF37, pins 16 and 47 (B) and GROUND.
	Is the resistance greater than 5 ohms? **Yes** REPAIR the high resistance circuit. For additional information, refer to the wiring diagrams. CLEAR the DTC. TEST the system for normal operation. **No** Contact dealer technical support for advice on possible ABS/DSC module failure.

PINPOINT TEST B : C1145; RIGHT HAND FRONT WHEEL SPEED SENSOR (WSS) ELECTRICAL FAILURE

• NOTE: Check connectors and pins for damage/corrosion (see visual inspection).

TEST CONDITIONS	DETAILS/RESULTS/ACTIONS
B1: CHECK THE WSS TO ABS/DSC MODULE SIGNAL CIRCUIT FOR HIGH RESISTANCE	
	1 Turn the ignition switch to the **OFF** position.
	2 Disconnect the ABS/DSC module electrical connector LF37.
	3 Disconnect the WSS electrical connector FR1.
	4 Measure the resistance between LF37, pin 34 (G) and FR1, pin 02 (G).
	Is the resistance greater than 5 ohms? **Yes** REPAIR the high resistance circuit. For additional information, refer to the wiring diagrams. CLEAR the DTC. TEST the system for normal operation. **No** GO to B2.
B2: CHECK THE WSS TO ABS/DSC MODULE SIGNAL CIRCUIT FOR SHORT TO GROUND	
	1 Measure the resistance between LF37, pin 34 (G) and GROUND.
	Is the resistance less than 10,000 ohms? **Yes** REPAIR the short circuit. For additional information, refer to the wiring diagrams. CLEAR the DTC. TEST the system for normal operation. **No** GO to B3.
B3: CHECK THE WSS TO ABS/DSC MODULE SUPPLY CIRCUIT FOR HIGH RESISTANCE	
	1 Measure the resistance between LF37, pin 33 (Y) and FR1, pin 01 (Y).
	Is the resistance greater than 5 ohms? **Yes** REPAIR the high resistance circuit. For additional information, refer to the wiring diagrams. CLEAR the DTC. TEST the system for normal operation. **No** GO to B4.
B4: CHECK THE WSS TO ABS/DSC MODULE SUPPLY CIRCUIT FOR SHORT TO GROUND	
	1 Measure the resistance between LF37, pin 33 (Y) and GROUND.
	Is the resistance less than 10,000 ohms? **Yes** REPAIR the short circuit. For additional information, refer to the wiring diagrams. CLEAR the DTC. TEST the system for normal operation. **No** INSTALL a new right-hand front wheel speed sensor. REFER to Front Wheel Speed Sensor - in this section. CLEAR the DTC. TEST the system for normal operation. If the DTC is repeated, contact dealer technical support for advice on possible ABS/DSC module failure.

PINPOINT TEST C : C1155; LEFT HAND FRONT WHEEL SPEED SENSOR (WSS) ELECTRICAL FAILURE

• NOTE: Check connectors and pins for damage/corrosion (see visual inspection).

TEST CONDITIONS	DETAILS/RESULTS/ACTIONS
C1: CHECK THE WSS TO ABS/DSC MODULE SIGNAL CIRCUIT FOR HIGH RESISTANCE	
	1 Turn the ignition switch to the **OFF** position.
	2 Disconnect the ABS/DSC module electrical connector LF37.
	3 Disconnect the WSS electrical connector FL1.
	4 Measure the resistance between LF37, pin 45 (R) and FL1, pin 2 (R).

	Is the resistance greater than 5 ohms? **Yes** REPAIR the high resistance circuit. For additional information, refer to the wiring diagrams. CLEAR the DTC. TEST the system for normal operation. **No** GO to C2.
C2: CHECK THE WSS TO ABS/DSC MODULE SIGNAL CIRCUIT FOR SHORT TO GROUND	
	1 Measure the resistance between LF37, pin 45 (R) and GROUND.
	Is the resistance less than 10,000 ohms? **Yes** REPAIR the short circuit. For additional information, refer to the wiring diagrams. CLEAR the DTC. TEST the system for normal operation. **No** GO to C3.
C3: CHECK THE WSS TO ABS/DSC MODULE SUPPLY CIRCUIT FOR HIGH RESISTANCE	
	1 Measure the resistance between LF37, pin 46 (W) and FL1, pin 01 (W).
	Is the resistance greater than 5 ohms? **Yes** REPAIR the high resistance circuit. For additional information, refer to the wiring diagrams. CLEAR the DTC. TEST the system for normal operation. **No** GO to C4.
C4: CHECK THE WSS TO ABS/DSC MODULE SUPPLY CIRCUIT FOR SHORT TO GROUND	
	1 Measure the resistance between LF37, pin 46 (W) and GROUND.
	Is the resistance less than 10,000 ohms? **Yes** REPAIR the short circuit. For additional information, refer to the wiring diagrams. CLEAR the DTC. TEST the system for normal operation. **No** INSTALL a new left-hand front wheel speed sensor. REFER to Front Wheel Speed Sensor - in this section. CLEAR the DTC. TEST the system for normal operation. If the DTC is repeated, contact dealer technical support for advice on possible ABS/DSC module failure.

PINPOINT TEST D : C1165; RIGHT HAND REAR WHEEL SPEED SENSOR (WSS) ELECTRICAL FAILURE	
• NOTE: Check connectors and pins for damage/corrosion (see visual inspection).	
TEST CONDITIONS	**DETAILS/RESULTS/ACTIONS**
D1: CHECK THE WSS TO ABS/DSC MODULE SIGNAL CIRCUIT FOR HIGH RESISTANCE	
	1 Turn the ignition switch to the **OFF** position.
	2 Disconnect the ABS/DSC module electrical connector LF37.
	3 Disconnect the WSS electrical connector RR1.
	4 Measure the resistance between LF37, pin 43 (Y) and RR1, pin 02 (Y).
	Is the resistance greater than 5 ohms? **Yes** REPAIR the high resistance circuit. For additional information, refer to the wiring diagrams. CLEAR the DTC. TEST the system for normal operation. **No** GO to D2.
D2: CHECK THE WSS TO ABS/DSC MODULE SIGNAL CIRCUIT FOR SHORT TO GROUND	
	1 Measure the resistance between LF37, pin 43 (Y) and GROUND.
	Is the resistance less than 10,000 ohms? **Yes** REPAIR the short circuit. For additional information, refer to the wiring diagrams. CLEAR the DTC. TEST the system for normal operation. **No** GO to D3.
D3: CHECK THE WSS TO ABS/DSC MODULE SUPPLY CIRCUIT FOR HIGH RESISTANCE	
	1 Measure the resistance between LF37, pin 42 (O) and RR1, pin 01 (O).
	Is the resistance greater than 5 ohms? **Yes** REPAIR the high resistance circuit. For additional information, refer to the wiring diagrams. CLEAR the DTC. TEST the system for normal operation. **No** GO to D4.
D4: CHECK THE WSS TO ABS/DSC MODULE SUPPLY CIRCUIT FOR SHORT TO GROUND	
	1 Measure the resistance between LF37, pin 42 (O) and GROUND.
	Is the resistance less than 10,000 ohms? **Yes** REPAIR the short circuit. For additional information, refer to the wiring diagrams. CLEAR the DTC. TEST the system for normal operation. **No** INSTALL a new right-hand rear wheel speed sensor. REFER to Rear Wheel Speed Sensor - in this section. CLEAR the DTC. TEST the system for normal operation. If the DTC is repeated, contact dealer technical support for advice on possible ABS/DSC module failure.

PINPOINT TEST E : C1175; LEFT HAND REAR WHEEL SPEED SENSOR (WSS) ELECTRICAL FAILURE	
• NOTE: Check connectors and pins for damage/corrosion (see visual inspection).	
TEST CONDITIONS	**DETAILS/RESULTS/ACTIONS**
E1: CHECK THE WSS TO ABS/DSC MODULE SIGNAL CIRCUIT FOR HIGH RESISTANCE	
	1 Turn the ignition switch to the **OFF** position.
	2 Disconnect the ABS/DSC module electrical connector LF37.
	3 Disconnect the WSS electrical connector RL1.
	4 Measure the resistance between LF37, pin 36 (U) and RL1, pin 02 (U).

	Is the resistance greater than 5 ohms? **Yes** REPAIR the high resistance circuit. For additional information, refer to the wiring diagrams. CLEAR the DTC. TEST the system for normal operation. **No** GO to E2.
E2: CHECK THE WSS TO ABS/DSC MODULE SIGNAL CIRCUIT FOR SHORT TO GROUND	
	1 Measure the resistance between LF37, pin 36 (U) and GROUND.
	Is the resistance less than 10,000 ohms? **Yes** REPAIR the short circuit. For additional information, refer to the wiring diagrams. CLEAR the DTC. TEST the system for normal operation. **No** GO to E3.
E3: CHECK THE WSS TO ABS/DSC MODULE SUPPLY CIRCUIT FOR HIGH RESISTANCE	
	1 Measure the resistance between LF37, pin 37 (W) and RL1, pin 01 (W).
	Is the resistance greater than 5 ohms? **Yes** REPAIR the high resistance circuit. For additional information, refer to the wiring diagrams. CLEAR the DTC. TEST the system for normal operation. **No** GO to E4.
E4: CHECK THE WSS TO ABS/DSC MODULE SUPPLY CIRCUIT FOR SHORT TO GROUND	
	1 Measure the resistance between LF37, pin 37 (W) and GROUND.
	Is the resistance less than 10,000 ohms? **Yes** REPAIR the short circuit. For additional information, refer to the wiring diagrams. CLEAR the DTC. TEST the system for normal operation. **No** INSTALL a new left-hand rear wheel speed sensor. REFER to Rear Wheel Speed Sensor - in this section. CLEAR the DTC. TEST the system for normal operation. If the DTC is repeated, contact dealer technical support for advice on possible ABS/DSC module failure.

PINPOINT TEST F : C1277, C1295; STEERING ANGLE SENSOR (SA SENSOR) 'A' AND 'B' CIRCUIT FAILURE	
• NOTE: Check connectors and pins for damage/corrosion (see visual inspection).	
TEST CONDITIONS	**DETAILS/RESULTS/ACTIONS**
F1: CHECK THE VOLTAGE SUPPLY TO THE STEERING ANGLE SENSOR	
	1 Disconnect the steering angle sensor electrical connector FP3.
	2 Turn the ignition switch to the **ON** position.
	3 Measure the voltage between FC3, pin 04 (R) and GROUND.
	Is the voltage less than 10 volts? **Yes** GO to F2. **No** GO to F3.
F2: CHECK THE STEERING ANGLE SENSOR VOLTAGE SUPPLY CIRCUIT FOR HIGH RESISTANCE	
	1 Turn the ignition switch to the **OFF** position.
	2 Disconnect the ABS/DSC module electrical connector LF37.
	3 Measure the continuity between LF37, pin 07 (R) and FC3, pin 04 (R).
	Is the resistance greater than 5 ohms? **Yes** REPAIR the high resistance circuit. This circuit includes the splice FCS18. For additional information, refer to the wiring diagrams. CLEAR the DTC. TEST the system for normal operation. **No** Contact dealer technical support for advice on possible ABS/DSC module failure.
F3: CHECK THE STEERING ANGLE SENSOR GROUND SUPPLY CIRCUIT	
	1 Turn the ignition switch to the **OFF** position.
	2 Reconnect the ABS/DSC module electrical connector LF37.
	3 Disconnect the yaw/lateral rate sensor electrical connector FP101.
	4 Turn the ignition switch to the **ON** position.
	5 Measure the resistance between FC3, pin 01 (BK) and GROUND.
	Is the resistance greater than 5 ohms? **Yes** REPAIR the high resistance circuit. This circuit includes the splice FCS21. For additional information, refer to the wiring diagrams. CLEAR the DTC. TEST the system for normal operation. **No** GO to F4.
F4: CHECK THE STEERING ANGLE SENSOR SIGNAL CIRCUIT 'A' FOR HIGH RESISTANCE	
	1 Turn the ignition switch to the **OFF** position.
	2 Disconnect the ABS/DSC module electrical connector LF37.
	3 Measure the resistance between LF37, pin 03 (Y) and FC3 pin 03 (Y).
	Is the resistance greater than 5 ohms? **Yes** GO to F5. **No** REPAIR the high resistance circuit. For additional information, refer to the wiring diagrams. CLEAR the DTC. TEST the system for normal operation.
F5: CHECK THE STEERING ANGLE SENSOR SIGNAL CIRCUIT 'B' FOR HIGH RESISTANCE	
	1 Measure the resistance between LF37, pin 06 (U) and FC3, pin 02 (U).
	Is the resistance greater than 5 ohms? **Yes** GO to F6. **No** REPAIR the high resistance circuit. For additional information, refer to the wiring diagrams. CLEAR the DTC. TEST the

	system for normal operation.
F6: CHECK THE STEERING ANGLE SENSOR SIGNAL CIRCUIT 'A' FOR SHORT TO GROUND	
	1 Measure the resistance between FC3, pin 03 (Y) and GROUND.
	Is the resistance less than 10,000 ohms? **Yes** REPAIR the short circuit. For additional information, refer to the wiring diagrams. CLEAR the DTC. TEST the system for normal operation. **No** GO to F7.
F7: CHECK THE STEERING ANGLE SENSOR SIGNAL CIRCUIT 'B' FOR SHORT TO GROUND	
	1 Measure the resistance between FC3, pin 02 (U) and GROUND.
	Is the resistance less than 10,000 ohms? **Yes** REPAIR the short circuit. For additional information, refer to the wiring diagrams. CLEAR the DTC. TEST the system for normal operation. **No** GO to F8.
F8: CHECK THE STEERING ANGLE SENSOR SIGNAL CIRCUITS 'A' AND 'B' FOR SHORT TO EACH OTHER	
	1 Measure the resistance between FC3, pin 03 (Y) FC3, pin 02 (U).
	Is the resistance less than 5 ohms? **Yes** REPAIR the short circuit. For additional information, refer to the wiring diagrams. CLEAR the DTC. TEST the system for normal operation. **No** INSTALL a new steering angle sensor. CLEAR the DTC. TEST the system for normal operation. If the DTC is repeated, contact dealer technical support for advice on possible ABS/DSC module failure.

PINPOINT TEST G : C1279, C1281, C2778, C2785, B2741; LATERAL/YAW RATE CIRCUIT FAILURE	
• NOTE: For CAN circuit tests, REFER to section 418-00.	
• NOTE: Check the yaw rate sensor cluster for correct installation (see visual inspection).	
• NOTE: Check connectors and pins for damage/corrosion (see visual inspection).	
TEST CONDITIONS	**DETAILS/RESULTS/ACTIONS**
G1: CHECK THE VOLTAGE SUPPLY TO THE LATERAL/YAW RATE SENSOR	
	1 Disconnect the yaw/lateral rate sensor electrical connector FC101.
	2 Turn the ignition switch to the **ON** position.
	3 Measure the voltage between FC101, pin 03 (R) and GROUND.
	Is the voltage less than 10 volts? **Yes** GO to G2. **No** GO to G4.
G2: CHECK THE YAW/LATERAL RATE SENSOR VOLTAGE SUPPLY CIRCUIT FOR HIGH RESISTANCE	
	1 Turn the ignition switch to the **OFF** position.
	2 Disconnect the ABS/DSC module electrical connector LF37.
	3 Measure the resistance between FC101, pin 03 (R) and LF37, pin 07 (R).
	Is the resistance greater than 5 ohms? **Yes** REPAIR the high resistance circuit. This circuit includes the splice FCS21. For additional information, refer to the wiring diagrams. CLEAR the DTC. TEST the system for normal operation. **No** GO to G3.
G3: CHECK THE YAW/LATERAL RATE SENSOR VOLTAGE SUPPLY CIRCUIT FOR SHORT TO GROUND	
	1 Measure the resistance between FC101, pin 03 (R) and GROUND.
	Is the resistance less than 10,000 ohms? **Yes** REPAIR the short circuit. This circuit includes the splice FCS21. For additional information, refer to the wiring diagrams. CLEAR the DTC. TEST the system for normal operation. **No** Contact dealer technical support for advice on possible ABS/DSC module failure.
G4: CHECK THE GROUND TO THE YAW/LATERAL RATE SENSOR	
	1 Measure the resistance between FC101, pin 05 (BK) and GROUND.
	Is the resistance greater than 5 ohms? **Yes** GO to G5. **No** GO to G6.
G5: CHECK THE YAW/LATERAL RATE SENSOR GROUND CIRCUIT FOR HIGH RESISTANCE	
	1 Turn the ignition switch to the **OFF** position.
	2 Disconnect the ABS/DSC module electrical connector LF37.
	3 Measure the resistance between FC101, pin 05 (BK) and LF37, pin 05 (BK).
	Is the resistance greater than 5 ohms? **Yes** REPAIR the high resistance circuit. This circuit includes the splice FCS18. For additional information, refer to the wiring diagrams. CLEAR the DTC. TEST the system for normal operation. **No** GO to G6.
G6: CHECK THE YAW/LATERAL RATE SENSOR GROUND CIRCUIT FOR SHORT TO B+	
	1 Measure the voltage between FC101, pin 05 (BK) and GROUND.
	Is the voltage greater than 3 volts? **Yes** REPAIR the short circuit. This circuit includes the splice FCS18. For additional information, refer to the wiring diagrams. CLEAR the DTC. TEST the system for normal operation. **No** Contact dealer technical support for advice on possible ABS/DSC module failure.

PINPOINT TEST H : C1285; ACTIVE BOOSTER SOLENOID CIRCUIT FAILURE	
• NOTE: Check connectors and pins for damage/corrosion (see visual inspection).	
TEST CONDITIONS	**DETAILS/RESULTS/ACTIONS**
H1: CHECK THE ACTIVE BOOSTER SOLENOID SUPPLY VOLTAGE	
	1 Disconnect the booster solenoid electrical connector, AL01.
	2 Turn the ignition switch to the **ON** position.
	3 Measure the voltage between AL01, pin 04 (WR) and GROUND.
	Is the voltage less than 10 volts? **Yes** GO to H2. **No** GO to H4.
H2: CHECK THE ACTIVE BOOSTER SOLENOID SUPPLY CIRCUIT FOR HIGH RESISTANCE	
	1 Turn the ignition switch to the **OFF** position.
	2 Disconnect the ABS/DSC module electrical connector LF37.
	3 Measure the resistance between AL01, pin 04 (WR) and LF37, pin 17 (WR).
	Is the resistance greater than 5 ohms? **Yes** REPAIR the high resistance circuit. For additional information, refer to the wiring diagrams. CLEAR the DTC. TEST the system for normal operation. **No** GO to H3.
H3: CHECK THE ACTIVE BOOSTER SOLENOID SUPPLY CIRCUIT FOR SHORT TO GROUND	
	1 Measure the resistance between AL01 pin 04 (WR) and GROUND.
	Is the resistance less than 10,000 ohms? **Yes** REPAIR the short circuit. For additional information, refer to the wiring diagrams. CLEAR the DTC. TEST the system for normal operation. **No** Contact dealer technical support for advice on possible ABS/DSC module failure.
H4: CHECK THE ACTIVE BOOSTER SOLENOID SIGNAL CIRCUIT FOR HIGH RESISTANCE	
	1 Disconnect the ABS/DSC module electrical connector LF37.
	2 Measure the resistance between AL01, pin 03 (NR) and LF37, pin 31 (NR).
	Is the resistance greater than 5 ohms? **Yes** REPAIR the high resistance circuit. For additional information, refer to the wiring diagrams. CLEAR the DTC. TEST the system for normal operation. **No** GO to H5.
H5: CHECK THE ACTIVE BOOSTER SOLENOID SIGNAL CIRCUIT FOR SHORT TO GROUND	
	1 Measure the resistance between AL01, pin 03 (NR) and GROUND.
	Is the resistance less than 10,000 ohms? **Yes** REPAIR the short circuit. For additional information, refer to the wiring diagrams. CLEAR the DTC. TEST the system for normal operation. **No** Contact dealer technical support for advice on possible active booster failure. CLEAR the DTC. TEST the system for normal operation. If the DTC is repeated, contact dealer technical support for advice on possible ABS/DSC module failure.

PINPOINT TEST I : C1286,C1287; PEDAL FORCE SWITCH CIRCUIT FAILURE	
• NOTE: Check connectors and pins for damage/corrosion (see visual inspection).	
TEST CONDITIONS	**DETAILS/RESULTS/ACTIONS**
I1: CHECK THE PEDAL FORCE SWITCH FUNCTION NORMALLY CLOSED	
	1 Disconnect the brake pedal force switch electrical connector AL01.
	2 With the brake pedal in the rest position, measure the resistance between pins 02 and 05 of the switch.
	Is the resistance greater than 5 ohms? **Yes** Contact dealer technical support for advice on possible active booster failure. CLEAR the DTC. TEST the system for normal operation. **No** GO to I2.
I2: CHECK THE PEDAL FORCE SWITCH FUNCTION NORMALLY OPEN	
	1 With the brake pedal depressed, measure the resistance between pins 03 and 05 of the switch.
	Is the resistance greater than 5 ohms? **Yes** Contact dealer technical support for advice on possible active booster failure. CLEAR the DTC. TEST the system for normal operation. **No** GO to I3.
I3: CHECK THE PEDAL FORCE SWITCH SUPPLY VOLTAGE	
	1 Turn the ignition switch to the **ON** position.
	2 Measure the voltage between AL01, pin 05 (NG) and GROUND.
	Is the voltage less than 10 volts? **Yes** GO to I4. **No** GO to I6.
I4: CHECK THE PEDAL FORCE SWITCH SUPPLY CIRCUIT FOR HIGH RESISTANCE	
	1 Turn the ignition switch to the **OFF** position.
	2 Disconnect the ABS/DSC module electrical connector LF37.
	3 Measure the resistance between AL01, pin 05 (NG) and LF37, pin 28 (NG).

	Is the resistance greater than 5 ohms? **Yes** GO to I5. **No** REPAIR the high resistance circuit. For additional information, refer to the wiring diagrams. CLEAR the DTC. TEST the system for normal operation.
I5: CHECK THE PEDAL FORCE SWITCH SUPPLY CIRCUIT FOR SHORT TO GROUND	
	1 Measure the resistance between AL01, pin 5 (NG) and GROUND.
	Is the resistance less than 10,000 ohms? **Yes** REPAIR the short circuit. For additional information, refer to the wiring diagrams. CLEAR the DTC. TEST the system for normal operation. **No** Contact dealer technical support for advice on possible ABS/DSC module failure.
I6: CHECK THE BRAKE PEDAL FORCE SWITCH SIGNAL (NC) CIRCUIT FOR HIGH RESISTANCE	
	1 Measure the resistance between AL01, pin 02 (YR) and LF37, pin 30 (YR).
	Is the resistance greater than 5 ohms? **Yes** REPAIR the high resistance circuit. For additional information, refer to the wiring diagrams. CLEAR the DTC. TEST the system for normal operation. **No** GO to I7.
I7: CHECK THE BRAKE PEDAL FORCE SWITCH SIGNAL CIRCUIT (NC) FOR SHORT TO GROUND	
	1 Measure the resistance between AL01, pin 02 (YR) and GROUND.
	Is the resistance less than 10,000 ohms? **Yes** REPAIR the short circuit. For additional information, refer to the wiring diagrams. CLEAR the DTC. TEST the system for normal operation. **No** GO to I8.
I8: CHECK THE BRAKE PEDAL FORCE SWITCH SIGNAL CIRCUIT (NO) FOR HIGH RESISTANCE	
	1 Measure the resistance between AL01, pin 01 (WG) and LF37, pin 27 (WG).
	Is the resistance greater than 5 ohms? **Yes** REPAIR the high resistance circuit. For additional information, refer to the wiring diagrams. CLEAR the DTC. TEST the system for normal operation. **No** GO to I9.
I9: CHECK THE BRAKE PEDAL FORCE SWITCH SIGNAL CIRCUIT (NO) FOR SHORT TO GROUND	
	1 Measure the resistance between AL01, pin 01 (WG) and GROUND.
	Is the resistance less than 10,000 ohms? **Yes** REPAIR the short circuit. For additional information, refer to the wiring diagrams. CLEAR the DTC. TEST the system for normal operation. **No** Contact dealer technical support for advice on possible active booster failure. CLEAR the DTC. TEST the system for normal operation. If the DTC is repeated, contact dealer technical support for advice on possible ABS/DSC module failure.

PINPOINT TEST J : B1231, C1288, C1440, C1997; PRESSURE SENSOR MAIN/PRIMARY 5 VOLT SUPPLY CIRCUIT FAILURE

• NOTE: Check connectors and pins for damage/corrosion (see visual inspection).

TEST CONDITIONS	DETAILS/RESULTS/ACTIONS
J1: CHECK THE PRESSURE SENSOR 5 VOLT SUPPLY	
	1 Turn the ignition switch to the **OFF** position.
	2 Disconnect the pressure sensor electrical connector AL02.
	3 Turn the ignition switch to the **ON** position.
	4 Measure the voltage between AL02, pin 01 (NW) and GROUND.
	5 Measure the voltage between AL02, pin 03 (YB) and GROUND.
	Is either voltage less than 5 volts? **Yes** GO to J2. **No** GO to J4.
J2: CHECK THE PRESSURE SENSOR 5 VOLT SUPPLY CIRCUIT FOR HIGH RESISTANCE	
	1 Turn the ignition switch to the **OFF** position.
	2 Disconnect the ABS/DSC module electrical connector LF37.
	3 Measure the resistance between the AL02, pin 03 (YB) and LF37, pin 18 (YB).
	Is the resistance greater than 5 ohms? **Yes** REPAIR the high resistance circuit. For additional information, refer to the wiring diagrams. CLEAR the DTC. TEST the system for normal operation. **No** GO to J3.
J3: CHECK THE PRESSURE SENSOR 5 VOLT SUPPLY CIRCUIT FOR SHORT TO GROUND	
	1 Measure the resistance between AL02, pin 03 (YB) and GROUND.
	Is the resistance less than 10,000 ohms? **Yes** REPAIR the short circuit. For additional information, refer to the wiring diagrams. CLEAR the DTC. TEST the system for normal operation. **No** GO to J6.
J4: CHECK THE GROUND TO THE PRESSURE SENSOR	
	1 Measure the resistance between AL02, pin 01 (NW) and GROUND.

	Is the resistance greater than 5 ohms? **Yes** GO to J5. **No** Contact dealer technical support for advice on possible ABS/DSC module failure.
J5: CHECK THE PRESSURE SENSOR GROUND CIRCUIT FOR HIGH RESISTANCE	
	1 Measure the resistance between AL02, pin 01 (NW) and LF37, pin 19 (NW).
	Is the resistance greater than 5 ohms? **Yes** REPAIR the high resistance circuit. For additional information, refer to the wiring diagrams. CLEAR the DTC. TEST the system for normal operation. **No** Contact dealer technical support for advice on possible ABS/DSC module failure.
J6: CHECK THE PRESSURE SENSOR GROUND CIRCUIT FOR SHORT TO B+	
	1 Measure the voltage between the pressure sensor electrical connector AL02, pin 01 (NW) and GROUND.
	Is the voltage greater than 3 volts? **Yes** REPAIR the circuit. For additional information, refer to the wiring diagrams. CLEAR the DTC. TEST the system for normal operation. **No** GO to J7.
J7: CHECK THE PRESSURE SENSOR SIGNAL CIRCUIT FOR HIGH RESISTANCE	
	1 Measure the resistance between AL02, pin 02 (WB) and LF37, pin 20 (WB).
	Is the resistance greater than 5 ohms? **Yes** REPAIR the high resistance circuit. For additional information, refer to the wiring diagrams. CLEAR the DTC. TEST the system for normal operation. **No** GO to J8.
J8: CHECK THE PRESSURE SENSOR SIGNAL CIRCUIT FOR SHORT TO GROUND	
	1 Measure the resistance between AL02, pin 02 (WB) and GROUND.
	Is the resistance less than 10,000 ohms? **Yes** REPAIR the short circuit. For additional information, refer to the wiring diagrams. CLEAR the DTC. TEST the system for normal operation. **No** GO to J9.
J9: CHECK THE PRESSURE SENSOR SIGNAL CIRCUIT FOR SHORT TO B+	
	1 Measure the voltage between AL02, pin 02 (WB) and GROUND.
	Is the voltage greater than 5 volts? **Yes** REPAIR the short circuit. For additional information, refer to the wiring diagrams. CLEAR the DTC. TEST the system for normal operation. **No** INSTALL a new pressure sensor. CLEAR the DTC. TEST the system for normal operation. If the DTC is repeated, contact dealer technical support for advice on possible ABS/DSC module failure.

PINPOINT TEST K : C2736, B2736, B2739; PEDAL TRAVEL SENSOR CIRCUIT FAILURE

• NOTE: Check connectors and pins for damage/corrosion (see visual inspection).

TEST CONDITIONS	DETAILS/RESULTS/ACTIONS
K1: CHECK THE PEDAL TRAVEL SENSOR SUPPLY VOLTAGE	
	1 Disconnect the brake pedal travel sensor electrical connector AL04.
	2 Turn the ignition switch to the **ON** position.
	3 Measure the voltage between AL04, pin 01 (NW) and GROUND.
	Is the voltage less than 10 volts? **Yes** GO to K2. **No** GO to K4.
K2: CHECK THE PEDAL TRAVEL SENSOR SUPPLY CIRCUIT FOR HIGH RESISTANCE	
	1 Turn the ignition switch to the **OFF** position.
	2 Disconnect the ABS/DSC module electrical connector LF37.
	3 Measure the resistance between AL04, pin 01 NW) and LF37, pin 26 (NW).
	Is the resistance greater than 5 ohms? **Yes** REPAIR the high resistance circuit. For additional information, refer to the wiring diagrams. CLEAR the DTC. TEST the system for normal operation. **No** GO to K3.
K3: CHECK THE PEDAL TRAVEL SENSOR SUPPLY CIRCUIT FOR SHORT TO GROUND	
	1 Measure the resistance between AL04, pin 01 (NW) and GROUND.
	Is the resistance less than 10,000 ohms? **Yes** REPAIR the short circuit. For additional information, refer to the wiring diagrams. CLEAR the DTC. TEST the system for normal operation. **No** Contact dealer technical support for advice on possible ABS/DSC module failure.
K4: CHECK THE PEDAL TRAVEL SENSOR GROUND CIRCUIT FOR HIGH RESISTANCE	
	1 Measure the resistance between AL04, pin 02 (WU) and LF37, pin 24 (WU).
	Is the resistance greater than 5 ohms? **Yes** REPAIR the high resistance circuit. For additional information, refer to the wiring diagrams. CLEAR the DTC. TEST the system for normal operation. **No** GO to K5.
K5: CHECK THE PEDAL TRAVEL SENSOR GROUND SUPPLY CIRCUIT	

	1 Turn the ignition switch to the **OFF** position.
	2 Reconnect the ABS/DSC module electrical connector LF37.
	3 Turn the ignition switch to the **ON** position.
	4 Measure the resistance between AL04, pin 02 (WU) and GROUND.
	Is the resistance greater than 5 ohms? **Yes** Contact dealer technical support for advice on possible ABS/DSC module failure. **No** GO to K6.
K6: CHECK THE PEDAL TRAVEL SENSOR GROUND CIRCUIT FOR SHORT TO B+	
	1 Measure the voltage between AL04, pin 02 (WU) and GROUND.
	Is the voltage greater than 3 volts? **Yes** REPAIR the short circuit. For additional information, refer to the wiring diagrams. CLEAR the DTC. TEST the system for normal operation. **No** GO to K7.
K7: CHECK THE PEDAL TRAVEL SENSOR SIGNAL CIRCUIT FOR HIGH RESISTANCE	
	1 Turn the ignition switch to the **OFF** position.
	2 Disconnect the ABS/DSC module electrical connector LF37.
	3 Measure the resistance between AL04, pin 03 (YU) and LF37, pin 40 (YU).
	Is the resistance greater than 5 ohms? **Yes** REPAIR the high resistance circuit. For additional information, refer to the wiring diagrams. CLEAR the DTC. TEST the system for normal operation. **No** GO to K8.
K8: CHECK THE PEDAL TRAVEL SENSOR SIGNAL CIRCUIT FOR SHORT TO GROUND	
	1 Measure the resistance between AL04, pin 03 (YU) and GROUND.
	Is the resistance less than 10,000 ohms? **Yes** REPAIR the short circuit. For additional information, refer to the wiring diagrams. CLEAR the DTC. TEST the system for normal operation. **No** GO to K9.
K9: CHECK THE PEDAL TRAVEL SENSOR SIGNAL SIGNAL CIRCUIT FOR SHORT TO B+	
	1 Measure the voltage between AL04, pin 03 (YU) and GROUND.
	Is the voltage greater than 3 volts? **Yes** REPAIR the short circuit. For additional information, refer to the wiring diagrams. CLEAR the DTC. TEST the system for normal operation. **No** Contact dealer technical support for advice on possible active booster failure. REFER to Section 206-07 Power Brake Actuation. CLEAR the DTC. TEST the system for normal operation. If the DTC is repeated, contact dealer technical support for advice on possible ABS/DSC module failure.

PINPOINT TEST L : C1446; BRAKE LIGHT SWITCH CIRCUIT FAILURE	
• NOTE: Check the brake light function before beginning pinpoint tests.	
• NOTE: Check connectors and pins for damage/corrosion (see visual inspection).	
TEST CONDITIONS	**DETAILS/RESULTS/ACTIONS**
L1: CHECK THE STOP LAMP RELAY VOLTAGE SUPPLY CIRCUIT	
	1 Remove the stop lamp relay.
	2 Turn the ignition switch to the **ON** position.
	3 Measure the voltage between relay base, pins 01 and 03 and GROUND.
	Is either voltage less than 10 volts? **Yes** REPAIR the circuit. This circuit includes the ignition positive relay and the high power protection relay. For additional information, refer to the wiring diagrams. CLEAR the DTC. TEST the system for normal operation. **No** GO to L2.
L2: CHECK THE BRAKE ON/OFF SWITCH IGNITION SWITCHED GROUND	
	1 Turn the ignition switch to the **ON** position.
	2 Depress the brake pedal.
	3 Measure the resistance between relay base, pin 02 and GROUND.
	Is the resistance greater than 5 ohms? **Yes** REPAIR the high resistance circuit. This circuit includes the brake on/off switch. For additional information, refer to the wiring diagrams. CLEAR the DTC. TEST the system for normal operation. **No** GO to L3.
L3: CHECK THE STOP LAMP RELAY TO ECM CIRCUIT FOR HIGH RESISTANCE	
	1 Turn the ignition switch to the **OFF** position.
	2 Disconnect the battery negative terminal.
	3 Disconnect the ECM electrical connector, EM80.
	4 Measure the resistance between EM80, pin 08 (U) and the relay base, pin 05.
	Is the resistance greater than 5 ohms? **Yes** REPAIR the high resistance circuit. This circuit includes the luggage compartment fuse box (fuse 08). For additional information, refer to the wiring diagrams. CLEAR the DTC. TEST the system for normal operation. **No** GO to L4.
L4: CHECK THE STOP LAMP RELAY TO ECM CIRCUIT FOR SHORT TO GROUND	
	1 Reconnect the battery negative terminal.
	2 Measure the resistance between EM80, pin 08 (U) and GROUND.

	Is the resistance less than 10,000 ohms? **Yes** REPAIR the short circuit. For additional information, refer to the wiring diagrams. CLEAR the DTC. TEST the system for normal operation. **No** Contact dealer technical support for advice on possible ECM failure.

Published: 11-May-2011

Anti-Lock Control - Stability Assist - Anti-Lock Brake System (ABS) Module

Removal and Installation

Removal

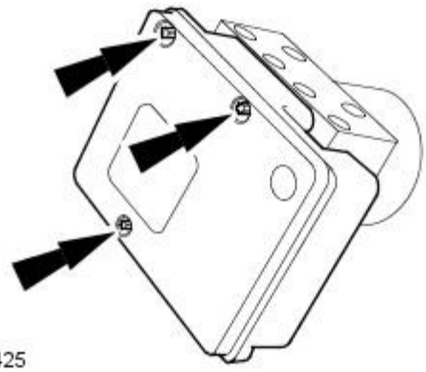

E40425

1. Remove the hydraulic control unit (HCU).
   For additional information, refer to Hydraulic Control Unit (HCU) - in this section.
2. Remove the anti-lock brake system (ABS) module.

Installation

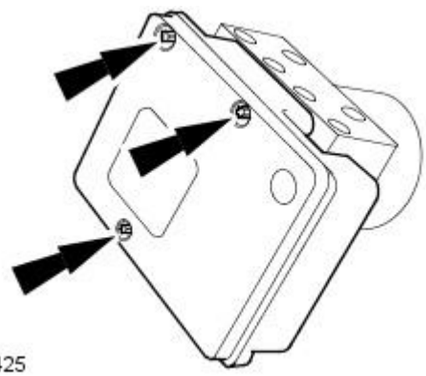

E40425

1. To install, reverse the removal procedure.
   - Tighten to 3 Nm.

Anti-Lock Control - Stability Assist - Brake Master Cylinder Pressure Transducer

Removal and Installation

Removal

1. Remove the brake pedal and bracket, brake booster and brake master cylinder.
   For additional information, refer to Section 206-06 Hydraulic Brake Actuation.
2. Disconnect the brake master cylinder pressure transducer electrical connector.

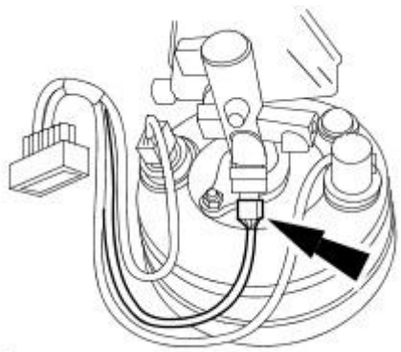

E40449

3. Remove the brake master cylinder pressure transducer.

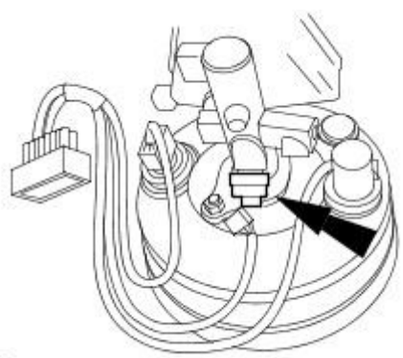

E40450

Installation

1. To install, reverse the removal procedure.
   - Tighten to 30 Nm.

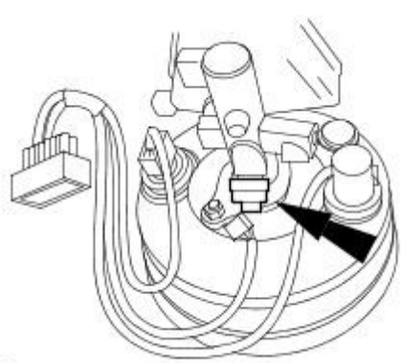

E40450

Published: 11-May-2011

Anti-Lock Control - Stability Assist - Front Wheel Speed Sensor

Removal and Installation

Removal

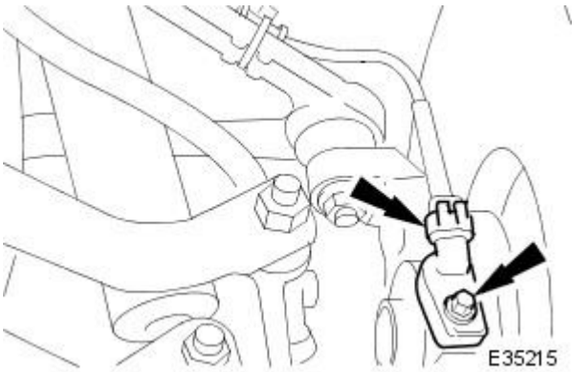

1. Raise front of vehicle and support on stands.
For additional information, refer to Section 100-02 Jacking and Lifting.

2. Remove wheel speed sensor.

- Disconnect harness connector.
- Remove bolt.

3. Clean components and mating surfaces.

Installation

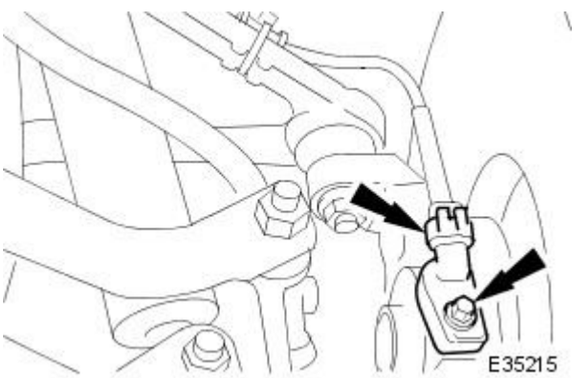

1. Install wheel speed sensor.

- Position sensor.
- Install and tighten bolt to 8-10 Nm.
- Connect harness connector.

2. Remove stands and lower vehicle.

Anti-Lock Control - Stability Assist - Front Wheel Speed Sensor Ring

Removal and Installation

Special Tool(s)	
E36410	Hub Holding Tool 204-195 (JD 227)
E36443	ABS Rotor Nut Socket 206-066A

Removal

CAUTION: Replacement of nuts and bolts: Various thread-locking devices are used on nuts and bolts throughout the vehicle. These devices restrict the number of times a nut or bolt can be used. See section 100-00 for information.

1. Open engine compartment and install paintwork protectors to fenders.
2. Raise front of vehicle and support on stands.
   For additional information, refer to Section 100-02 Jacking and Lifting.
3. Remove front wheel.
   For additional information, refer to Section 204-04 Wheels and Tires.
4. Remove front brake disc.
   For additional information, refer to Section 206-03 Front Disc Brake.
5. Remove vertical link and hub assembly.
   For additional information, refer to Section 204-01 Front Suspension.
6. Remove brake-disc shield from vertical link.
   1. Remove screws.
   2. Remove disc shield.

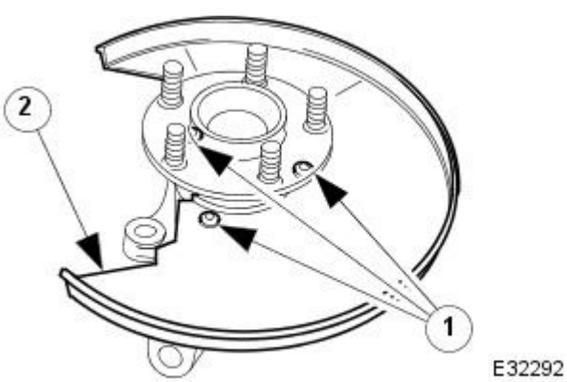

7. Using special tool, secure vertical link and hub assembly in a vice.
   - Secure special tool in a vice.
   - Position hub in tool.
   - Install and tighten wheel nuts.

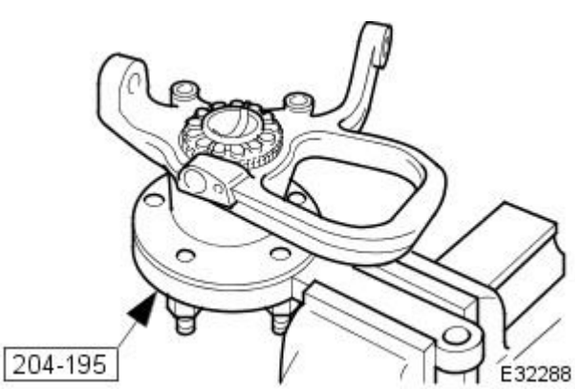

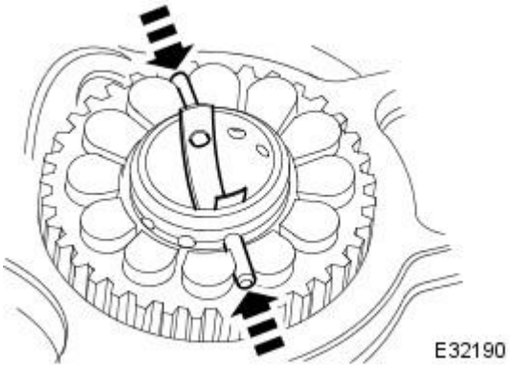

8. Remove rotor nut spring-clip.

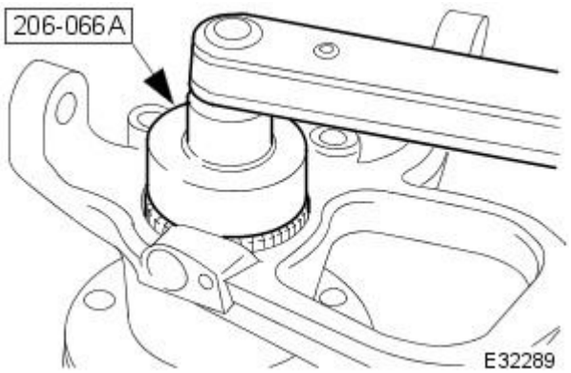

9. Using special tool remove rotor nut.

Installation

1. If necessary, install a grease deflector ring to the rotor nut. Refer to 70.60.26.

2. Install rotor nut to hub.

1. Install rotor nut.
2. Using special tool tighten rotor nut.

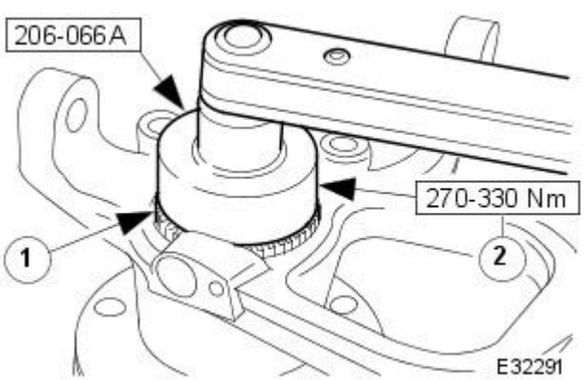

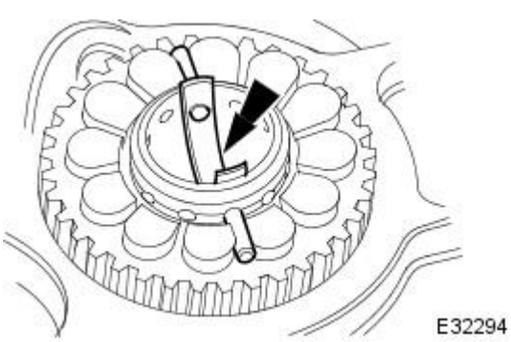

3. CAUTION: Do not slacken the rotor nut to engage the spring clip.

Install rotor nut spring-clip.

- Install spring clip into the hub retaining holes and, if aligned, into the castellated slots of the rotor nut.
- If the castellated slots of the rotor nut are not aligned it will be necessary to tighten the rotor nut further until the spring clip engages the slots.

4. Remove vertical link and hub assembly from special tool.

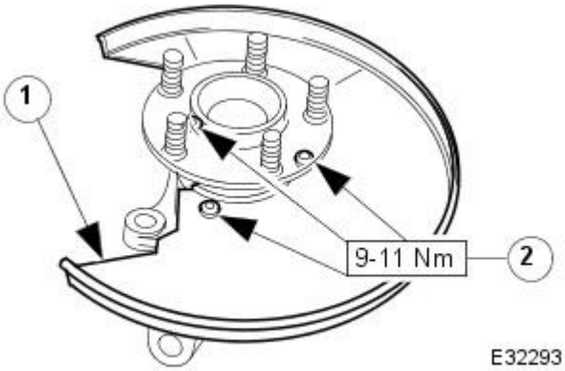

5. Install disc shield to vertical link.

1. Position disc shield.
2. Install and tighten bolts.

6. Install vertical link and hub assembly to vehicle.
For additional information, refer to Section 204-01 Front Suspension.

7. Install brake disc.
For additional information, refer to Section 206-03 Front Disc Brake.

8. Install wheel.
For additional information, refer to Section 204-04 Wheels and Tires.

9. Remove stands and lower vehicle.

Anti-Lock Control - Stability Assist - Hydraulic Control Unit (HCU)

Removal and Installation

Special Tool(s)	
E36399	Brake Pedal Hold Tool JDS 9013

Removal

• CAUTIONS:

Replacement of nuts and bolts: Various thread-locking devices are used on nuts and bolts throughout the vehicle. These devices restrict the number of times a nut or bolt can be used.
For additional information, refer to Section 100-00 General Information.

Remove brake fluid spillage immediately from paint work, with clean water.

1. Disconnect the battery ground cable.
   For additional information, refer to Section 414-01 Battery, Mounting and Cables.
2. Raise and support the vehicle.
   For additional information, refer to Section 100-02 Jacking and Lifting.
3. Open engine compartment and fit paint work protection covers to fenders.
4. NOTE: The following three pictorial procedures must be carried-out to minimize brake fluid loss when disconnecting the brake tubes.

   Open Left-Hand-Front and Left-Hand-Rear caliper bleed nipples.

   - Connect a bleed tube and container to the calipers.
   - Open bleed nipples.

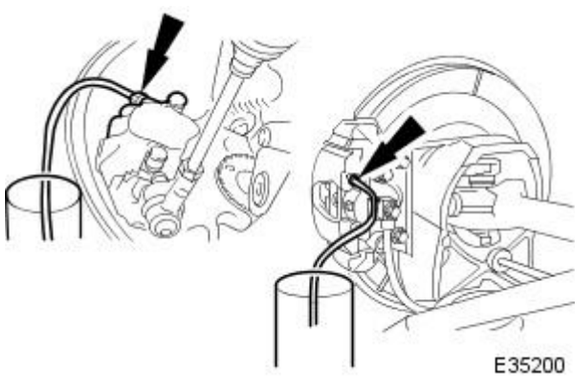

5. Depress and hold down the brake pedal to the specified position using the special tool.

   1. Position tool between brake pedal and seat frame.
   2. Turn the tool wheel until the brake pedal is held 60mm down from its released position.

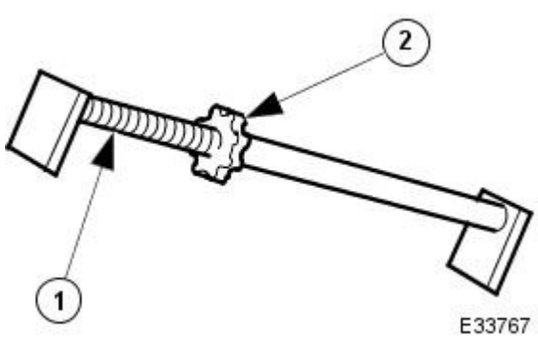

6. Tighten bleed nipples to:

   - Front caliper bleed nipple 4-6 Nm.
   - Rear caliper bleed nipple 8-11 Nm.
   - Remove bleed tubes and containers.

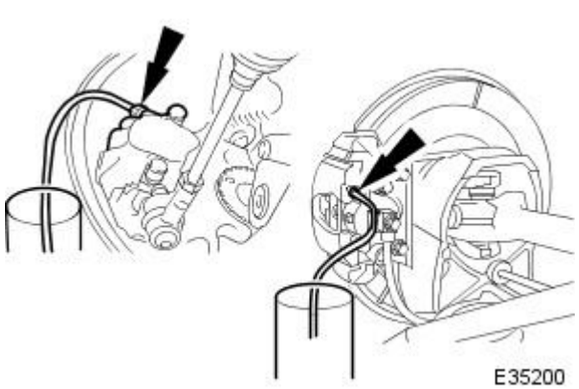

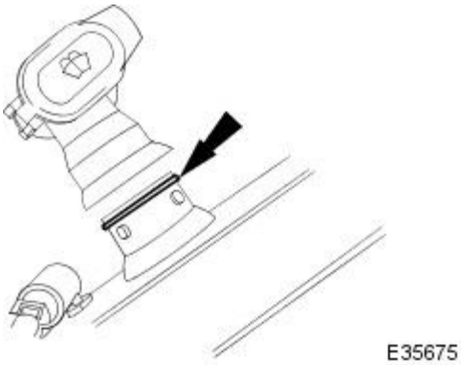

7. Remove the windshield washer reservoir elbow.

- Remove and discard the O-ring seal.

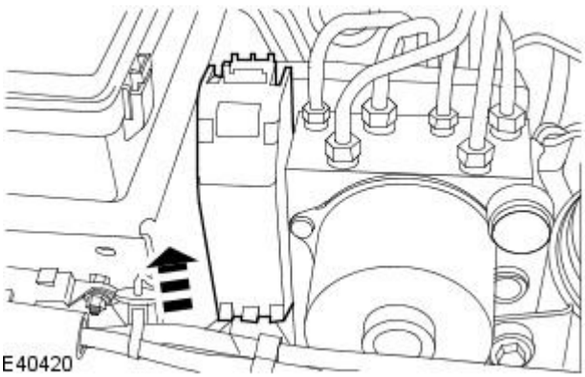

8. Disconnect the hydraulic control unit (HCU) electrical connector.

9. Place an absorbent cloth under the HCU to absorb any brake fluid spillage.

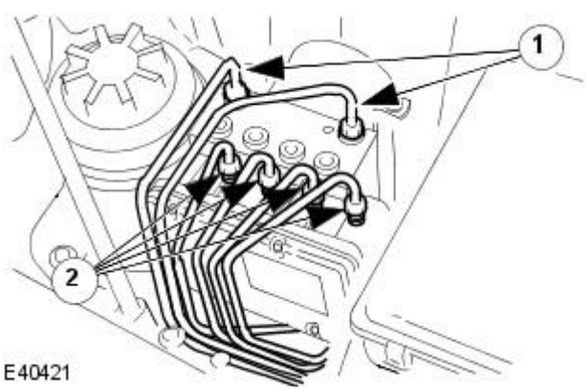

10. CAUTION: Remove brake fluid spillage immediately from paint work, with clean water.

• NOTE: To minimize brake fluid loss, release the brake tubes in the order shown.

Release brake tubes.

1. Undo union nuts and release inlet brake tubes.
    1. Install plugs to inlet ports and brake tubes.
2. Undo union nuts and release outlet brake tubes.
    1. Install plugs to outlet ports and brake tubes.

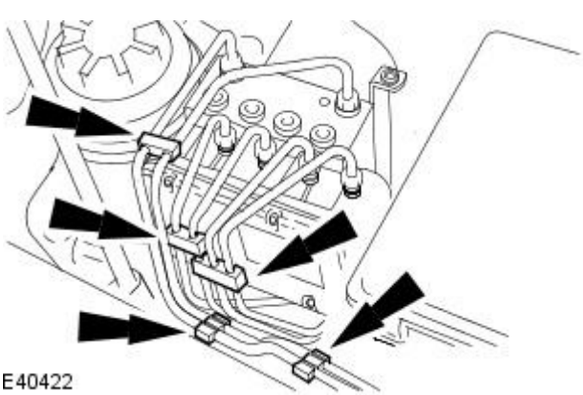

11. Detach the brake tubes from the retaining clips.

12. Remove the HCU.

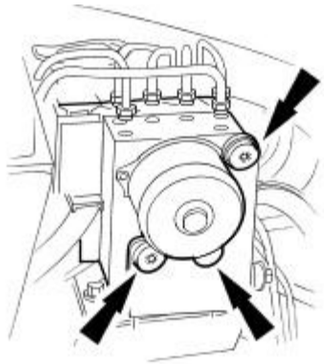

E40423

Installation

1. NOTE: The replacement HCU is pre-filled with brake fluid.

Install the HCU.

- Tighten to 9 Nm.

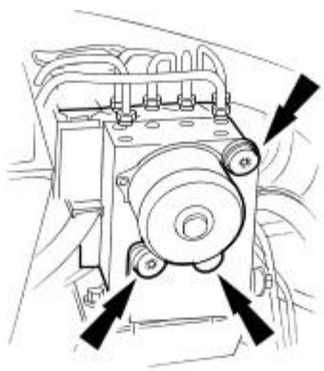

E40423

2. Attach the brake lines to the retaining clips.

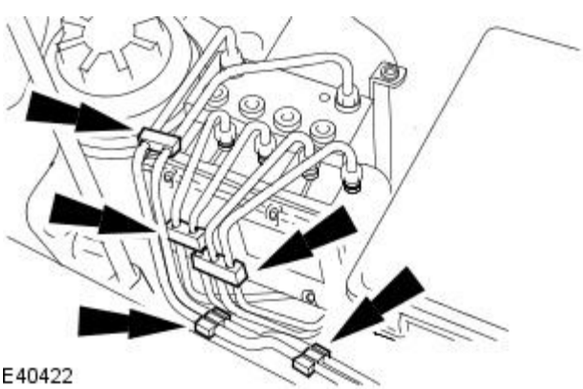

E40422

3. NOTE: To minimize brake fluid loss, install the brake tubes in the order shown.

Install brake tubes.

- NOTE: Remove plugs from outlet ports and brake tubes.

  1. Install and tighten the brake-tube union nuts.
     1. Tighten the 11mm brake tube union nuts to 16 Nm
     2. Tighten the 13mm brake tube union nuts to 17 Nm

- NOTE: Remove plugs from inlet ports and brake tubes.

  2. Install and tighten the brake-tube union nuts.
     1. Tighten the 13mm brake-tube union nuts to 17 Nm.

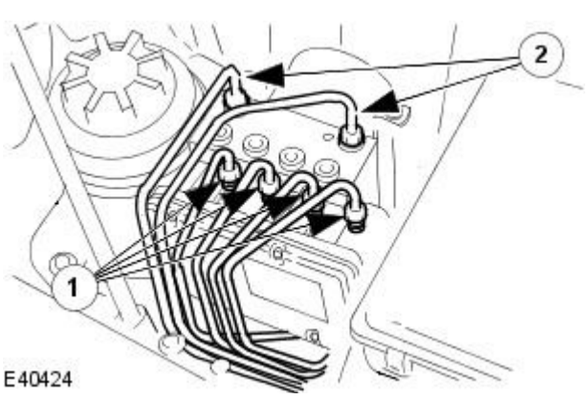

E40424

4. Remove and dispose of the absorbent cloth whilst complying to local health and safety standards.

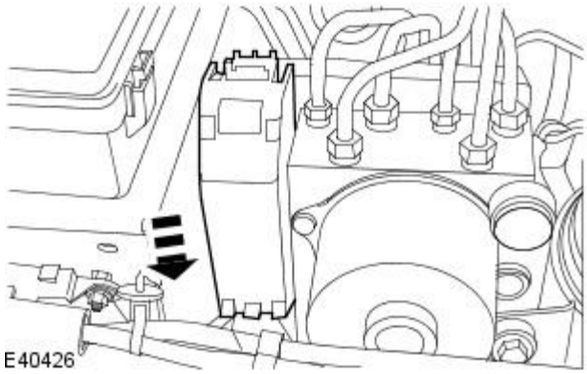

5. Connect the HCU electrical connector.

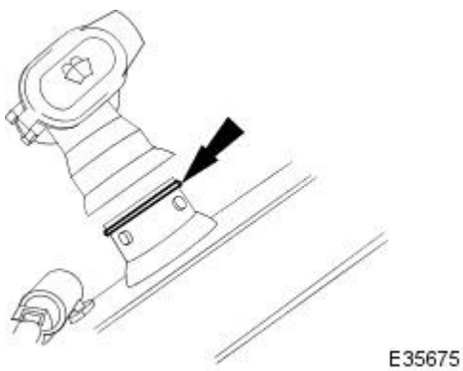

6. NOTE: Install a new O-ring seal.

Install the windshield washer reservoir elbow.

7. Remove the brake pedal hold tool.

8. Connect the battery ground cable.
For additional information, refer to Section 414-01 Battery, Mounting and Cables.

9. Bleed the brake system.
For additional information, refer to Section 206-00 Brake System - General Information.

Published: 11-May-2011

Anti-Lock Control - Stability Assist - Rear Wheel Speed Sensor

Removal and Installation

Removal

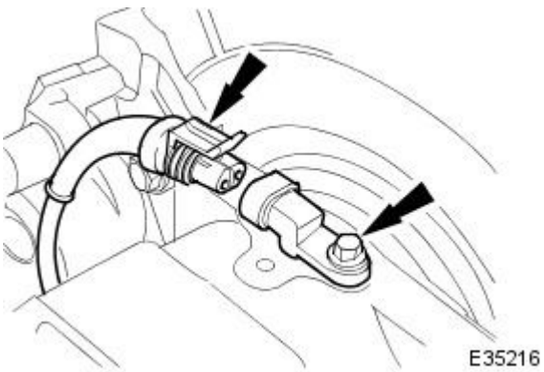

1. Raise rear of vehicle and support on stands.
   For additional information, refer to Section 100-02 Jacking and Lifting.
2. Remove wheel speed sensor.
   - Disconnect harness connector.
   - Remove bolt.
3. Clean components and mating surfaces.

Installation

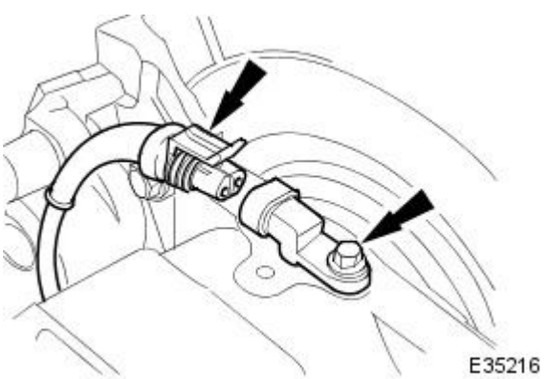

1. Install wheel speed sensor.
   - Position sensor.
   - Install and tighten bolt to 8-10 Nm.
   - Connect harness connector.
2. Remove stands and lower vehicle.

Anti-Lock Control - Stability Assist - Steering Wheel Rotation Sensor

Removal and Installation

Removal

1. Remove the steering column multifunction switch.
   For additional information, refer to Section 211-05 Steering Column Switches.
2. Detach the steering wheel rotation sensor wiring harness.

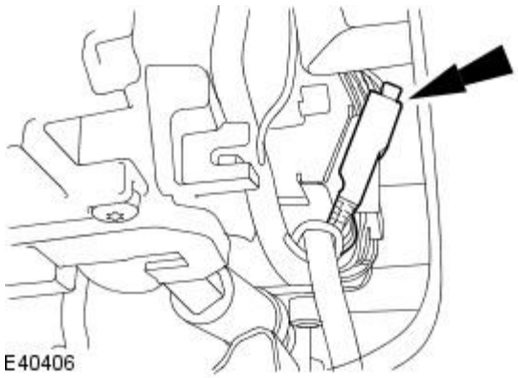

3. Disconnect the steering wheel rotation sensor electrical connector.

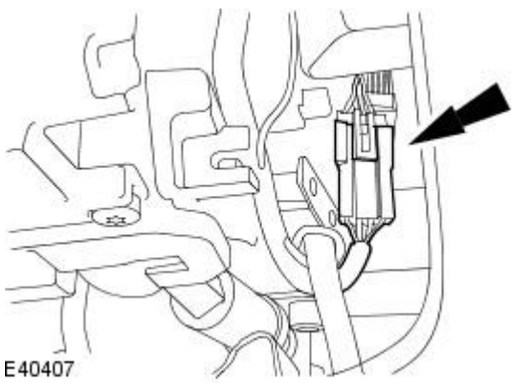

4. Remove the steering wheel rotation sensor.

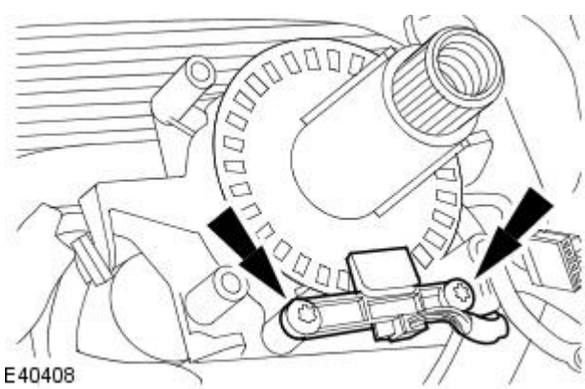

Installation

1. To install, reverse the removal procedure.
   - Tighten to 1 Nm.

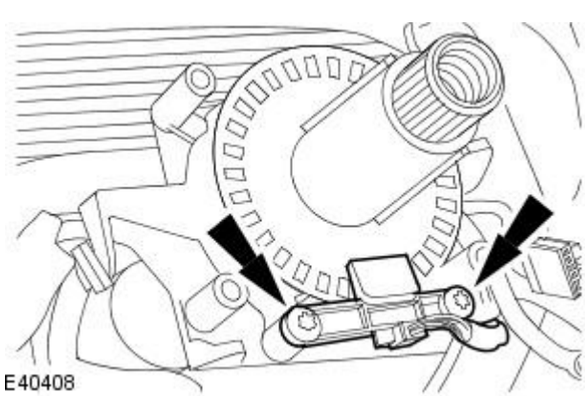

Anti-Lock Control - Stability Assist - Yaw Rate Sensor and Accelerometer

Removal and Installation

Removal

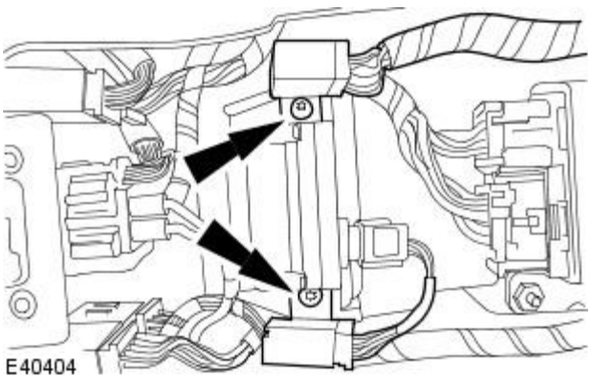

1. Remove the floor console.
   For additional information, refer to Section 501-12 Instrument Panel and Console.
2. Detach the floor console wiring harness retaining brackets.

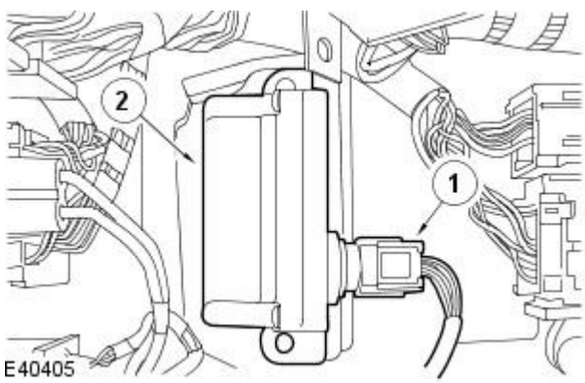

3. Remove the yaw rate sensor and accelerometer.
   1. Disconnect the yaw rate sensor and accelerometer electrical connector.
   2. Remove the yaw rate sensor and accelerometer.

Installation

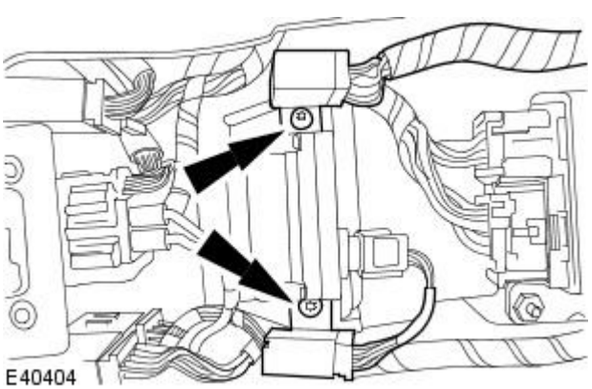

1. To install, reverse the removal procedure.
   - Tighten to 7 Nm.

Published: 20-Jul-2011

Steering System - General Information -

Steering Linkage Specifications

Steering Linkage Free Play	Measurement (mm)	Measurement (in)
Free play (measured at the steering wheel rim)	0-6	0-0.24

Power Steering Pump Specifications

Item	Specification
Power steering pump relief pressure	106-114 bar

Lubricants, Fluids, Sealers and Adhesives

Item	Specification
Power steering fluid	Dexron 3

Published: 11-May-2011

Steering System - General Information - Steering System

Description and Operation

The power steering system is a rack and pinion design, with an engine-driven pump providing the steering assistance. The system features variable steering assistance with vehicle speed and a variable ratio steering rack.

Absolute cleanliness must be observed when replenishing the fluid or dismantling any part of the system. New fluid from a sealed container must be used.

• NOTE: If the steering gear, pump or cooler are being replaced for leakage or noise related issues and there is no evidence of fluid contamination, there is no need to replace the reservoir.

In some cases where the fluid clearly contains particulate matter, and the system continues to function, flush the system with fresh fluid and replace the reservoir, as there is the possibility that the reservoir internal filter may be damaged or faulty.

Published: 11-May-2011

Steering System - General Information - Steering System

Diagnosis and Testing

Inspection and Verification

1. **1.** Verify the customer concern by driving the vehicle.
2. **2.** Visually inspect for obvious signs of mechanical or electrical damage.

Mechanical Inspection Chart

Mechanical Checks
• Incorrect tire pressure, loose wheel nuts, incorrect wheel alignment • Loose tie-rods • Loose damper and spring assemblies or ball joint • Loose steering column shaft universal joints • Loose pinch bolts on steering column shaft • Loose steering gear assembly • Check for external damage to the steering gear. - Damaged tie-rods - CAUTION: If a steering gear assembly is returned under warranty with leaking seals, but there is also damage to the steering gear boot/boots the steering gear warranty will be invalid. This is due to the steering gear seals being damaged due to foreign materials entering the steering gear boot and damaging the steering gear seals thereafter. Damaged steering gear boot • Damaged accessory drive belt • Binding or misaligned steering column, pump or steering gear • Incorrect fluid level • Hose leaks or line restrictions • Hose fouling bodywork

Electrical Inspection Chart

Electrical Checks / Tests
• Make sure all connectors are in place (steering gear Servotronic solenoid and steering control module (SCM) - if applicable) • Make sure all the fuses are in place and not blown • DISCONNECT the steering gear transducer and the steering should become heavy • TEST electrical values: - Power Supply to the SCM = 12 Volts - Steering gear transducer resistance 7.0 to 7.5 Ohms is normal (limits: less than 5 Ohms and greater than 9 Ohms would be declared unacceptable) - Steering gear transducer voltage = 6 Volts - Steering gear transducer current = 840 mA at 0 mph reducing to 0 mA at maximum speed • RECONNECT all electrical items disturbed during testing

3. **3.** If an obvious cause for an observed or reported concern is found, correct the cause (if possible) before proceeding to the next step.
4. **4.** Check the power steering fluid condition. For additional information, REFER to Power Steering Fluid Condition Check in this section.
5. **5.** If the concern is not visually evident, verify the symptom and REFER to Steering Fault Diagnosis by Symptom Charts in this section.

Steering Relay Harness Connector

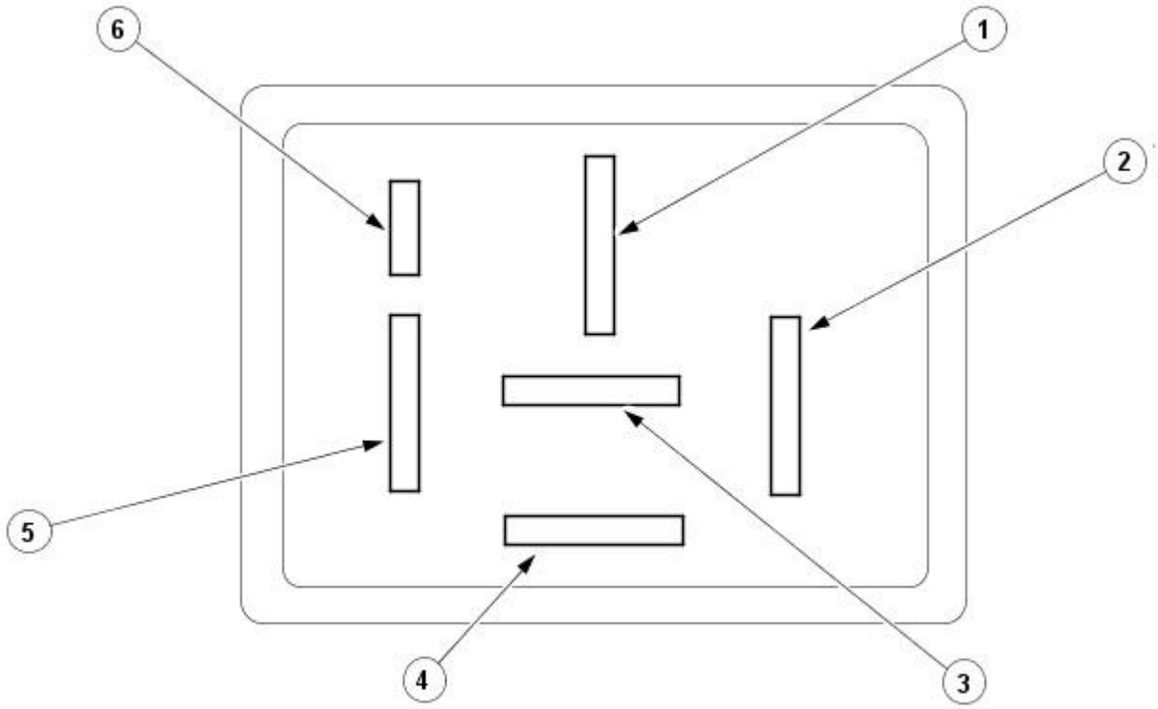

E39815

Item	Description
1	Steering transducer ground
2	Ignition feed
3	Steering transducer feed
4	Ground
5	Speed sensor signal
6	Serial interface

Steering Linkage Inspection and Backlash (Freeplay) Check

CAUTION: Steering gear boots must be handled carefully to avoid damage. Use new clamps when installing steering gear boots.

Inspect the boots for cuts, deterioration, twisting or distortion. Check the steering gear boots to make sure they are tight. Install new boots or clamps as necessary.

• NOTE: The following steps must be carried out with assistance.

1. **1.** With the wheels in the straight ahead position, gently turn the steering wheel to the left and the right to check for free play.
2. **2.** Free play should be between 0 and 6 mm (0 and 0.24 in) at the steering wheel rim. If the free play exceeds this limit, either the ball joints are worn, the lower steering column joints are worn or the backlash of the steering gear is excessive.

CAUTION: DO NOT attempt to adjust the steering gear yoke. Failure to follow this instruction will result in the steering gear warranty to become invalid.

3. **3.** The backlash of the steering gear cannot be adjusted, install a new steering gear. For additional information, REFER to Section 211-02 Power Steering.
4. **4.** Grasp the steering wheel firmly and move it up and down and to the left and right without turning the wheel to check for column bearing wear, steering wheel or steering column. For additional information, REFER to Section 211-04 Steering Column.

Power Steering Fluid Condition Check

1. **1.** Run the engine for 2 minutes.
2. **2.** Check the power steering fluid system level.
3. **3.** Observe the color and the odor. The color under normal circumstances should be dark reddish, not brown or black.
4. **4.** Allow the fluid to drip onto a facial tissue and examine the stain.
5. **5.** If evidence of solid material is found, the power steering fluid system should be drained for further inspection.
6. **6.** If fluid contamination or steering component failure is confirmed by the sediment in the power steering fluid system, REFER to Steering Fault Diagnosis by Symptom Charts in this section.

Power Steering Pressure Test

Test Equipment

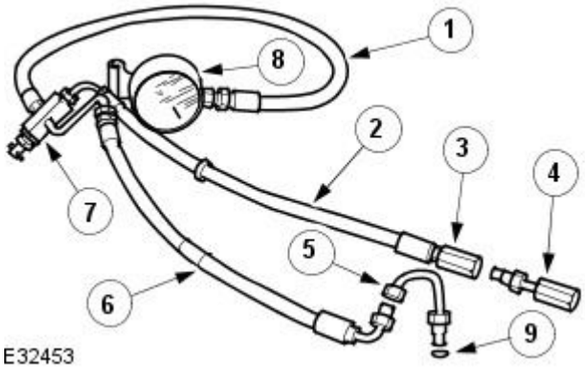

Item	Special Tool Number	Description
1	211-011	Pressure Gauge Hose
2	211-011-08	Pump Return Hose
3	211-011-07	Pump Return Hose Connector
4	211-011-03/2	Test Equipment to High Pressure Hose Adaptor
5	211-011-03/1	Pump High Pressure Outlet to Hose Adaptor
6	211-011-02	Pump Adaptor to Control Valve Hose
7	211-011-01	Control Valve
8	211-011	Pressure Gauge
9	-	'O' Ring Seal

The measurement of the maximum system pressure, (which is governed by the pressure relief valve) is achieved by inserting the Service Tool (pressure gauge and adaptors) into the fluid circuit of the power steering system. Run the engine at idle speed, turn the steering from lock to lock and read the maximum pressure recorded on the gauge.

Installing Test Equipment

To install the pressure test equipment:

- Place a suitable drain tray below the power steering pump.
- Install a hose clamp on the reservoir to pump hose prior to disconnecting any hoses, to avoid unnecessary loss of fluid.
- Disconnect the hose from the power steering pump high pressure outlet.
- Install the pump outlet to hose adaptor (5). Do not omit the 'O' ring seal (9).
- Connect the power steering pump adaptor to control valve hose (6) of the test equipment.
- Install the adaptor (4) in the high pressure hose previously removed from the power steering pump outlet.
- Connect the connector (3) of the test equipment hose (2) to the adaptor (4).
- Remove the hose clamp from the reservoir hose.
- Start the engine.

With the control valve (7) OPEN and the engine idling, the following system pressures may be checked:

- During turning.
- When the steering is held on full lock.
- With the steering at rest.

• CAUTIONS:

To avoid excessive heating of the power steering pump, do not close the valve for longer than 5 seconds maximum.

Do not drive the vehicle with the test equipment installed.

With the control valve (7) CLOSED the power steering pump maximum output pressure can be checked.

Removing Test Equipment

To remove the test equipment:

- Install a hose clamp on the reservoir to power steering pump hose.
- Removing the test equipment is a reversal of the installation instructions.
- Install a new 'O' ring seal (9) to the power steering pump high pressure outlet to hose connection.
- Install the original hose to the power steering pump.
- Remove the clamp from the reservoir to the power steering pump hose.
- Top-up the reservoir fluid.
- Bleed the power steering system. For additional information, REFER to Power Steering System Bleeding - in this section.

Steering Fault Diagnosis by Symptom Charts

Leakage

Condition	Possible Sources	Action
• Fluid leakage	Confirm the position of the fluid leak.	• CLEAN the area of the leak. • Inspect the area and confirm the exact position of leak. • Make sure the fluid is not from another system on the vehicle.
	• Overfilled system.	• CORRECT the fluid level as necessary.
	• Component leak.	• NOTE: Record the position of the leak and some indication of the rate of the leak on the Warranty Return Record Sheet. • LOCATE the suspect component or CHECK hose connections and repair as necessary.

Condition	Possible Sources	Action
	• Damaged fluid cap.	• INSTALL a new fluid cap.
	• Loose or damaged hose fittings.	• TIGHTEN or INSTALL a new hose as necessary.
	• Leakage at power steering pump.	• INSTALL a new power steering pump as necessary. For additional information, REFER to Section 211-02 Power Steering.
• Fluid leakage	• Leakage at steering hose to steering gear connection.	• CHECK steering hose to steering gear connection for leakage. CHECK and TIGHTEN the steering hose to steering gear connection retaining bolts/bolts as necessary.
	• Power steering fluid leakage at O-ring seals.	• CHECK the power steering system for signs of steering fluid loss from O-ring seals. • INSTALL new O-ring seals as necessary. • BLEED the power steering system. For additional information, REFER to Section 211-00 Steering System - General Information.
	• Power steering fluid leakage from transfer pipes.	• CHECK the power steering system for signs of steering fluid loss from the transfer pipes. • CHECK and TIGHTEN the transfer pipes if required, INSTALL new transfer pipes as necessary. • BLEED the power steering system. For additional information, REFER to Section 211-00 Steering System - General Information.
	• Power steering fluid leakage from the steering gear.	• CHECK the power steering gear for signs of fluid loss. • INSTALL a new steering gear as necessary. For additional information, REFER to Section 211-02 Power Steering.
	• Power steering fluid leakage from steering gear boot.	• CHECK the power steering gear for signs of fluid loss. • INSTALL a new steering gear as necessary. For additional information, REFER to Section 211-02 Power Steering.

Functional

Condition	Possible Sources	Action
• Free play at steering wheel	• Excess play in the steering linkage.	• CHECK the steering linkage for excess play. For additional information, REFER to the Steering Linkage Inspection and Backlash (Freeplay) Check in this section.
	• Steering wheel loose.	• CHECK and TIGHTEN the steering wheel retaining bolt/bolts as necessary. For additional information, REFER to Section 211-04 Steering Column.
	• Lower steering column pinch bolt loose.	• CHECK and TIGHTEN the lower steering column pinch bolts as necessary. For additional information, REFER to Section 211-04 Steering Column.
	• Excessive wear in lower steering column.	• CHECK for lower steering column for wear in the universal joints. If wear is present, INSTALL a new lower steering column as necessary.
	• Wear in suspension joints.	CAUTION: DO NOT attempt to adjust the steering gear yoke. Failure to follow this instruction will result in the steering gear warranty to become invalid. • CHECK for excess wear in the front suspension joints. For additional information, REFER to Section 204-00 Suspension System - General Information.
• Vehicle wanders from side to side on the road, when the vehicle is driven straight ahead and the steering wheel is held in a firm position	• Incorrect tire pressure or tire size.	• CHECK and ADJUST the tire pressure. For additional information, REFER to Section 204-04 Wheels and Tires. • INSTALL a new tire as necessary. For additional information, REFER to Section 204-04 Wheels and Tires.
	• Vehicle is unevenly or excessively loaded.	• ADJUST the load evenly.
	• Loose/worn tie-rods.	• INSTALL a new tie-rod end. For additional information, REFER to Section 211-03 Steering Linkage.
	• Steering gear bolts loose or damaged.	• TIGHTEN or INSTALL new bolts.
	• Loose or worn suspension ball joint(s).	• INSTALL a new suspension ball joint assembly. For additional information, REFER to Section 204-01 Front Suspension.
	• Steering column universal joint pinch bolt loose.	• TIGHTEN the steering column universal joint pinch bolt. For additional information, REFER to Section 211-04 Steering Column.
	• Incorrect toe adjustment.	• ADJUST as necessary. For additional information, REFER to Section 204-00 Suspension System - General Information.

Condition	Possible Sources	Action
	• Loose or worn rear suspension.	• TIGHTEN loose, or INSTALL new rear suspension components. For additional information, REFER to Section 204-02 Rear Suspension.
• Vehicle tends to pull to one side when driven on a level surface	• Incorrect tire pressure. • Incorrect tire size or different tire/tread type. • Uneven tire wear	• CHECK and ADJUST the tire pressure. For additional information, REFER to Section 204-04 Wheels and Tires. • INSTALL a new tire as necessary. For additional information, REFER to Section 204-04 Wheels and Tires.
	• Vehicle is unevenly loaded or overloaded.	• Adjust the load.
	• Incorrect toe adjustment.	• ADJUST as necessary. For additional information, REFER to Section 204-00 Suspension System - General Information.
	• Damaged front suspension components.	• INSTALL new front suspension components as necessary. For additional information, REFER to Section 204-01 Front Suspension.
	• Damaged rear suspension components.	• INSTALL new rear suspension components as necessary. For additional information, REFER to Section 204-02 Rear Suspension.
	• Steering gear valve effort out of balance.	• SHIFT the transmission into NEUTRAL while driving at no more than 30 miles/hour (50 km/h) and turn the ignition to position I (engine OFF-coasting). If the vehicle does not pull with the engine off, INSTALL a new steering gear. For additional information, REFER to Section 211-02 Power Steering. • If the vehicle does drift with the engine off, CROSS SWITCH front wheel assemblies. • If the vehicle pulls to the opposite side, SWITCH wheels that were on the rear to the same side on the front. • If the vehicle pull direction is not changed, CHECK the front suspension components and toe adjustments. For additional information, REFER to Section 204-01 Front Suspension.
	• Check the front and rear brakes for correct operation.	• ADJUST as necessary. For additional information, REFER to Section 206-00 Brake System - General Information.
	• Check for bent rear suspension components and for damaged coil springs in the front suspension.	• INSTALL new rear suspension components as necessary. For additional information, REFER to Section 204-02 Rear Suspension. • INSTALL new front suspension components as necessary. For additional information, REFER to Section 204-01 Front Suspension.
	• Check the rear suspension for loose or worn suspension components.	• TIGHTEN or INSTALL new components as necessary. For additional information, REFER to Section 204-02 Rear Suspension.
	• Incorrect underbody alignment.	• CHECK underbody alignment. For additional information, REFER to Section 502-00 Uni-Body, Subframe and Mounting System.
• Poor returnability of the steering	• Lower steering column interference.	• CHECK the steering column is free from interference from the engine harness, sound proofing or the floor covering.
	• Incorrect tire pressure.	• CHECK and ADJUST the tire pressure. For additional information, REFER to Section 204-04 Wheels and Tires.
	• Incorrect tire size or type.	• INSTALL a new tire as necessary. For additional information, REFER to Section 204-04 Wheels and Tires.
	• Steering column upper shroud fouling on the steering wheel.	• CHECK steering column upper shroud for fouling. ADJUST as necessary.
	• Steering column universal joints binding.	• INSTALL a new steering column. For additional information, REFER to Section 211-04 Steering Column.
	• Steering column shaft floor seal binding.	• CHECK the steering column shaft floor seal for correct fitment and REFIT as necessary.
	• Steering column shaft floor seal may be torn.	• INSTALL a new steering column shaft floor seal as necessary.
	• Binding or damaged tie-rods.	• CHECK tie-rod end for excessive wear or tightness in ball joint. INSTALL a new tie-rod end. For additional information, REFER to Section 211-03 Steering Linkage.

Condition	Possible Sources	Action
	• Damaged or worn front suspension components.	• INSTALL new front suspension components as necessary. For additional information, REFER to Section 204-01 Front Suspension.
	• Incorrect toe adjustment.	• ADJUST as necessary. For additional information, REFER to Section 204-00 Suspension System - General Information.
• Excessive steering efforts required during low speed manoeuvring and/or during parking manoeuvres	• Low power steering fluid.	• CHECK steering system for signs of steering fluid loss. • BLEED the power steering system. For additional information, REFER to Section 211-00 Steering System - General Information.
	• Damaged accessory drive belt tensioner.	• INSTALL a new accessory drive belt tensioner.
	• Hose or cooler line restriction.	• CHECK hose or cooler lines for correct routing. • INSTALL a new hose as necessary.
	• Fluid aeration.	• BLEED the system. For additional information, REFER to Power Steering System Bleeding in this section.
	• Steering transducer not closed - no feed voltage.	• CHECK the steering transducer circuit. For additional information, REFER to the wiring diagrams. • Carry out the electrical checks and tests. For additional information, REFER to the Electrical Checks and Tests in this section.
	• Steering transducer not closed - cable fault.	• CHECK the steering transducer circuit. For additional information, REFER to the wiring diagrams. • Carry out the electrical checks and tests. For additional information, REFER to the Electrical Checks and Tests in this section.
	• Steering control module (SCM) defective.	• CHECK the SCM and INSTALL a new SCM as necessary.
	• Power steering fluid delivery pressure or flow too low.	• CHECK the power steering pressure. For additional information, REFER to the Power Steering Pressure Test in this section. • INSTALL a new power steering pump as necessary. For additional information, REFER to Section 211-02 Power Steering.
	• Internal steering gear leakage.	• CHECK the power steering pressure. For additional information, REFER to the Power Steering Pressure Test in this section. • INSTALL a new steering gear as necessary. For additional information, REFER to Section 211-02 Power Steering.
• Steering operation is very heavy when driving, but when stationary manoeuvring is good	• Steering transducer open early.	• CHECK steering transducer and INSTALL a new steering transducer as necessary. • Carry out the electrical checks and tests. For additional information, REFER to the Electrical Checks and Tests in this section.
	• Steering transducer open early, steering control module (SCM) fault.	• CHECK SCM and INSTALL a new SCM as necessary.
	• Steering transducer open early, speedo signal error.	• CHECK speedo circuit. For additional information, REFER to the wiring diagrams.
• Steering operation is very light when driving, but when stationary manoeuvring is good	• Steering transducer not open, (no power steering fluid flow).	• CHECK the power steering fluid condition. For additional information, REFER to the Power Steering Fluid condition check in this section.
	• Steering transducer not open, steering control module (SCM) fault.	• CHECK the SCM and INSTALL a new SCM as necessary. • Carry out the electrical checks and tests. For additional information, REFER to the Electrical Checks and Tests in this section.
	• Steering transducer not open, speedo signal error.	• CHECK the speedo circuit. For additional information, REFER to the wiring diagrams.
	• CHECK the power steering fluid low pressure pipe for restricted flow.	• INSTALL a new power steering fluid low pressure pipe.
• Steering heavy operation during rapid manoeuvring	• Air in power steering system.	• CHECK for an air leak into the power steering system and repair as necessary. • BLEED the power steering system. For additional information, REFER to Power Steering System Bleeding - in this section.

Condition	Possible Sources	Action
	• Fluid loss at the power steering pump shaft seal.	• CHECK the power steering pump for signs of steering fluid loss. • INSTALL a new power steering pump as necessary. For additional information, REFER to Section 211-02 Power Steering.
	• Power steering fluid delivery pressure or flow too low.	• CHECK the power steering pump for signs of steering fluid loss. • CHECK the power steering pressure. For additional information, REFER to the Power Steering Pressure Test in this section. • INSTALL a new power steering pump as necessary. For additional information, REFER to Section 211-02 Power Steering.
• Steering heavy operation in one direction	• Lower steering column interference.	• CHECK the steering column is free from interference from the engine harness, sound proofing or the floor covering.
	• Incorrect steering geometry.	• CHECK the front wheel alignment. For additional information, REFER to Section 204-00 Suspension System - General Information.
	• Faulty rotary valve/seal.	• CHECK the power steering pressure. For additional information, REFER to the Power Steering Pressure Test in this section. • INSTALL a new steering gear as necessary. For additional information, REFER to Section 211-02 Power Steering.
	• Tire fouling on the wheel arch liner.	• CHECK for clearance between the tire and the wheel arch liner. • Remove and refit the wheel arch liner or INSTALL a new wheel arch liner as necessary.
• Steering heavy operation in both directions	• Low power steering fluid.	• CHECK steering system for signs of steering fluid loss. • BLEED the power steering system. For additional information, REFER to Section 211-00 Steering System - General Information.
	• Air in power steering system.	• CHECK the power steering pump for signs of steering fluid loss. • INSTALL a new power steering pump as necessary. For additional information, REFER to Section 211-02 Power Steering.
	• Fluid loss at the power steering pump shaft seal.	• CHECK the power steering pump for signs of steering fluid loss. • INSTALL a new power steering pump as necessary. For additional information, REFER to Section 211-02 Power Steering.
	• Power steering fluid delivery pressure or flow too low.	• CHECK the power steering pump for signs of steering fluid loss. • CHECK the power steering pressure. For additional information, REFER to the Power Steering Pressure Test in this section. • INSTALL a new power steering pump as necessary. For additional information, REFER to Section 211-02 Power Steering.
• Steering operation varies from heavy to light when driving at constant speed	• Lower steering column interference.	• CHECK the steering column is free from interference from the engine harness, sound proofing or the floor covering.
	• Incorrect speedometer signal.	• CHECK the speedo circuit. For additional information, refer to the wiring diagrams.
	• Steering transducer cable/connection faulty or grounded.	• CHECK the steering transducer circuit. For additional information, refer to the wiring diagrams. • Carry out the electrical checks and tests. For additional information, REFER to the Electrical Checks and Tests in this section.
• Steering wheel varies from light to heavy two times per revolution	• Lower steering column interference.	• CHECK the steering column is free from interference from the engine harness, sound proofing or the floor covering.
	• Steering column universal joints binding.	• INSTALL a new steering column. For additional information, REFER to Section 211-04 Steering Column.
	• Seized or damaged steering components.	• CHECK for wear or failure of suspension bushes and ball joints. For additional information, REFER to Section 204-00 Suspension System - General Information.

Noise

Condition	Possible Sources	Action
• Accessory drive belt squeal	• Incorrect accessory drive belt tension or accessory drive belt glazed.	• CHECK accessory drive belt condition and INSTALL a new accessory drive belt as necessary. For additional information, REFER to Section 303-05 Accessory Drive.
• Chirp noise in the steering pump	• Loose or worn accessory drive belt.	• CHECK accessory drive belt condition and INSTALL a new accessory drive belt as necessary. For additional information, REFER to Section 303-05 Accessory Drive.
• Power steering pump noisy	• Low power steering fluid.	• CHECK steering system for signs of steering fluid loss. • BLEED the power steering system. For additional information, REFER to Section 211-00 Steering System - General Information.
	• Power steering pump worn or otherwise defective.	• CHECK for leaks. REPAIR as necessary. • CHECK the power steering pressure. For additional information, REFER to the Power Steering Pressure Test in this section. • INSTALL a new power steering pump as necessary. For additional information, REFER to Section 211-02 Power Steering.
• Whine type noise	• Aerated fluid.	• BLEED the power steering system. For additional information, REFER to Power Steering System Bleeding - in this section.
	• Power steering pump.	• CHECK for leaks. REPAIR as necessary. • INSTALL a new power steering pump as necessary. For additional information, REFER to Section 211-02 Power Steering.
• Noise during steering gear movement	• Low power steering fluid.	• CHECK steering system for signs of steering fluid loss. • BLEED the power steering system. For additional information, REFER to Section 211-00 Steering System - General Information.
	• Water contamination to the power steering fluid.	• DRAIN the power steering system. • BLEED the power steering system. For additional information, REFER to Section 211-00 Steering System - General Information.
	• Cavitation due to restricted power steering feed hose.	• CHECK and reposition power steering feed hoses and INSTALL new hoses as necessary.
• Continuous noise	• Low power steering fluid.	• CHECK steering system for signs of steering fluid loss. • BLEED the power steering system. For additional information, REFER to Section 211-00 Steering System - General Information.
	• Power steering pump drive loose.	• CHECK power steering coupling and power steering pump. • INSTALL a new power steering coupling or power steering pump as necessary. For additional information, REFER to Section 211-02 Power Steering.
	• Incorrect accessory drive belt tension or accessory drive belt glazed.	• CHECK accessory drive belt condition and INSTALL a new accessory drive belt as necessary. For additional information, REFER to Section 303-05 Accessory Drive.
	• Power steering pump drive pulley loose.	• CHECK and TIGHTEN the power steering pump drive pulley retaining bolts as necessary. For additional information, REFER to Section 303-03A Engine Cooling / 303-03B Supercharger Cooling.
	• Power steering pump retaining bolts loose.	• CHECK the power steering pump retaining bolts and TIGHTEN as necessary.
	• Power steering hose/pipe in contact with the vehicles body.	• CHECK and reposition power steering hoses/pipes, INSTALL new hoses/pipes as necessary.
	• Power steering hose restricted/twisted.	• CHECK and reposition power steering hose, replace hose as necessary.

Vibration

Condition	Possible Sources	Action
• Feedback (knocking noises in the steering gear) - condition where roughness is felt in the steering wheel by the driver when the vehicle is driven over rough surfaces	• Loose/worn tie-rods.	• INSTALL a new tie-rod end. For additional information, REFER to Section 211-03 Steering Linkage.
	• Steering gear retaining bolts loose or damaged.	CAUTION: DO NOT attempt to adjust the steering gear yoke. Failure to follow this instruction will result in the steering gear warranty to become invalid. • CHECK and TIGHTEN the steering gear retaining bolts. • INSTALL new retaining bolts as necessary. For additional information, REFER to Section 211-02 Power Steering.
	• Loose suspension bushing, bolts or ball joints.	• TIGHTEN or INSTALL new components as necessary. For additional information, REFER to Section 204-01 Front Suspension.
	• Steering column retaining bolts loose.	CAUTION: DO NOT attempt to adjust the steering gear yoke. Failure to follow this instruction will result in the steering gear warranty to become invalid.

Condition	Possible Sources	Action
		• CHECK and TIGHTEN the steering column retaining bolts/nuts and pinch bolts if required. For additional information, REFER to Section 211-04 Steering Column.
	• Excessive wear in steering column assembly.	• CHECK for steering column for wear in the universal joints and bearings. If wear is present, INSTALL a new steering column as necessary. For additional information, REFER to Section 211-04 Steering Column.
• Nibble (Shimmy) Oscillation of the steering wheel (not vertical which is SHAKE). This is driven by road wheel imbalance.	• Road wheel imbalance.	• CHECK for road wheel imbalance. • CHECK for relevant SERVICE BULLETINS/SERVICE ACTIONS for the vehicle on Jaguar Communications Online (JCOL) or in hard copy form.
	• Steering wheel replacement.	• CHECK for relevant SERVICE BULLETINS/SERVICE ACTIONS for the vehicle on Jaguar Communications Online (JCOL) or in hard copy form.
	• Rack replacement.	• CHECK for relevant SERVICE BULLETINS/SERVICE ACTIONS for the vehicle on Jaguar Communications Online (JCOL) or in hard copy form.

Description of General Steering System Noises

Boom

Rhythmic sound like a drum roll or distant thunder. May cause pressure on the ear drum.

Buzz

Low-pitched sound, like a bee. Usually associated with vibrations.

Chatter

Rapidly repeating metallic sound.

Chuckle

Rapid noise that sounds like a stick against the spokes of a spinning bicycle wheel.

Chirp

High pitched rapidly repeating sound, like chirping birds.

Click

Light sound, like a ball point pen being clicked.

Click / Thump

Heavy metal-to-metal sound, like a hammer striking steel.

Grind

Abrasive sound, like a grinding wheel or sandpaper rubbing against wood.

Groan / Moan

Continuous, low-pitched humming sound.

Groan / Howl

Low, guttural sound, like an angry dog.

Hiss

Continuous sound like air escaping from a tire valve.

Hum

Continuous sound of varying frequencies, like a wire humming in the wind.

Knock

Heavy, loud repeating sound like a knock on a door.

Ping

Similar to knock, except at higher frequency.

Rattle

A sound suggesting looseness, such as marbles rolling around in a can.

Roar

Deep, long, prolonged sound like an animal, or winds and ocean waves.

Rumble

Low, heavy continuous sound like that made by wagons or thunder.

Scrape

Grating noise like one hard plastic rubbing part rubbing against another.

Squeak

High-pitched sound like rubbing a clean window.

Squeal

Continuous, high-pitched sound like running finger nails across a chalkboard.

Tap

Light, hammering sound like tapping pencil on edge of table. May be rhythmic or intermittent.

Weep

Continuous mid-range sound (lower frequency than squeal, higher frequency than groan).

Whir/Whine

High-pitched buzzing sound, like an electric motor or drill.

Whistle

Sharp, shrill sound, like wind passing a small opening.

Description of Specific Steering System Noise Types

Belt Squeal

Belt squeal is a high frequency air-borne noise generated by slippage of the ribbed Vee belt on the power steering pump pulley. Squeal increases with system loading and at the end of lock.

Clonk

Clonk is a structure-borne noise heard as a loose-sounding rattle or vibration coming from the steering column. Clonk can be identified by driving and turning over cobblestones, rough roads, or high frequency bumps such as 25-50 mm tall tar strips. Clonk requires a tie-rod load impact.

Column Knock

Column knock is a loose-sounding rattle or vibration generated by the steering column shaft contacting other portions of the column assembly. The noise is both audible and tactile. Column knock is generated by driving over cobblestones or rough pavement. It is not necessary to turn the steering wheel to create this noise.

Column Rattle

Column rattle is a metallic sounding noise created when applying a highly impulsive force to the steering wheel. Column rattle is often used to combine the more general group of column noises including clonk and column knock. Column rattle noises can be caused by clonk, knock, loose column components, bonus parts etc. A series of parked, straight-line driving, and cornering test should be carried out to isolate the source/sources.

Grinding/Scrape

Grinding is a low frequency noise in the column when the steering wheel is turned. Is generally caused by interference between moving components such as the steering wheel to steering column shroud.

Grunt (Squawk)

Grunt is a "honking" sound elicited when coming off one of the steering stops. Grunt is generally excited during parking manoeuvres with a low to medium speed steering input.

Hiss (Swish)

Hiss or Valve Hiss is a high-frequency sound coming from the steering gear when the system is loaded. It is a rushing or "swish" noise that doesn't change frequency with RPM. Hiss is the general noise generated by the flow of hydraulic fluid through restrictions in the steering system. Restrictions include the rotary steering valve, power steering tubes, connectors, tuning orifices, etc. Hiss can be air-borne and structure-borne, but the structure-borne path through the steering intermediate shaft is usually dominant.

Moan (Groan)

Moan is the general structure-borne noise of the steering system. Moan is primarily transmitted to the driver via the body structure through the pump mount, engine mounts, power steering lines and power steering brackets. On some vehicles, moan is a load humming noise, often present when the wheel is turned and the system is loaded. It may change frequency with engine RPM and if the system is loaded or unloaded.

Rack Knock (Rack Slap)

⚠CAUTION: DO NOT attempt to adjust the steering gear yoke. Failure to follow this instruction will result in the steering gear warranty to become invalid.

Rack Knock is a rattle sound and steering wheel vibration caused by separation of the steering gear and pinion while driving over bumps. It

is a structure-borne noise transmitted through the intermediate shaft and column. Rack knock can also be heard as a "thump" or impact noise that occurs with the vehicle stationary when the steering wheel is released from a loaded position and allowed to return to rest. Noise occurs with the engine on or off.

Rattles

Rattles are noises caused by knocking or hitting with components in the steering system. Steering rattles can occur in the engine compartment, the suspension, or the passenger compartment . Rattles can be caused by loose parts, movable and flexible parts, and improper clearances.

Squeaks/Scrapes

Squeaks/Scrapes are noises due to friction or component rubbing anywhere in the steering system. Squeaks/Scrapes have appeared in steering linkages and joints, in column components and in column and steering wheel trim parts.

Weep

Weep is an air-borne noise, occasionally generated when turning the steering across lock at a constant rate. When present on a vehicle the noise, once initiated can often be maintained across a large proportion of the available steering movement.

Whistle

Whistle is similar to hiss but is louder and of a higher frequency. It is also more of a pure tone noise than hiss. Whistle is air-borne and is generated by a high flow rate of hydraulic fluid through a small restriction.

Zip

Zip noise is the air-borne noise generated by power steering pump cavitation when power steering fluid does not flow freely through the suction hose from the reservoir to the pump. Zip primarily occurs during cold weather at start-up.

Steering System Vibrations and Harshness

Buzz

Buzz is a tactile rotary vibration felt in the steering wheel for slow steering inputs. Buzz can also be called a grinding feel and it is closely related to grunt and is caused by high system gain with low damping. Buzz is generally excited during parking manoeuvres with low to medium speed steering input.

Buzz (Electrical)

A different steering buzz can be caused by pulse width modulated (PWM) electric actuators used in variable assist steering systems. This buzz is felt by turning the ignition key to run without starting the engine and holding onto the steering wheel. In extreme cases, the buzz can be felt with the engine running also.

Column/Steering Wheel Shake

Column shake is a low frequency vertical vibration excited by primary engine vibrations.

Nibble (Shimmy)

Steering nibble is a rotary oscillation or vibration of the steering wheel, which can be excited at a specific vehicle speed. Nibble is driven by wheel and tire imbalance exciting a suspension recession mode, which then translates into steering gear travel and finally steering wheel nibble.

Shudder (Judder)

Shudder is a low frequency oscillation of the entire steering system (tire, wheels, steering gear and linkage, etc.) when the vehicle is steered during static-park or at low speeds. Shudder is very dependent on road surface.

Torque Ripple

Torque ripple is a concern with Electric Power Steering (EPS) systems. Torque ripple is most evident at static-park steering the wheel very slowly from lock to lock. Torque ripple is primarily caused by motor commutation.

Torque/Velocity Variation (Phasing/Effort Cycling)

Steering wheel torque variation occurring twice in one revolution is normally as a result of problems with the lower steering column (intermediate shaft), but foul conditions generally result in either constant stiffness or single point stiffness. Depending upon the orientation of the joints, the steering can feel asymmetric (torque falling off in one direction and rising in the other) or else it can simply have pronounced peaks and troughs as the steering moves from lock to lock.

Wheel Fight (Kick Back)

Wheel fight is excess feedback of sudden road forces through the steering system and back to the driver. It is evaluated at all vehicle speeds over cobblestones, rough roads, and potholes. The tires, wheels, and suspension generate forces into the steering systems. Steering friction, hydraulic damping, hydraulic compliance, mechanical compliance, steering ratio, and assist gain all affect how much is transmitted to the driver.

Steering Linkage

CAUTION: Steering gear boots must be handled carefully to avoid damage. Use new clamps when installing steering gear boots.

Inspect the boots for cuts, deterioration, twisting or distortion. Check the steering gear boots to make sure they are tight. Install new boots or clamps as necessary.

• NOTE: The following steps must be carried out with assistance.

1. **1.** With the wheels in the straight ahead position, gently turn the steering wheel to the left and the right to check for free play.
2. **2.** Free play should be between 0 and 6 mm (0 and 0.24 in) at the steering wheel rim. If the free play exceeds this limit, either the

ball joints are worn, the lower steering column joints are worn or the backlash of the steering gear is excessive.

3. CAUTION: DO NOT attempt to adjust the steering gear yoke. Failure to follow this instruction will result in the steering gear warranty to become invalid.

   3. The backlash of the steering gear cannot be adjusted, install a new steering gear. For additional information, REFER to Section 211-02 Power Steering.

4. **4.** Grasp the steering wheel firmly and move it up and down and to the left and right without turning the wheel to check for column bearing wear, steering wheel or steering column. For additional information, REFER to Section 211-04 Steering Column.

Published: 11-May-2011

Steering System - General Information - Power Steering System Bleeding

General Procedures

1. NOTE: When filling the reservoir, make sure that the fluid is clean and not agitated prior to use. The fluid should be poured slowly into the reservoir to minimize the possibility of aeration.

   Fill the reservoir to the MAX mark.

2. NOTE: Do not start the engine.

   Turn the steering from lock to lock.

3. Check the fluid level. Fill the reservoir to the MAX mark if necessary.
4. Start the engine and turn the steering from lock to lock.
5. Switch the engine off.
6. Check the fluid level. Fill the reservoir to the MAX mark if necessary.
7. Start the engine, turn the steering wheel from lock to lock. If excessive noise is apparent or shudder is evident through the steering wheel, repeat the bleed procedure.

Published: 11-May-2011

Steering System - General Information - Power Steering System Flushing

General Procedures

• NOTE: If heavy steering or contamination within the power steering system is found, it is necessary to carry out the system flush procedure as detailed below. If any components have been replaced in the power steering system the procedure below must be carried out in full.

• NOTE: Some variation in the illustrations may occur, but the essential information is always correct.

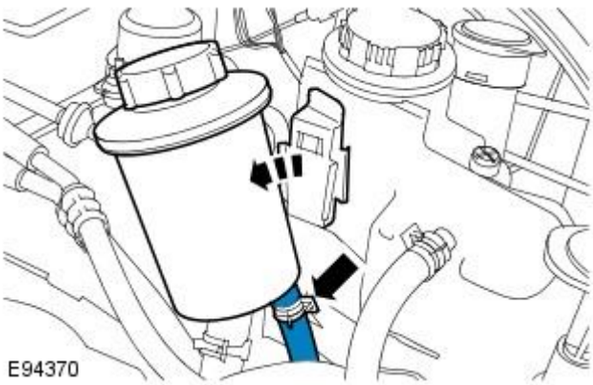

1. Remove the power steering fluid reservoir cap.

2. Using a suitable syringe, remove the power steering fluid from the power steering fluid reservoir.

3. CAUTION: Be prepared to collect escaping fluids.

• NOTE: Note the orientation of the clip.

Detach the power steering fluid reservoir.

- Detach but do not remove the power steering fluid reservoir.
- Release the power steering fluid return hose from the power steering fluid reservoir.
- If a quick release coupling is fitted to the power steering return hose, release the power steering fluid return hose from the coupling by removing the clip.

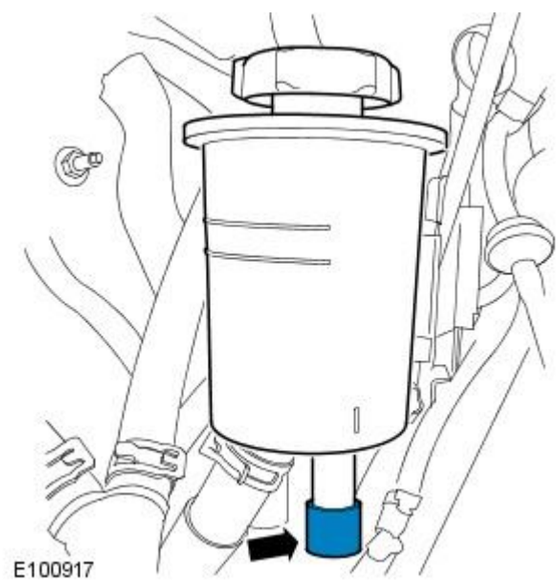

4. CAUTION: Be prepared to collect escaping fluids.

• NOTE: Make sure that all openings are sealed. Use new blanking caps.

Using a suitable blanking cap, cap the power steering reservoir return pipe.

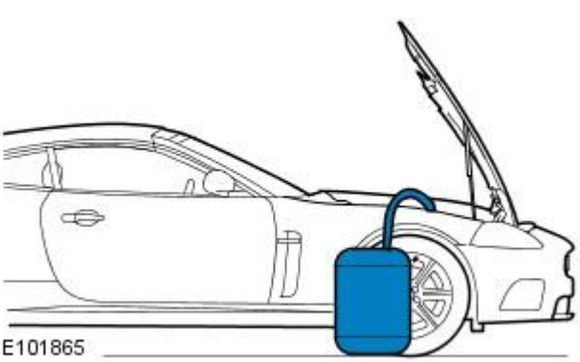

5. CAUTION: Be prepared to collect escaping fluids.

• NOTE: Make sure the extended pipe is not kinked or twisted and is correctly secured with hose clips.

Attach a suitable pipe to the power steering return hose to allow the fluid to drain.

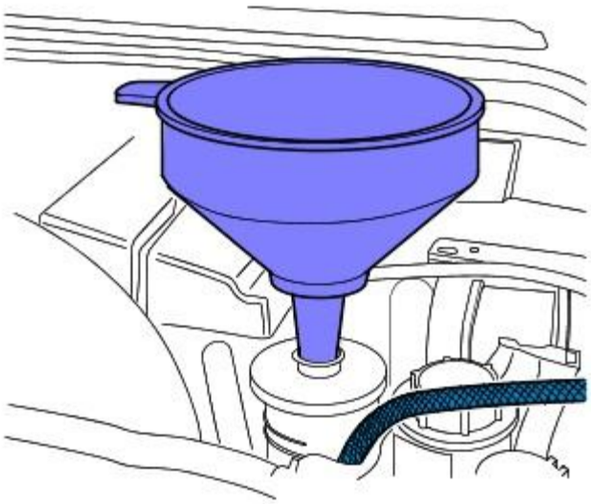

E94372

6. NOTE: The suitable funnel should have the a capacity of 4 litres and O-ring seal

• NOTE: The suitable funnel must be tightly sealed to the power steering fluid reservoir to avoid fluid leakage.

Install a suitable funnel onto the power steering fluid reservoir.

7. WARNING: Do not work on or under a vehicle supported only by a jack. Always support the vehicle on safety stands.

Raise and support the vehicle with the wheels just clear of the ground.

8. CAUTIONS:

Steps 8 and 9 must be carried out within 2 - 3 seconds of each other. Failure to follow this instruction may result in damage to the power steering system.

Be prepared to collect escaping fluids.

Using the suitable funnel, top up the power steering system with the specified fluid. Make sure the fluid level is maintained at two thirds full in the funnel.

9. CAUTIONS:

Be prepared to collect escaping fluids.

Do not allow the power steering fluid level in the power steering fluid reservoir to fall below the minimum power steering fluid level. Failure to follow this instruction may result in damage to the power steering system.

Make sure the engine is switched off as soon as the full 4 litres of power steering fluid has entered the power steering fluid reservoir.

Flush the power steering system.

- Start the engine
- With assistance turn the steering slowly lock to lock 3 times at approximately 1 revolution every 5 seconds.
- Continue to flush the power steering system until 4 litres of power steering fluid has been added to the power steering reservoir. This should take approximately 30 seconds.

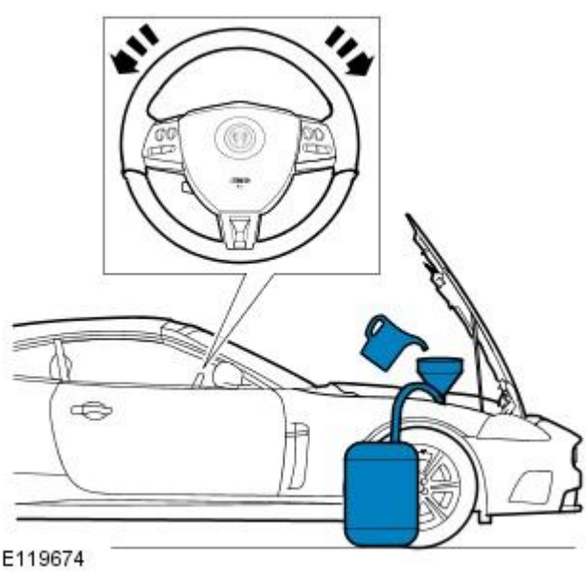

E119674

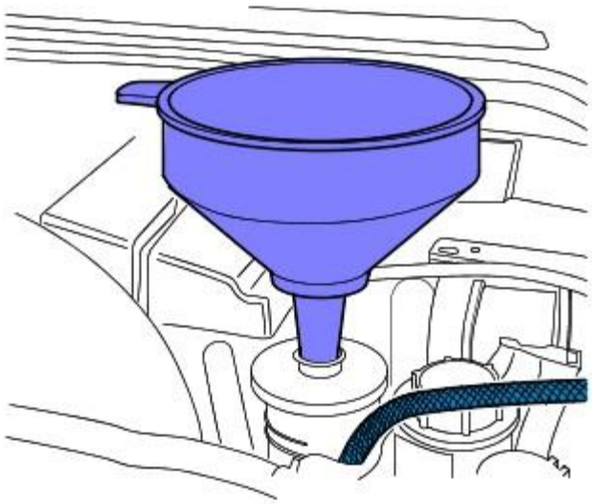

E94372

10. CAUTION: Be prepared to collect escaping fluids.

Remove the suitable funnel.

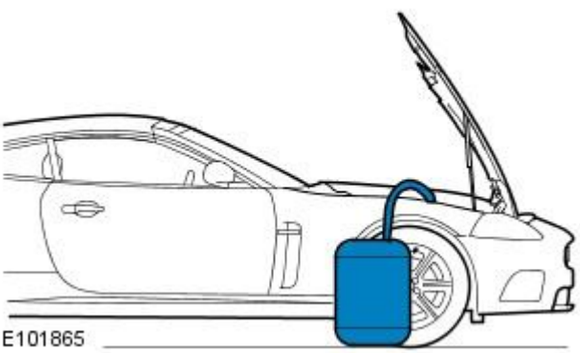

E101865

11. CAUTION: Be prepared to collect escaping fluids.

Remove the suitable pipe to the power steering return hose.

12. CAUTION: Be prepared to collect escaping fluids.

- NOTE: Note the orientation of the clip.

If a quick release coupling is fitted to the power steering return hose, connect the power steering fluid return hose to the coupling by installing the clip.

13. Install a new power steering fluid reservoir. For additional information, refer to: (211-02)

Power Steering Fluid Reservoir - 4.2L/3.0L/2.7L Diesel (Removal and Installation),
Power Steering Fluid Reservoir - 3.0L Diesel (Removal and Installation).

Published: 11-May-2011

Steering System - General Information - Steering Gear Centralizing

General Procedures

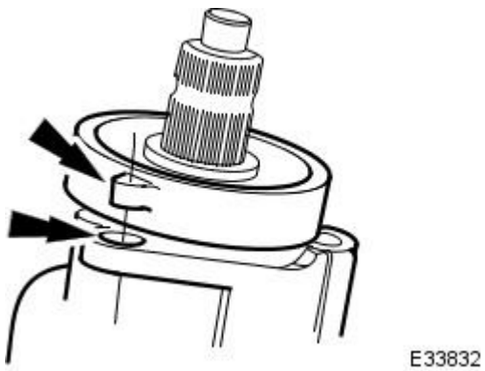

Steering Gear Alignment Markers

1. The steering gear should always be centralized prior to steering column or suspension geometry adjustment.
   - Centralization of the steering gear is achieved by aligning the marker on the centralizing cap with a locator on the pinion housing.

Power Steering -

Lubricants, Fluids, Sealants and Adhesives

Unit	Specification
PAS Fluid	Dexron 3

Capacities

Unit	Liters
PAS System	1.0
PAS Reservoir	0.4

Torques

Component	Nm
Steering Rack Mounting Bracket to Crossbeam	40-50
PAS Pump to Mounting Bracket	22-26
PAS Pump to Cylinder Block	38-48
Hose-High Pressure to PAS Pump	22-28
Steering Rack Pipe Latch Plate Bolt	9-11
Outer Tie Rod End Locknut	71-85
Reservoir to Brake Modulator Bracket	4-5
Reservoir Retention Bracket	4-5
Fluid Cooler to Bumper Beam	2.5-3.5
Transfer Pipe to Steering Rack	7-8
Transfer Pipe to Hydraulic Control Valve	7-8

Published: 11-May-2011

Power Steering - Power Steering

Description and Operation

Component Relationship

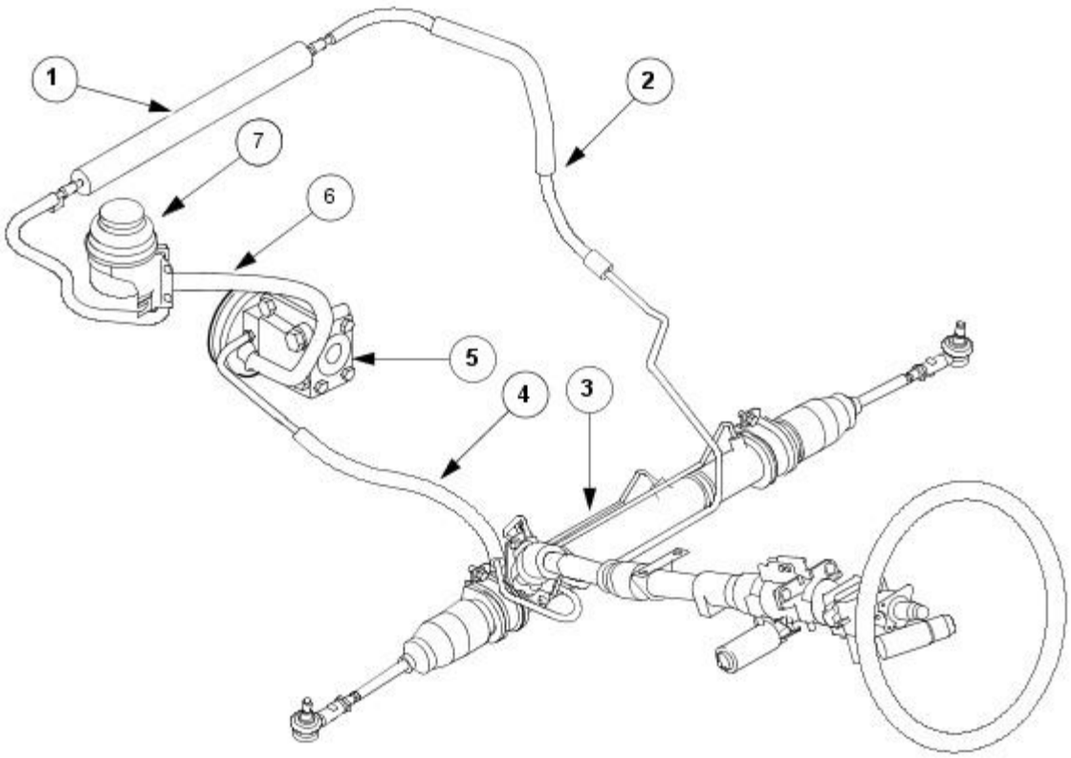

E40987

Item	Description
1	Power steering fluid cooler
2	Steering gear to fluid cooler return hose
3	Steering gear
4	Power steering pump to steering gear pressure line
5	Power steering pump
6	Power steering fluid reservoir to power steering pump supply hose
7	Power steering fluid reservoir

The power steering system consists of:

- Steering gear.
- Power steering pump.
- Power steering fluid reservoir.
- Power steering fluid cooler.
- Fluid lines and hoses.

CAUTION: Absolute cleanliness must be observed when replenishing the fluid or dismantling any part of the system.

If any major component is renewed:

• CAUTIONS:

DO NOT attempt to adjust the steering gear yoke. Failure to follow this instruction will result in the steering gear warranty to become invalid.

If a steering gear assembly is returned under warranty with leaking seals, but there is also damage to the steering gear boot/boots the steering gear warranty will be invalid. This is due to the steering gear seals being damaged due to foreign materials entering the steering gear boot and damaging the steering gear seals thereafter.

- • NOTE: If the steering gear, pump or cooler are being replaced for leakage or noise related issues and there is no evidence of fluid contamination, there is no need to replace the reservoir.

  In some cases where the fluid clearly contains particulate matter, and the system continues to function, flush the system with fresh fluid and replace the reservoir, as there is the possibility that the reservoir internal filter may be damaged or faulty.
- New power steering fluid from a sealed container must be used.

Steering gear

Mounting Brackets

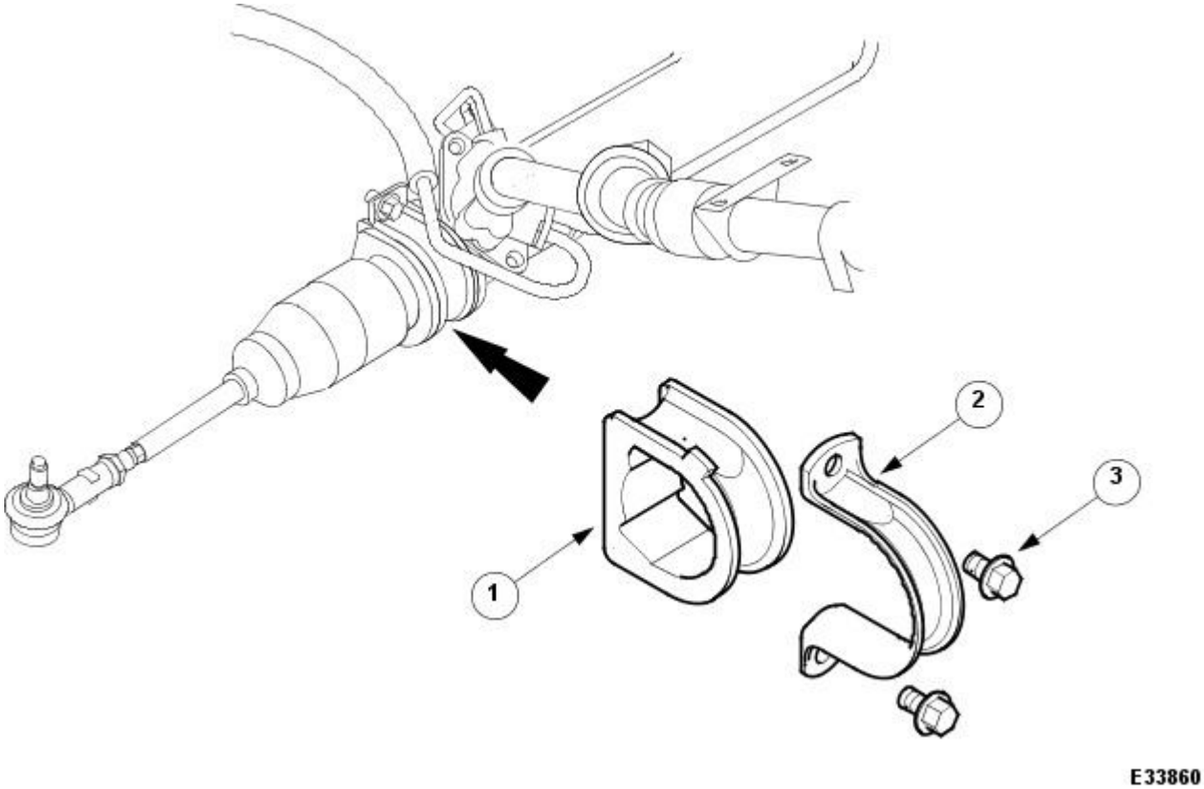

Item	Part Number	Description
1	—	Mount bushes
2	—	Mount brackets
3	—	Mount bracket securing bolts

The steering gear:

- Incorporates the servotronic 2 system which has a positive centre feel device.
- Is mounted to the rear face of the aluminium cross beam with handed mount bushes and two mount brackets which are retained to the aluminium cross beam by two retaining bolts.
- Function is to convert the rotary motion of the steering wheel, via the steering gear pinion, to the lateral motion of the steering gear.

The steering gear is not serviceable, but the following components may be treated as service items:

- Fluid lines and hoses.
- Clips and fittings for the above components.
- Centralizing cap.
- Tie-rod end.
- Steering gear boot.
- Steering gear fluid transfer pipes.

Major Components

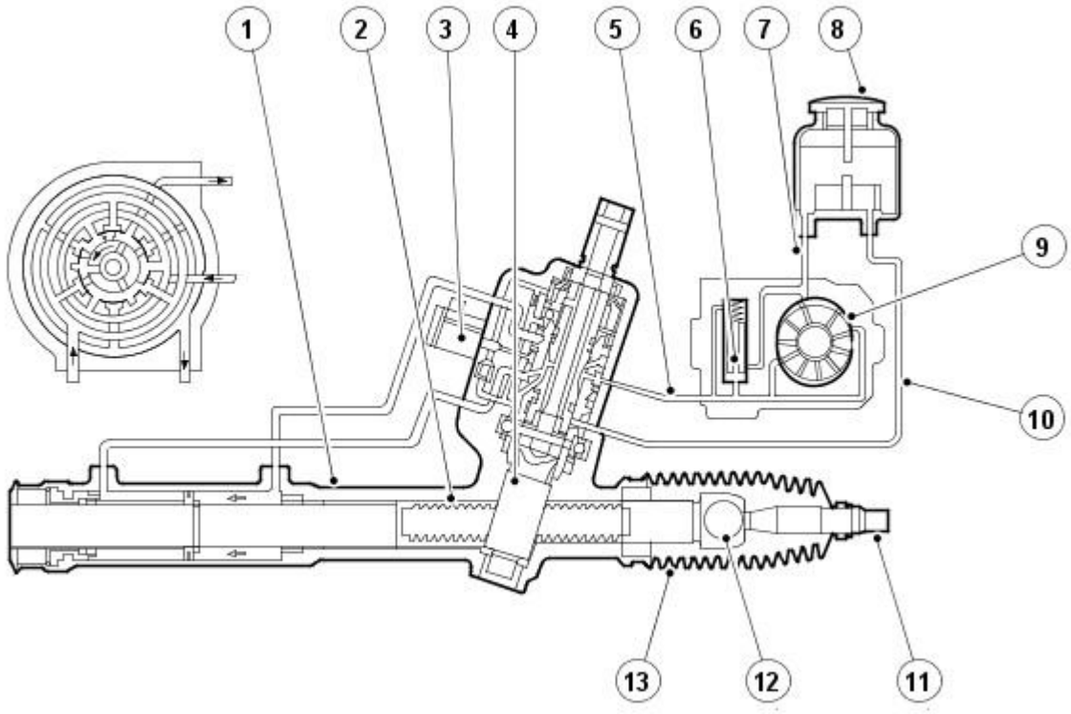

E41170

Item	Description
1	Steering gear housing
2	Steering gear
3	Power steering control valve actuator
4	Steering gear pinion
5	Power steering pump to steering gear pressure line
6	Power steering pump pressure relief and flow control valve
7	Power steering fluid reservoir to power steering pump supply hose
8	Power steering fluid reservoir
9	Power steering pump
10	Power steering gear to power steering fluid reservoir
11	Tie-rod
12	Inner ball joint
13	Steering gear gaiter

Operation

Steering in the straight-ahead position

With the steering in the straight-ahead position:

- The valve restrictions are balanced.
- Equal pressure is present on both sides of the piston.

Fluid Flow Circuit

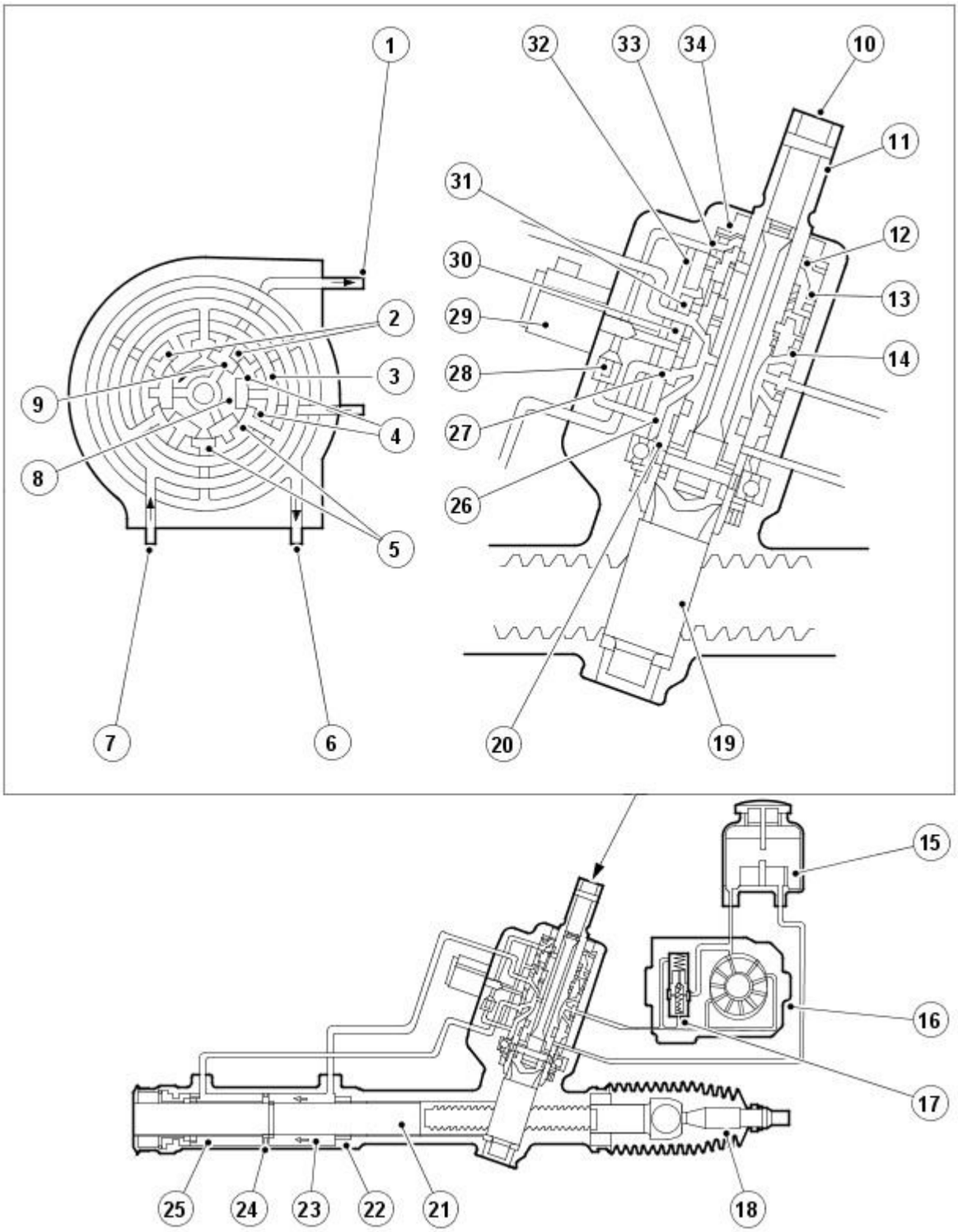

E41171

Item	Description
1	Fluid return chamber
2	Fluid return control edge
3	Fluid feed radial port
4	Fluid feed control edge
5	Axial port
6	Radial port
7	Radial port
8	Reaction chamber
9	Fluid return control port
10	Torsion bar
11	Rotor valve
12	Reaction piston
13	Reaction chamber
14	Centering piece
15	Power steering fluid reservoir
16	Power steering pump
17	Pressure relief and flow limiting control
18	Tie-rod
19	Steering gear pinion

Item	Description
20	Valve sleeve
21	Steering gear
22	Steering gear housing
23	Power cylinder right hand
24	Piston
25	Power cylinder left hand
26	Fluid return chamber
27	Radial port
28	Cut-off valve
29	Power steering control valve actuator
30	Fluid feed radial port
31	Radial port
32	Orifice
33	Ball
34	Compression spring

Turning the steering wheel clockwise

When the steering wheel is turned clockwise:

- The steering gear piston assembly of the operating cylinder move to the right.
- Pressurized fluid is supplied to the left piston chamber to provide power assistance.
- The three fluid control ports of the rotor valve are moved in a clockwise direction so that the fluid feed ports are opened further.
- As this occurs, the inlet ports close to prevent the fluid reaching axial ports in the control sleeve.
- With the valve in the operating position pressurized fluid flows through the inlet ports to the radial port in the control sleeve.
- From the control sleeve, pressurized fluid flows to the left piston chamber to provide hydraulic assistance for the piston movement.
- The fluid return control port prevents fluid flowing back to the reservoir.
- The fluid is forced out of the right piston chamber through the radial port in the sleeve to the return port in the rotor valve.

Turning the steering wheel counter-clockwise

When the steering wheel is turned counter-clockwise:

- The steering gear piston of the operating cylinder move to the left.
- Pressurized fluid is supplied to the right piston chamber to provide power assistance.

Variable ratio steering gear

Steering gear details

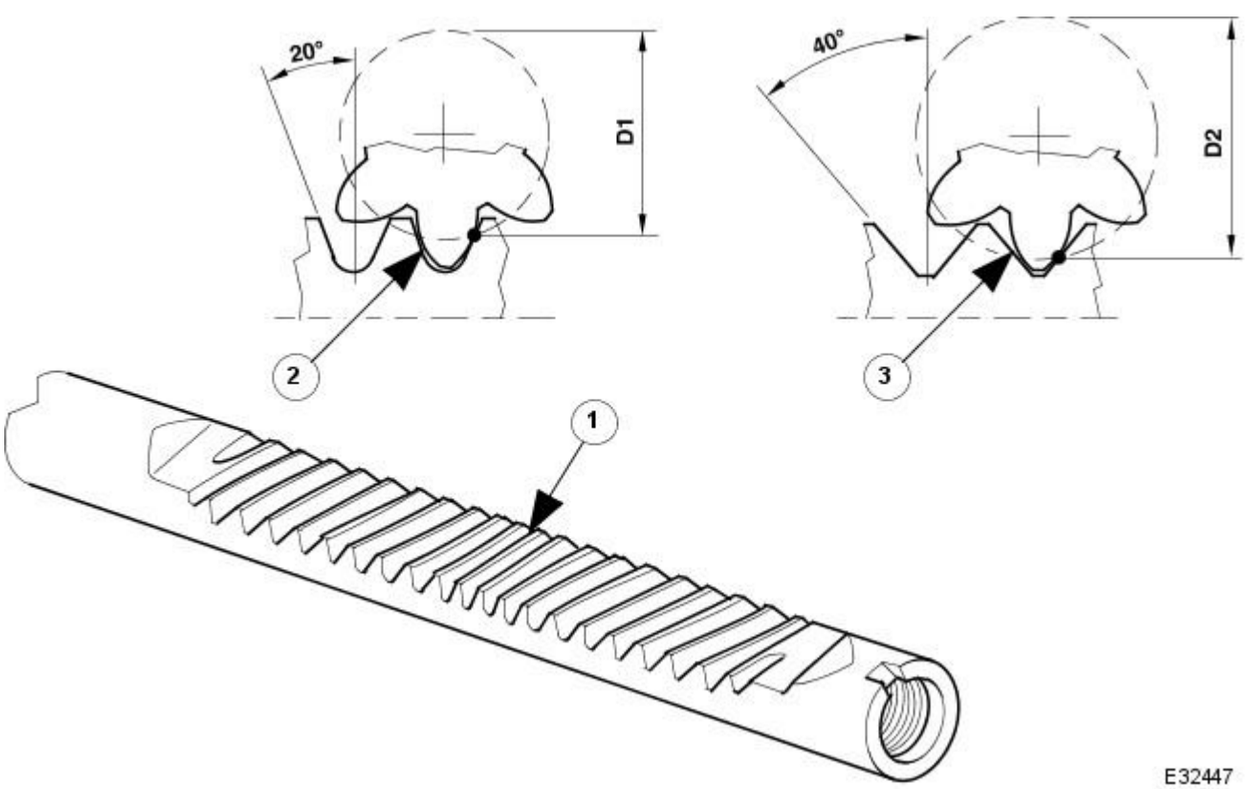

Item	Description
1	Steering gear
2	Tooth contact angles at the center of the steering gear
3	Tooth contact angles at the ends of the steering gear.

The variable ratio steering gear permits quick and precise reactions at speed and optimum vehicle control during manoeuvring.

- The steering gear incorporates teeth of varying size and angle of contact.
- This results in a steering gear operation which is relatively direct with the steering wheel in the straight ahead position.
- As the steering wheel is turned to the left or right, the ratio becomes lower.

Servotronic Unit

System Components

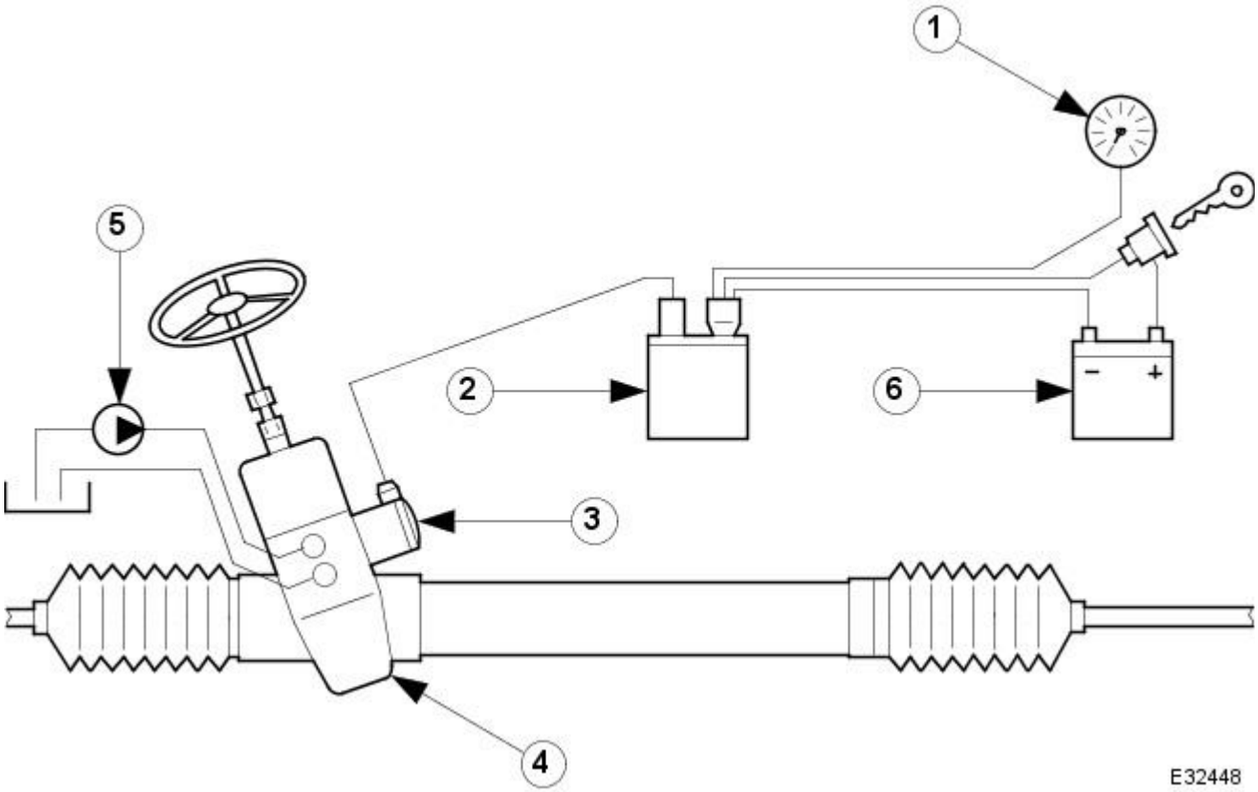

Item	Description
1	Speedometer
2	Variable assist power steering (VAPS) module
3	Power steering control valve actuator
4	Steering gear
5	Power steering pump
6	Battery

The Servotronic unit is speed dependent and is triggered by the electronic speedometer. It is entirely independent of the engine speed:

- A microprocessor evaluates the speed signal and decides the amount of hydraulic power assistance required. This in turn determines the amount of driver effort required.
- The degree of assistance is proportional to the road speed. This means that minimum driver effort is required at parking speed.
- As the road speed increases, the steering characteristic feels more direct (less hydraulic assistance), enabling precise and responsive reactions to steering wheel movement.

Power Steering Pump

Power Steering Pump

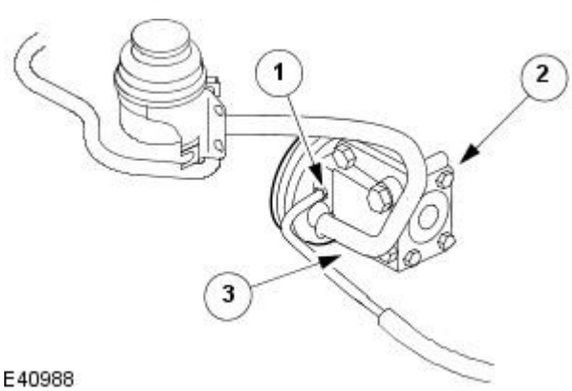

Item	Description
1	Power steering pump to steering gear pressure line
2	Power steering pump
3	Power steering fluid reservoir to power steering pump supply hose

The power steering pump:

- is mounted on a bracket installed on the front of the engine.
- is of the vane type.
- will provide 106 to 114 Bar fluid pressure.
- is belt driven from the engine crankshaft.
- function is to provide hydraulic pressure for the Power steering system.
- is not serviceable.

Fluid Reservoir

Power steering fluid reservoir and hoses

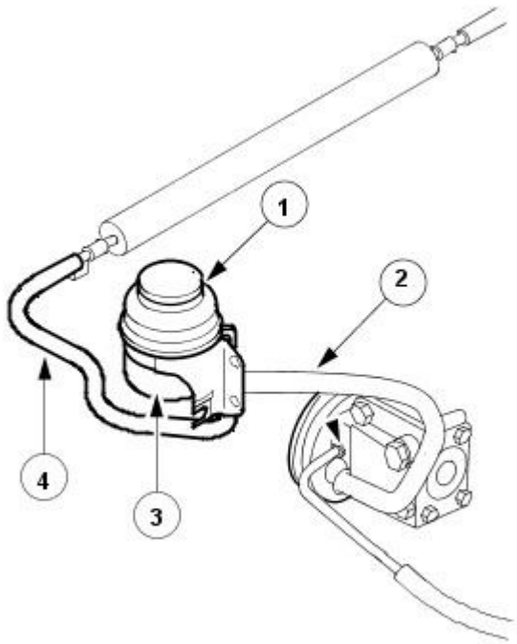

Item	Part Number	Description
1	—	Filler Cap
2	—	Power steering fluid reservoir to power steering pump supply hose
3	—	Power steering fluid reservoir
4	—	Power steering fluid cooler to power steering fluid reservoir return hose

• NOTE: The the power steering fluid reservoir integral filter is not serviceable.

• NOTE: A new power steering fluid reservoir must be fitted if the steering gear, power steering pump or power steering fluid cooler are renewed.

The power steering fluid reservoir:

- is located forward of the brake hydraulic control unit.
- incorporates a 10 micron nominal integral filter.
- has a capacity of 0,4 liters.

Supply and return hoses and lines

Latch-Plate Location

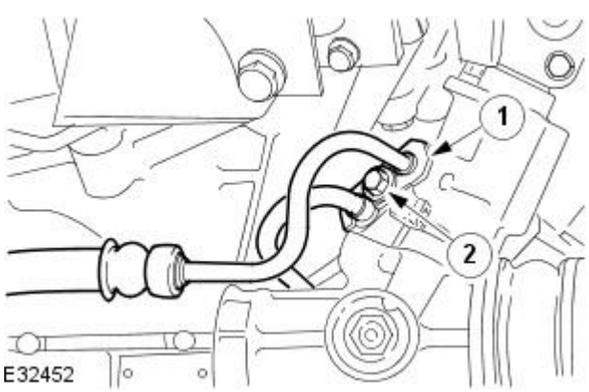

Item	Description
1	Supply and return hoses and lines latch-plate assembly
2	Latch-plate securing screw

The supply and return hoses and lines:

- Are secured to the rack housing by a latch-plate and screw.
- are both clamped with retaining clips to secure them to the reservoir.
- 'O' rings are serviceable.

Quick release coupling

Connector Details

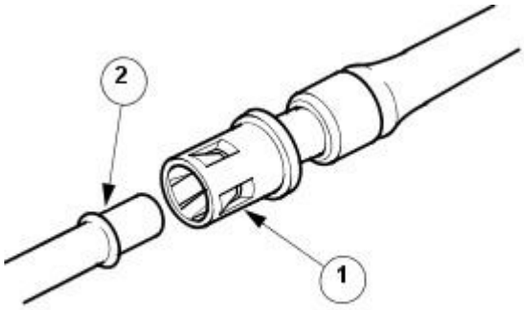

E33863

Item	Description
1	Quick release coupling
2	Return line • A quick release coupling with double 'O' ring seals is incorporated in the return hose and is retained to the right hand chassis side member. • The supply and return hoses and lines are used to connect the system components together to form a functional system. • All supply and return hoses and lines should be renewed as complete assemblies. • The quick release coupling 'O' rings are not serviceable. • All supply and return hoses and lines are designed to reduce system noise. • A special tool is necessary to disconnect the quick release coupling.

Power steering fluid cooler

Power steering fluid cooler location

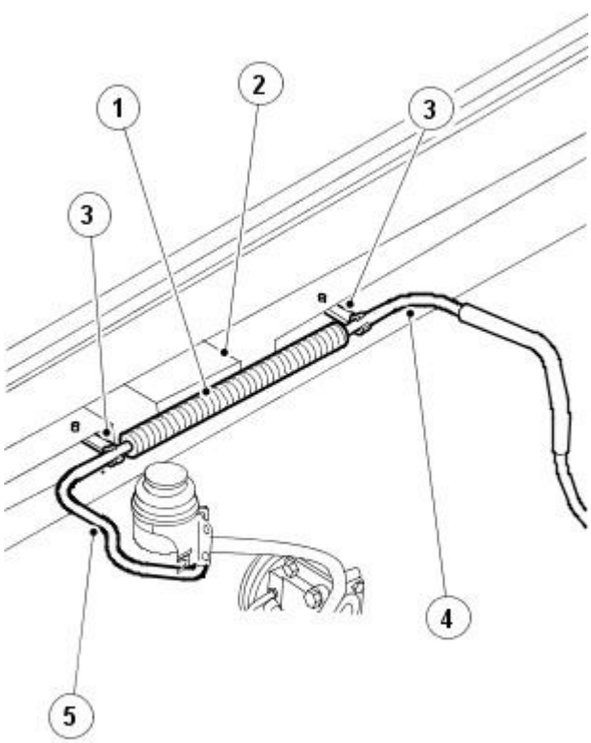

E41172

Item	Description
1	Power steering fluid cooler
2	Bumper beam
3	Power steering fluid cooler retaining brackets
4	Power steering gear to power steering fluid cooler fluid line
5	Power steering fluid cooler to power steering fluid reservoir fluid line

The Power steering fluid cooler is:

- of the wire bound tube type.
- installed on the body bumper with retaining brackets
- to cool the fluid as it returns to the reservoir.

Published: 11-May-2011

Power Steering - Power Steering

Diagnosis and Testing

For additional information, refer to Section 211-00 Steering System - General Information.

Power Steering - Power Steering Control Valve Actuator

Removal and Installation

Removal

1. Remove steering rack. Refer to operation 57.10.01.

2. CAUTION: To prevent the ingress of foreign particles into the steering rack, make sure the blanking plugs stay in position,

Place steering rack on a work bench.

3. Clean exterior of steering rack.

4. Fit jaw protectors to a vice and position steering rack in the vice with the pinion housing uppermost.

- Carefully tighten the vice - do not use excessive clamping force.

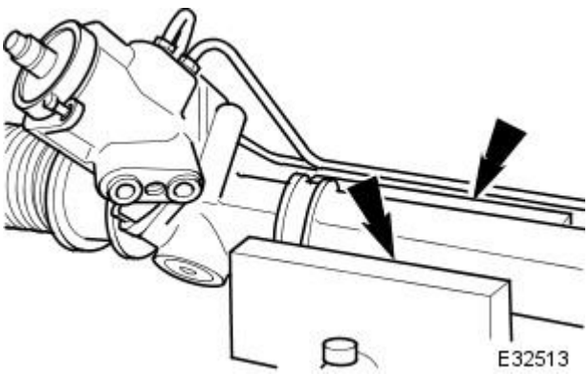

5. Drain residual fluid from steering rack.

- Place a drain pan under steering rack.
- Remove blanking plugs from pinion housing.
- Rotate pinion shaft three times lock-to-lock, to dispel as much residual fluid as possible.
- Fit blanking plugs.

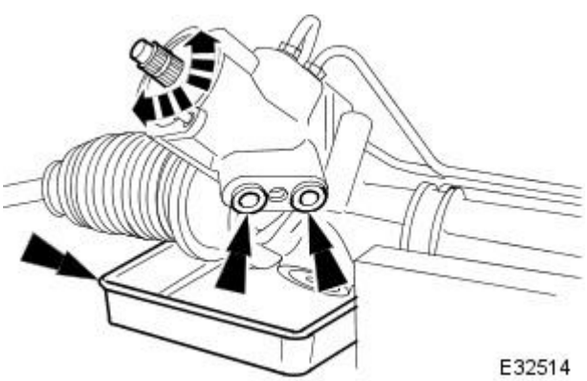

6. Centralize steering rack.

- Centralize travel of steering rack in steering rack housing.

  6. CAUTION: The pinion shaft must not be rotated from this setting, until a new dirt protection shield has been fitted.

- Move pinion shaft to align centralising index - located on dirt protection shield, with alignment hole - located on pinion valve housing.

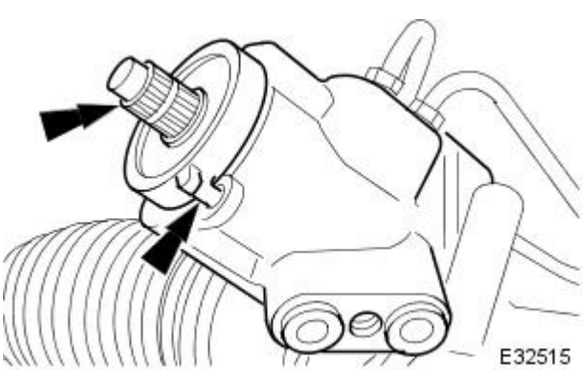

7. Remove and discard dirt protection shield.

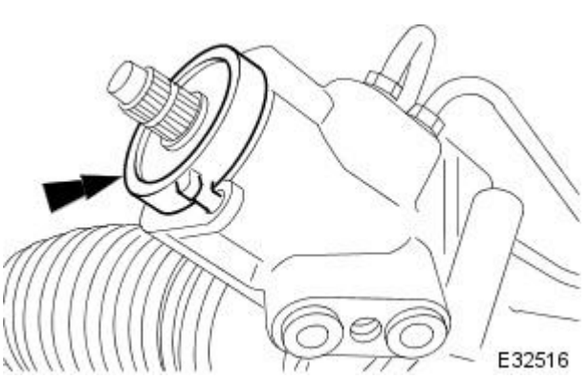

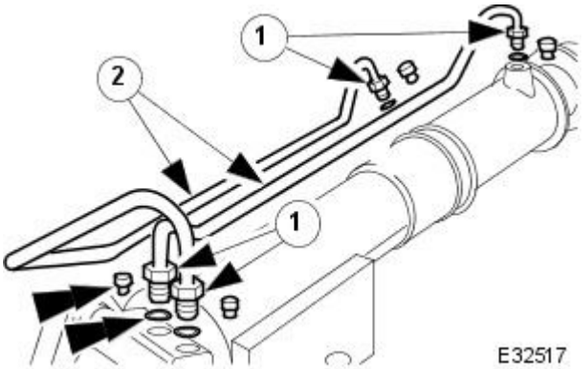

8. Remove oil transfer pipes.

1. Release union nuts.
2. Carefully, remove oil transfer pipes - taking care not to distort them.

- Remove and discard O-ring seals from pipes.
- Place pipes in a clean plastic bag until required for assembly.
- Fit blanking plugs to transfer ports.

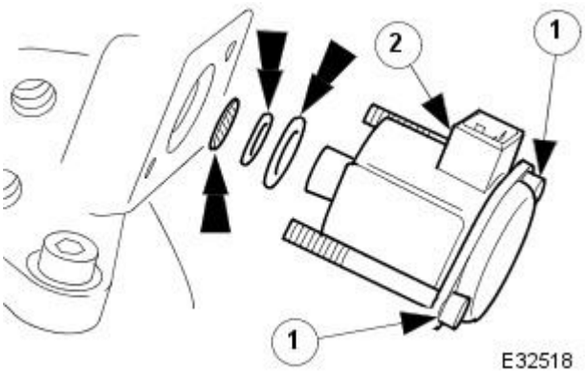

9. NOTE: Note orientation of transducer for assembly reference.

Remove transducer.

1. Remove upper and lower screws.
2. Remove transducer.

- Remove and discard O-ring seals.
- Retrieve and discard filter.
- Place transducer in a clean plastic bag until required for assembly.

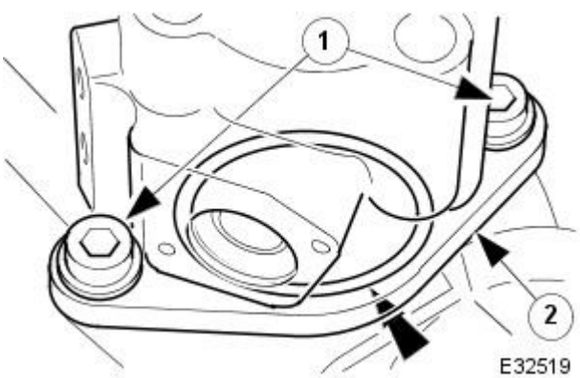

10. NOTE: Note orientation of pinion valve housing for assembly reference.

Remove pinion valve housing.

1. Remove and discard screws.
2. Carefully lift the pinion valve housing from the steering rack using a steady upward twisting motion. Excessive force and rocking of the housing should be avoided, to prevent damaging the rotary valve O-ring seals.

- Remove and discard the O-ring seal from between the pinion housing and steering rack main body.

11. Cover rotary valve assembly with a clean plastic bag.

12. Clean and inspect all relevant components and mating faces.

Installation

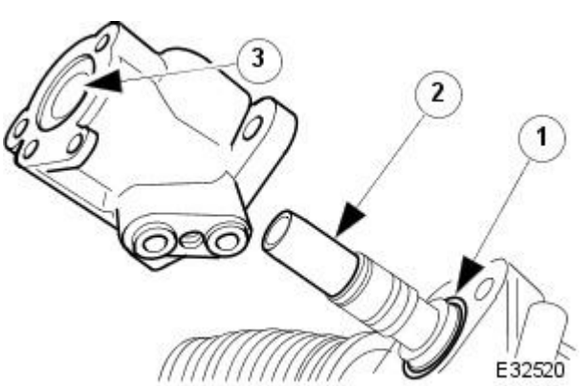

1. Prepare the new pinion valve housing.

- Remove plastic bag from rotary valve assembly.
  1. Fit new O-ring seal to steering rack body.
  2. Fit oil seal protector tool (provided with seal kit) to pinion shaft splines.
  3. Apply grease, Texando F020 or equivalent, to pinion seal lip.

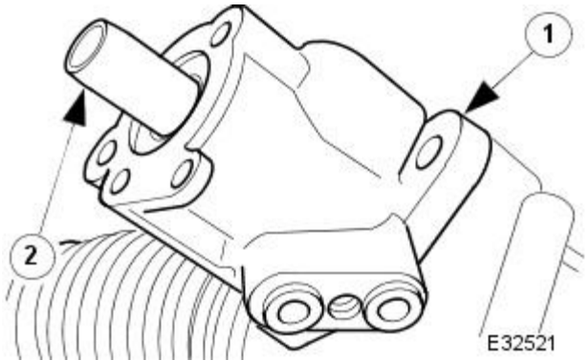

2. Fit pinion valve housing to steering rack.

1. Carefully fit the pinion valve housing to the steering rack using a steady downward twisting motion. Excessive force and rocking of the housing should be avoided, to prevent damaging the rotary valve O-ring seals.
2. Remove seal protector tool.

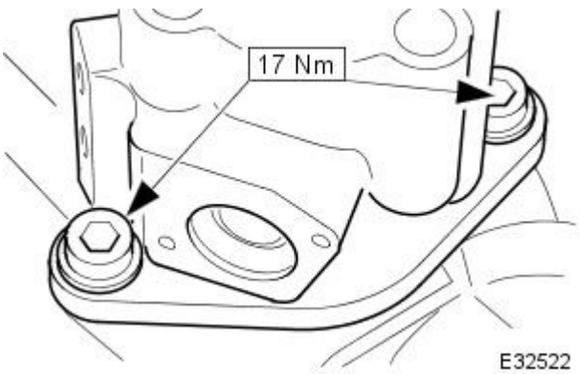

3. Fit and tighten screws.

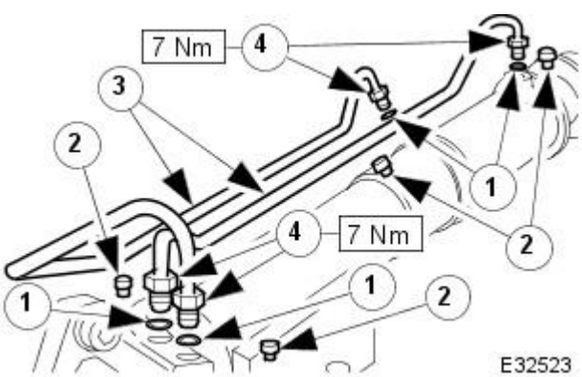

4. Fit transfer pipes.

1. Fit new O-ring seals to transfer pipes.

- Lightly grease the seals using Texando F020 or equivalent grease.

2. Remove blanking plugs.
3. Fit transfer pipes carefully, to avoid distortion. Ensure that they are fitted fully into the ports.
4. Tighten union nuts.

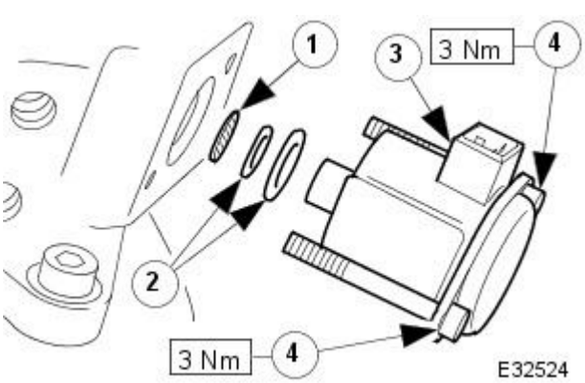

5. Fit transducer to pinion valve housing.

1. Fit a new filter to pinion housing transducer port.
2. Fit new O-ring seals to transducer.

- Lightly grease O-ring seals using Texando F020 or equivalent grease.

3. Fit transducer, make sure of correct orientation as referenced in removal.
4. Fit and tighten new screws.

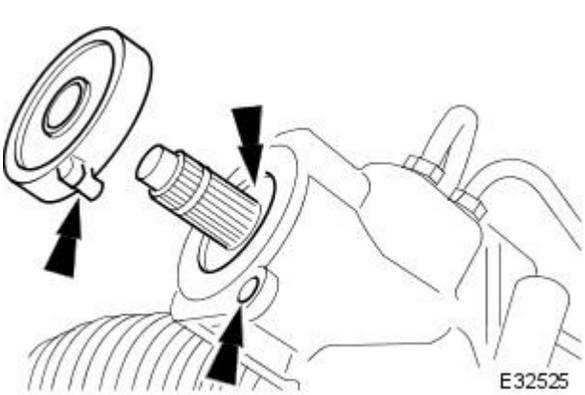

6. Fit dirt protection shield.

- Smear a small amount of Texando F020 or equivalent grease into the cavity of the pinion valve housing.
- Fit the dirt protection shield to the pinion shaft splines - make sure that the centralising index peg locates in the alignment hole of the pinion valve housing.

7. Operate the steering rack lock-to-lock to check for freedom of movement, without tight spots.

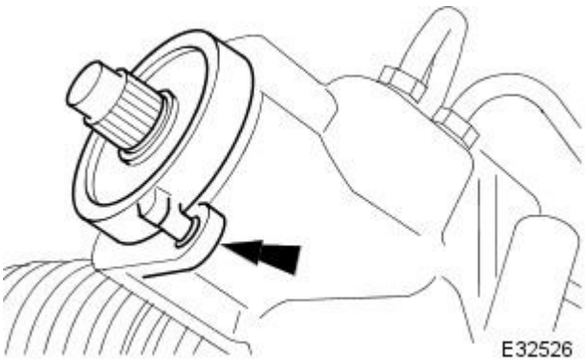

- The centralising index peg will shear (this is intentional).

8. Centralise the steering rack.

- Centralise the rack, by sight, aligning the plastic centralising pin on the dirt protection shield (sheared since fitting) with the alignment hole in the pinion housing.

9. Remove steering rack from vice.

10. Fit steering rack to vehicle. Refer to Operation 57.10.01.

Power Steering - Power Steering Fluid Cooler

Removal and Installation

Special Tool(s)	
E36393	Quick Fit Connector Release Tool 310-044 (JD 182)

Removal

1. Position vehicle on a four-post ramp.

2. Open engine compartment and fit paintwork protection covers.

3. Set engine compartment cover to service access position.

4. Place a drain pan under the vehicle.

5. Disconnect cooler to reservoir hose, at the reservoir end.

1. Release clip.
2. Disconnect hose.

- Fit blanking plugs to reservoir stub pipe and hose.
- Re-route hose to front of coolant radiator.

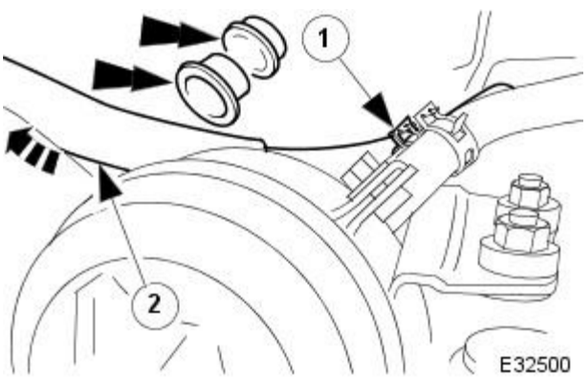

6. Raise vehicle.

7. Disconnect the cooler to steering rack return hose.

1. Release the Quick Fit hose clip using special tool 310 - 044.
2. Disconnect hoses and remove tool.

- Fit blanking plugs to both sections of hose.
- Re-route hose to front of coolant radiator

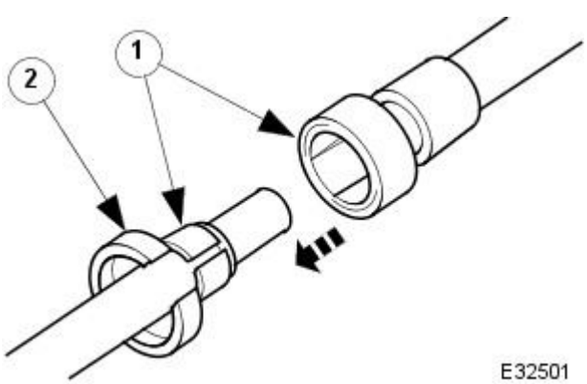

8. Release cooler from retaining clips.

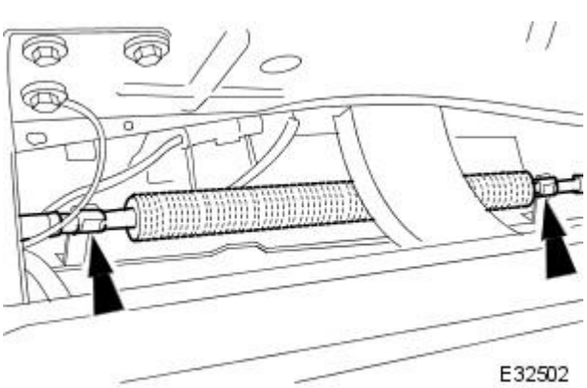

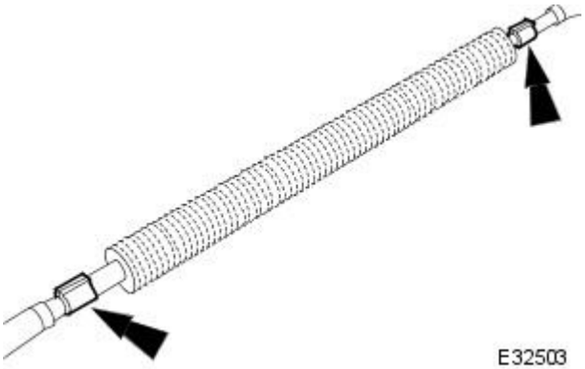

9. Remove mounting rubbers from cooler.

10. Discard drained fluid.

Installation

1. NOTE: If the cooler is being replaced for leakage or noise related issues and there is no evidence of fluid contamination, there is no need to replace the reservoir.

Installation is reverse of removal procedure.

- In some cases where the fluid clearly contains particulate matter, and the system continues to function, flush the system with fresh fluid and replace the reservoir, as there is the possibility that the reservoir internal filter may be damaged or faulty.

Power Steering - Power Steering Fluid Reservoir

Removal and Installation

Removal

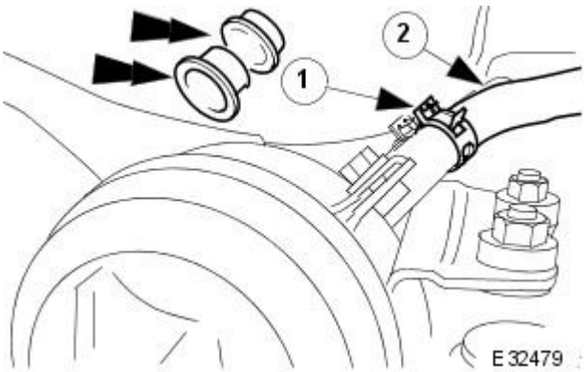

1. Open engine compartment and fit paintwork protection covers.
2. Place suitable absorbent material below fluid reservoir to absorb spillage.
3. Disconnect pump feed hose from reservoir.
   1. Release clip.
   2. Disconnect hose.
   - Fit blanking plugs to reservoir stub pipe and hose.

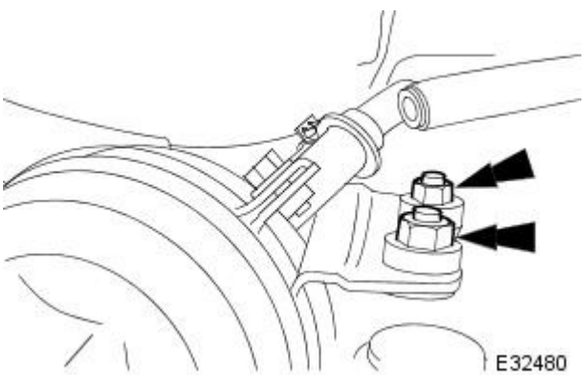

4. Remove nuts from reservoir mounting bracket.
   - Reposition reservoir to gain access to return hose.

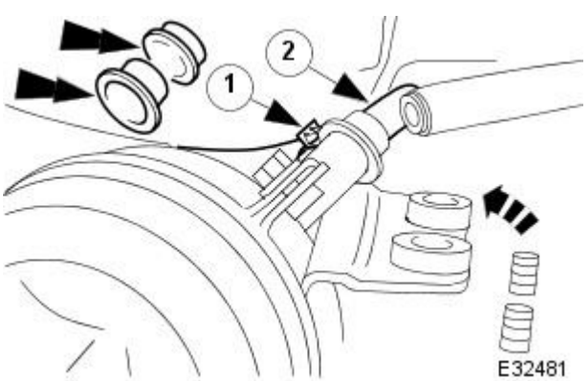

5. Remove return hose from reservoir.
   1. Release clip.
   2. Disconnect hose.
   - Fit blanking plugs to reservoir stub pipe and hose.

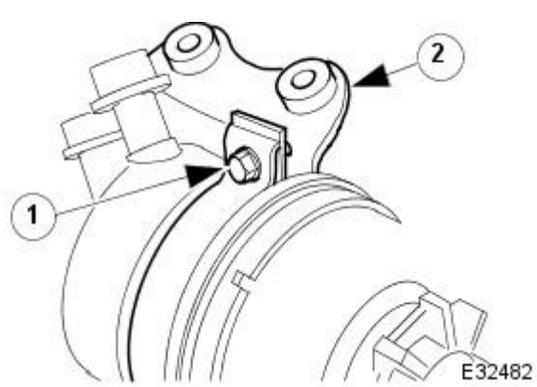

6. Remove reservoir.
7. Remove reservoir from mounting bracket.
   1. Remove clamp bolt.
   2. Remove reservoir from bracket.

Installation

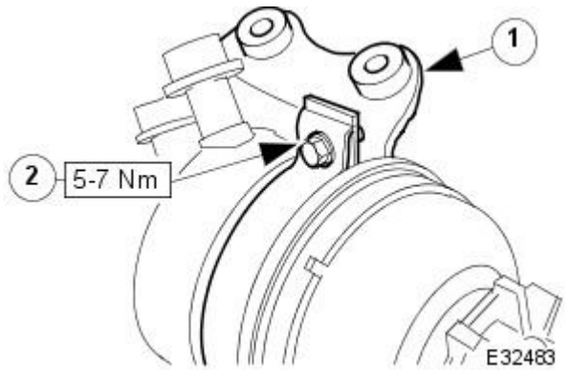

1. Fit reservoir to mounting bracket.

1. Position bracket to reservoir.
2. Fit and tighten clamp bolt.

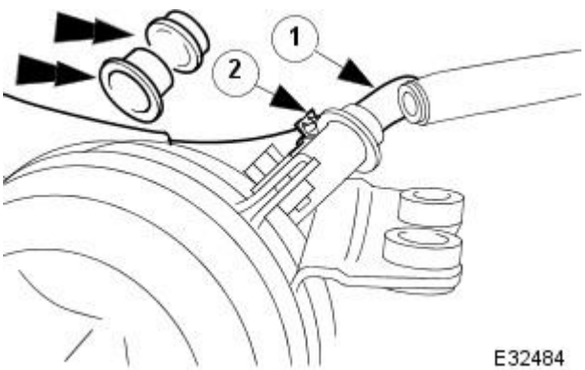

2. Connect return hose to reservoir.

- Remove blanking plugs.
  1. Connect hose.
  2. Position and tighten clip.

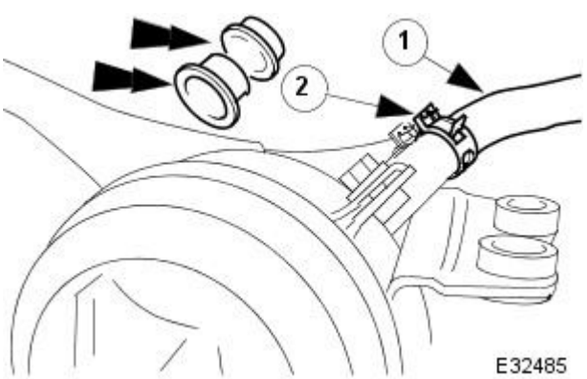

3. Connect pump feed hose to reservoir.

- Remove blanking plugs.
  1. Connect hose.
  2. Position and tighten clip.

4. Remove absorbent material from below the reservoir.

- Clean any fluid spillage from below the reservoir.

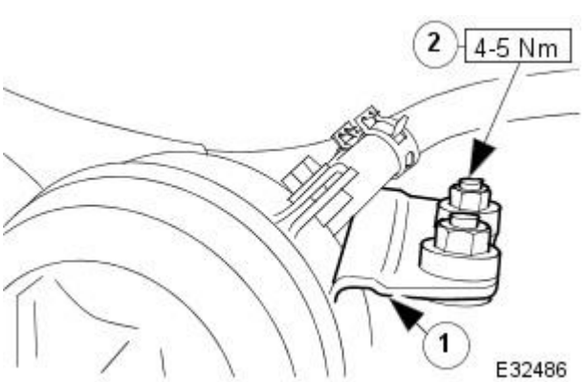

5. Fit reservoir.

1. Fit mounting bracket to body studs.
2. Fit and tighten nuts.

6. Fill reservoir with fluid to bottom of filler neck.

- Fill reservoir
- Wait for air to escape; this will be evident when air bubbles are no longer present.
- Top-up fluid to bottom of filler neck if necessary.

7. Raise front of vehicle and support on stands. Refer to section 100-02.

8. Do not start engine, turn steering from lock-to-lock three times.

9. Start the engine.

- Immediately top up with fluid as air is expelled.
- Turn the steering lock-to-lock three times.

10. Switch engine off.

11. Lower vehicle.

12. Top-up fluid level to maximum mark on dip-stick. Do not overfill.

- Fit reservoir filler cap.

13. Remove paintwork protection covers.

Power Steering - Power Steering Pump

Removal and Installation

Removal

All vehicles

1. Remove the cooling fan motor and shroud.
For additional information, refer to: Cooling Fan Motor and Shroud (303-03A Engine Cooling, Removal and Installation).

Vehicles without supercharger

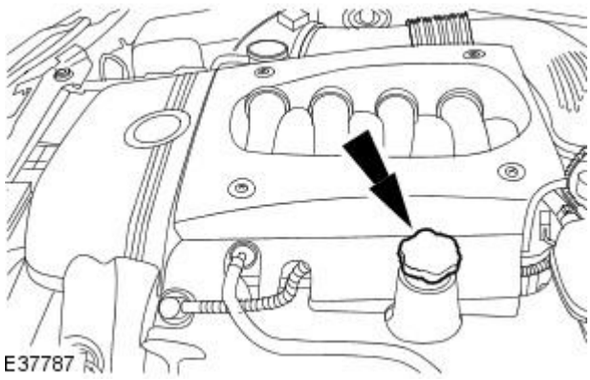

2. Remove the oil filler cap.

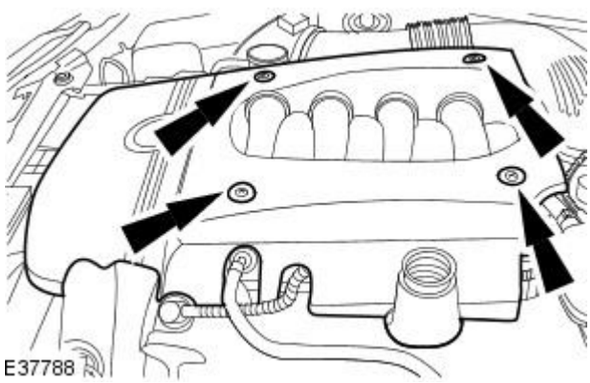

3. Remove the engine cover.

All vehicles

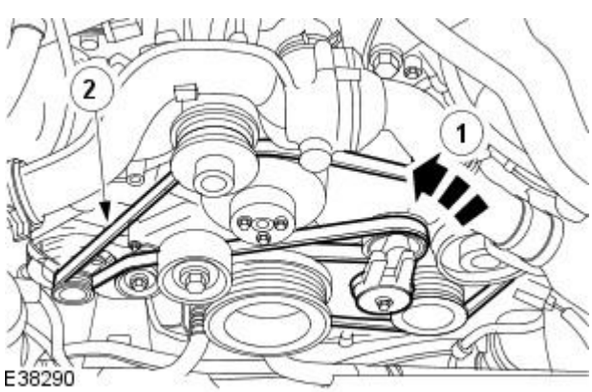

4. Detach the accessory drive belt.

1. Rotate the accessory drive belt tensioner counter-clockwise.

- Use a 3/8 inch square drive bar to rotate the accessory drive belt tensioner.

2. Detach the accessory drive belt.

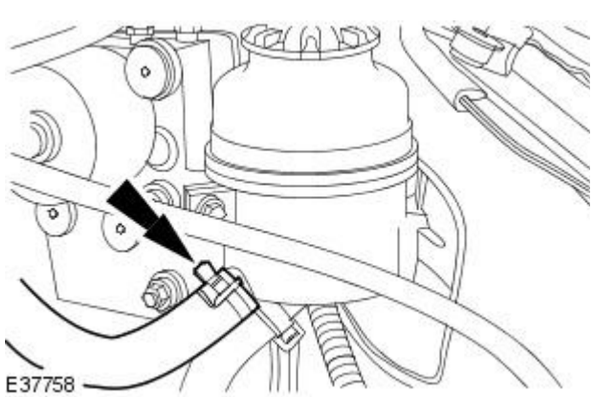

5. CAUTIONS:

If power steering fluid comes into contact with the paintwork, the affected area must be immediately washed down with cold water.

Cap the power steering line to prevent loss of fluid and dirt ingress.

• NOTE: Drain the power steering fluid into a suitable container.

Disconnect the power steering fluid reservoir to power steering pump supply hose.

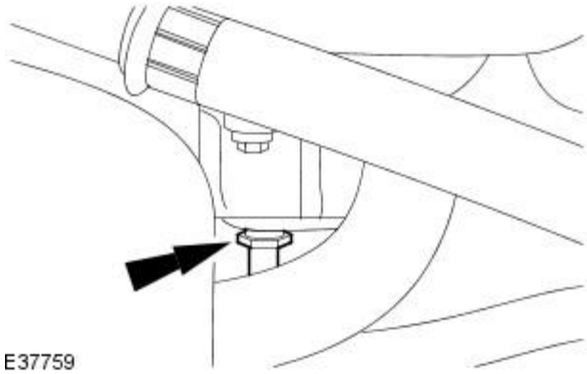

6. CAUTIONS:

If power steering fluid comes into contact with the paintwork, the affected area must be immediately washed down with cold water.

Cap the power steering line to prevent loss of fluid and dirt ingress.

• NOTE: Drain the power steering fluid into a suitable container.

Disconnect the power steering pump to steering gear pressure line.

- Remove and discard the O-ring seal.

7. Raise the vehicle.

8. Remove the power steering pump lower retaining bolts.

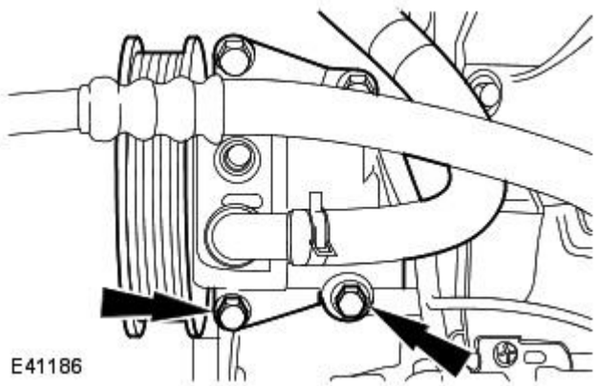

9. Lower the vehicle.

10. Remove the power steering pump.

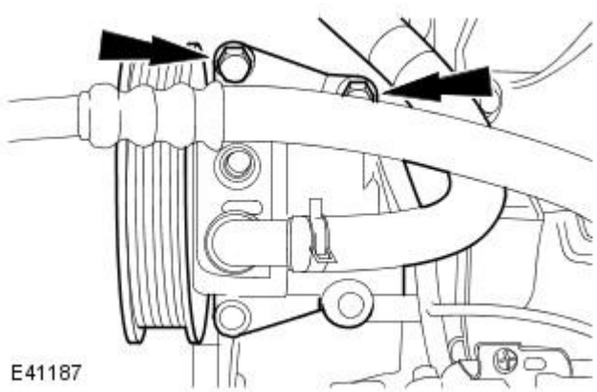

11. Remove the power steering fluid reservoir to power steering pump supply hose.

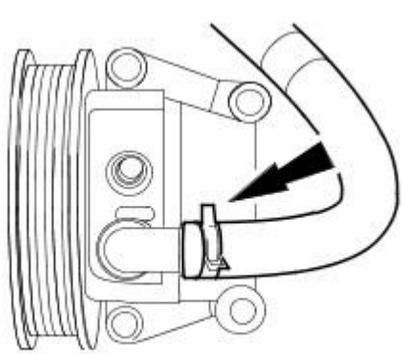

Installation

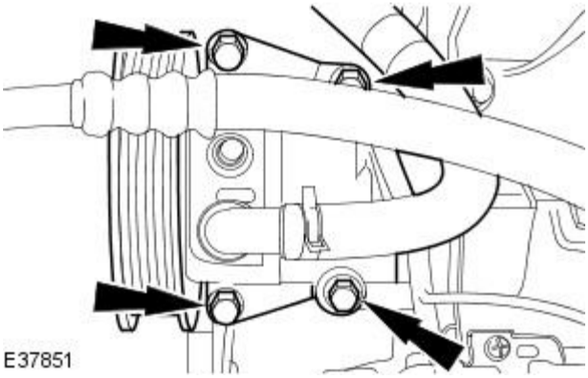

1. To install, reverse the removal procedure.

- Tighten to 25 Nm.

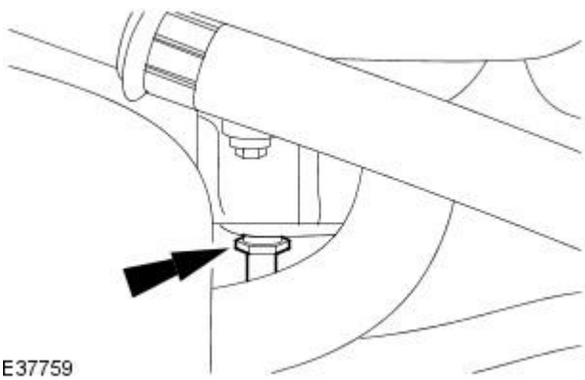

2. NOTE: Install a new O-ring seal.

Tighten to 25 Nm.

3. NOTE: If the steering pump is being replaced for leakage or noise related issues and there is no evidence of fluid contamination, there is no need to replace the reservoir.

In some cases where the fluid clearly contains particulate matter, and the system continues to function, flush the system with fresh fluid and replace the reservoir, as there is the possibility that the reservoir internal filter may be damaged or faulty.

Power Steering - Steering Gear

Removal and Installation

Special Tool(s)	
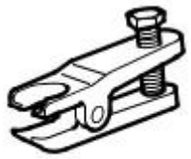 E36397	Taper Separator 211-098 (JD 100)

Removal

1. Open engine compartment and fit paintwork protection covers.

2. Centralize steering wheel and remove ignition key.

3. Raise vehicle on a four-post ramp.

4. Place a drain pan under the steering rack

5. From below the vehicle, check that steering rack is centralised by aligning the centralising notch on the dirt protection cover with the location hole in the pinion housing casting.

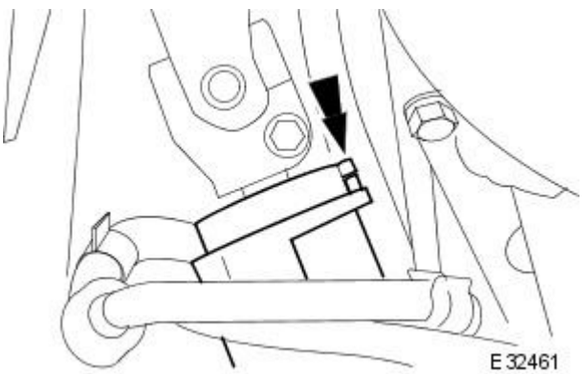

6. Remove nuts from LH and RH tie rod ends.

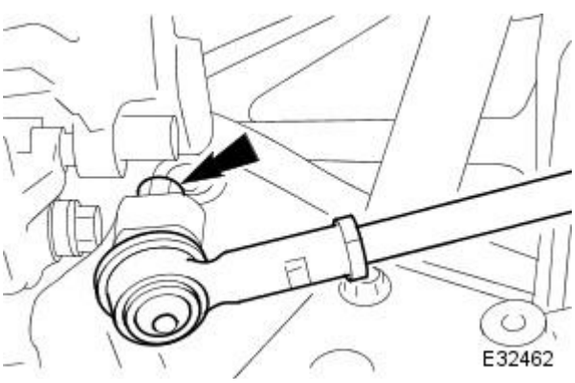

7. Release tie rod end taper-pin from steering arm.

1. Fit special tool to tie rod end.
2. Tighten tool bolt to release taper.

- Remove tool.
- Repeat procedure on opposite tie rod end.

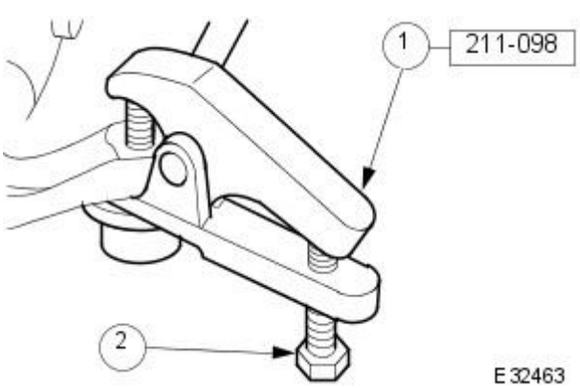

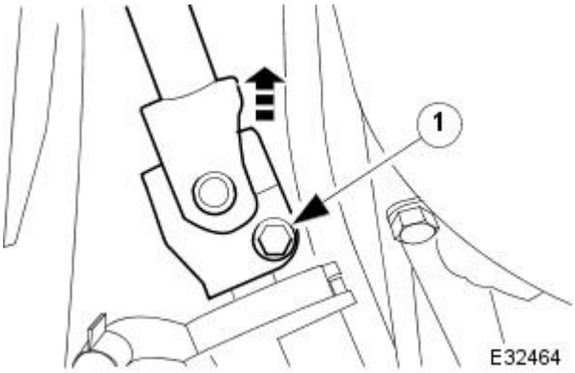

8. Release steering column from pinion shaft.

1. Remove clamp bolt.

- Move column upwards to release.

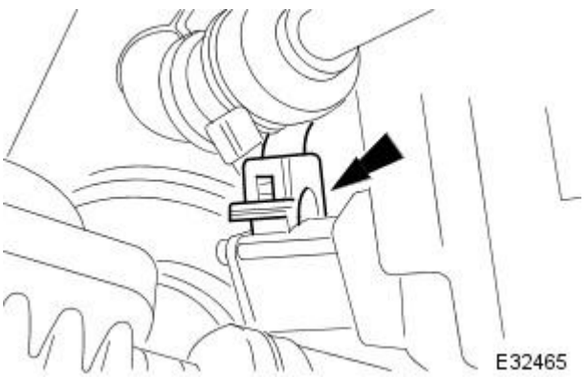

9. Disconnect electrical connector from steering rack transducer.

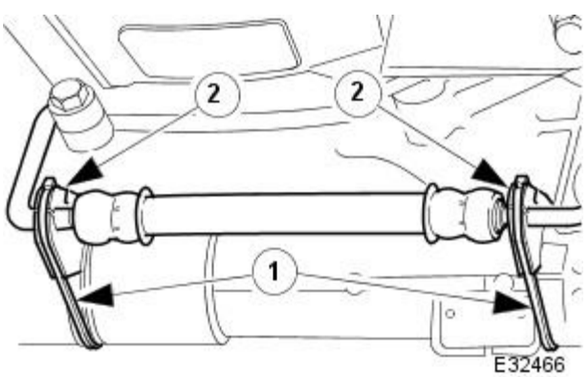

10. Remove insulation rubbers from hose secured to steering rack.

1. Remove tie straps.
2. Remove insulation rubbers.

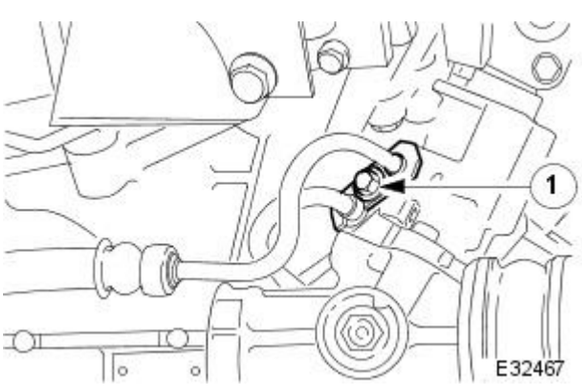

11. Release retaining plate from pinion shaft cover, to access hoses.

1. Remove bolt.

- Move retaining plate along hose.

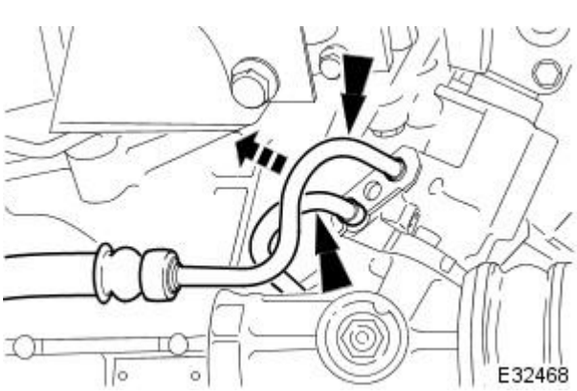

12. Position drain pan under pinion-shaft housing and disconnect hoses.

- Allow fluid to drain.

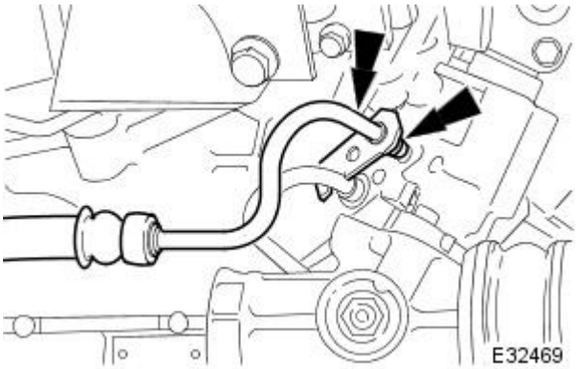

13. Remove and discard O-ring seal from feed hose.

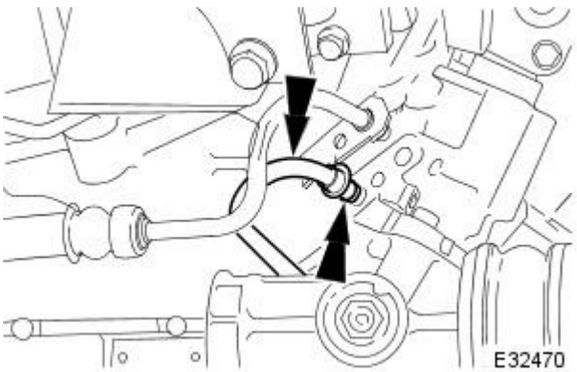

14. Remove and discard O-ring seal from return hose.

15. Fit blanking plugs to feed hose, return hose and pinion housing ports.

16. NOTE: The steering rack mounting bushes are handed; they are marked accordingly and should be replaced as a pair.

Remove drain pan and discard fluid.

17. Remove steering rack mounting bracket bushes. Refer to operation 57.10.30.

18. NOTE: When removing steering rack, manoeuvre return pipe past the pinion housing to steering rack pipes.

Remove steering rack.

19. Using a tap (M10 x 1.5 mm), clean the steering rack to crossbeam bolt hole threads.

Installation

1. NOTE: When installing steering rack, manoeuvre return pipe past the pinion housing to steering rack pipes.

Position steering rack to vehicle.

2. Fit steering rack mounting bracket bushes. See operation 57.10.30.

3. Unscrew tie rod end, taper pin nuts.

- Remove and discard protective covers from tie rod ends.

4. A new steering rack and pinion housing assembly is supplied with a dirt protection cover/centralizing cap fitted.

5. Remove blanking plugs from feed and return hoses and pinion housing ports of the new steering rack.

6. Connect return hose to pinion shaft housing.

- Apply clean PAS fluid to a new O-ring and fit to hose.
- Connect and fully seat hose.

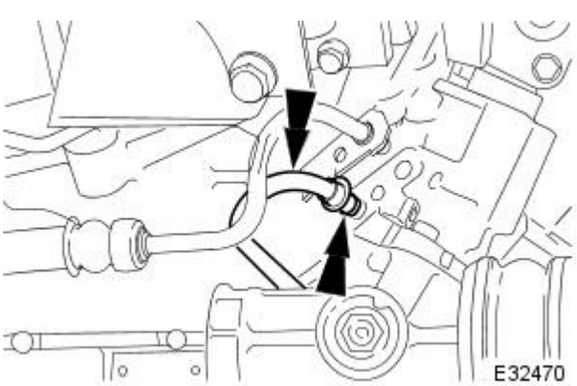

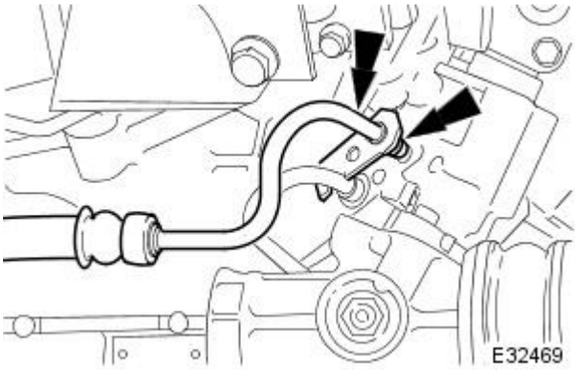

7. Connect feed hose to pinion shaft housing.

- Apply clean PAS fluid to a new O-ring and fit to hose.
- Connect and fully seat hose.

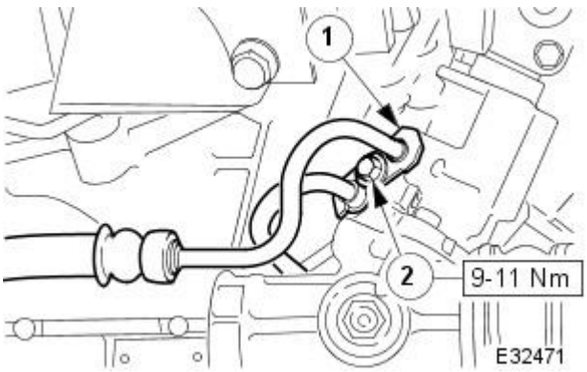

8. Fit retaining plate to pinion housing.

1. Align retaining plate and hoses.
2. Fit and tighten bolt.

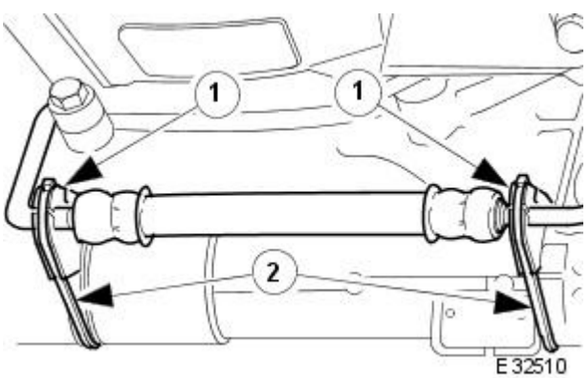

9. Clean any fluid spillage from steering rack and surrounding area.

10. Secure hose to steering rack.

1. Fit insulation rubbers.
2. Secure hose to steering rack with tie straps.

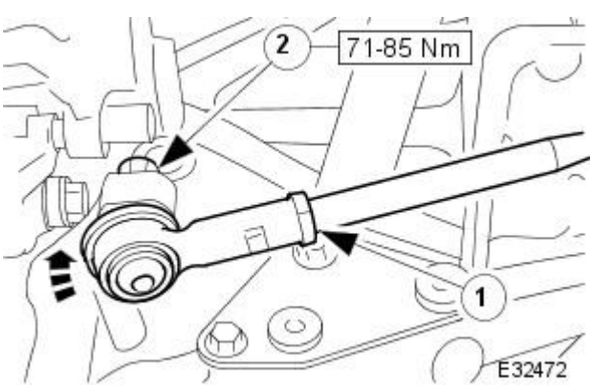

11. Connect tie rod ends.

1. Locate tie rod end into steering arm.
2. Fit and tighten nut.

- Repeat procedure to fit opposite tie rod end.

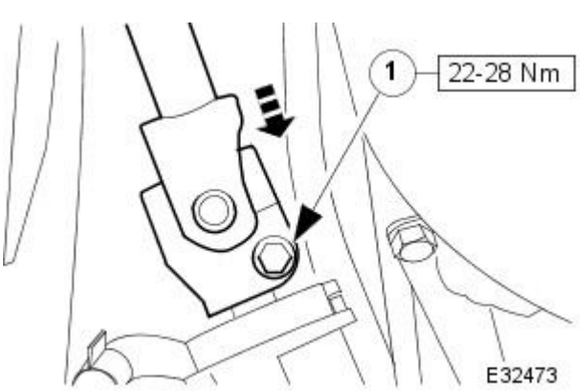

12. NOTE: Make sure steering wheel and wheels are in the straight ahead position before fitting steering column.

Fit steering column to pinion shaft.

- Move column downwards onto pinion shaft splines.
  1. Fit and tighten clamp bolt.

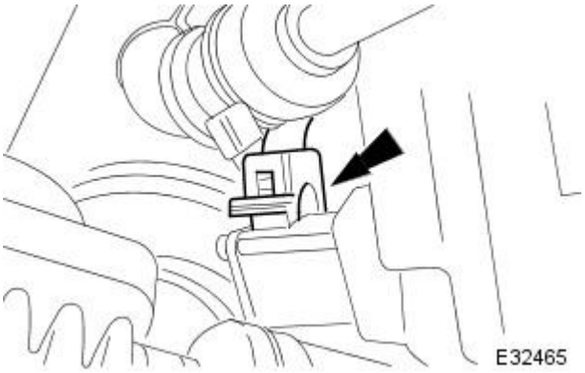

13. Connect electrical connector to steering rack transducer.

14. NOTE: If the steering gear is being replaced for leakage or noise related issues and there is no evidence of fluid contamination, there is no need to replace the reservoir.

In some cases where the fluid clearly contains particulate matter, and the system continues to function, flush the system with fresh fluid and replace the reservoir, as there is the possibility that the reservoir internal filter may be damaged or faulty.

15. Check and adjust front wheel alignment.

Power Steering - Steering Gear Bushing

Removal and Installation

Removal

1. NOTE: The steering rack mounting bracket bushes are handed; they are marked accordingly and should be replaced as a pair.

Raise vehicle on a four-post ramp.

2. Release, but do not remove, steering rack RH mounting bracket bolts.

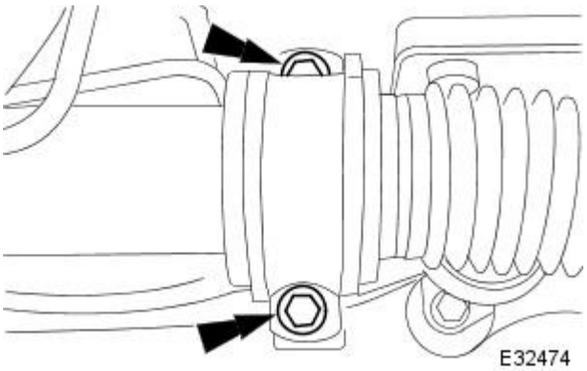

3. NOTE: For assembly reference note orientation of mounting bracket before removing.

Remove steering rack LH mounting bracket.

- Remove bolts.
- Remove mounting bracket.

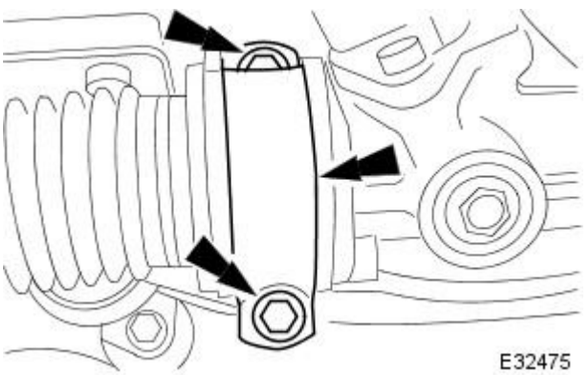

4. NOTE: For assembly reference note orientation of mounting bush before removing.

Remove and discard LH mounting bush.

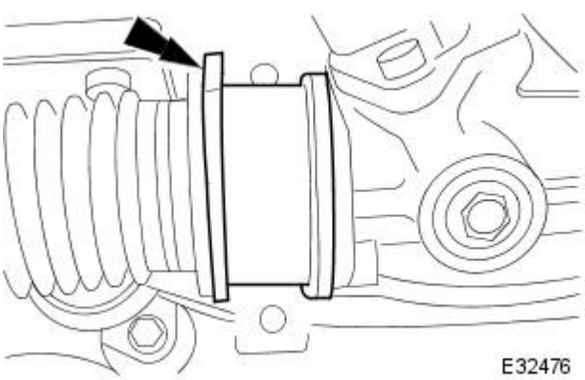

5. With reference to orientation of previous bush, fit new LH mounting bush to steering rack.

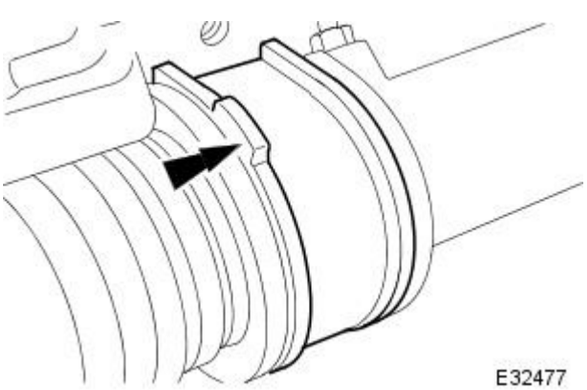

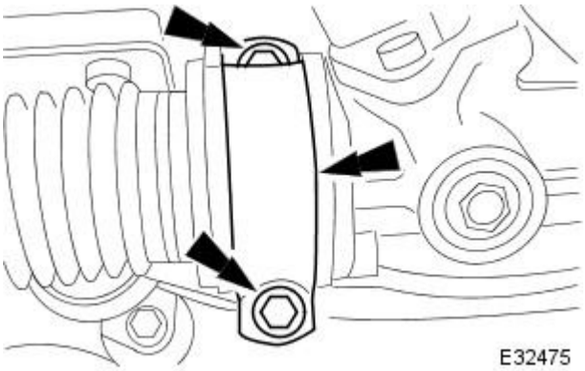

6. With reference to orientation of mounting bracket as noted in removal, fit LH mounting bracket to steering rack.

- Fit bracket.
- Fit, but do not tighten bolts.

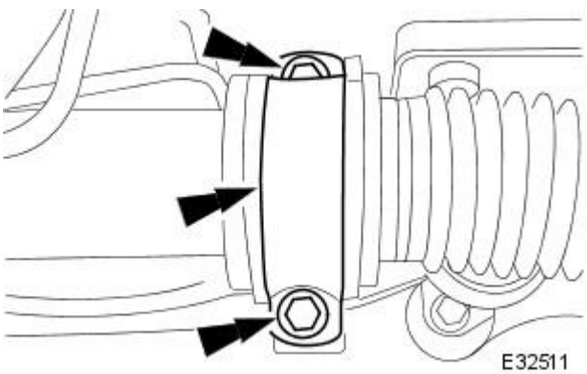

7. NOTE: For assembly reference note orientation of mounting bracket before removing.

Remove steering rack RH mounting bracket.

- Remove bolts.
- Remove mounting bracket.

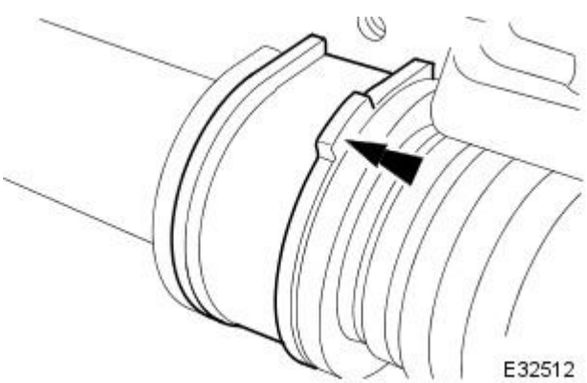

8. NOTE: For assembly reference note orientation of mounting bush before removing..

Remove and discard RH mounting bush.

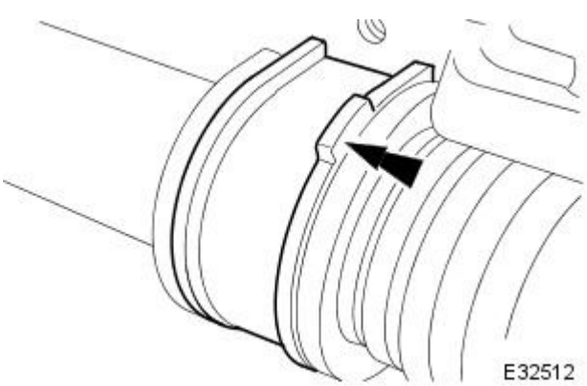

9. With reference to orientation of old bush, fit new RH mounting bush to steering rack.

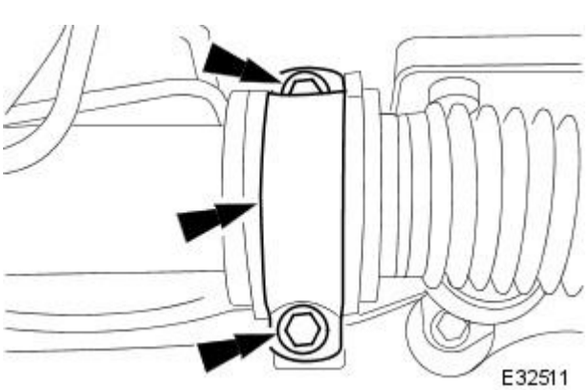

10. With reference to orientation of mounting bracket as noted in removal; fit RH mounting bracket to steering rack.

- Fit bracket.
- Fit, but do not tighten bolts.

Installation

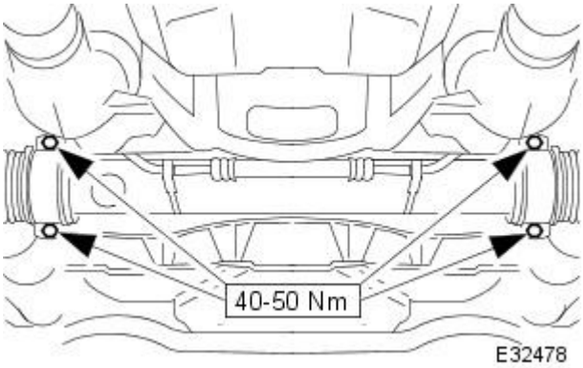

1. Tighten bolts on both mounting brackets.

2. Lower vehicle.

Steering Linkage -

Torques

Component	Nm
Outer Tie Rod End Securing Nut	71-85
Outer Tie Rod End Jam Nut	71-85

Published: 11-May-2011

Steering Linkage - Steering Linkage

Description and Operation

Tie Rods and Joints

Major Components

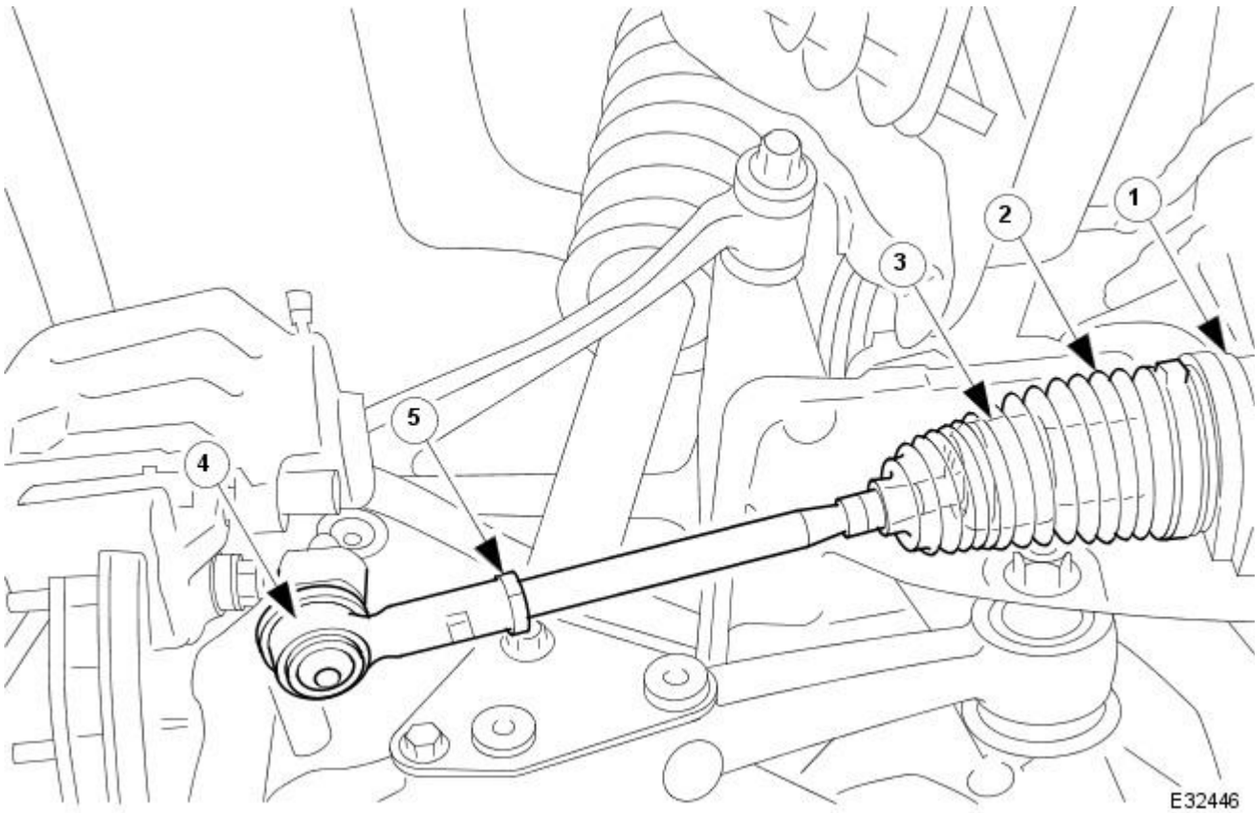

Parts List

Item	Part Number	Description
1	—	Rack Assembly
2	—	Gaiter
3	—	Inner Ball Joint
4	—	Outer Tie Rod End
5	—	Jam Nut

The steering linkage consists of tie rods, inner ball joints and outer tie rod ends and are used to convey the steering movements of the steering rack to the vertical link. The inner ball joints are part of the power steering rack assembly.

Concertina type gaiters are installed between the rack housing and tie rods to retain lubricant and prevent the ingress of foreign matter. They also permit lateral steering movement of the rack and arced movements of the ball joints during suspension operation.

The tie rods are threaded at their ends to accept the ball joints and outer tie rod ends and to provide toe adjustment. Jam nuts are used to secure the tie rod ends to the tie rods.

Steering Column -

Torques

Component	Nm
Steering column to upper bracket retaining nuts	22 - 28
Upper bracket to body retaining screws	22 - 28
Steering column lower bracket retaining nuts	22 - 28
Steering column lower shaft retaining bolts	28 - 34
Steering column lower shaft sliding joint retaining bolts	28 - 34
Upper and lower cowl retaining screws	1.5
Steering wheel retaining bolt	40
Column switchgear to column	4 - 5

Steering Column - Steering Column

Description and Operation

Steering Wheel

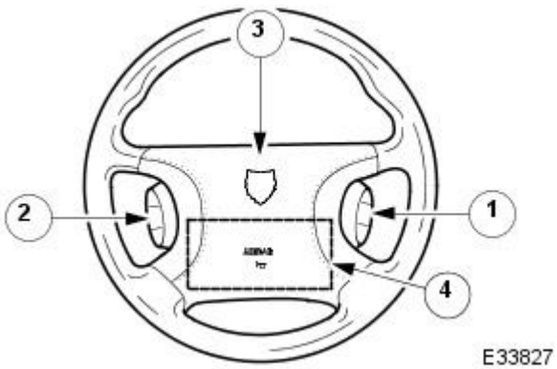

Item	Part Number	Description
1	-	ICE switchpack
2	-	Cruise control switchpack
3	-	Horn pad
4	-	Air bag module location

The steering wheel assembly incorporates:

- the speed control switchpack.
- the in-car entertainment (ICE) switchpack.
- the horn pad.
- the driver air bag module.
  For additional information, refer to: Driver Air Bag Module (501-20B Supplemental Restraint System, Removal and Installation).

ICE Switchpack

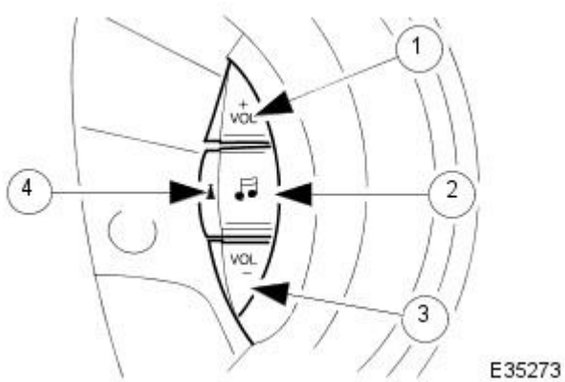

Item	Part Number	Description
1	-	Volume increase control
2	-	ICE select button
3	-	Volume decrease button
4	-	Radio skip cycle button

The in-car entertainment switchpack is installed to the left of the steering wheel center and performs the following functions:

- Increases (+) the volume of the selected audio output.
- Selects the radio, tape or compact disc.
- Decreases (-) the set the volume of the selected audio output.
- Skip cycles through the radio pre-set channels.

Cruise Control Switchpack

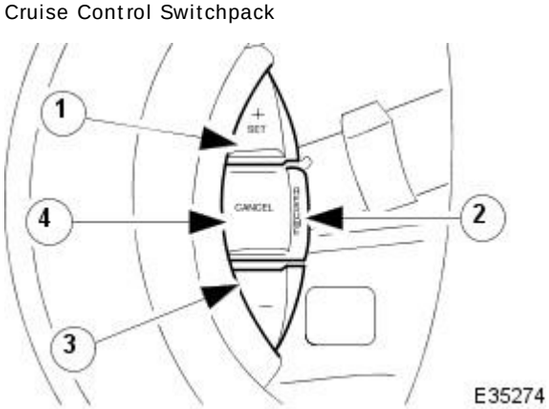

Item	Part Number	Description
1	-	Speed set or increase button
2	-	Speed resume button

3	-	Speed set or decrease button
4	-	Speed cancel button

The cruise control switchpack is installed to the right of the steering wheel center and performs the following functions:

- Sets the desired speed or increases (+) the set speed.
- Resumes the previously set speed.
- Sets the desired speed or or decreases (-) the set speed.
- Cancels the set speed.

Horn and Airbag Location

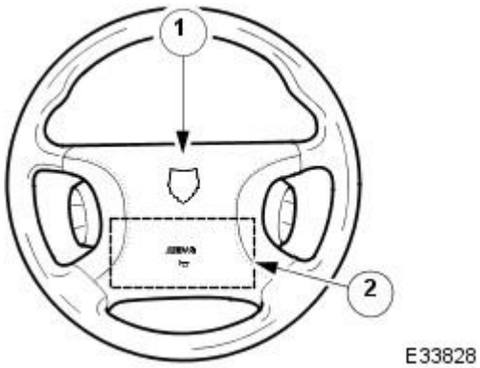

Item	Part Number	Description
1	-	Horn operating pad
2	-	Air bag module location

The horn operating pad is mounted in the central area of the steering wheel.

The driver air bag is mounted below the horn operating pad area, adjacent to the steering wheel hub.

For air bag safety and service information, refer to
For additional information, refer to: Air Bag Supplemental Restraint System (SRS) (501-20B Supplemental Restraint System, Description and Operation).

Upper Steering Column

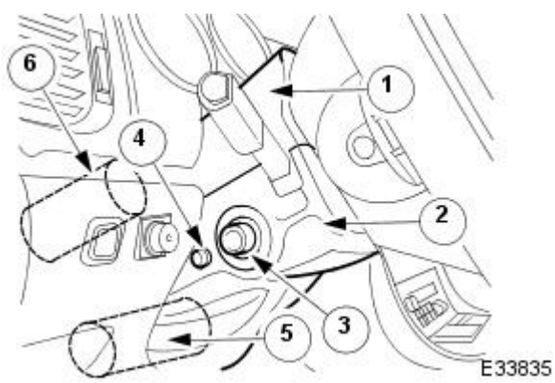

Parts List

Item	Part Number	Description
1	—	Upper cowl
2	—	Lower cowl
3	—	Column adjustment switch
4	—	Dimmer switch
5	—	Tilt motor
6	—	Reach motor

The upper steering column is adjustable for both tilt and reach.

- It is available with either manual or electrical operation of these functions.
- A dimmer switch is installed on the left side of the lower cowl
- Steering column upper and lower cowls are installed for both manual and electric columns.

Manual Adjustment

When a manual adjustment column is installed:

- the cable operated reach adjustment has approximately sixteen latched positions.
- the desired position is fixed by a rack and wedge.
- tilt variations are stepped at approximately 3° intervals.
- four latched positions are available.
- the uppermost position is unlatched.
- from the uppermost position the column may be pulled down to engage the first detent without using the tilt lever.

Serviceable Parts

- The only serviceable part is the Bowden wire and lever assembly.

Electric Adjustment

When an electrically adjusted column is installed:

- If the ignition key is removed and the adjustment switch is in the 'AUTO' position, the column will tilt away for entry and exit.
- A column adjustment switch is installed on the left side of the lower cowl.

Serviceable Parts

- Ignition switch assembly.
- Gearshift interlock solenoid.
- Tilt motor assembly.
- Reach motor assembly.

Lower Steering Column

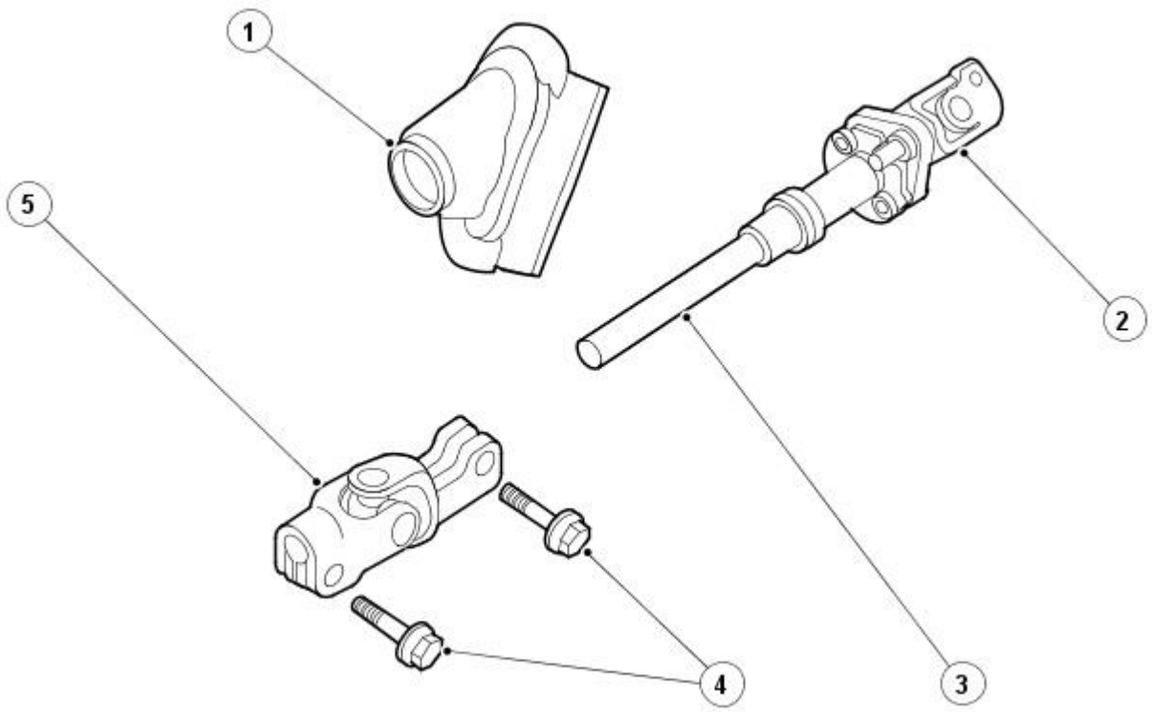

E41851

Item	Part Number	Description
1	-	Boot
2	-	Universal joint to upper column
3	-	Lower steering column shaft
4	-	Retaining bolts
5	-	Universal joint to steering rack

The lower steering column:

- is a handed assembly.
- incorporates a column to toeboard seal which comprises a rolling element having two, low friction, PTFE rings. The rolling element locates in a rubber boot which seals to the toeboard.
- has a lower universal joint connecting the lower column to the steering rack.
- has an upper universal joint connecting the lower column to the upper column.
- has a NVH damper incorporated into the upper universal joint assembly.
- may be installed in any orientation on the universal joint splines.
- requires no setting or adjustment.
- has no serviceable components.

It is essential to disconnect the lower column from the steering rack before removing the engine or front suspension crossbeam.

Published: 11-May-2011

Steering Column - Steering Column

Diagnosis and Testing

For additional information, refer to Section 211-00 Steering System - General Information.

Steering Column - Steering Column

Removal and Installation

Removal

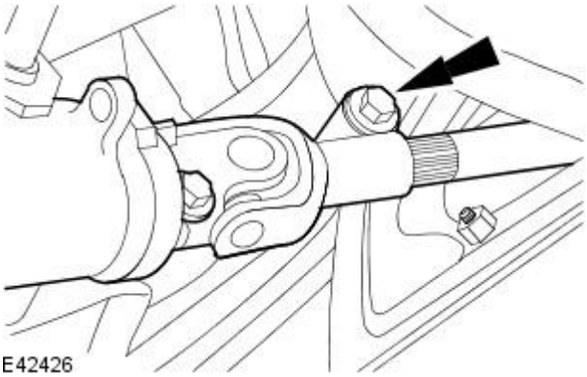

1. Raise and support the vehicle.
   For additional information, refer to Section 100-02 Jacking and Lifting.
2. Detach the steering column lower shaft.
3. Lower the vehicle.
4. Remove the steering wheel.
   For additional information, refer to Steering Wheel - in this section.
5. Remove the steering column lower shroud.
   For additional information, refer to Section 501-12 Instrument Panel and Console.
6. Remove the steering column upper shroud.

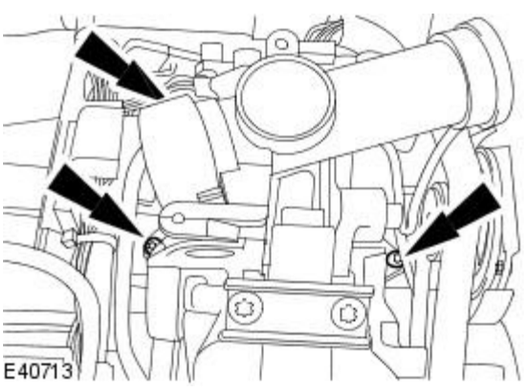

7. Remove the instrument panel lower trim panel.
   For additional information, refer to Section 501-12 Instrument Panel and Console.
8. Remove and discard the steering column lower shaft retaining bolt.

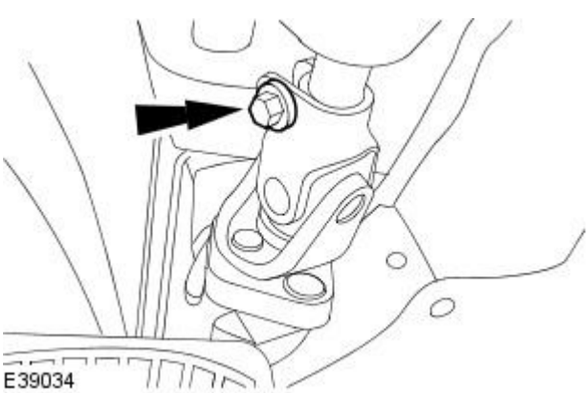

9. Detach the steering column lower shaft.

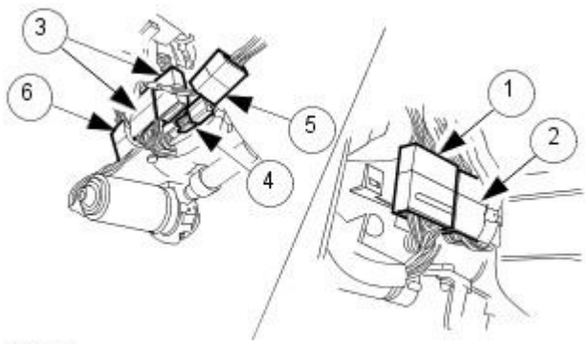

10. Disconnect the steering column electrical connectors.

1. Disconnect the washer multifunction switch electrical connector.
2. Disconnect the audible warning speaker electrical connector.
3. Disconnect the turn signal lamp electrical connector.
4. Disconnect the air bag wiring harness electrical connector.
5. Disconnect the ignition switch electrical connector.
6. Disconnect the tilt motor electrical connector.

11. Remove and discard the wiring harness tie straps.

12. Disconnect the steering column key lock actuator and passive anti-theft system (PATS) transceiver wiring harness electrical connectors.

1. Disconnect the steering column key lock actuator and passive anti-theft system (PATS) transceiver wiring harness electrical connector.
2. Disconnect the steering column key lock actuator and passive anti-theft system (PATS) transceiver wiring harness electrical connector.

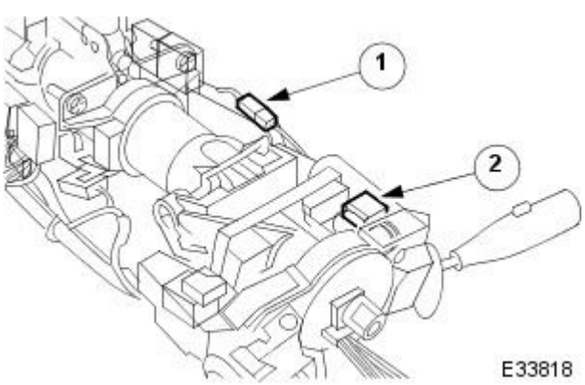

13. Remove the steering column lower retaining nuts.

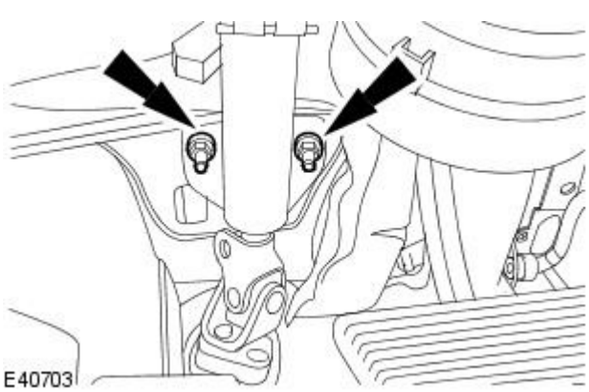

14. NOTE: The steering column retaining bolts remain in the steering column.

Remove the steering column.

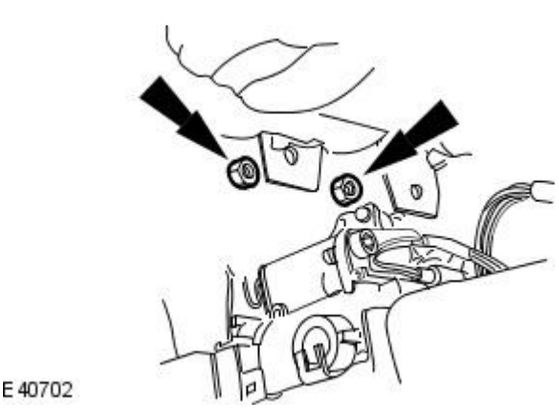

Installation

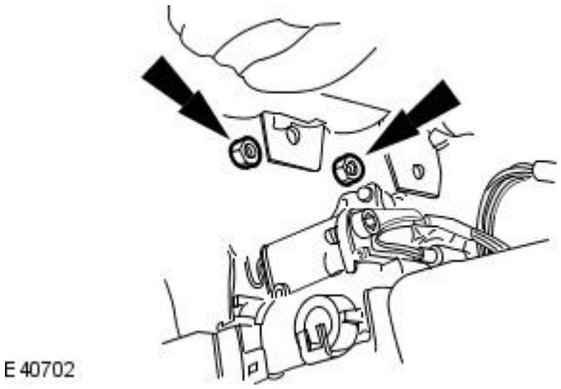

1. NOTE: Do not fully tighten the steering column upper retaining nuts.

Install the steering column.

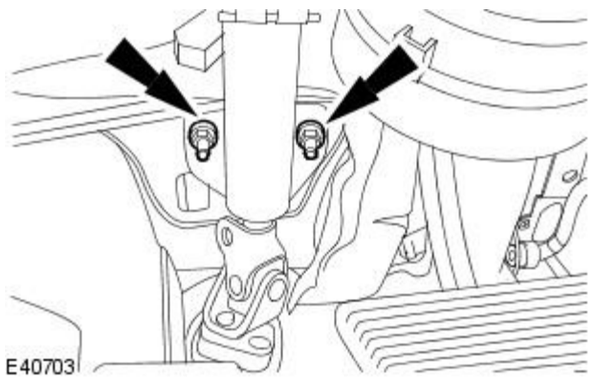

2. Install the steering column lower mounting bracket retaining nuts.

- Tighten to 22-28 Nm.

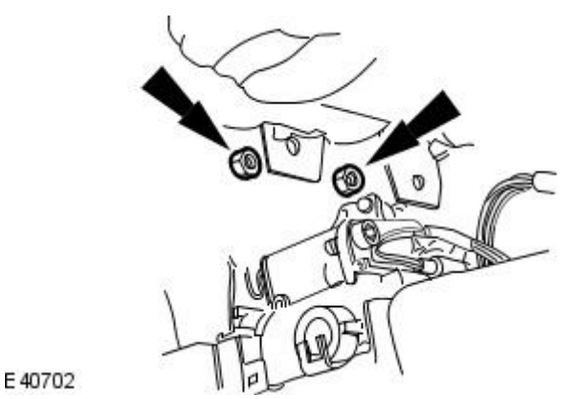

3. Tighten to 22-28 Nm.

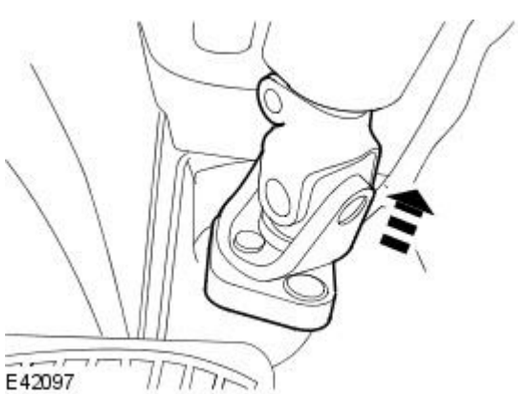

4. CAUTIONS:

Make sure the steering column lower shaft is correctly installed to the steering column shaft splines.

Make sure the steering column lower shaft rolling element is correctly installed to the boot.

Attach the steering column lower shaft.

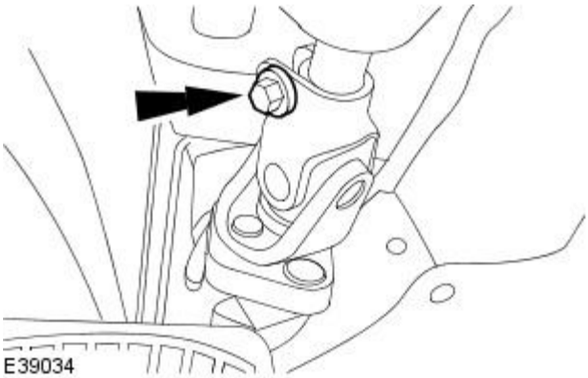

5. WARNING: Install a new steering column lower shaft retaining bolt. Failure to follow this instruction, may result in personal injury.

CAUTION: Make sure the steering column lower shaft is correctly installed to the steering column shaft splines.

Tighten to 25 Nm.

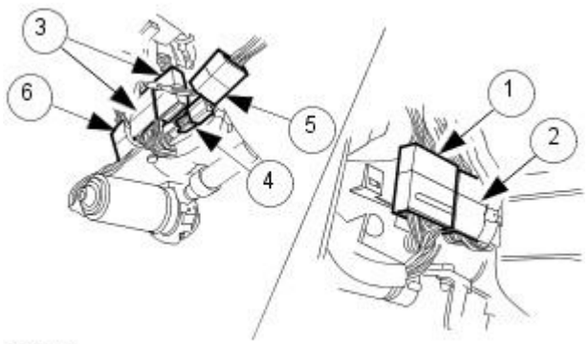

6. Connect the steering column electrical connectors.

1. Connect the washer multifunction switch electrical connector.
2. Connect the audible warning speaker electrical connector.
3. Connect the turn signal lamp electrical connector.
4. Connect the air bag wiring harness electrical connector.
5. Connect the ignition switch electrical connector.
6. Connect the tilt motor electrical connector.

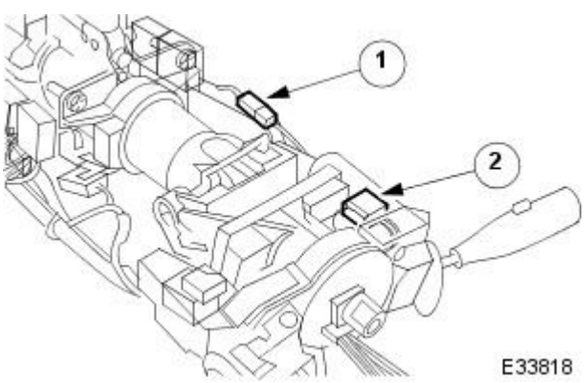

7. Connect the steering column key lock actuator and passive anti-theft system (PATS) transceiver wiring harness electrical connectors.

1. Connect the steering column key lock actuator and passive anti-theft system (PATS) transceiver wiring harness electrical connector.
2. Connect the steering column key lock actuator and passive anti-theft system (PATS) transceiver wiring harness electrical connector.

8. Install new wiring harness tie straps.

9. Install the instrument panel lower trim panel.
For additional information, refer to Section 501-12 Instrument Panel and Console.

10. Install the steering column upper shroud.

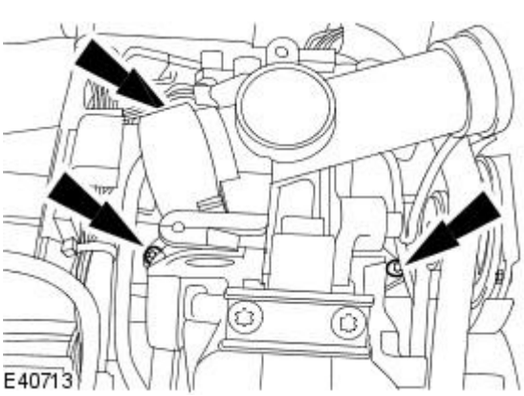

11. Install the steering column lower shroud.
For additional information, refer to Section 501-12 Instrument Panel and Console.

12. Install the steering wheel.
For additional information, refer to Steering Wheel - in this section.

13. Raise the vehicle.

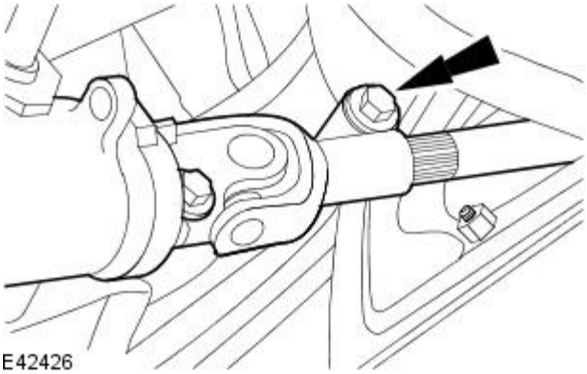

14. WARNING: Install a new steering column lower shaft retaining bolt. Failure to follow this instruction, may result in personal injury.

Tighten to 25 Nm.

15. Lower the vehicle.

Steering Column - Steering Column Control Relay

Removal and Installation

Removal

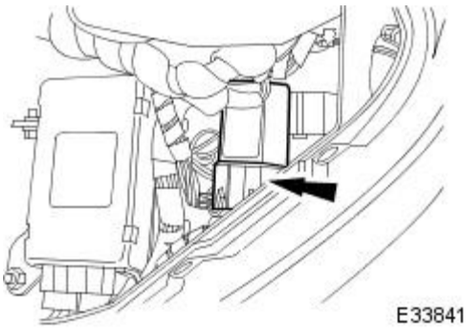

1. Remove the driver's side dash liner; refer to Section 501-05.
2. Remove the servotronic relay base from the mounting bracket.

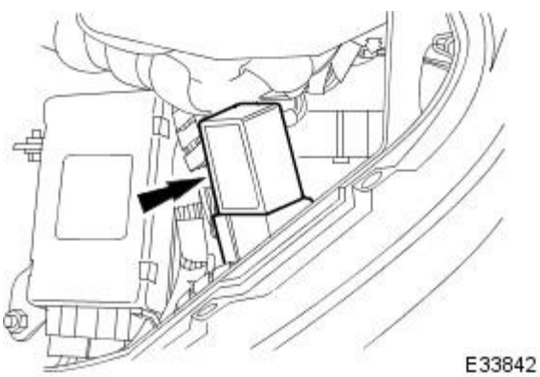

3. Remove the relay from the base.

Installation

1. Installation is a reversal of the removal procedure

Steering Column - Steering Column Lower Shaft

Removal and Installation

Removal

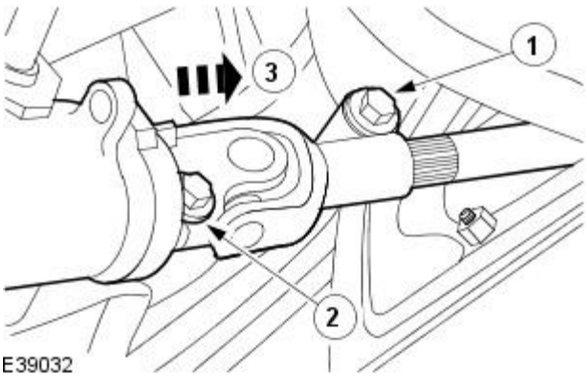

1. Raise and support the vehicle.

2. Detach the steering column lower shaft.

1. Loosen the steering column lower shaft sliding joint retaining bolt.
2. Remove and discard the steering column lower shaft retaining bolt.
3. Detach the steering column lower shaft.

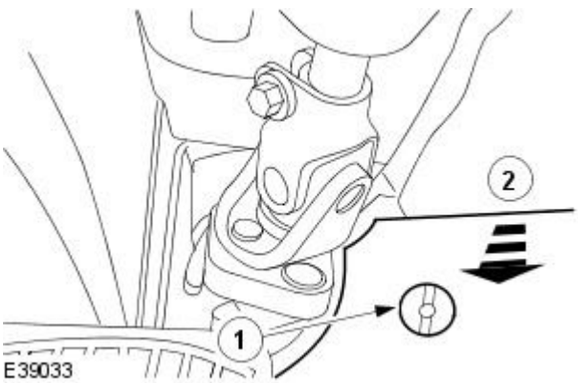

3. Lower the vehicle.

4. Reposition the floor covering.

1. Remove the retaining clip.
2. Reposition the floor covering.

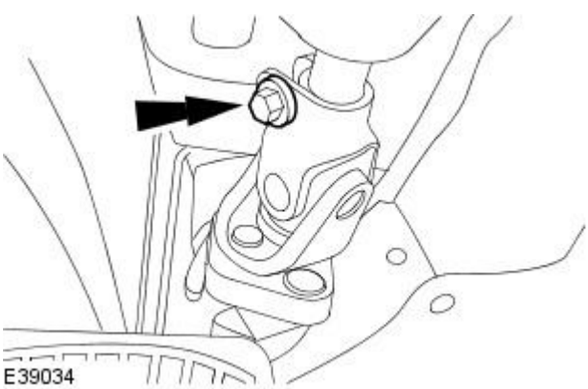

5. Remove and discard the steering column lower shaft retaining bolt.

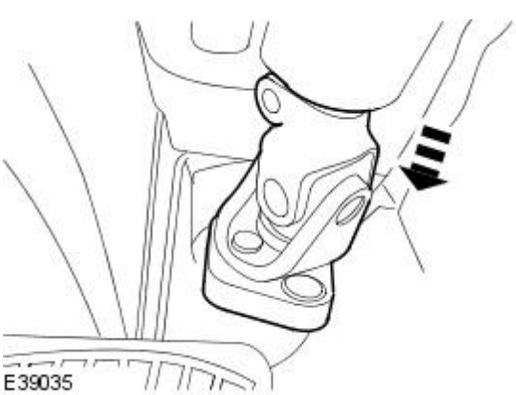

6. Detach the steering column lower shaft.

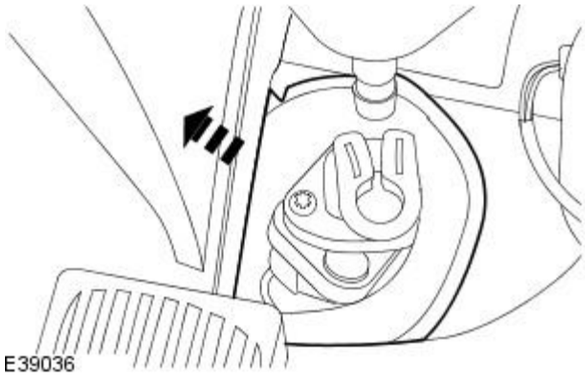

7. Remove the steering column lower shaft.

- Detach the boot.

Installation

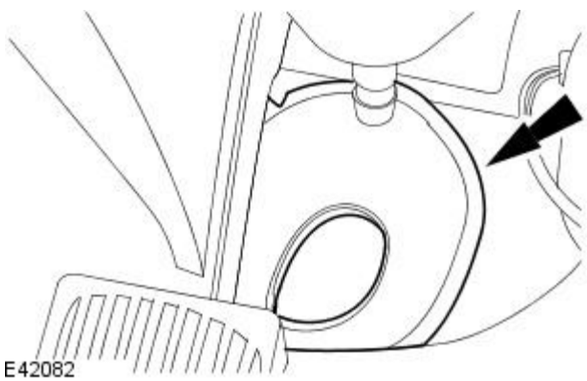

1. CAUTION: Make sure the boot is fully seated at the top and bottom.

Attach the boot.

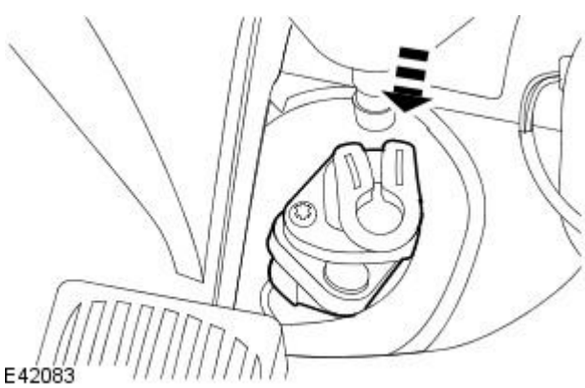

2. CAUTIONS:

Make sure the steering column lower shaft rolling element is fully seated into the boot.

Make sure the boot is fully seated at the top and bottom.

Install the steering column lower shaft.

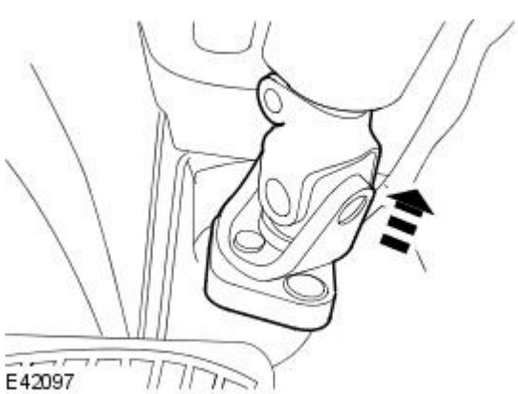

3. CAUTIONS:

Make sure the steering column lower shaft is fully installed to the steering column shaft splines.

Make sure the steering column lower shaft rolling element is fully seated into the boot.

Attach the steering column lower shaft.

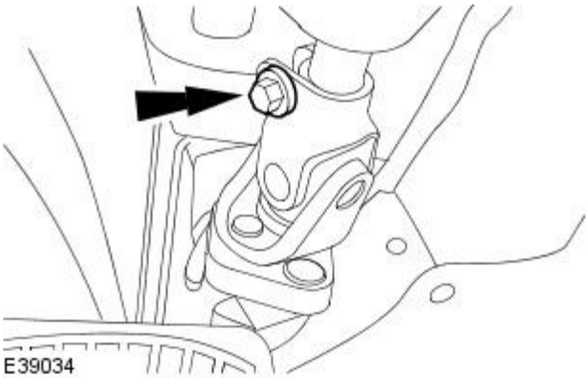

4. WARNING: Install a new steering column lower shaft retaining bolt. Failure to follow this instruction, may result in personal injury.

CAUTION: Make sure the steering column lower shaft is fully installed on the steering column shaft splines.

Install the steering column lower shaft retaining bolt.

- Tighten to 28 - 34 Nm.

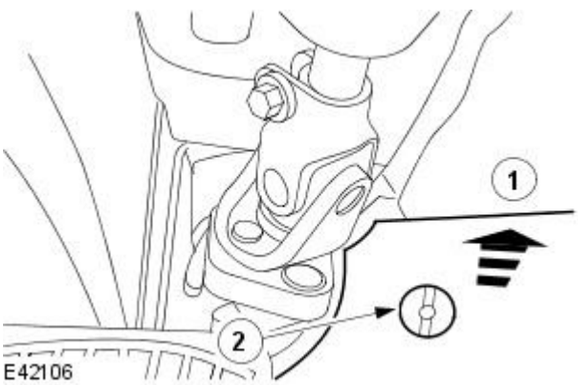

5. Install the floor covering retaining clip.

1. Reposition the floor covering.
2. Install the floor covering retaining clip.

6. Raise the vehicle.

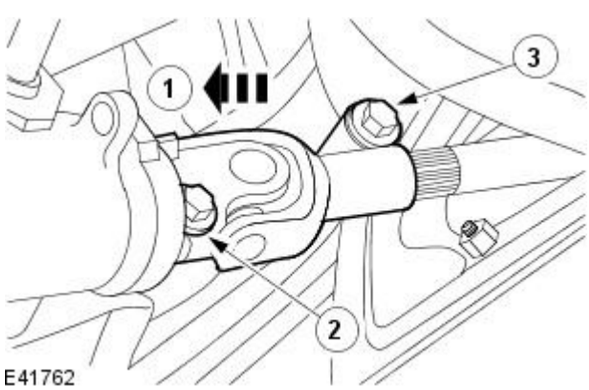

7. WARNING: Install a new steering column lower shaft retaining bolt. Failure to follow this instruction, may result in personal injury.

Attach the steering column lower shaft.

1. Attach the steering column lower shaft.
2. Install the steering column lower shaft retaining bolt.
   1. Tighten to 28 - 34 Nm.
3. Tighten to 28 - 34 Nm.

Steering Column - Steering Wheel

Removal and Installation

Removal

1. Remove the driver air bag module. For additional information, refer toSection 501-20A Safety Belt SystemSection 501-20B Supplemental Restraint System.
2. Centralize the steering wheel.

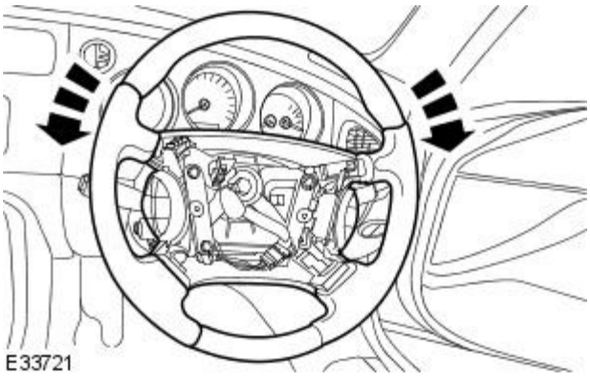

3. Detach and disconnect the switchpacks electrical connector.

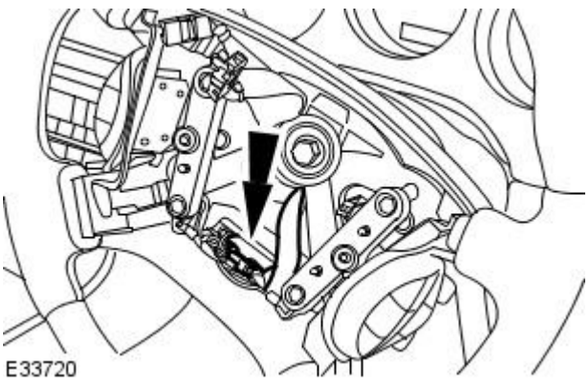

4. Detach the steering wheel.
   - Remove and discard the steering wheel retaining bolt.

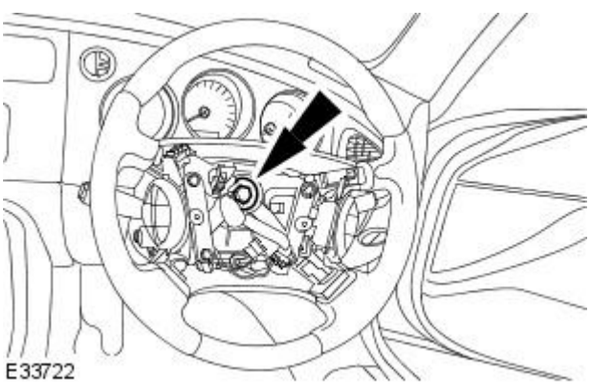

5. Remove the steering wheel.
   1. Guide the wiring harnesses through the steering wheel aperture.
   2. Remove the steering wheel.

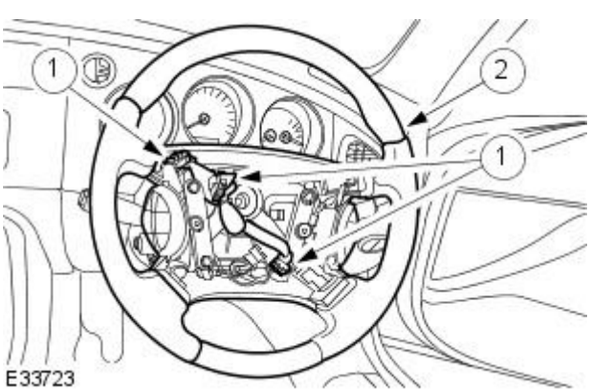

Installation

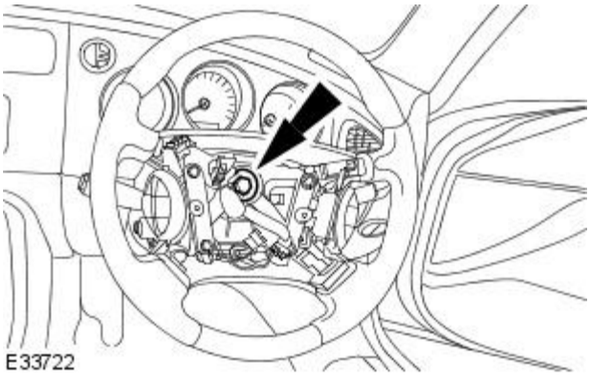

1. NOTE: Install a new steering wheel retaining bolt.

To install, reverse the removal procedure.

- Tighten to 40 Nm.

Steering Column - Telescopic Motor

Removal and Installation

Removal

1. Disconnect the battery ground cable.
   For additional information, refer to: Battery Disconnect and Connect (414-01 Battery, Mounting and Cables, General Procedures).
2. Slacken and remove the two screws securing the lower underscuttle to the fascia panel cross-member.

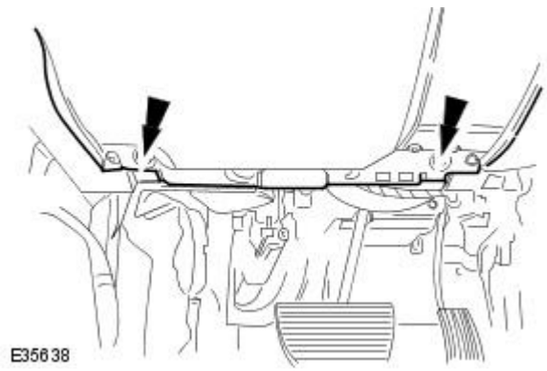

3. Detach the underscuttle upper fasteners from their locations in the fascia panel.

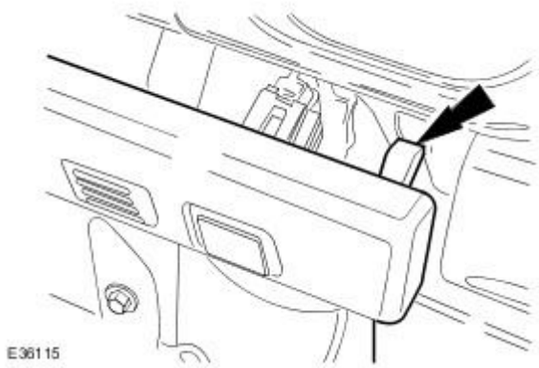

4. Position the underscuttle rearwards for access.
5. Disconnect the electrical connectors and reposition underscuttle.
   1. Disconnect air conditioning aspirator electrical connector.
   2. Disconnect valet switch electrical connector.

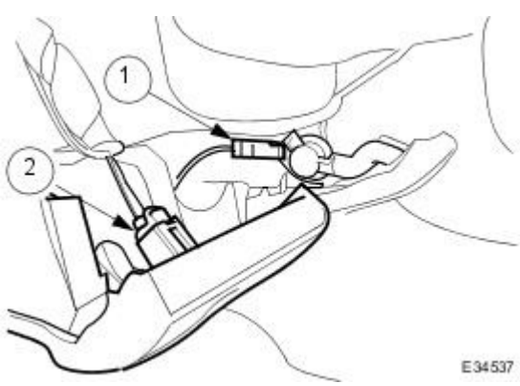

6. Remove the steering column lower shroud.
   For additional information, refer to: Steering Column Lower Shroud (501-12 Instrument Panel and Console, Removal and Installation).
7. Remove the steering column upper shroud.

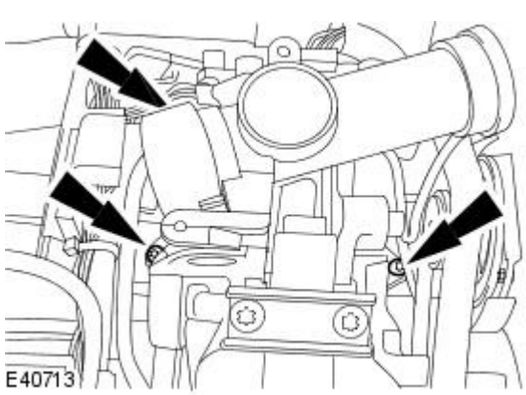

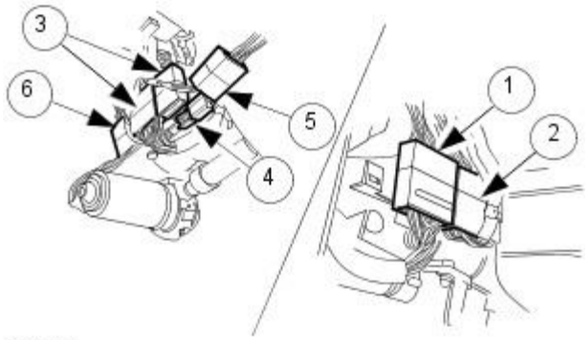

E36468

8. Disconnect the steering column electrical connectors.

1. Disconnect the washer multifunction switch electrical connector.
2. Disconnect the audible warning speaker electrical connector.
3. Disconnect the turn signal lamp electrical connector.
4. Disconnect the air bag wiring harness electrical connector.
5. Disconnect the ignition switch electrical connector.
6. Disconnect the tilt motor electrical connector.

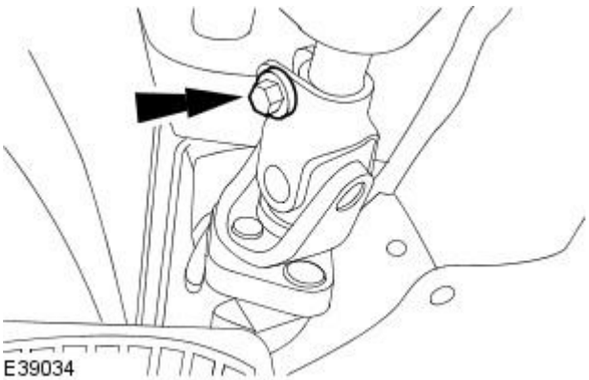
E39034

9. Remove and discard the steering column lower shaft retaining bolt.

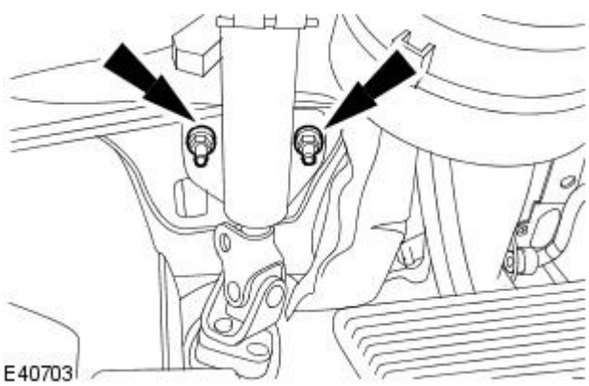
E40703

10. Remove the steering column lower retaining nuts.

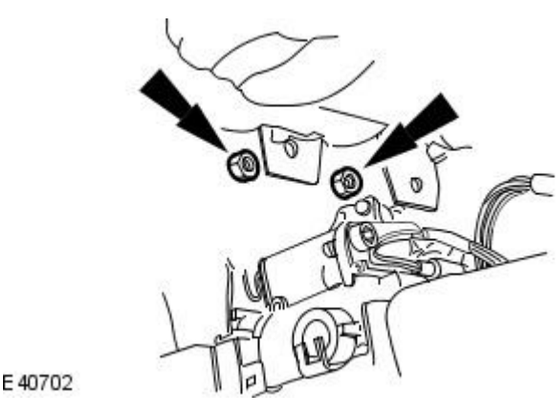
E40702

11. NOTE: The steering column retaining bolts remain in the steering column.

Remove the steering column upper retaining nuts.

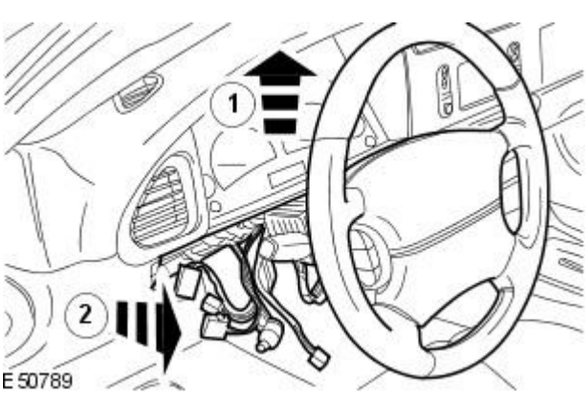

E50789

12. NOTE: Do not remove the steering column from the lower shaft.

Detach the steering column from the retaining brackets.

1. Lift the steering wheel end of the steering column to release the steering column lower retaining bracket.
2. Pull the steering column to release the steering column upper retaining bracket.

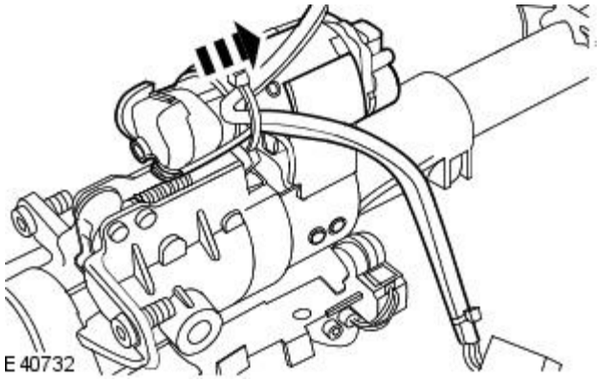

13. Remove the telescopic motor (steering column shown removed for clarity).

Installation

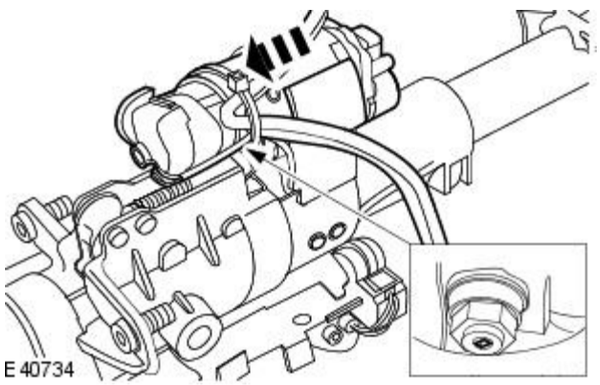

1. NOTE: Make sure the drive cable is correctly installed to the steering column.

Install the telescopic motor (steering column shown removed for clarity).

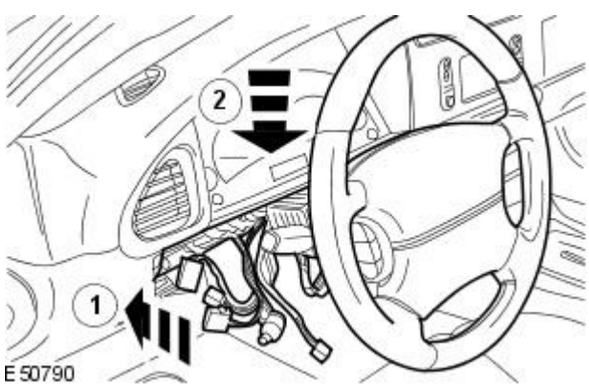

2. Attach the steering column to the retaining brackets.

1. Push the steering column on to the steering column upper retaining bracket.
2. Pull down the steering wheel end of the steering column to install the steering column to the lower retaining bracket.

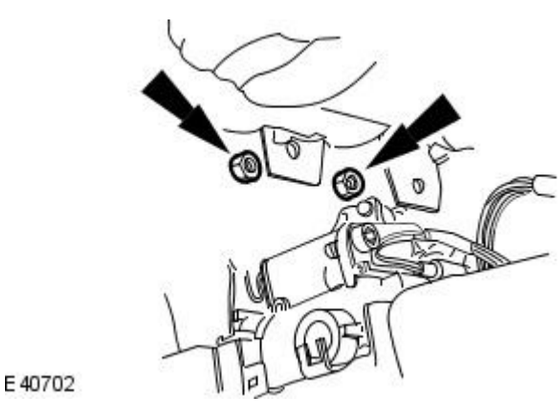

3. NOTE: Do not fully tighten the steering column upper retaining nuts.

Install the steering column upper retaining nuts.

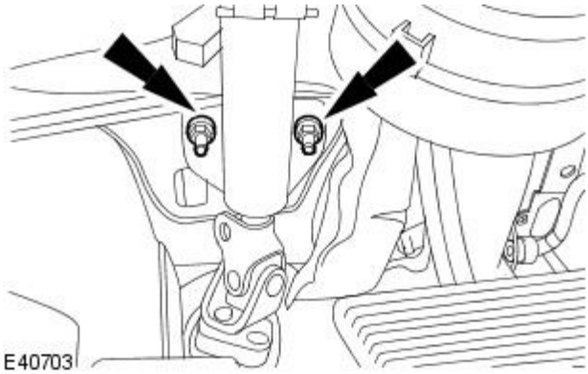

4. Install the steering column lower retaining nuts.

- Tighten to 22-28 Nm.

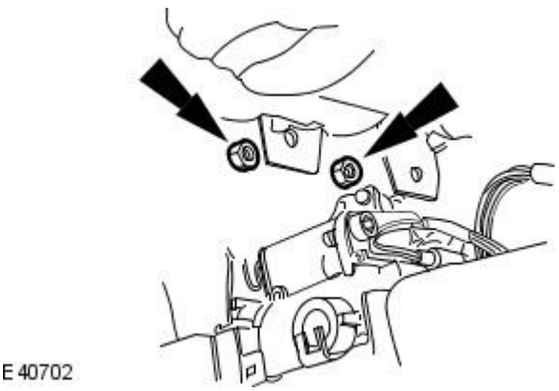

5. Tighten to 22-28 Nm.

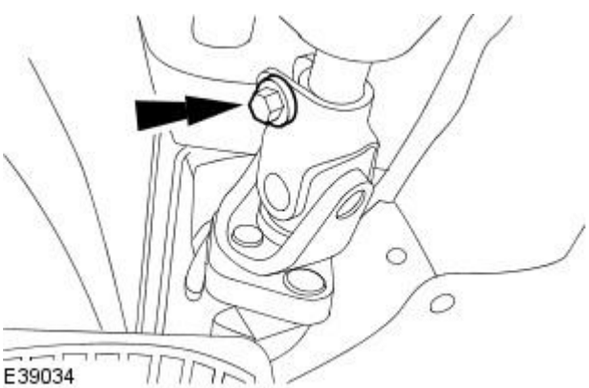

6. WARNING: Install a new steering column lower shaft retaining bolt. Failure to follow this instruction, may result in personal injury.

Install the steering column lower shaft retaining bolt.

- Tighten to 25 Nm.

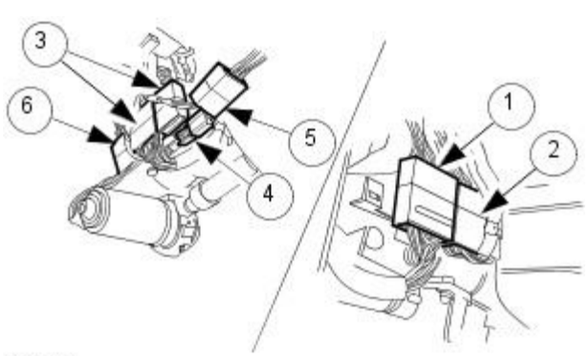

7. Connect the steering column electrical connectors.

1. Connect the washer multifunction switch electrical connector.
2. Connect the audible warning speaker electrical connector.
3. Connect the turn signal lamp electrical connector.
4. Connect the air bag wiring harness electrical connector.
5. Connect the ignition switch electrical connector.
6. Connect the tilt motor electrical connector.

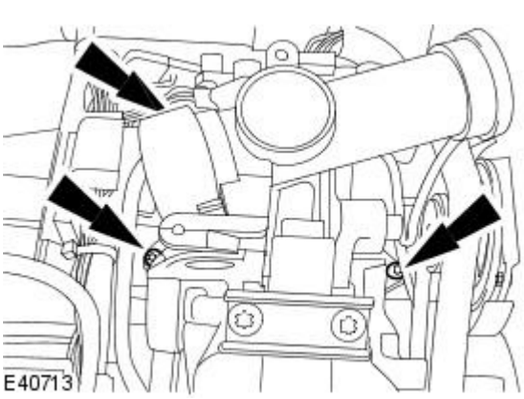

8. Install the steering column upper shroud.

9. Install the steering column lower shroud.
For additional information, refer to: Steering Column Lower Shroud (501-12 Instrument Panel and Console, Removal and Installation).

10. Connect the electrical connectors and reposition underscuttle.

1. Connect air conditioning aspirator electrical connector.
2. Connect valet switch electrical connector.

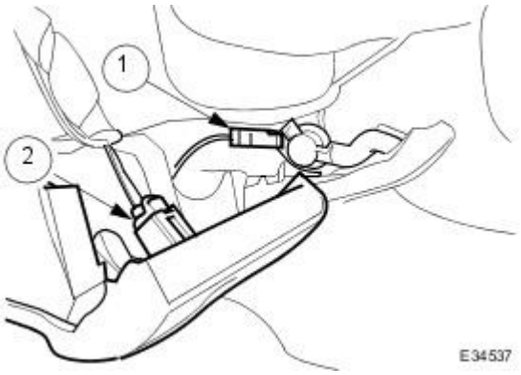

11. Attach the underscuttle upper fasteners to the fascia panel.

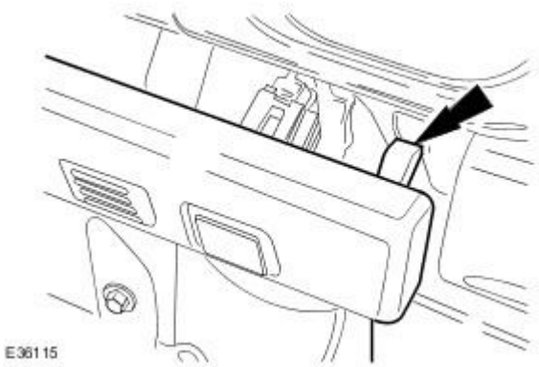

12. Install the two screws securing the lower underscuttle to the fascia panel cross-member.

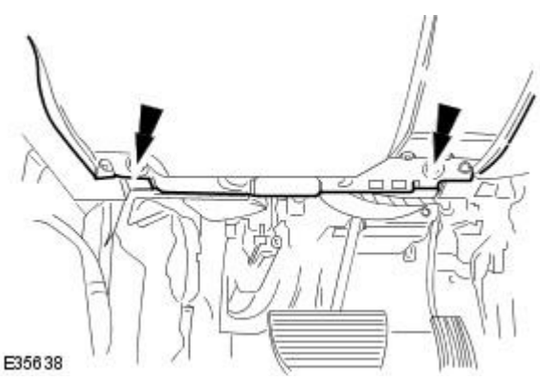

13. Connect the battery ground cable.
For additional information, refer to: Battery Connect (414-01 Battery, Mounting and Cables, General Procedures).

Steering Column - Tilt Motor

Removal and Installation

Removal

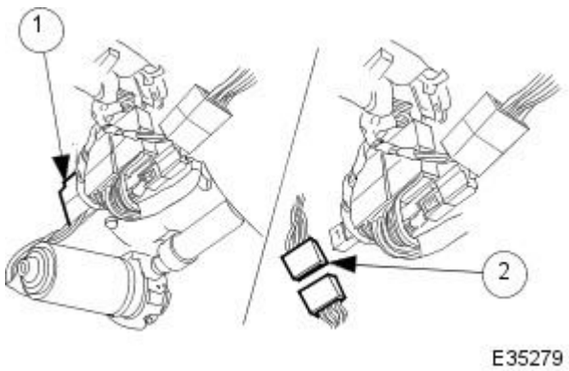

1. Remove the instrument panel lower trim panel.
   For additional information, refer to: Instrument Panel Lower Trim Panel (501-12 Instrument Panel and Console, Removal and Installation).
2. Disconnect the tilt motor potentiometer electrical connector.
   1. Detach the electrical connector from the mounting bracket.
   2. Disconnect the electrical connector.

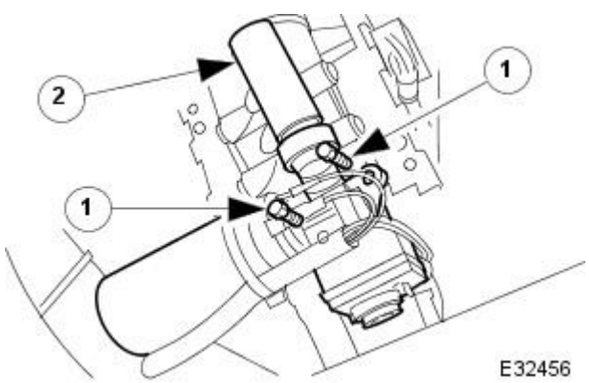

3. Remove the tilt motor from the steering column.
   1. Remove the tilt motor retaining bolts.
   2. Remove the tilt motor from the steering column.
4. Remove and discard the tilt motor wiring harness tie straps.

Installation

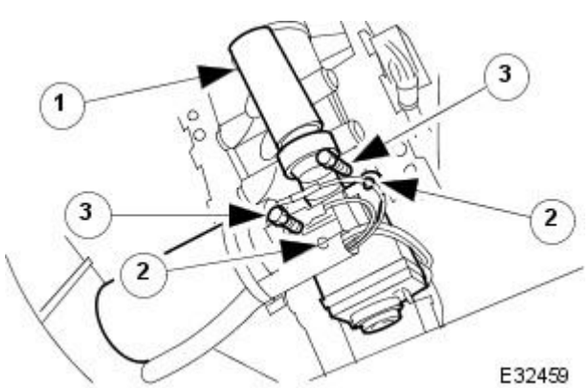

1. Connect the tilt motor harness electrical connectors.
2. Install the a new tilt motor harness tie straps.
3. Install the new tilt motor to the steering column.
   1. Align the tilt motor to the steering column.
   2. Align the motor retaining bolt holes.
   3. Install the new tilt motor retaining bolts.
   - Tighten to 4-5 Nm

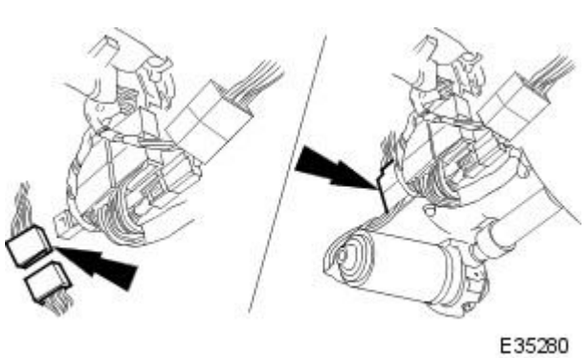

4. Connect the tilt motor potentiometer electrical connector and attach the electrical connector to the mount bracket.
5. Install the instrument panel lower trim panel.
   For additional information, refer to: Instrument Panel Lower Trim Panel (501-12 Instrument Panel and Console, Removal and Installation).

Steering Column Switches -

Torques

Component	Nm
Switchgear Securing Screws	4-5
Steering Column Upper Cowl	1,5 Nominal
Steering Column Lower Cowl	1,5 Nominal

Steering Column Switches - Steering Column Switches

Description and Operation

Ignition Switch

The key-operated ignition switch is located on the right hand side of the steering column and has four positions.

Position 'O'.

E33538

OFF. The only position in which the key can be inserted or removed. With the key removed, the steering lock engages.

Position 'I'.

E33539

AUXILIARY. Certain circuits, i.e. radio and windows, can be operated without switching on the ignition.

Position 'II'.

E33541

IGNITION. All circuits, except the starter motor, are activated. The key remains in this position when driving.

Position 'III'.

E33542

START. The starter operates for as long as the key is held in this position, against the spring pressure. If the engine fails to start, the key must be returned to position 'I' before another start is attempted.

Lighting Switch

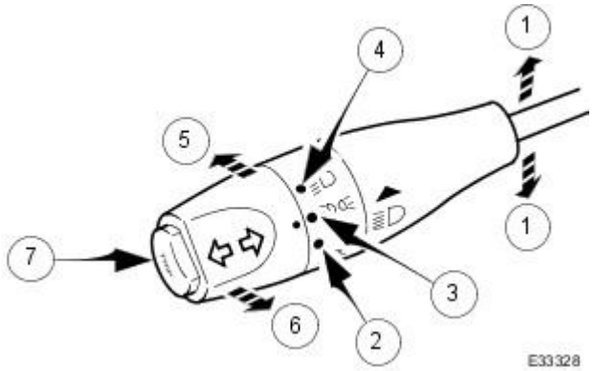

Item	Description
1	Direction Indicators
2	All lamps Off
3	Sidelamps
4	Headlamps
5	Headlamp Main Beam
6	Main Beam Flash
7	Message Center Function Button

The left hand column switch controls the following functions:

Direction Indicators.

The direction indicators operate when the ignition switch is in position 'II'.

- To indicate for a right or left turn, move the column switch stalk up or down respectively, until the switch latches in position.
- An audible ticking and a flashing green warning lamp on the instrument cluster indicates that the direction indicators are operating.
- S Upon completion of the turn, the switch automatically returns to the center position and the indicators cancel.
- If an indicator bulb fails, the warning lamp and ticking operate at twice the normal rate.

Sidelamps and Dipped Headlamps.

These are controlled by a rotary collar on the switch stalk as follows:

Off Position.

With the rotary collar in the 'OFF' position:

- All exterior lamps are switched 'OFF'.

Sidelamps Position.

With the rotary collar in the sidelamps position:

- The front sidelamps, tail, license plate and any other lamps required by local legislation are switched 'ON'.
- The sidelamps tell-tale lamp will be 'ON'.

Headlamps Position.

With the rotary collar in the headlamps position:

- The headlamps are switched 'ON' (with the ignition switch in position 'II') in addition to the lamps switched on in the sidelamps position.

• NOTE: If the ignition is switched to position 'O' with the rotary collar in the Headlamps 'ON' position:

- The sidelamps, tail and license plate lamps will stay on, but the headlamps will switch 'OFF'.
- When the ignition is switched to position 'II', they will come 'ON' automatically.

Headlamp Main Beam Position.

To select the main beam position:

- • NOTE: The main beam only operates with the dipped headlamps switched 'ON'.

  Push the column switch stalk away from the steering wheel.

Main Beam Flash.

To flash the main beam:

- Pull the switch stalk towards the steering wheel.
- It may be flashed with the ignition switch in any position and will remain 'ON' for as long as the switch is held.
- Whenever the main beam is in operation, a blue warning lamp on the instrument cluster comes 'ON'.

Message Center Function Button.

The message center function button is located in the end of the switch stalk.

- Select the functions by repeatedly pressing the function button.
- The first press will switch from the odometer reading to the trip computer.
- Further presses will cycle through the trip computer data in sequence, until the odometer reading is displayed again.

Wiper and Washer Switch

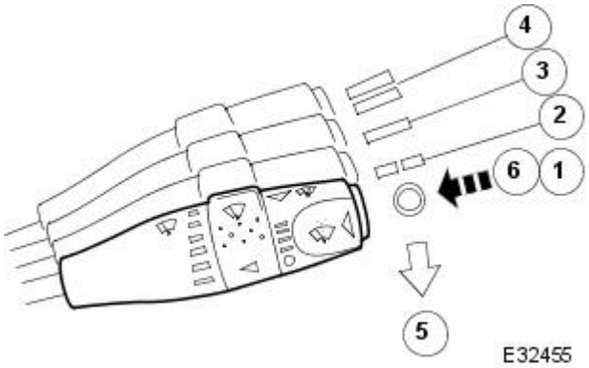

Item	Description
1	Wipers Off
2	Intermittent Wipe
3	Normal Speed Wiper Operation
4	High Speed Wiper Operation
5	Flick Wipe Facility
6	Programmed Wash/Wipe Button

The right hand column switch controls the following functions with the ignition in position 'II':

Position 'O'. Wipers Off.

With the wipers 'Off' position selected:

- The windscreen wipers are stationary and in the parked position.

Position 'I'. Intermittent Wipe.

With intermittent wipe selected:

- The collar can be rotated to vary the delay between wipes.
- Turn the collar counter-clockwise to increase the time delay.
- Six collar positions are available and will vary the delay from two seconds to twenty seconds.

Position 'II'. Normal Wiper Operation.

With normal wiper operation position selected:

- The wipers operate continuously at normal speed.

Position 'III'. High Speed Wiper Operation.

With the high speed wiper position selected:

- The wipers will operate continuously at maximum speed.

Flick Wipe.

To obtain a flick wipe:

- Pull the switch stalk towards the steering wheel for a single slow speed wipe.
- With the switch held in this position, the wiper will operate continuously at slow speed until released.

Programmed Wash/Wipe.

To obtain the wash/wipe program:

- Press the button on the end of the switch stalk.
- A short press will briefly operate the washers and the wipers will complete three wipes.
- If the button is held depressed, the washers and wipers will operate continuously for up to twenty seconds.
- S When released, the washers will stop and the wipers complete a further three wipes.
- The drip wipe function will perform a single wiper sweep four seconds after the wipe/wash sequence has finished.
- If the 'Washer fluid low' message is displayed and the wash/wipe is selected, the wipers will operate but not the washers.

Steering Column Switches - Ignition Switch

Removal and Installation

Removal

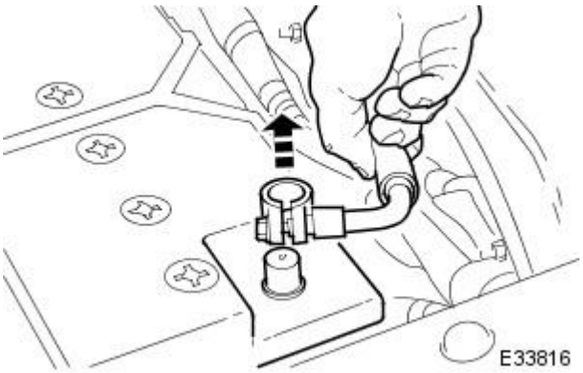

1. Remove the battery cover.

2. WARNING: WAIT AT LEAST ONE MINUTE BEFORE STARTING WORK, BECAUSE THE AIR BAG IS EQUIPPED WITH A BACK-UP POWER SOURCE AND MAY BE INADVERTENTLY DEPLOYED.

Disconnect the battery ground cable.

3. Remove the underscuttle; refer to Section 501-05.

4. Remove the steering column lower cowl; refer to Section 501-05.

5. Release the ignition switch multiplug from the mounting bracket and disconnect it.

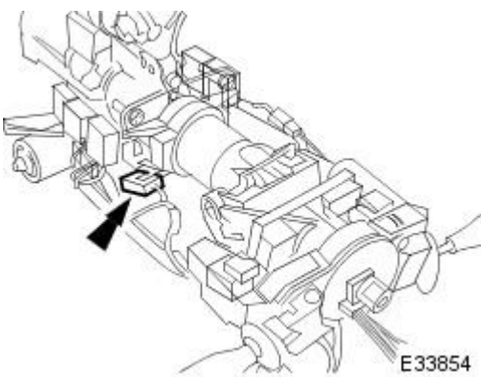

6. Remove the ignition switch from the lock assembly.

1. Unscrew the ignition switch securing screws.
2. Remove the ignition switch from the lock assembly.

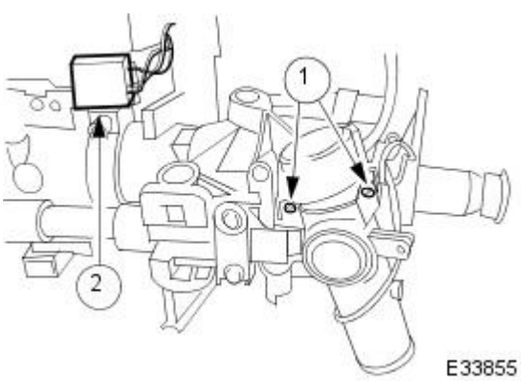

Installation

1. Install the ignition switch on the lock assembly.

1. Fully seat the ignition switch on the lock assembly.
2. Install and tighten the ignition switch securing screws.

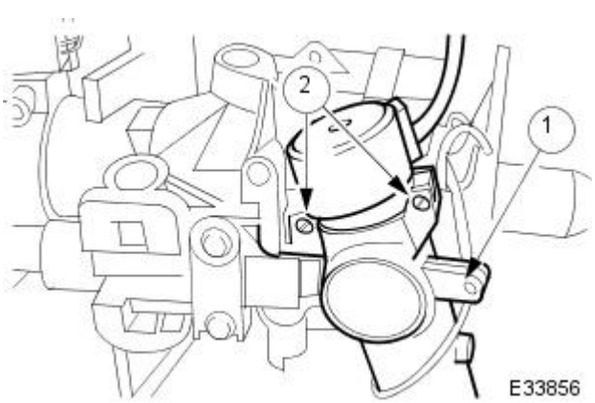

2. Reconnect the ignition switch multiplug and locate it in the mounting bracket.

3. Install the steering column lower cowl; refer to Section 501-05.

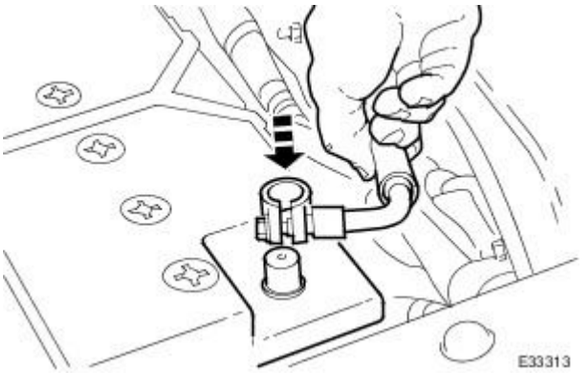

4. Install the underscuttle; refer to Section 501-05.

5. Reconnect the battery ground cable.

6. Install the battery cover.

Published: 11-May-2011

Steering Column Switches - Steering Column Control Switch

Removal and Installation

Removal

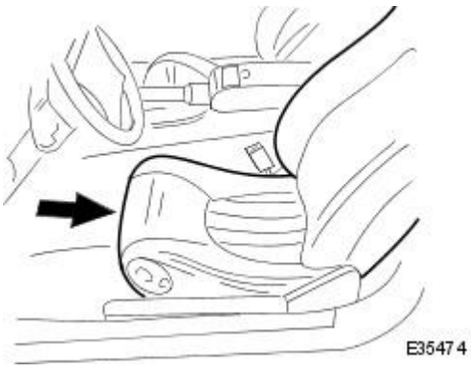

1. Power the driver's seat to the lowest and most rearward position.

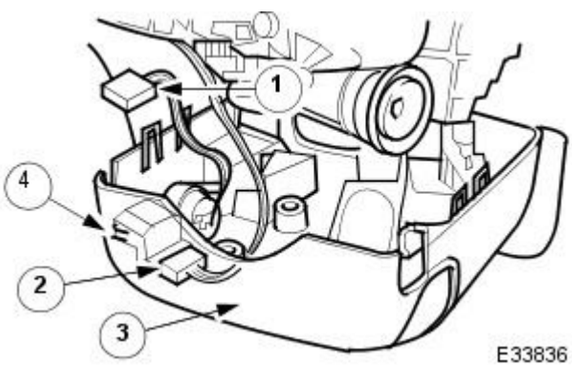

2. Remove the steering column lower cowl; refer to Section 501-05.

3. Remove the column adjustment switch.

1. Disconnect the rheostat multiplug.
2. Disconnect the column switch harness multiplug.
3. Remove the cowl and switch assembly.
4. Release the column switch retaining tangs and withdraw the switch.

Installation

1. Installation is the reverse of the removal procedure.

Steering Column Switches - Steering Column Lock Module

Removal and Installation

Removal

1. Remove the underscuttle; refer to Section 501-05.
2. Remove the steering column lower cowl; refer to Section 501-05.
3. Remove the steering column upper cowl; refer to Section 501-05.
4. Remove the ignition key.

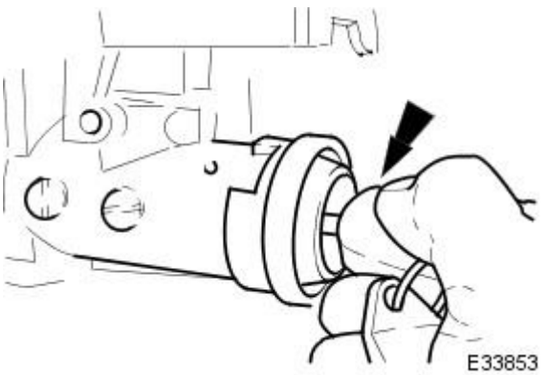

5. Remove the battery cover.

6. WARNING: WAIT AT LEAST ONE MINUTE BEFORE STARTING WORK, BECAUSE THE AIR BAG IS EQUIPPED WITH A BACK-UP POWER SOURCE AND MAY BE INADVERTENTLY DEPLOYED.

   Disconnect the battery ground cable.

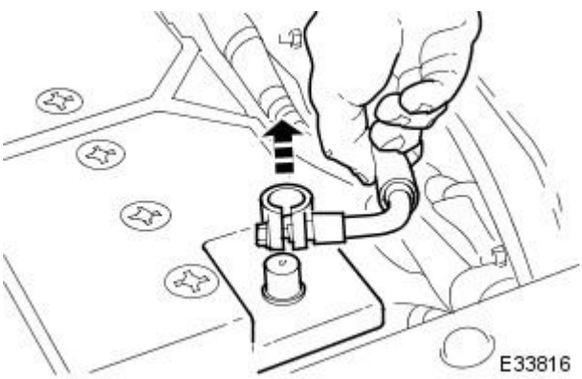

7. Remove the driver's air bag module; refer to Section 501-20.
8. Remove the steering wheel; refer to Section 211-04.
9. Remove the cassette and cancellation module; refer to Section 211-04.
10. Remove the steering column switchgear mounting bracket; refer to this section.
11. Disconnect the wiring harness multiplug.
    1. Cut the solenoid harness securing strap.
    2. Disconnect the solenoid wiring harness multiplug.

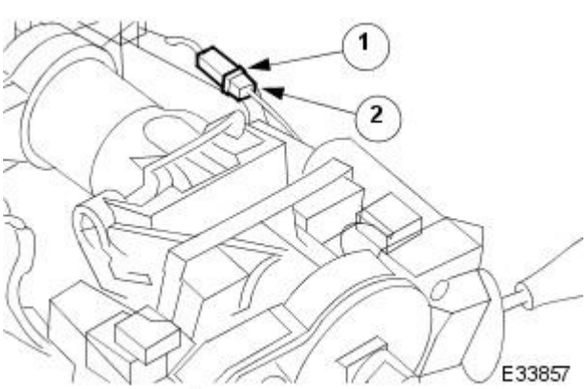

12. Remove the solenoid from the lock housing..
    1. Use a pin punch to drive out the pin securing the solenoid to the lock housing.
    2. Withdraw the solenoid from the lock housing.

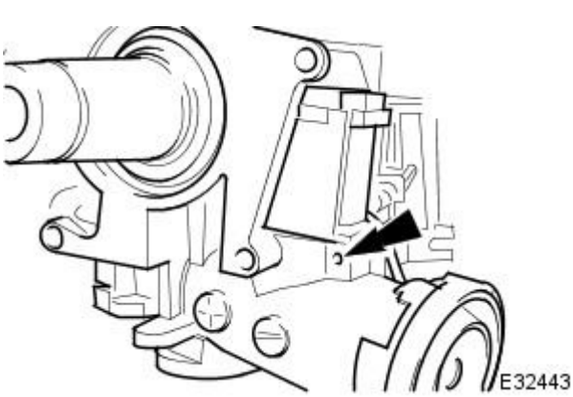

Installation

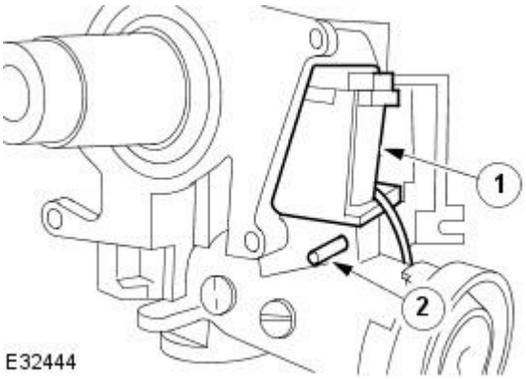

1. Install the solenoid to the steering lock housing.

1. Install and fully seat the solenoid to the steering lock housing.
2. Use a suitable pin punch to drive in a new pin to secure the solenoid to the lock housing.

2. Install the steering column switchgear mounting bracket; refer to this section.

3. Install the cassette and cancellation module; refer to Section 211-04.

4. Install the steering wheel; refer to Section 211-04.

5. Install the air bag module; refer to Section 501-20.

6. Reconnect the battery ground cable.

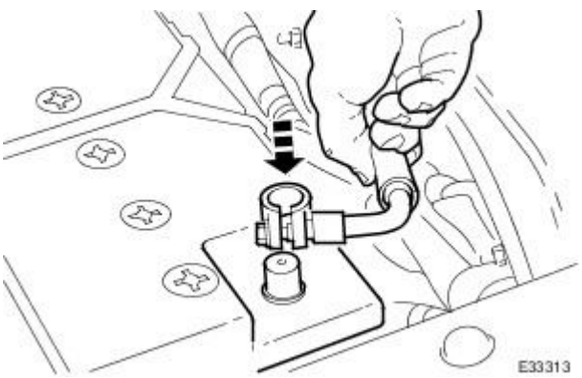

7. Install the battery cover.

8. Install the underscuttle; refer to Section 501-05.

9. Install the steering column upper cowl; refer to Section 501-05.

10. Install the steering column lower cowl; refer to Section 501-05.

Steering Column Switches - Steering Column Multifunction Switch

Removal and Installation

Removal

1. Remove underscuttle; refer to Section 501-05.
2. Remove the steering column lower cowl; refer to Section 501-05.
3. Remove the steering column upper cowl; refer to Section 501-05.
4. Remove the battery cover.

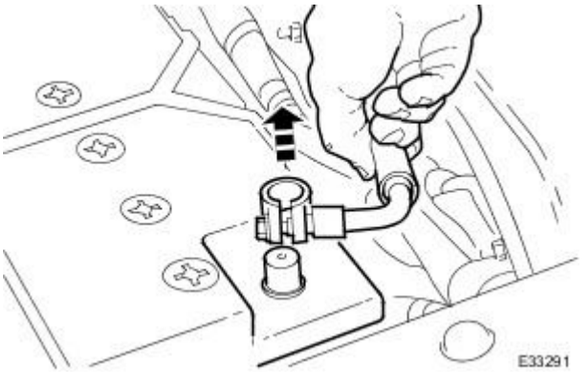

5. WARNING: WAIT AT LEAST ONE MINUTE BEFORE STARTING WORK, BECAUSE THE AIR BAG IS EQUIPPED WITH A BACK-UP POWER SOURCE AND MAY BE INADVERTENTLY DEPLOYED.

   Disconnect the battery ground cable.

6. Remove the driver's air bag module; refer to Section 501-20.
7. Ensure that the steering wheel is in the straight ahead position.
8. Remove the steering wheel; refer to this section.
9. Disconnect the harness multiplugs.
   1. Disconnect the cancellation module multiplugs.
   2. Release the wiper/washer multiplug from the mounting bracket and disconnect it.
   3. Release the flasher/headlamp switch multiplug from the mounting bracket and disconnect it.

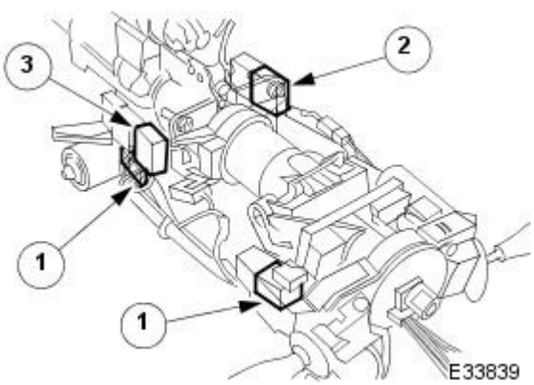

10. Remove the switch/assemblies cancellation module.
    1. Unscrew and remove the bolts securing the switch assemblies/cancellation module to the mounting bracket.
    2. Remove the steering column switchgear assembly.
    3. Release the switch assemblies from the module and mounting bracket.
    4. Remove the switch assemblies/cancellation module.

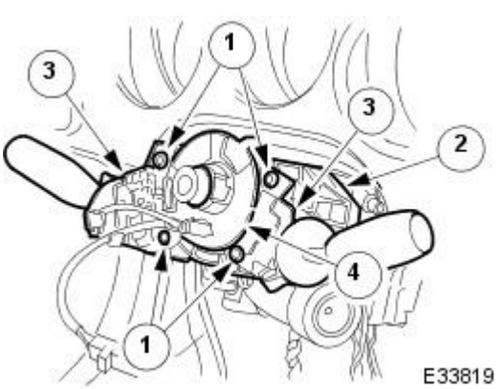

Installation

1. Install and align the cancellation module and switch assemblies to the steering column mounting bracket.
   1. Install and align the flasher switch assembly to the module mounting bracket.
   2. Install and align the washer switch assembly to the module mounting bracket.
   3. Install and align the switchgear assembly to the steering column.
   4. Install and tighten the switch assemblies/cancellation module securing screws.

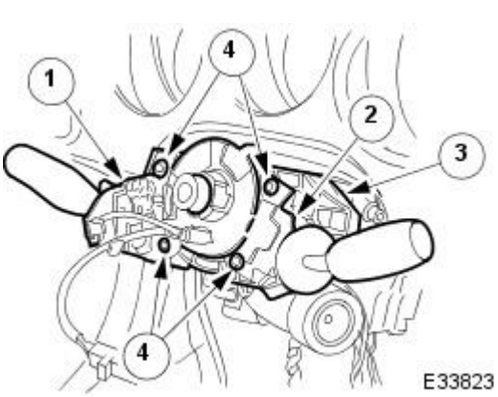

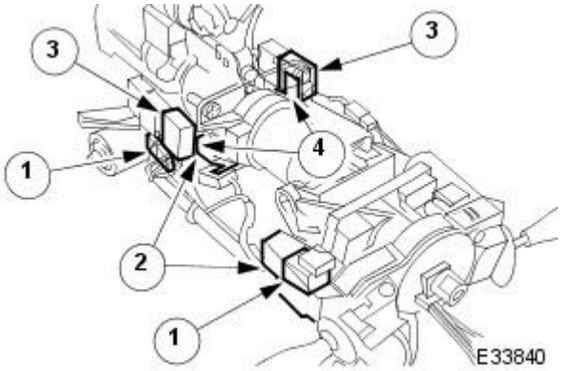

2. Connect the module harness multiplugs and install in the mounting bracket.

1. Connect the module harness multiplugs.
2. Install the multiplugs in the mounting bracket.
3. Connect the switch assembly multiplugs.
4. Install the multiplugs in the mounting bracket.

3. Install the steering wheel; refer to this section.

4. Install the air bag; refer to Section 501-20.

5. Install the steering column upper cowl; refer to Section 501-05.

6. Install the steering column lower cowl; refer to Section 501-05.

7. Install the underscuttle; refer to Section 501-05.

8. Reconnect the battery ground cable.

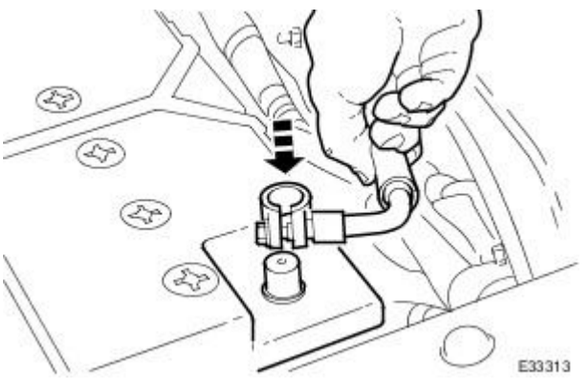

9. Install the battery cover.

Steering Column Switches - Steering Column Multifunction Switch Mounting Bracket

Removal and Installation

Removal

1. Remove the underscuttle; refer to Section 501-05.

2. Remove the steering column lower cowl; refer to Section 501-05.

3. Remove the steering column upper cowl; refer to Section 501-05.

4. Remove the battery cover.

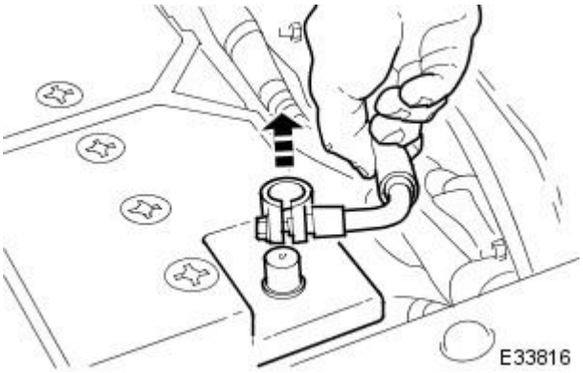

5. WARNING: WAIT AT LEAST ONE MINUTE BEFORE STARTING WORK, BECAUSE THE AIR BAG IS EQUIPPED WITH A BACK-UP POWER SOURCE AND MAY BE INADVERTENTLY DEPLOYED.

Disconnect the battery ground cable.

6. Remove the driver's air bag module; refer to Section 501-20.

7. Ensure that the steering is centered.

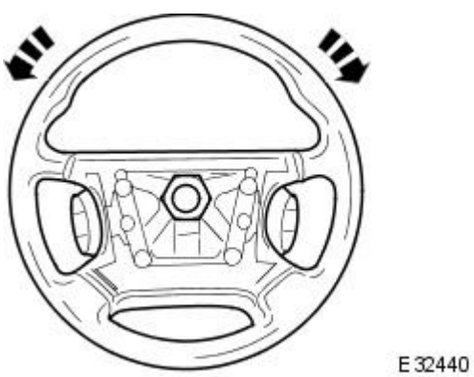

8. Remove the steering wheel; refer to Section 211-04.

9. Disconnect the cancellation module multiplugs.

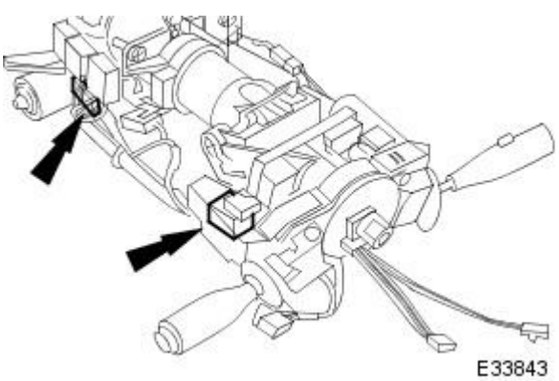

10. Remove the wiper/washer switch multiplug.

1. Release the multiplug from the mounting bracket.
2. Disconnect the multiplug.

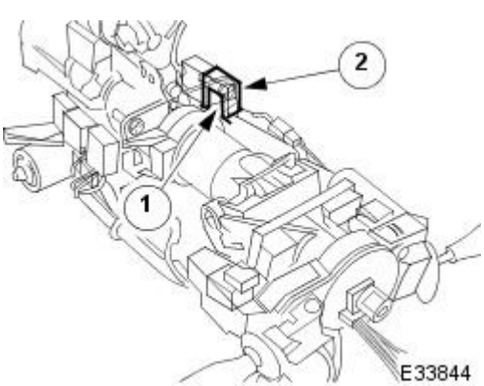

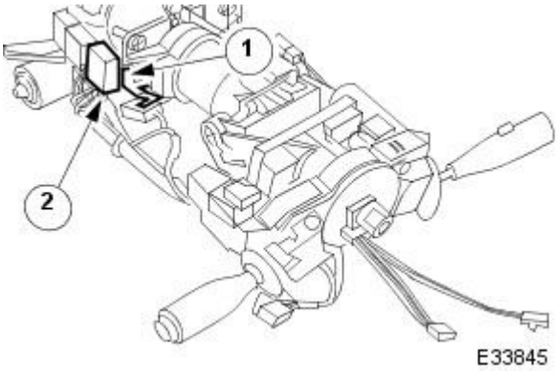

11. Remove the flasher/headlamp switch multiplug.

1. Release the multiplug from the mounting bracket.
2. Disconnect the multiplug.

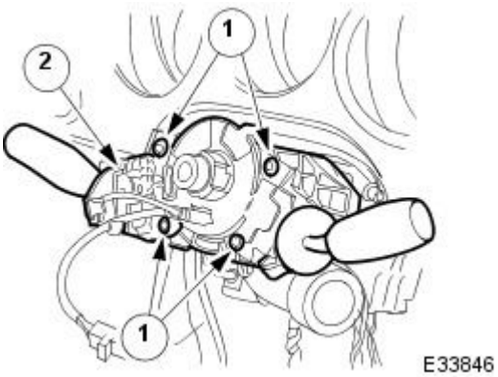

12. Remove the switch assemblies/cancellation module.

1. Unscrew the switchgear securing screws.
2. Remove the switchgear assembly from the mounting bracket.

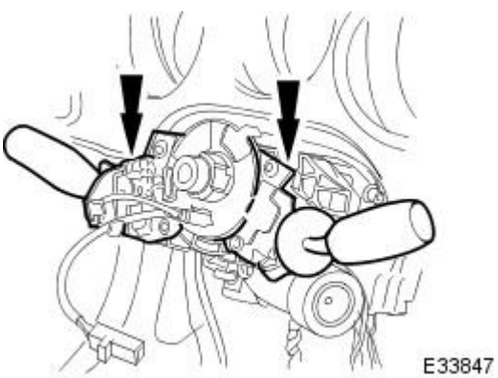

13. Remove the switch assemblies from the cancellation module and mounting bracket.

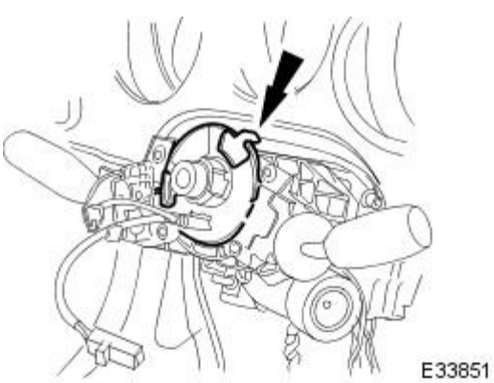

14. Remove the cancellation module from the mounting bracket.

Installation

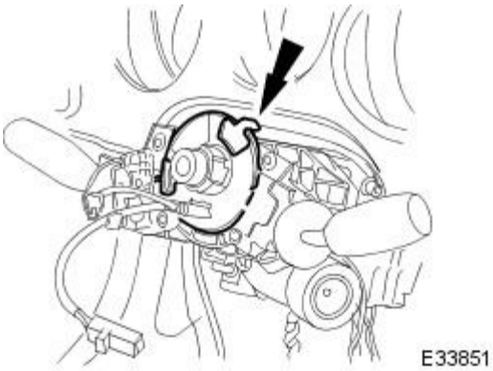

1. Install and align the cancellation module to the column mounting bracket.

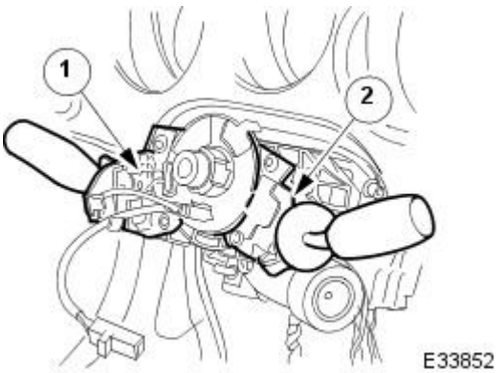

2. Install the flasher switch and washer switch assemblies to the module mounting bracket.

1. Install and align the flasher switch assembly.
2. Install and align the washer switch assembly.

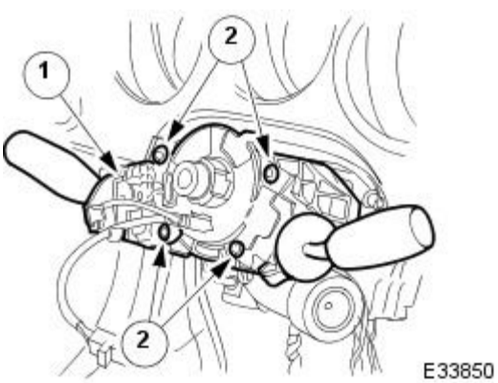

3. Install switchgear assembly to the steering column.

1. Install and align the switchgear assembly to the steering column.
2. Install and tighten the switchgear and cancellation module securing bolts.

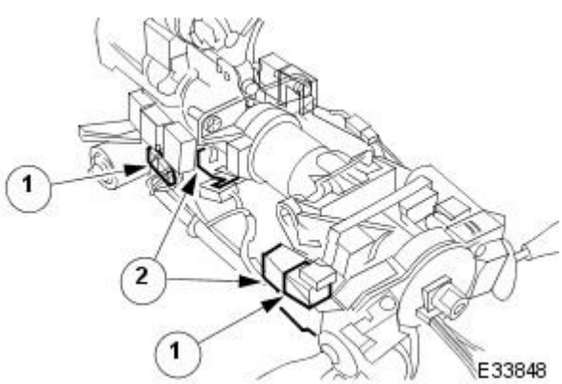

4. Reconnect and locate the cancellation module harness multiplugs.

1. Reconnect the cancellation module harness multiplugs.
2. Locate the multiplugs to the mounting bracket.

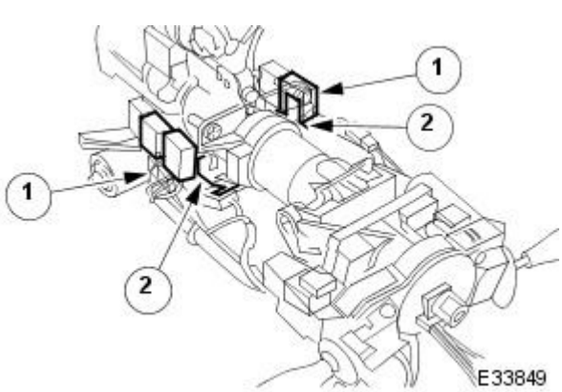

5. Reconnect and locate the switch assembly multiplugs.

1. Reconnect the switch assembly harness multiplug.
2. Locate the multiplug to the mounting bracket.

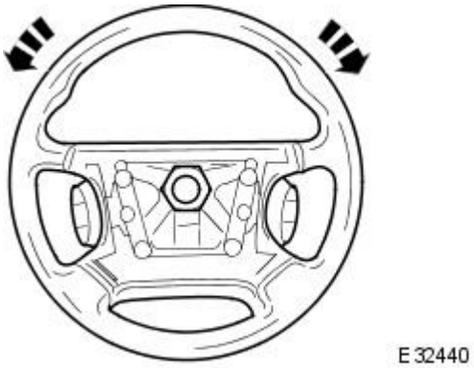

6. Install the steering wheel to the column in the correct orientation; refer to Section 211-04

7. Install the driver's air bag; refer to Section 501-20

8. Reconnect the battery ground cable.

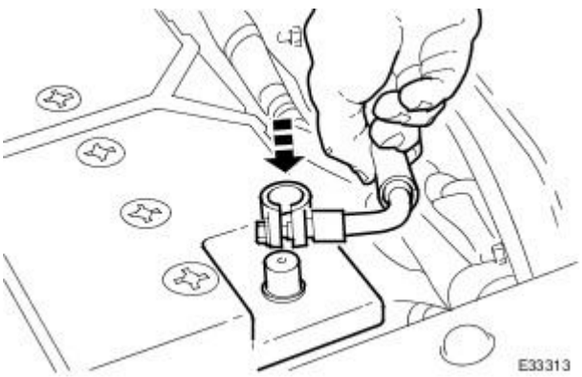

9. Install the battery cover.

10. Install the steering column upper and lower cowls.

1. Install the steering column upper cowl; refer to Section 501-05.
2. Install the steering column lower cowl; refer to Section 501-05.

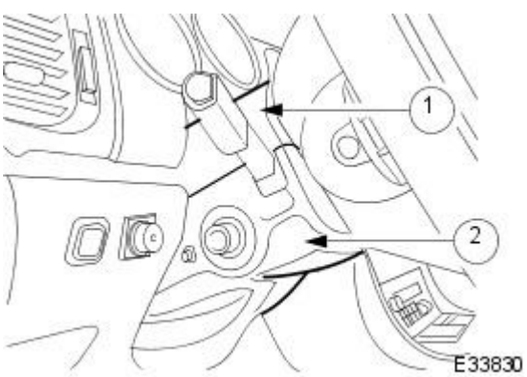

11. Install the underscuttle; refer to Section 501-05.

Engine System - General Information -

Engine Data

	4.2 Liter	4.2 Liter Supercharged
Engine Capacity	4196 cm³ (256 in³)	4196 cm³ (256 in³)
Engine Description	90° 'Vee' 8 Cylinder 32 Valves	90° 'Vee' 8 Cylinder 32 Valves
Maximum Engine Torque (DIN)	420 Nm / 310 lb ft at 4100 RPM	553 Nm / 408 lb ft at 3500 RPM
Maximum Engine Power (DIN)	300 BHP / 224 kW / 304 PS at 6000 RPM	400 BHP / 298 kW / 406 PS at 6100 RPM
Maximum Engine Torque (EC and SAE)	410.80 Nm / 303 lb ft at 4100 RPM	541.40 Nm / 399 lb ft at 3500 RPM
Maximum Engine Power (EC and SAE)	293.50 BHP / 218.9 kW / 298 PS at 6000 RPM	390 BHP / 290.80 kW / 3953 PS at 6100 RPM
Compression Ratio	11.00 : 1 ± 0.50 : 1	9.10 : 1 ± 0.50 : 1
Bore	86.0 mm (3.386 in)	86.0 mm (3.386 in)
Stroke	90.30 mm (3.555 in)	90.30 mm (3.555 in)

Engine Coolant

Engine	VIN		Market	Coolant Specification	Coolant Capacities Liters (US Quarts)
	Vehicles built from	Vehicles built to			Note: 50% water + 50% coolant
2003 Model Year Onwards					
4.2 Liter	A30645	A48684	All	WSS M97B44-D	9.50 (10.00)
4.2 Liter Supercharged					11.50 (12.10)

Engine Oil

Engine	VIN		Market	Oil Specification	Vehicle fitted with oil cooler	Liters	
	Vehicles built from	Vehicles built to				Initial Fill	Service Fill
2003 Model Year Onwards							
4.2 Liter	A30645	A48684	NAS	API SL and ILSAC GF-3	Yes	8.60	7.00
			ROW	API SJ / EC and ACEA A1 or A3 Jaguar WSS-M2C913-B preferred			
4.2 Liter Supercharged			NAS	API SL and ILSAC GF-3			
			ROW	API SJ / EC and ACEA A1 or A3 Jaguar WSS-M2C913-B preferred			

Firing Order

Vehicles built from 2002.5 Model Year

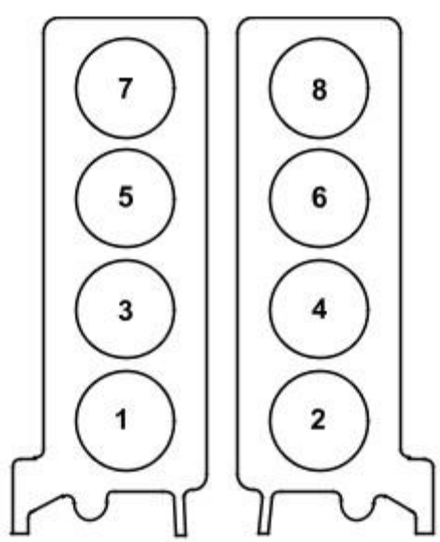

E 70522

Front of Engine

Bank 1 — Bank 2

Firing Order:

1, 2, 7, 3, 4, 5, 6, 8.

Sealants and Adhesives

Unit	Specification
Sealant-Engine Block-to-Bedplate and Sump-to-Bedplate (RTV Silicone)	Loctite 5699 Ultra Grey
Sealant-Engine Core Plugs and Block Stub Pipe (Anaerobic Sealant)	Loctite 648

Valve Clearances

Cold Engine	Inlet	Exhaust
Valve Clearance	0.18 - 0.22 mm	0.23 - 0.27 mm

Cylinder Head and Valve Train - Vehicles with 4.2L engine without supercharger

Item	Specification
Inlet valves clearances (mm)	0.18 - 0.22
Exhaust valves clearances (mm)	0.23 - 0.27
Valve guide inner diameter (mm)	5.02
Intake valve effective length (mm)	88.87 - 89.17
Exhaust valve effective length (mm)	88.40 - 88.70
Valve stem to guide clearance intake - diametral (mm)	0.012 - 0.067

Item	Specification
Valve stem to guide clearance exhaust - diametral (mm)	0.02 - 0.075
Valve head diameter intake (mm)	34.8 - 35.0
Valve head diameter exhaust (mm)	30.8 - 31.0
Intake valve face angle degree	45° 15'
Exhaust valve face angle degree	45° 15'
Valve stem diameter intake (mm)	4.963 - 4.978
Valve stem diameter exhaust (mm)	4.955 - 4.97
Valve spring free length (mm)	45.45 - 46.2
Valve spring installed height (mm)	33.20
Camshaft lobe lift intake (mm)	8.50
Camshaft lobe lift exhaust (mm)	8.50
Camshaft journal to cylinder head bearing surface clearance diametral (mm)	• Front bearing 0.035 - 0.095 • Other bearings 0.025 - 0.085
Camshaft journal diameter standard runout limit (mm)	• Center bearing to outer bearing's 0.07 • Other bearing to outer bearing's 0.05
Camshaft journal diameter standard out of round (mm)	0.005
Maximum permitted cylinder head warp (mm)	0.125

Cylinder Head and Valve Train - Vehicles with 4.2L engine with supercharger

Item	Specification
Inlet valves clearances (mm)	0.18 - 0.22
Exhaust valves clearances (mm)	0.23 - 0.27
Valve guide inner diameter (mm)	5.02
Intake valve effective length (mm)	88.87 - 89.17
Exhaust valve effective length (mm)	88.40 - 88.70
Valve stem to guide clearance intake - diametral (mm)	0.012 - 0.067
Valve stem to guide clearance exhaust - diametral (mm)	0.02 - 0.075
Valve head diameter intake (mm)	34.8 - 35.0
Valve head diameter exhaust (mm)	30.8 - 31.0
Intake valve face angle degree	45° 15'
Exhaust valve face angle degree	45° 15'
Valve stem diameter intake (mm)	4.963 - 4.978
Valve stem diameter exhaust (mm)	4.955 - 4.97
Valve spring free length (mm)	45.45 - 46.2
Valve spring installed height (mm)	33.2
Camshaft lobe lift intake (mm)	9.0
Camshaft lobe lift exhaust (mm)	8.1
Camshaft journal to cylinder head bearing surface clearance diametral (mm)	• Front bearing 0.035 - 0.095 • Other bearings 0.025 - 0.085
Camshaft journal diameter standard runout limit (mm)	• Center bearing to outer bearing's 0.07 • Other bearing to outer bearing's 0.05
Camshaft journal diameter standard out of round (mm)	0.005
Maximum permitted cylinder head warp (mm)	0.125

Published: 11-May-2011

Engine System - General Information - Engine

Description and Operation

Vehicles with 4.2L engine without supercharger

The 4.2L engine without supercharger consists of:

- an eight cylinder 90 degree 'Enclosed V' configuration liquid cooled aluminium cylinder block with dry cast liners
- pistons of open-ended skirt design, with two compression rings and a three piece oil control ring
- two aluminium cylinder heads, each incorporating two hollow camshafts manufactured in chilled cast iron
- four valves per cylinder
- aluminium tappets and top mounted shims
- continuous variable camshaft timing (VCT) of the inlet camshafts
- valve covers manufactured from Thermoplastic
- fuel injectors each with twelve holes
- engine front cover manufactured from aluminium which accommodates the crankshaft front oil seal
- multi row primary and single row secondary chains drive the camshafts of each cylinder bank
- an aluminium bed plate
- a cast iron crankshaft
- fracture-split connecting rods in sintered-forged steel
- brackets bolted to the front of the cylinder block which are used to mount all accessories
- a single, multi-vee belt which drives the front end accessories
- stainless steel exhaust manifolds
- an advanced engine management system incorporating electronic throttle control
- the requirements of the CARB OBDII USA legislation

The engine number is stamped onto the engine block adjacent to the thermostat housing.

Vehicles with 4.2L engine with supercharger

The 4.2L engine with supercharger consists of:

- an eight cylinder 90 degree 'Enclosed V' configuration liquid cooled aluminium cylinder block with dry cast liners
- pistons of open-ended skirt design, with two compression rings and a compact two piece oil control ring
- two aluminium cylinder heads, each incorporating two hollow camshafts manufactured in chilled cast iron
- four valves per cylinder
- aluminium tappets and top mounted shims
- valve covers manufactured from Thermoplastic
- fuel injectors each with twelve holes
- engine front cover manufactured from aluminium which accommodates the crankshaft front oil seal

- multi row primary and single row secondary chains drive the camshafts of each cylinder bank
- an aluminium bed plate
- oil spray jets in each cylinder bore
- a cast iron crankshaft
- fracture-split connecting rods in sintered-forged steel
- brackets bolted to the front of the cylinder block which are used to mount all accessories
- a single, multi-vee belt which drives the front end accessories
- stainless steel exhaust manifolds
- an advanced engine management system incorporating electronic throttle control.
- the requirements of the CARB OBDII USA legislation.

The engine number is stamped onto the engine block adjacent to the thermostat housing.

Published: 11-May-2011

Engine System - General Information - Engine

Diagnosis and Testing

Inspection and Verification

Since diagnosis and testing actually begins when repairs are taken on, the following procedure is recommended.

1. **1.** Verify the customer concern by operating the system.
2. **2.** Visually inspect for obvious signs of mechanical damage or electrical damage. If the concern cannot be reproduced, carry out a road test and/or visual check with the aid of the following table.

Visual Inspection Chart

Mechanical
○ Coolant leaks ○ Oil leaks ○ Leaks in the fuel system ○ Visibly damaged or worn parts ○ Loose or missing nuts or bolts

3. **3.** If an obvious cause for an observed or reported concern is found, correct the cause (if possible) before proceeding to the next step.
4. **4.** If the concern is not visually evident, verify the symptom and refer to the Symptom Chart.

Symptom Chart

Symptom Chart

Symptom	Possible Sources	Action
Difficult to start during hot or cold start	* Piston ring(s) worn, damaged, sticking or worn piston/cylinder.	* INSTALL new components as necessary.
	* Head gasket damaged.	* INSTALL new components as necessary.
	* Fuel system damaged or inoperative.	* REFER to Section 303-04 Fuel Charging and Controls.
	* Ignition system inoperative.	* REFER to Section 303-07 Engine Ignition.
Poor Idling	* Restricted exhaust system.	* INSPECT the exhaust system. REFER to Section 309-00 Exhaust System.
	* Vacuum leak.	* CARRY out the Intake Manifold Vacuum Test in this section. REPAIR or INSTALL new components as necessary new components as necessary.
	* Burned valve(s).	* INSTALL new components as necessary.
	* Incorrect valve to valve seat contact.	* INSTALL new components as necessary.
	* Head gasket damaged.	* INSTALL new components as necessary.
	* Fuel system damaged or inoperative.	* REFER to Section 303-04 Fuel Charging and Controls.
Insufficient power	* Compression leakage from valve seat.	* INSTALL new components as necessary.
	* Valve sticking.	* INSTALL new components as necessary.
	* Valve spring weak or broken.	* INSTALL new components as necessary.
	* Head gasket damaged.	* INSTALL new components as necessary.
	* Cylinder head cracked or distorted.	* INSTALL new components as necessary.
	* Piston ring(s) worn, damaged or sticking.	* INSTALL new components as necessary.
	* Fuel system damaged or inoperative.	* REFER to Section 303-04 Fuel Charging and Controls.
	* Brakes dragging.	* REFER to Section 206-00 Brake System - General Information.
	* Restricted exhaust system.	* INSPECT the exhaust system. REFER to Section 309-00 Exhaust System.
Excessive or insufficient compression.	* Valve(s) burnt or sticking.	* INSTALL new components as necessary.
	* Valve spring(s) weak or broken.	* INSTALL new components as necessary.
	* Piston ring(s) worn, damaged, sticking or worn piston/cylinder.	* INSTALL new components as necessary.
	* Head gasket damaged.	* INSTALL new components as necessary.
	* Carbon accumulation in combustion chamber.	* ELIMINATE carbon build up.
	* Fuel system damaged or inoperative.	* REFER to Section 303-04 Fuel Charging and Controls.
Excessive oil consumption	* Piston ring(s) worn, damaged, sticking or worn piston/cylinder.	* INSTALL new components as necessary.
	* Valve stem seal worn or missing.	* INSTALL new components as necessary.
	* Oil leakage.	* REPAIR oil leakage.
	* Valve stem or valve guide worn.	* INSTALL new components as necessary.
	* Incorrect oil viscosity.	* DRAIN and FILL with new oil.
	* Diluted oil.	* CHECK oil dilution. DRAIN and FILL as necessary.
	* Crankcase overfilled.	* CHECK and adjust the oil level.
	* Incorrect oil pressure.	* CHECK the oil pressure. REPAIR as necessary.
Engine noise	* Excessive crankshaft main bearing clearance.	* INSTALL new components as necessary.
	* Excessive crankshaft end play.	* INSTALL new components as necessary.
	* Excessive connecting rod bearing oil clearance.	* INSTALL new components as necessary.
	* Piston/cylinder worn.	* INSTALL new components as necessary.
	* Piston ring damaged.	* INSTALL new components as necessary.
	* Connecting rod bent.	* INSTALL new components as necessary.
	* Valve spring(s) broken.	* INSTALL new components as necessary.
	* Excessive valve guide clearance.	* INSTALL new components as necessary.
	* Cooling system inoperative (water pump, vibration of radiator),	* Refer to Section 303-03A Engine CoolingSection 303-03B Supercharger Cooling
	* Fuel system inoperative.	* REFER to Section 303-04 Fuel Charging and Controls.

	* Excessive carbon buildup.	* ELIMINATE carbon buildup.
	* Exhaust gas leakage.	* REPAIR leakage. REFER to Section 309-00 Exhaust System.
	* Incorrect drive belt tension.	* INSPECT the drive belt tension. REFER to Section 303-05 Accessory Drive.
	* Generator front bearing worn.	* REFER to Section 414-02 Generator and Regulator.
Tappet noise, engine running	* Incorrect tappet clearance.	* CHECK and ADJUST the tappet clearance as necessary.

Component Tests

Engine Oil Leaks

• NOTE: Before installing new gaskets or oil seals, make sure that the fault is clearly established.

If the oil leak cannot be identified clearly by a visual inspection, carry out an UV test:

Fluorescent Oil Additive Method

1. **1.** Clean the engine with a suitable cleaning fluid (brake cleaner).
2. **2.** Drain the engine oil and refill with recommended oil, premixed with Diesel Engine Oil Dye or equivalent. Use a minimum 14.8 ml (0.5 ounce) to a maximum 29.6 ml (1 ounce) of fluorescent additive to all engines. If oil is not premixed, fluorescent additive must first be added to the crankcase.
3. **3.** Run engine for 15 minutes. Stop the engine and inspect all seal and gasket areas for leaks using a 12 Volt Master UV Diagnostic Inspection Kit or equivalent. A clear bright yellow or orange area will identify leak. For extremely small leaks, several hours may be required for the leak to appear.
4. **4.** As necessary, pressurize the main oil gallery system to locate leaks due to incorrectly aligned plugs. If the flywheel bolts leak oil, look for sealer on the threads.
5. **5.** Repair all leaks as necessary.

Compression Test

General Remarks

• NOTE: Removing fuses and disconnecting electrical components causes the engine control module (ECM) to log an error message. After the measurements have been carried out this error message should be cleared from memory by connecting to the Jaguar Approved Diagnostic System.

• NOTE: Only check the compression pressure with the valves set to the prescribed clearance (if this can be adjusted).

The compression pressure should be checked with the engine at operating temperature.

Check The Compression Pressure

WARNING: On manual transmissions shift the transmission into neutral. On automatic transmission vehicles, select "P". Failure to follow these instructions may result in personal injury.

1. **1.** Remove the fuel pump relay.
2. **2.** Start the engine - the engine will start, run for a few seconds then stall.
3. **3.** Remove the spark plugs.
4. **4.** Install the compression tester.
5. **5.** Install an auxiliary starter switch in the starting circuit. With the ignition switch OFF, using the auxiliary starter switch, crank the engine a minimum of five compression strokes and record the highest reading. Note the approximate number of compression strokes required to obtain the highest reading.
6. **6.** Repeat the test on each cylinder, cranking the engine approximately the same number of compression strokes.
7. **7.** Install the components in reverse order, observing the specified tightening torques.
8. **8.** Reset the ECM fault memory.

Interpretation of the Results

The indicated compression pressure are considered within specification if the lowest reading cylinder is within 75% of the highest reading.

CAUTION: If engine oil is sprayed into the combustion chamber, after carrying out the measurement run the engine at 2000 rpm for about 15 minutes, in order to burn the oil and prevent damage to the catalytic converter.

If the measurement on one or more cylinders is much lower than the specified value, spray some engine oil into the combustion chamber and repeat the compression measurement.

If the reading greatly improves then the piston rings are damaged.

If the reading stays the same then the cause is either damaged valve seats or valve stem seals.

If the measurements for two cylinders next to each other are both too low then it is very likely that the cylinder head gasket between them is burnt through. This can also be recognized by traces of engine oil in the coolant and/or coolant in the engine oil.

Excessive Engine Oil Consumption

The amount of oil an engine uses will vary with the way the vehicle is driven in addition to normal engine-to-engine variation. This is especially true during the first 16,100 km (10,000 miles) when a new engine is being broken in or until certain internal components become conditioned. Vehicles used in heavy-duty operation may use more oil. The following are examples of heavy-duty operation:

- Trailer towing applications.
- Severe loading applications.
- Sustained high speed operation.

Engines need oil to lubricate the following internal components:

- Cylinder block cylinder walls.
- Pistons and piston rings.
- Intake and exhaust valve stems.
- Intake and exhaust valve guides.
- All internal engine components.

When the pistons move downward, a thin film of oil is left on the cylinder walls. As the vehicle is operated, some oil is also drawn into the combustion chambers past the intake and exhaust valve stem seals and burned.

The following is a partial list of conditions that can affect oil consumption rates:

- Engine size.
- Operator driving habits.
- Ambient temperatures.
- Quality and viscosity of oil.

Operation under varying conditions can frequently be misleading. A vehicle that has been run for several thousand miles on short trips or in below-freezing ambient temperatures may have consumed a "normal" amount of oil. However, when checking the engine oil level, it may measure up to the full mark on the oil level indicator due to dilution (condensation and fuel) in the engine crankcase. The vehicle then might be driven at high speeds on the highway where the condensation and fuel boil off. The next time the engine oil is checked it may appear that a liter of oil was used in about 160 km (100 miles) per liter oil consumption rate is about 2,400 km (1,500 miles) per liter.

Make sure the selected engine oil meets Jaguar specification and the recommended API performance category "SG" and SAE viscosity grade as shown in the vehicle Owner's Guide. It is also important that the engine oil is changed at the intervals specified for the typical operating conditions.

Oil Consumption Test

The following diagnostic procedure is used to determine the source of excessive oil consumption.

• NOTE: Oil use is normally greater during the first 16,100 km (10,000 miles) of service. As mileage increases, oil use decreases. Vehicles in normal service should get a least 16,000 km (10,000 miles) per liter. High speed driving, towing, high ambient temperature and other factors may result in greater oil use.

1. **1.** Define excessive consumption, such as the number of miles driven per liter of oil used. Also determine customers's driving habits, such as sustained high speed operation, towing, extended idle and other considerations.

2. **2.** Verify that the engine has no external oil leaks as described under Engine Oil Leaks.

3. **3.** Verify that the engine has the correct oil level.

4. **4.** Verify that the engine is not being run in an overfilled condition. Check the oil level at least five minutes after a hot shutdown with the vehicle parked on a level surface. In no case should the level be above the top of the cross-hatched area and the letter "F" in FULL. If significantly overfilled, carry out step 5, sub steps 1 through 4.

5. **5.** Carry out an oil consumption test:

    1. Drain engine oil and fill with one liter less than the recommended amount.
    2. Run the engine for three minutes (10 minutes if cold), and allow oil to drain back for at least five minutes with vehicle parked on level surface.
    3. Remove the oil level indicator and wipe clean. (Do not wipe with anything contaminated with silicone compounds.) Install the oil level indicator making sure to seat the oil level indicator firmly in the oil level indicator tube. Remove the oil level indicator and draw a mark on the back (unmarked) surface at the indicated oil level. (This level should be about the same as the ADD mark on the face of the oil level indicator.)
    4. Add one liter of oil. Start the engine and allow to idle for at least two minutes. Shut off the engine and allow the engine oil to drain back for at least five minutes. Mark the oil level dipstick, using the procedure above. (This level may range from slightly below the top of the cross-hatched area to slightly below the letter "F" in FULL.
    5. Record the vehicles mileage.
    6. Instruct the customer to drive the vehicle as usual and:
        1. Check the oil level regularly at intervals of 160-240 km (100-150 miles).
        2. Return to the service point when the oil level drops below the lower (ADD) mark on the oil level indicator.
        3. Add only full liters of the same oil in an emergency. Note the mileage at which the oil is added.
    7. Check the oil level under the same conditions and at the same location as in steps 3 and 4.
        1. Measure the distance from the oil level to the UPPER mark on the oil level indicator and record.
        2. Measure the distance between the two scribe marks and record.
        3. Divide the first measurement by the second.
        4. Divide the distance driven during the oil test by the result. This quantity is the approximate oil consumption rate in kilometers per liter or in mile per quart.
        5. If the oil consumption rate is unacceptable go to Step 6.

6. **6.** Check the positive crankcase ventilation (PCV) system. Make sure the system is not plugged.

7. **7.** Check for plugged oil drain-back holes in the cylinder head and cylinder block.

8. **8.** If the condition still exists after carrying out the above tests go to step 9.

9. **9.** Carry out a cylinder compression test. Refer to the procedure in this section : Compression Test. This can help determine the source of oil consumption such as valves, piston rings or other areas.

10. **10.** Check valve guides for excessive guide clearance. Install new valve stem seals after verifying valve guide clearance.

11. **11.** Worn or damaged internal engine components can cause excessive oil consumption. Small deposits of oil on the tips of the spark plugs can be a clue to internal oil consumption.

Intake Manifold Vacuum Test

Bring the engine to normal operating temperature. Connect a vacuum gauge or equivalent to the intake manifold. Run the engine at the specified idle speed.

The vacuum gauge should read between 51-74 kPa (15-22 in-Hg) depending upon the engine condition and the altitude at which the test is performed. Subtract 4.0193 kPa (1 in-Hg) from the specified reading for every 304.8 m (1,000 feet) of elevation above sea level.

The reading should be steady. As necessary, adjust the gauge damper control (where used) if the needle is fluttering rapidly. Adjust damper until needle moves easily without excessive flutter.

Interpreting Vacuum Gauge Readings

A careful study of the vacuum gauge reading while the engine is idling will help pinpoint trouble areas. Always conduct other appropriate tests before arriving at a final diagnostic decision. Vacuum gauge readings, although helpful, must be interpreted carefully.

Most vacuum gauges have a normal band indicated on the gauge face.

The following are potential gauge readings. Some are normal; others should be investigated further.

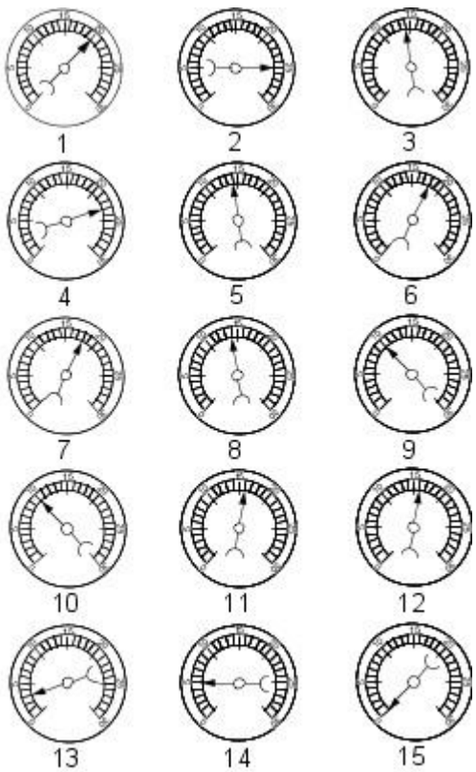

VUJ0001694

1. **1.** NORMAL READING: Needle between 51-74 kPa (15-22 in-Hg) and holding steady.
2. **2.** NORMAL READING DURING RAPID ACCELERATION : When the engine is rapidly accelerated (dotted needle), the needle will drop to a low (not to zero) reading. When the throttle is suddenly released, the needle will snap back up to a higher than normal figure.
3. **3.** NORMAL FOR HIGH-LIFT CAMSHAFT WITH LARGE OVERLAP: The needle will register as low as 51 kPa (15 in-Hg) but will be relatively steady. Some oscillation is normal.
4. **4.** WORN RINGS OR DILUTED OIL: When the engine is accelerated (dotted needle), the needle drops to 0 kPa (0 in-Hg). Upon deceleration, the needle runs slightly above 74 kPa (22 in-Hg).
5. **5.** STICKING VALVES: When the needle (dotted) remains steady at a normal vacuum but occasionally flicks (sharp, fast movement) down and back about 13 kPa (4 in-Hg), one or more valves may be sticking.
6. **6.** BURNED OR BENT VALVES: A regular, evenly-spaced, downscale flicking of the needle indicates one or more burned or damaged valves. Insufficient hydraulic valve tappet or hydraulic lash adjuster clearance will also cause this reaction.
7. **7.** POOR VALVE SEATING: A small but regular downscale flicking can mean one or more valves are not seating correctly.
8. **8.** WORN VALVE GUIDES: When the needle oscillates over about a 13 kPa (4 in-Hg) range at idle speed, the valve guides could be worn. As engine speed increases, the needle will become steady if guides are responsible.
9. **9.** WEAK VALVE SPRINGS: When the needle oscillation becomes more violent as engine RPM is increased, weak valve springs are indicated. The reading at idle could be relatively steady.
10. **10.** LATE VALVE TIMING: A steady but low reading could be caused by late valve timing.
11. **11.** IGNITION TIMING RETARDING: Retarded ignition timing will produce a steady but somewhat low reading.
12. **12.** INSUFFICIENT SPARK PLUG GAP: When spark plugs are gapped too close, a regular, small pulsation of the needle can occur.
13. **13.** INTAKE LEAK: A low, steady reading can be caused by an intake manifold or throttle body gasket leak.
14. **14.** BLOWN HEAD GASKET: A regular drop of fair magnitude can be caused by a blown head gasket or warped cylinder head to cylinder block surface.
15. **15.** RESTRICTED EXHAUST SYSTEM: When the engine is first started and is idled, the reading may be normal, but as the engine RPM is increased, the back pressure caused by a clogged muffler, kinked tail pipe or other concerns will cause the needle to slowly drop

to 0 kPa (0 in-Hg). The needle then may slowly rise. Excessive exhaust clogging will cause the needle to drop to a low point even if the engine is only idling.

When vacuum leaks are indicated, search out and correct the cause. Excess air leaking into the system will upset the fuel mixture and cause concerns such as rough idle, missing on acceleration or burned valves. If the leak exists in an accessory such as the power brake booster, the unit will not function correctly. Always repair vacuum leaks.

Engine System - General Information - Bearing Inspection

General Procedures

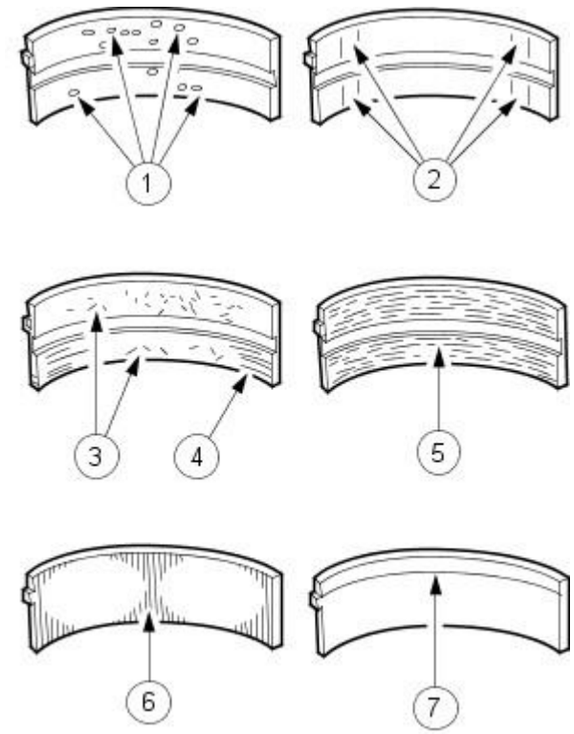

VUJ0002219

1. Inspect bearings for the following defects.

1. Cratering - fatigue failure
2. Spot polishing - incorrect seating.
3. Imbedded dirt engine oil.
4. Scratching - dirty engine oil.
5. Base exposed - poor lubrication.
6. Both edges worn - journal damaged.
7. One edge worn - journal tapered or bearing not seated.

Engine System - General Information - Camshaft Bearing Journal Clearance

General Procedures

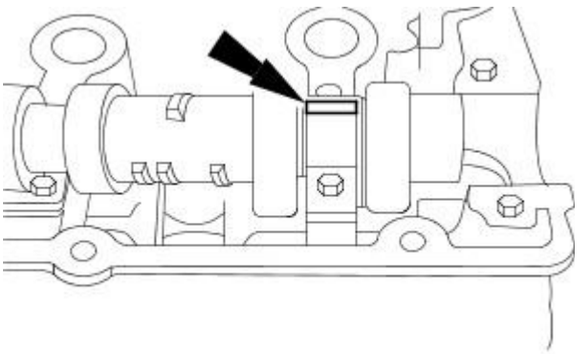

VUJ0001696

1. NOTE: Make sure that the following stages are followed exactly. The tappets or followers must be removed to carry out this measurement.

• NOTE: Make sure that the camshaft is to specification.

• NOTE: The bearing caps and journals should be free from engine oil and dirt.

Position on a length of plastigage on the bearing cap.

- Insert the camshaft, without lubrication, into the cylinder head.
- Position a plastigage strip, which should be equal to the width of the bearing cap, on the bearing journal.

2. Install the camshaft bearing caps.

- Follow the relevant tightening sequence.

3. NOTE: Do not strike the bearing caps.

Remove the camshaft bearing caps.

- Follow the relevant loosening sequence.

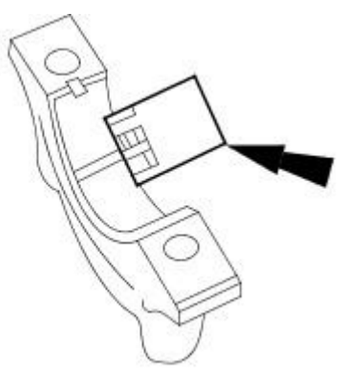

VUJ0001697

4. Using the special tool, read off the measurement.

- Compare the width of plastigage with the plastigage scale.
- The value that is read off is the bearing clearance.
- If the values are not to specification install a new camshaft.

Published: 11-May-2011

Engine System - General Information - Camshaft Bearing Journal Diameter

General Procedures

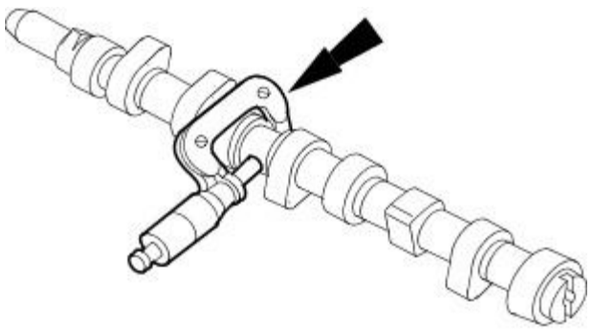

VUJ0001695

1. Determine the diameter of the camshaft journals.

- Using a micrometer measure the diameter at 90 degrees intervals to determine if the journals are out-of-round.
- Measure at two different points on the journal to determine if there is any tapering.
- If the measurements are out of the specified range, install a new camshaft.

Engine System - General Information - Camshaft End Play

General Procedures

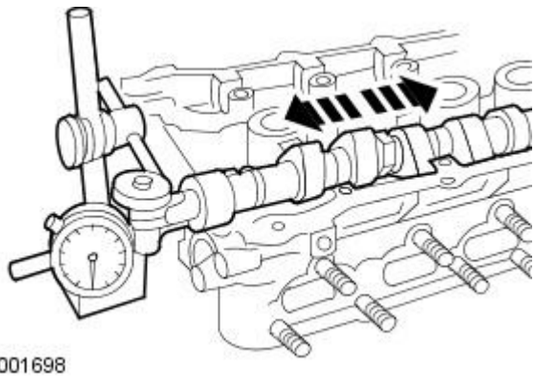

VUJ0001698

1. NOTE: Make sure that the camshaft is to specification.

Using the special tool, measure the end play.

- Slide the camshaft in both directions. Read and note the maximum and minimum values on the dial indicator gauge.
  1. End play = maximum value minus minimum value.
- If the measurement is out of specification, install new components.

Engine System - General Information - Camshaft Lobe Lift

General Procedures

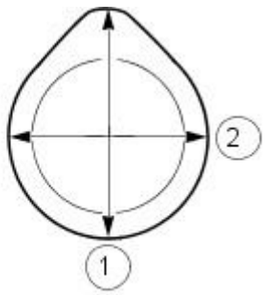

VUJ0001699

1. Measure the diameter (1) and diameter (2) with a vernier caliper. The difference in measurements is the lobe lift.

Engine System - General Information - Camshaft Surface Inspection

General Procedures

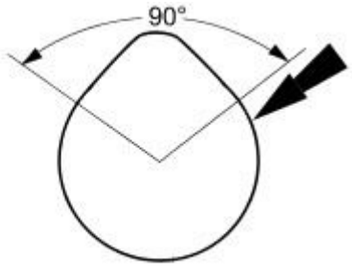

VUJ0001700

1. Inspect camshaft lobes for pitting or damage in the active area. Minor pitting is acceptable outside the active area.

Engine System - General Information - Connecting Rod Cleaning

General Procedures

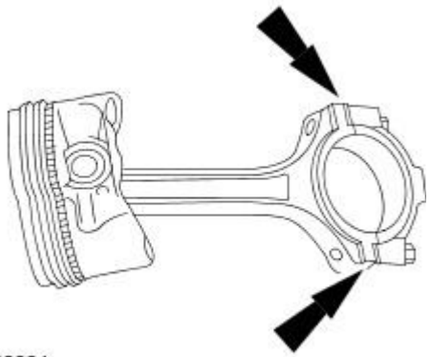

VUJ0002224

1. CAUTION: Do not use a caustic cleaning solution or damage to connecting rods may occur.

Mark and separate the parts and clean with solvent. Clean the oil passages.

Engine System - General Information - Connecting Rod Large End Bore

General Procedures

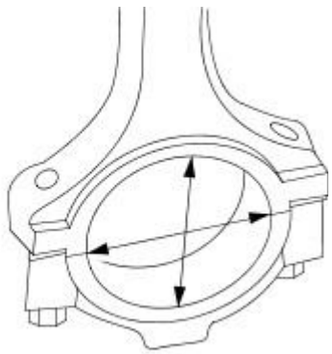

VUJ0002223

1. Measure the bearing bore in two directions. The difference is the connecting rod bore out-of-round. Verify the out-of-round is within specification.

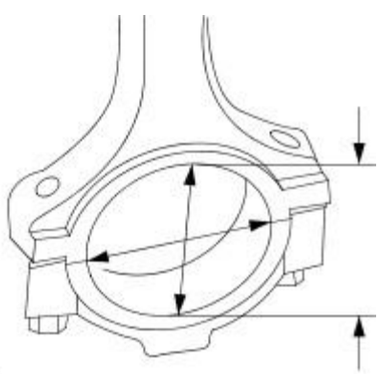

VUJ0002222

2. Measure the bearing bore diameter in two directions. Verify the bearing bore is within specification.

Engine System - General Information - Crankshaft End Play

General Procedures

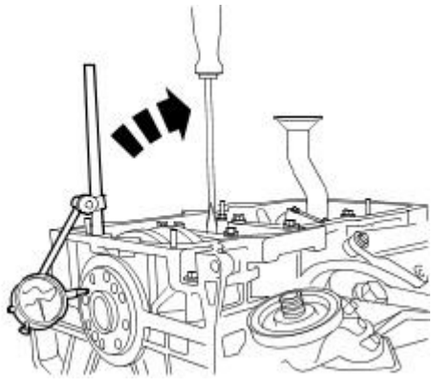

VUJ0002235

1. Using the Dial Indicator Gauge with Brackets, measure the end play.

- Measure the end play by lifting the crankshaft using a lever.
- If the value is out of the specification, install new thrust half rings to take up the end float and repeat the measurement.

Engine System - General Information - Crankshaft Main Bearing Journal Clearance

General Procedures

CAUTION: **THESES PROCEDURES SHOULD NOT BE CARRIED OUT DURING THE MANUFACTURERS WARRANTY PERIOD.**

1. NOTE: **Example - *PJEAL* - Crankshaft Main Journal Diameter.**

Read the grade letters from LEFT to RIGHT = FRONT to REAR of engine eg. for this example engine, the crank journal at the front of the engine is grade P, and at the rear is grade L.

- The selection of main bearing shells is described in the following chart.

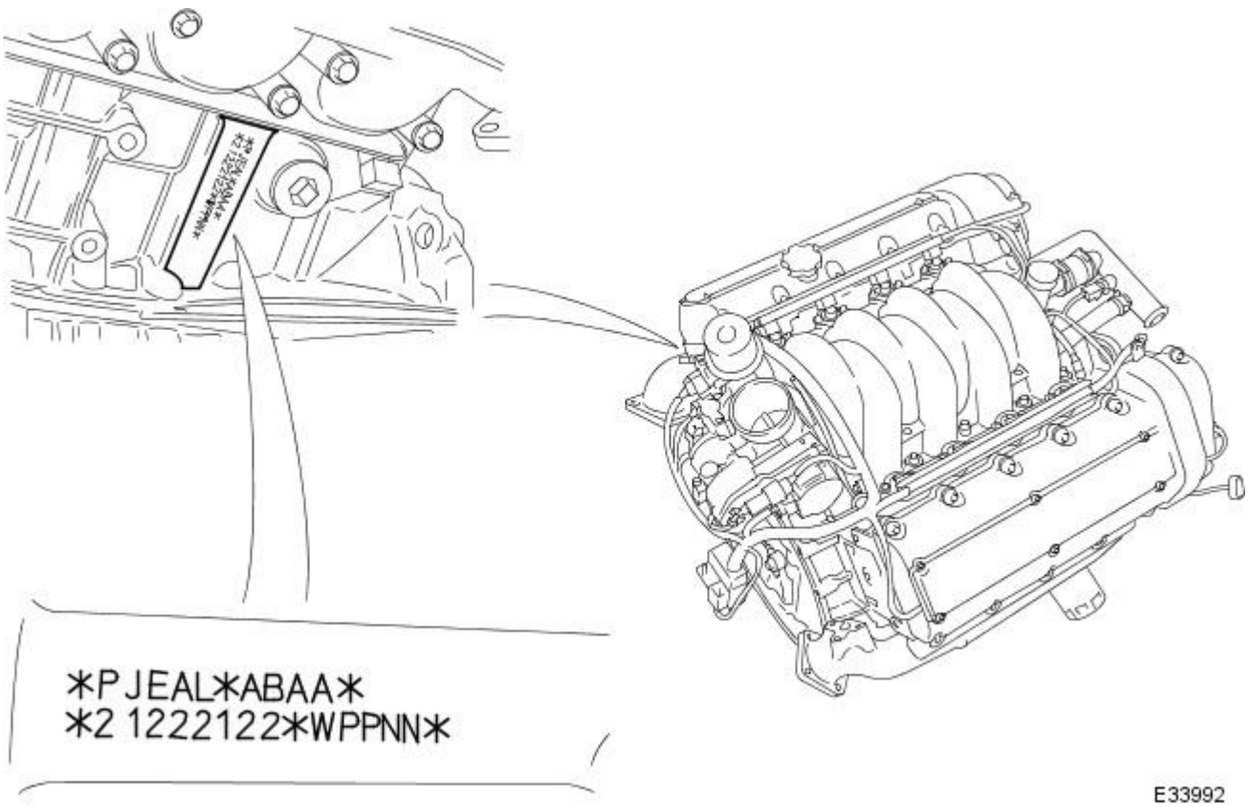

2. NOTE: **Example - *ABAA* - Crankshaft (Big End Bearing) Crankpin Diameter**

• NOTE: **For vehicles built up to 2002 MY.**

• NOTE: **If the crankshaft main bearing carrier retaining bolts have been marked with a center punch dot, they must be discarded and new bolts installed.**

Read the grade letters from LEFT to RIGHT = FRONT to REAR of engine eg. for this example engine, the crankpin at the front of the engine is grade A and at the rear is also grade A.

- Grade A = 56,000 to 55,994 mm (Bearing Shell Color Code - Blue).
- Grade B = 55,994 to 55,988 mm (Bearing Shell Color Code - Green).
- Grade C = 55,988 to 55,982 mm (Bearing Shell Color Code - Yellow).

3. NOTE: **Example - *ABAA* - Crankshaft (Big End Bearing) Crankpin Diameter**

• NOTE: **For vehicles built from 2002 MY.**

• NOTE: **If the crankshaft main bearing carrier retaining bolts have been marked with a center punch dot, they must be discarded and new bolts installed.**

Read the grade letters from LEFT to RIGHT = FRONT to REAR of engine eg. for this example engine, the crankpin at the front of the engine is grade A and at the rear is also grade A.

- Grade A = 53,000 to 52,994 mm (Bearing Shell Color Code - Blue).
- Grade B = 52,994 to 52,988 mm (Bearing Shell Color Code - Green).

- Grade C = 52,988 to 52,982 mm (Bearing Shell Color Code - Yellow).

4. NOTE: **Example - *21222122* - Cylinder Bore and Piston**

The cylinder bore grades read from LEFT to RIGHT as follows:

- Bank 2 - Cylinder 1, Bank 2 - Cylinder 2, Bank 2 - Cylinder 3, Bank 2 - Cylinder 4, Bank 1 - Cylinder 4,
- Bank 1 - Cylinder 3, Bank 1 - Cylinder 2, Bank 1 - Cylinder 1.
- **(Note, in earlier publications Bank 1 was described as A-Bank and Bank 2 as B-Bank)**
- Grade 1 Bore = 85,990 to 86,000 mm.
- Grade 2 Bore = 86,000 to 86,010 mm.
- Grade 3 Bore = 86,010 to 86,020 mm.

5. NOTE: **Example - *WPPNN* - Crankshaft Main Bearing Bore in Cylinder Block**

Read the grade letters from LEFT to RIGHT = FRONT to REAR of engine eg. for this example engine, the crank journal bore at the front of the engine is grade W, and at the rear is grade N.

- The selection of main bearing shells is described in the following **JOURNAL DIAMETER AND MAIN BEARING BORE CHART**.

6. JOURNAL DIAMETER AND MAIN BEARING BORE CHART

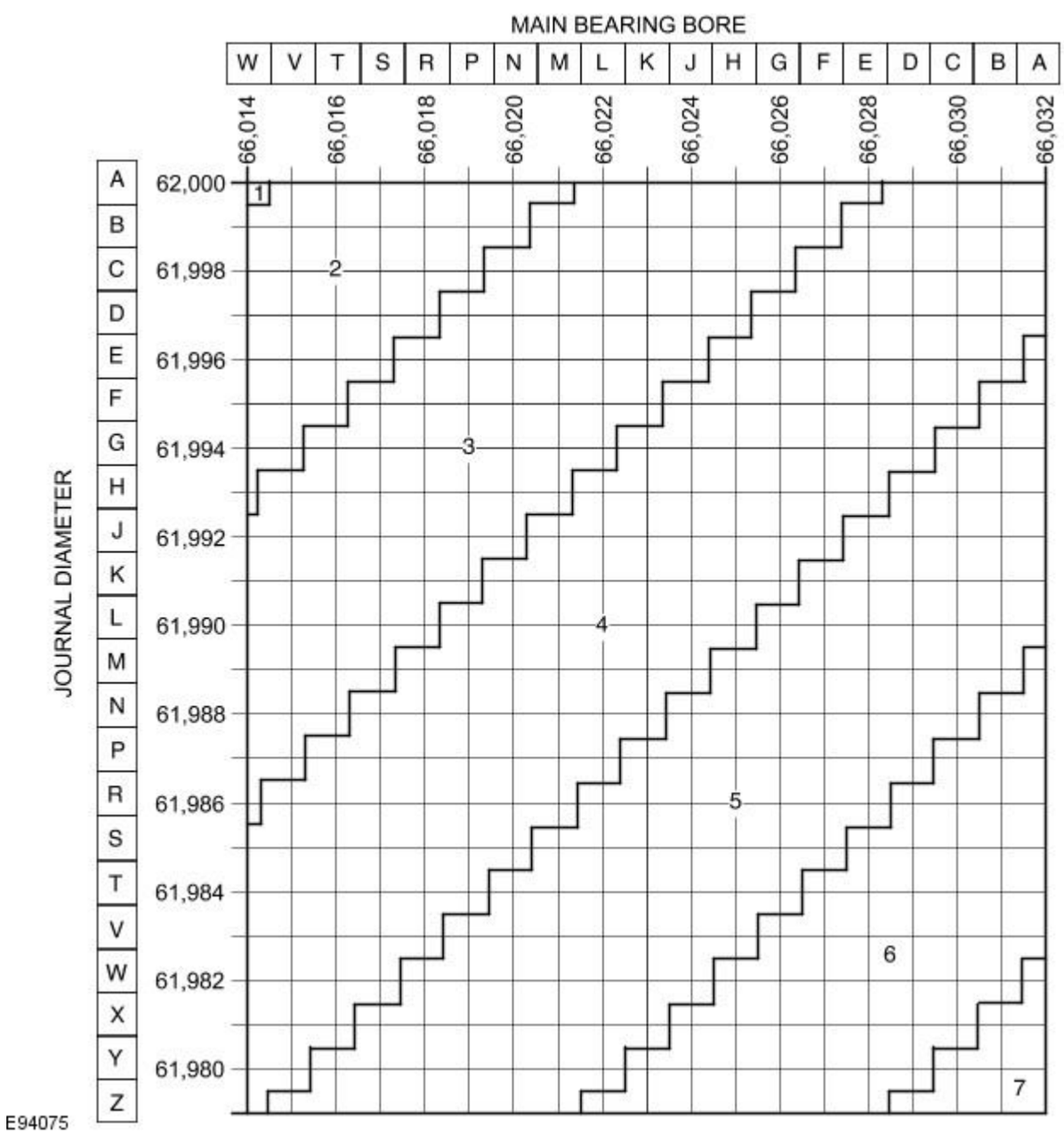

7. NOTE: **THIS PROCEDURE SHOULD ONLY BE CARRIED OUT WHEN REPLACIING MAIN BEARING SHELLS.**

• NOTE: Refer to the **JOURNAL DIAMETER AND MAIN BEARING BORE CHART** in step 6 for tolerance and bearing information.

The number in each diagonal band represents a PAIR of color coded main bearing shells which must be used with a specific journal, depending on the combination of journal diameter and crankshaft bore diameter. The color codes for each band are as follows:

1. **Blue / Green and Blue / Green**
2. **Blue / Green and Blue**
3. **Blue and Blue**
4. **Blue and Green**
5. **Green and Green**
6. **Green and Yellow**
7. **Yellow and Yellow**

- Consider crankshaft journal 5 (from the example grade markings on the cylinder block) - the cylinder block bore is Grade N and the crankshaft journal diameter is Grade L. From the chart, it will be seen that the point of intersection is in Band 4 which equates to one Blue shell and one Green shell.
- When the appropriate pair of color codes have been selected for a journal, either color may be installed to the cylinder block or to the bedplate, but, the shell which is to be installed to the cylinder block must have an oil groove and the shell which is to be installed to the bedplate must be plain.

8. NOTE: **THIS PROCEDURE SHOULD ONLY BE CARRIED OUT WHEN A REPLACMENT CRANKSHAFT OR CYLINDER BLOCK HAS BEEN FITTED.**

• NOTE: Refer to the **JOURNAL DIAMETER AND MAIN BEARING BORE CHART** in step 6 for tolerance and bearing information.

The thickness grade of all main bearing shells are to be selected to give a total running clearance of not less than 0.022 mm or greater than 0.040 mm.

- Each bearing bore in the block/bedplate assembly should be measured at two mutually perpendicular diameters 45° to the vertical in the middle of the bearing.
- The minimum diameter of the two is to be used.
- Each crankshaft main bearing journal should be measured dynamically at a point in line with the middle of each bearing.
- When the appropriate pair of color codes have been selected for a journal, either color may be installed to the cylinder block or to the bedplate, but, the shell which is to be installed to the cylinder block must have an oil groove and the shell which is to be installed to the bedplate must be plain.

Published: 11-May-2011

Engine System - General Information - Cylinder Bore Out-of-Round

General Procedures

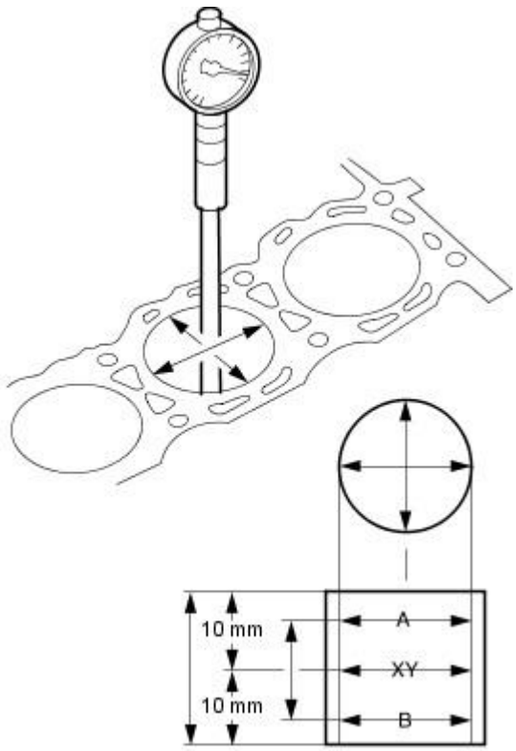

VUJ0002234

1. NOTE: The main bearing caps or lower crankcase must be in place and tightened to the specified torque; however, the bearing shells should not be installed.

Measure the cylinder bore with an internal micrometer.

- Carry out the measurements in different directions and at different heights to determine if there is any out-of-roundness or tapering.
- If the measurement is out of the specified range, hone out the cylinder block or install a new block.

Published: 11-May-2011

Engine System - General Information - Cylinder Head Distortion

General Procedures

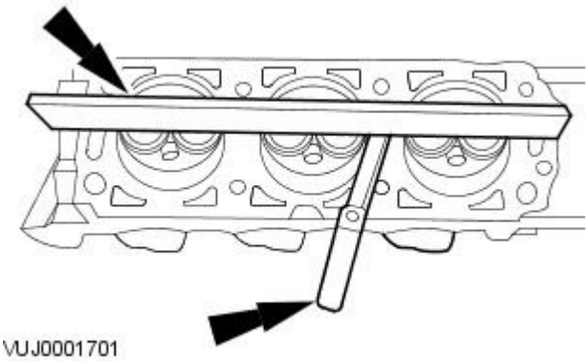

1. Measure the cylinder block/cylinder head distortion.

- Using the special tool, measure the mating face distortion.
- If the value is not to specification rework the mating face.

Engine System - General Information - Exhaust Manifold Cleaning and Inspection

General Procedures

1. Inspect the cylinder head joining flanges of the exhaust manifold for evidence of exhaust gas leaks.
2. Inspect the exhaust manifold for cracks, damaged gasket surfaces, or other damage that would make it unfit for further use.

Engine System - General Information - Piston Inspection

General Procedures

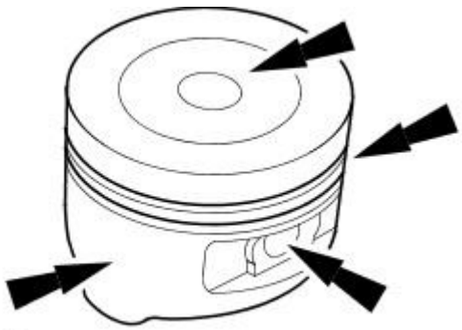

VUJ0002233

1. CAUTION: Do not use any aggressive cleaning fluid or a wire brush to clean the piston.

Carry out a visual inspection.

- Clean the piston skirt, pin bush, ring grooves and crown and check for wear or cracks.
- If there are signs of wear on the piston skirt, check whether the connecting rod is twisted or bent.

Published: 11-May-2011

Engine System - General Information - Piston Pin Diameter

General Procedures

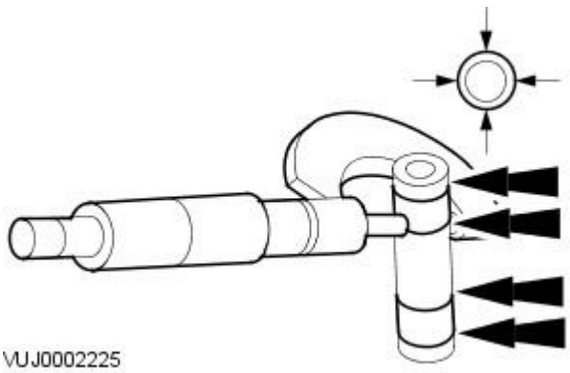

1. NOTE: The piston and piston pin are a matched pair. Do not mix up the components.

Measure the piston pin diameter.

- Measure the diameter in two directions.
- If the values are not to specification, install a new piston and a new piston pin.

Published: 11-May-2011

Engine System - General Information - Piston Pin to Bore Diameter

General Procedures

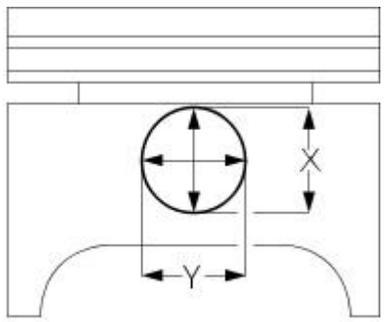

VUJ0002232

1. NOTE: The piston and piston pin form a matched pair. Do not mix up the components.

Measure the diameter of the piston pin bore.

- Measure the diameter in two directions.
- If the values are not to specification, install both a new piston and a new piston pin.

Engine System - General Information - Piston Ring End Gap

General Procedures

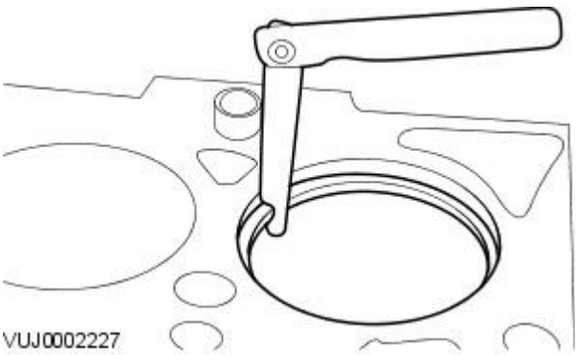

1. CAUTION: Do not mix up the piston rings. Install the piston rings in the same position and location.

Using the Feeler Gauge, measure the piston ring gap.

- The values given in the specification refer to a gauge ring used during production.

Engine System - General Information - Piston Ring-to-Groove Clearance

General Procedures

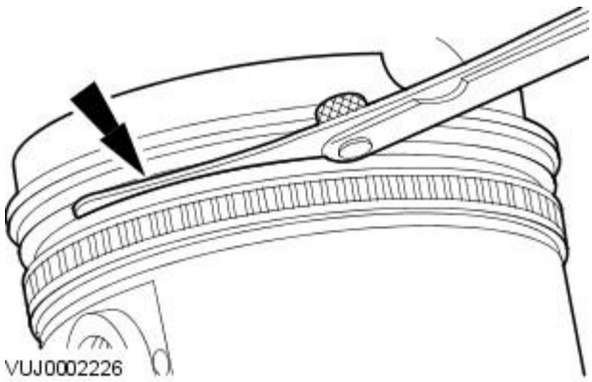

1. NOTE: The piston ring must protrude from the piston groove. To determine the piston ring clearance, insert the Feeler Gauge right to the back of the groove, behind the wear ridge.

Using the Feeler Gauge, measure the piston ring clearance.

Published: 11-May-2011

Engine System - General Information - Valve Spring Free Length

General Procedures

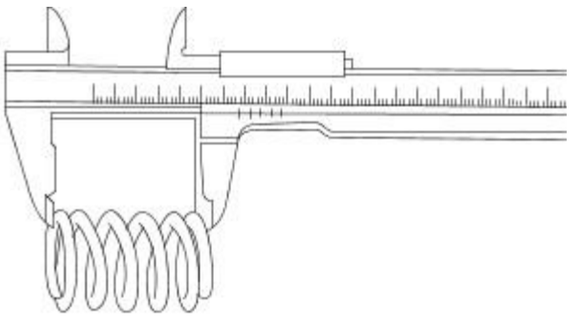

VUJ0002221

1. Using a vernier gauge, measure the free length of each valve spring. Verify the length is within specification.

Published: 11-May-2011

Engine System - General Information - Valve Stem Diameter

General Procedures

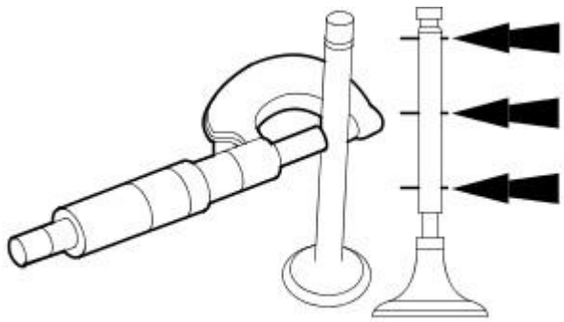

VUJ0002220

1. Using a micrometer measure the diameter of the valve stems.

- If the measurements are not to specification, install a new valve.

Published: 02-Jun-2011

Engine System - General Information - Leakage Test Using Smoke Test Equipment

General Procedures

CAUTION: The compressed air line supply pressure must be between 3.5 and 12 bar (50 and 175 psi) for the smoke test equipment to function correctly. Do not exceed this pressure. Failure to follow this instruction may result in damage to the smoke test equipment.

• NOTE: The vehicle battery must be in good condition and fully charged before carrying out this procedure.

• NOTE: On vehicles with 3.0L TDV6, it will be necessary to insert smoke at both air cleaner outlet pipes independently if the right hand turbocharger and associated hoses are to be tested.

• NOTE: In some cases it may be necessary to remove undertrays, trim or engine covers to obtain access to all potential leak locations.

• NOTE: Some variation in the illustrations may occur, but the essential information is always correct.

• NOTE: For further information regarding operation of the test equipment refer to the manufacturers operators manual supplied with the kit.

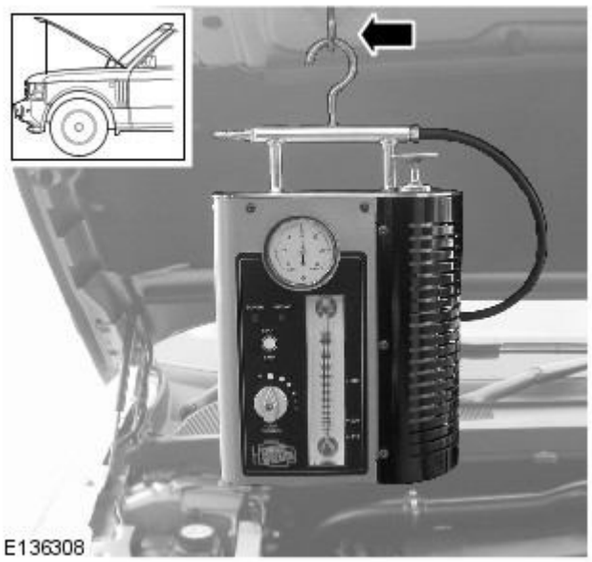

1. WARNING: Use an additional support to prevent the hood from falling if the smoke test equipment is secured to the hood. Failure to follow this instruction may result in personal injury.

Install the smoke test equipment to a suitable location under the hood.

2. Connect a suitable compressed air line to the smoke test equipment.

3. Connect the smoke test equipment positive power cable to the battery positive terminal.

4. WARNING: Do not connect the smoke test equipment negative cable to the battery negative terminal.

Connect the smoke test equipment negative cable to a suitable body ground point.

5. NOTE: A flashing green light indicates low battery voltage. In this case, place the battery on charge and make sure that the battery is fully charged before using the smoke test equipment.

Observe the power indicator lamp on the smoke test equipment. Make sure that a continuous green light is displayed.

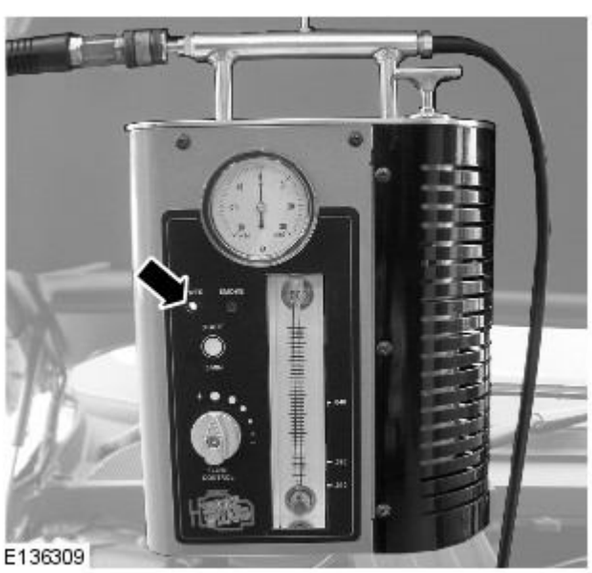

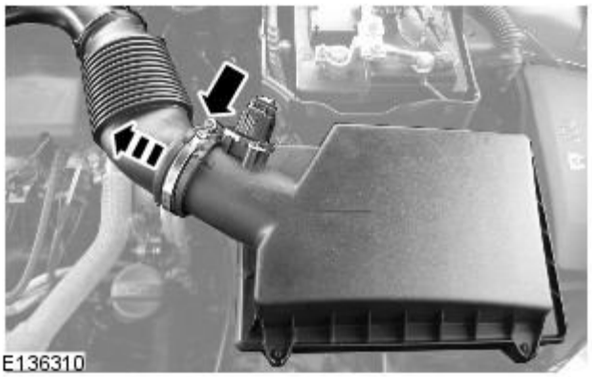

6. NOTE: In some cases it may be necessary to remove the air cleaner(s) to allow access to the air cleaner outlet pipes.

• NOTE: In some cases it will be necessary to cap one of the air cleaner outlet pipes. Use the blanking caps supplied in the kit to cap the open orifice.

Disconnect the air cleaner outlet pipe(s).

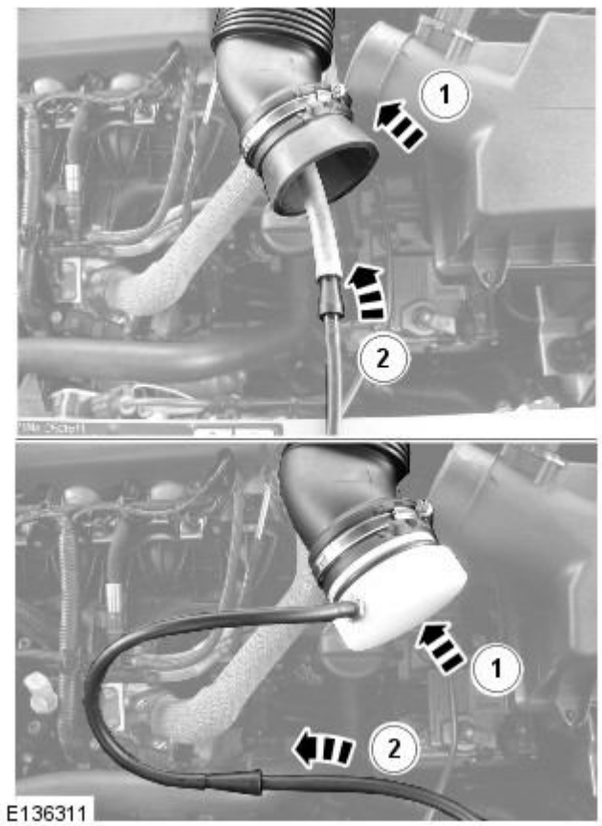

7. NOTE: Make sure the smoke test equipment adapter is a good fit to the air cleaner outlet pipe. This must be an air tight seal.

Connect the smoke test equipment supply hose to the air cleaner outlet pipe.

1. Install the appropriate adapter to the air cleaner outlet pipe.
2. Connect the smoke test equipment supply hose to the adapter link hose.

8. NOTE: The flow control valve must be in the fully open position.

• NOTE: Smoke is produced for 5 minutes. The smoke test equipment will automatically switch off after this period of time.

Switch the smoke test equipment on.

9. Remove the oil filler cap, and observe until a constant flow of smoke is visible leaving the oil filler orifice. Install the oil filler cap.

10. NOTE: The longer smoke is allowed to exit from a leak, the more fluorescent dye will be deposited at a leak location.

Using the torch supplied in the kit set to white light, look for escaping smoke. Alternatively, use the ultraviolet light to look for fluorescent dye deposits at the source of a leak.

Engine -

Torque Specifications

Description	Nm	lb-ft	lb-in
Accessory drive belt idler pulley retaining bolt	45	33	-
Accessory drivebelt tensioner retaining bolt	40	30	-
Air conditioning compressor retaining bolts	25	18	-
Camshaft bearing caps retaining bolts	10	7	-
Camshaft position sensor retaining bolt	7	-	62
Connecting rod retaining bolts	A	-	-
Crankshaft pulley retaining bolt	377	278	-
Crankshaft position sensor retaining bolt	10	7	-
Cylinder head retaining bolts	A	-	-
Drive plate retaining bolts	A	-	-
Engine front cover retaining bolts	13	10	-
Engine mounting bracket retaining bolts	40	30	-
Engine mount upper retaining nut	55	40	-
Engine mount lower retaining bolt	55	40	-
Engine mount bracket to engine mount retaining nuts	63	46	-
Engine wiring harness retaining bracket	10	7	-
Exhaust manifold retaining bolts	25	18	-
Flexplate retaining bolts	A	-	-
Front engine cover retaining bolts	12	9	-
Generator lower retaining bolt	40	30	-
Generator upper retaining bolt	21	15	-
Generator lower retaining bolt	40	30	-
Generator mounting bracket retaining bolts	45	33	-
Ignition coil retaining bolts	5	-	44
Intake manifold assembly retaining bolts	22	16	-
Intake camshaft sprocket retaining bolt			
Stage 1	20	15	-
Stage 2	+ 90°	+ 90°	-
Intercooler retaining bolt	12	9	-
Knock sensor retaining nuts	20	15	-
Lower cylinder block to the upper cylinder block retaining bolts	A	-	-
Oil cooler pipes to oil sump retaining bolt	18	13	-
Oil level indicator tube retaining nut	6	-	51
Oil pan retaining bolts	12	9	-
Oil pump to engine block retaining bolts	12	9	-
Oil pan drain plug	25	18	-
Oil separator retaining bolts	12	9	-
Oil filter	18	13	-
Piston cooling jet retaining bolt	9	-	80
Power steering bracket bracket retaining bolts	25	18	-
Power steering pump retaining bolts	25	18	-
Primary timing chain tensioner retaining bolts	12	9	-
Primary timing chain tensioner guide retaining bolts	12	9	-
Secondary timing chain tensioner retaining bolts	12	9	-
Spark plugs	27	20	-
Starter motor retaining bolts	45	33	-
Supercharger retaining bolts	20	15	-
Thermostat housing retaining bolts	10	7	-
Throttle elbow retaining bolts (SC)	20	15	-
Water pump retaining bolts	A	-	-
Water pump pulley retaining bolts	A	-	-
Upper oil pan retaining bolts	21	15	-
Valve cover retaining bolts	10	7	-
Variable camshaft timing (VCT) oil control unit housing retaining bolts	22	16	-
VCT sprocket centre retaining bolt			
Stage 1	20	15	-
Stage 2	+ 90°	+ 90°	-
A = refer to the procedure for the correct torque sequence	-	-	-

Engine - Engine

Description and Operation

Cylinder Block

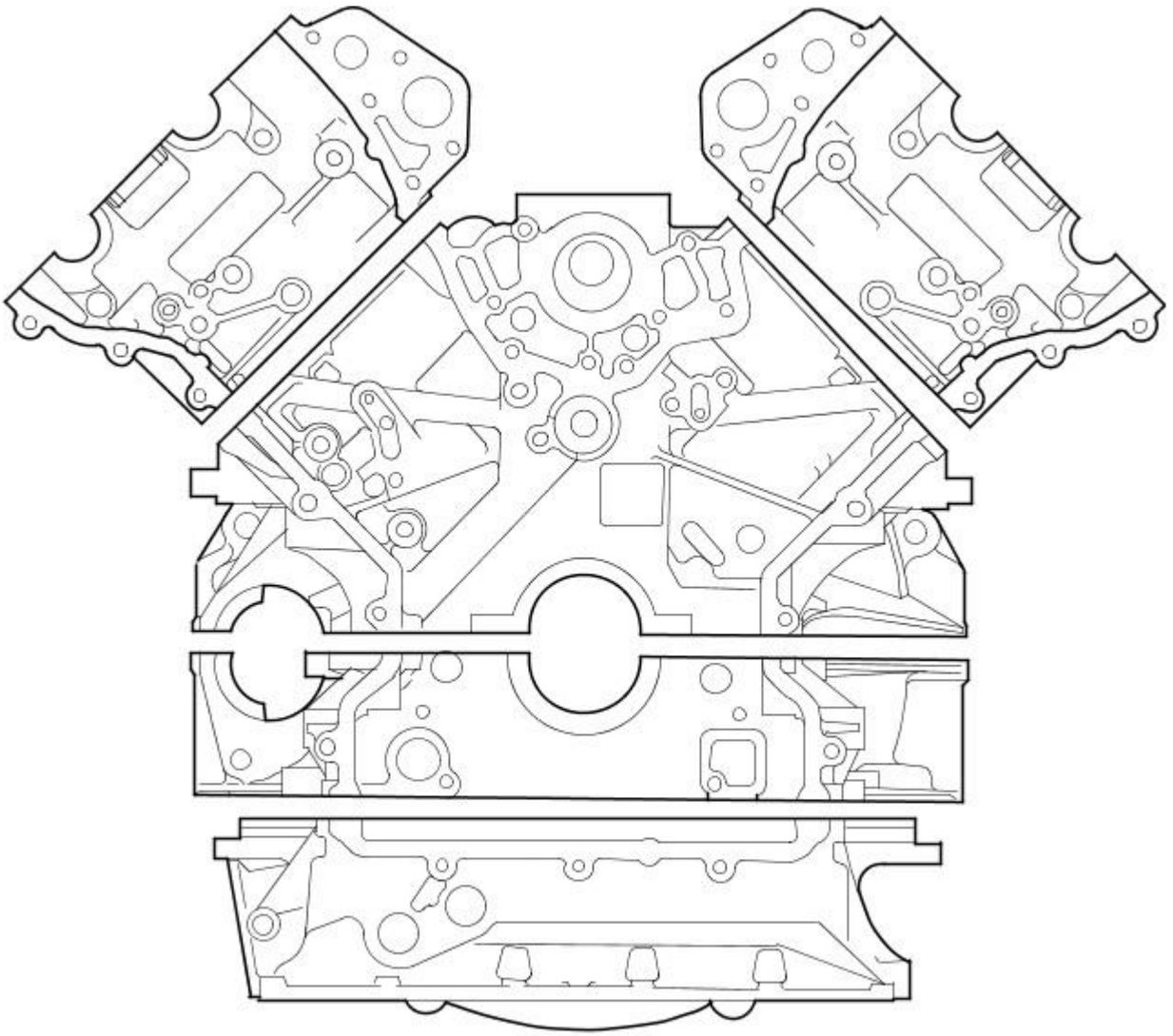

E31285

The 4.2L engine consists of an eight cylinder 90 degree 'Enclosed V' configuration liquid cooled aluminium cylinder block with dry cast liners

Viewed from the driving position, the right-hand cylinder bank is designated A-bank and the left-hand cylinder bank as B-bank.

Cylinder Block Drain Plug

The coolant drain plug is located on the rear left side of the cylinder block.

On vehicles supplied with a cold climate package (i.e. vehicles operating in conditions regularly below -30°C) a cylinder block heater unit is fitted instead of the drain plug.

Knock Sensors

Two knock sensors are fitted to the cylinder block on the inboard side of each cylinder bank. The electrical connector of each sensor is secured to the left-hand engine cover bracket.

These piezo-electric sensors provide inputs to the ECM to indicate the detection and location of detonation during combustion.

Crankshaft

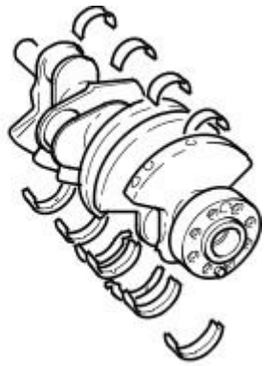

E31286

The cast iron crankshaft has undercut and rolled fillets for improved strength and six counter-balance weights make sure low levels of vibration from the four throw, five bearing configuration.

The main bearing shells are aluminium/tin split plain type. An oil groove in the top half of each bearing transfers oil into the crankshaft oilway drillings for lubrication of the connecting rod bearings. A lead/bronze thrust washer is fitted on each side of the top half of the center main bearing.

The crankshaft rear oil seal is lipped and is a press fit in the interface of the bedplate to cylinder block.

A torsional vibration crankshaft damper pulley is bolted to the front of the crankshaft.

Connecting Rods and Pistons

E31287

The connecting rods are manufactured from sinter-forged steel and have fracture-split bearing caps. The opposing sides of each connecting rod being fractured at the bearing horizontal center line.

The cylinder position is etched on adjoining sides of the joint to identify matching connecting rods and bearing caps. The connecting rod bearing shells are lead/bronze, split plain bearings.

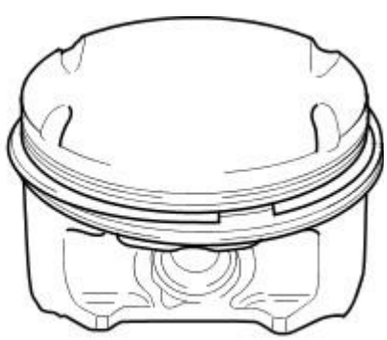

E31288

The pistons are open ended skirt design with small recesses for valve clearance and flat upper surfaces to reduce heat absorption. Three piston rings, two compression and one oil control, are fitted to each piston. Each piston is fitted on a gudgeon pin which is in a lead/bronze bush fitted in the connecting rod.

Timing Gear

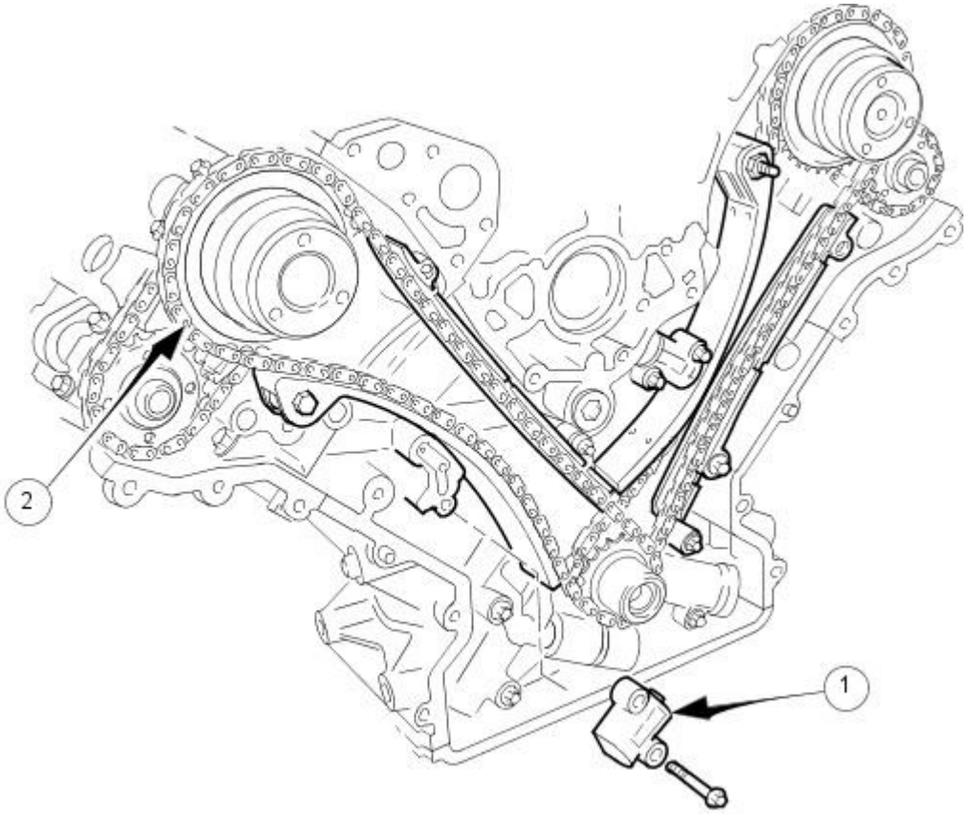

E31289

Item	Part Number	Description
1	—	Primary chain tensioner
2	—	Primary chain

Multi link primary and single link secondary chains drive the camshafts of each cylinder bank. The primary chains transmit the drive from sprocket on the crankshaft to a sprocket on each intake camshaft. The secondary chains transmit the drive from a second, smaller sprocket on the intake camshaft to a sprocket on the exhaust camshaft.

Each chain has a hydraulic tensioner operated by the engine lubricating system. A jet of oil from the end of each tensioner lubricates the chains. The primary chain tensioners act on pivoting flexible tensioner blades, the secondary chain tensioners act directly on the chains.

A woodruff key locates the drive sprocket on the crankshaft and these are retained in position by the crankshaft damper pulley.

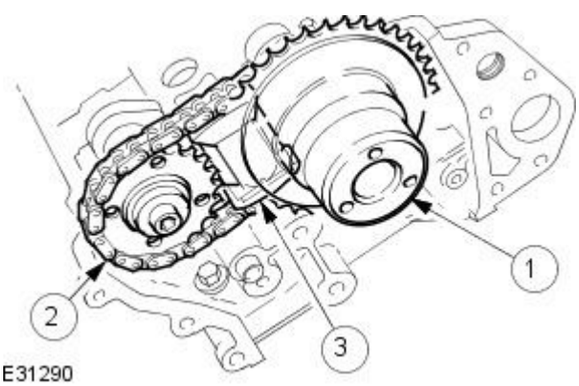

E31290

Item	Part Number	Description
1	—	Variable valve timing unit
2	—	Secondary chain
3	—	Secondary chain tensioner

The variable valve timing units and the exhaust camshaft sprockets are non-interference. They are clamped in place on the camshafts by the retaining bolt and clamping plate/washer.

Timing Cover

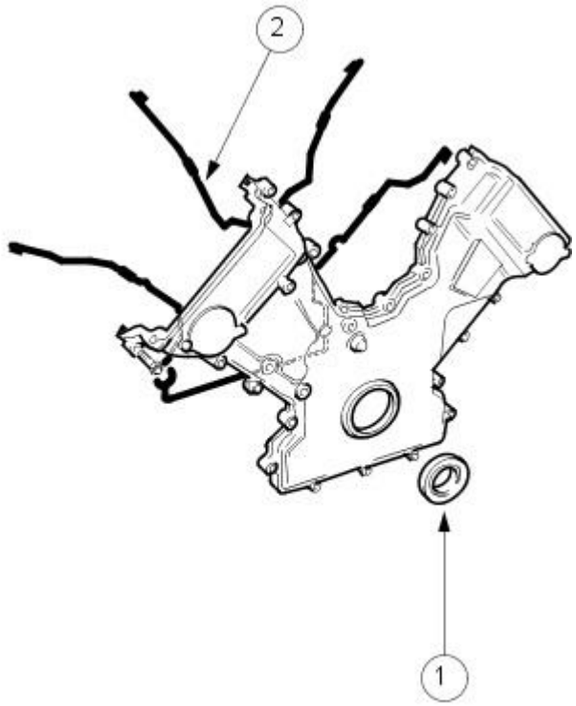

E31291

Item	Part Number	Description
1	—	Crankshaft front oil seal
2	—	Poly-acrylic seal

The aluminium-alloy timing cover accommodates the crankshaft front oil seal. Poly-acrylic seal in-groove gaskets seal the joint between the timing cover and the front face of the engine.

Cylinder Heads and Valve Gear

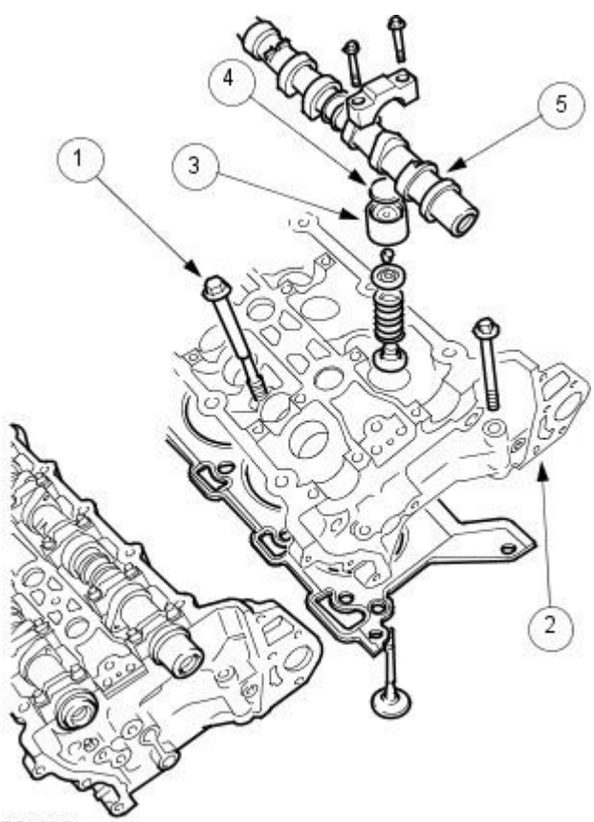

E31292

Item	Part Number	Description
1	—	Cylinder head bolt
2	—	Coolant outlet
3	—	Valve lifter
4	—	Adjustment shim
5	—	Camshaft

Cylinder heads are unique to each cylinder bank and are secured, using deep seated bolts, to the cylinder block. Two hollow dowels align each cylinder head with the cylinder block.

Each cylinder head gasket consists of a silicon beaded composite gasket with metal eyelets for the cylinder bores.

Each cylinder head incorporates dual overhead camshafts operating four valves per cylinder via solid aluminium-alloy valve lifters. A steel

shim in the top of each lifter allows adjustment of valve clearances .

Collets, valve collars and spring seats locate the valve springs on the intake and exhaust valves. Valve stem seals are integrated into the spring seats.

Four 14mm spark plugs are located in a recess on the center-line of each cylinder head. For additional information, refer to
For additional information, refer to Section 303-07 Engine Ignition.

Camshafts

The chilled cast iron camshafts are each retained by five aluminium alloy caps - location numbers 0 to 4 for the intake camshaft and 5 to 9 for the exhaust camshaft from the front.

A machined flat near the front of each camshaft enables the camshafts to be locked during the valve timing procedure.

Camshaft Sensor

The camshaft sensors are fitted to the rear of each cylinder head and are triggered by four toothed sensing rings fitted to the rear of the intake camshaft. The camshaft sensors are variable reluctance sensors that provides an input to the ECM of intake camshaft position.

Camshaft Covers

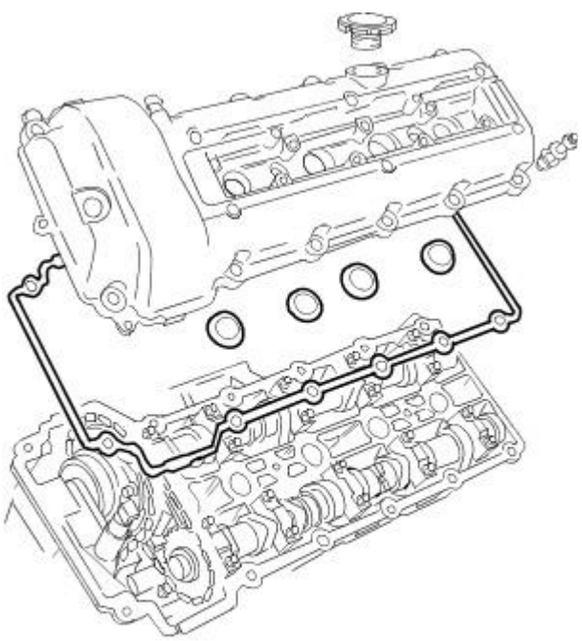

VUJ0001974

The valve covers are made from thermoplastic plastic; the right-hand bank cover incorporates an outlet for the part load engine breather.

The left-hand bank cover incorporates the engine oil filler cap and an outlet for the full load engine breather. Identical oil separators are incorporated inside the top of each cover. Each oil separator comprises a wire gauze packing in an open ended enclosure below the breather outlet.

Bedplate

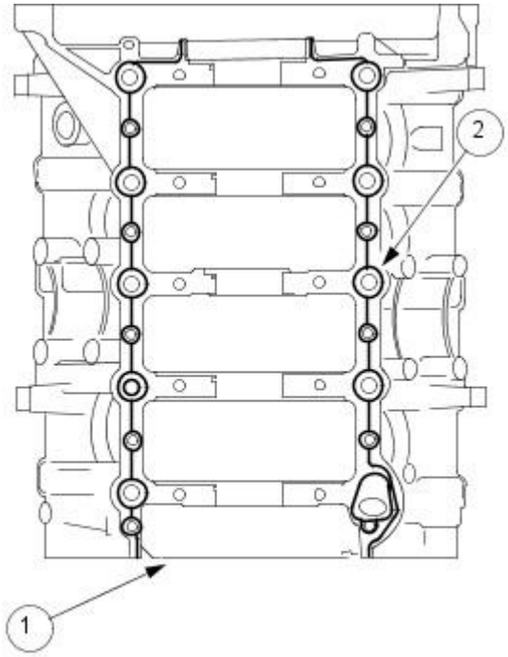

E31293

Item	Part Number	Description
1	—	Bedplate
2	—	Sealant track

This is a structural casting bolted to the bottom of the cylinder block to retain the crankshaft and to further improve overall rigidity.

Main bearing clearance changes due to expansion are minimized by means of iron inserts cast into the bedplate main bearing supports.

Two hollow dowels align the bedplate with the cylinder block and the joint is sealed by a continuous bead of sealant.

Engine Mountings

The engine is mounted at two points. At the front, on each side of the engine, there is a mounting bracket with a Hydramount mounted to the subframe.

Engine Lubrication

Oil is drawn from the reservoir in the oil pan and pressurized by the oil pump. The output from the oil pump is then filtered and distributed through the internal oil passages.

Where an oil cooler is fitted, the oil is cooled before entering the filter.

All moving parts are lubricated either by pressure or splash oil. Pressurized oil is also provided for operation of the variable valve timing units and the timing gear chain tensioners.

All of the oil system components are installed on the structural sump.

Oil is returned to the oil pan under gravity through large drain holes in the cylinder heads and the engine block to make sure quick return of the oil.

Oil Pick-Up

The plastic moulded oil pick-up is attached to the underside of the structural sump. It is immersed in the oil reservoir to provides a supply to the oil pump during all normal vehicle attitudes. A castellated inlet allows the supply to be maintained after any deformation of the sump pan (e.g. after grounding). A mesh screen in the inlet prevents debris from entering the oil system.

Oil Pressure Switch

Installed at the right front of the structural sump, the oil pressure switch connects a ground input to the instrument cluster when oil pressure is present. This switch operates at a pressure of 0,15 to 0,41 bar (2.2 to 5.9 lbf.in2).

Oil Pump

The oil pump is fitted at the front of the engine and is driven directly by the crankshaft. The inlet and outlet ports align with oil passages in the bedplate, with a rubber coated metal gasket to seal the pump to bedplate interface.

An integral pressure relief valve regulates pump outlet pressure at 4,5 bar (65.25lbf.in2).

Oil Pan

The oil pan/sump comprises an aluminium-alloy structural sump bolted to the bedplate and a pressed steel pan with integral sump plug, bolted to the structural sump.

Oil Filler Cap

The oil filler cap is located on the top of the left-hand bank valve cover.

Windage Tray

A windage tray attached to the top of the structural sump isolates the oil pan from the disturbed air flow, caused by the rotation of the crankshaft; preventing oil aeration and improving oil drainage.

Crankcase Ventilation

The engine is ventilated through a part-load and a full-load breather; one on each valve cover. These flexible plastic hoses incorporate O-ring seals and quick release connectors.

The part-load breather ventilates the left-hand valve cover (left-hand bank) and feeds onto the throttle body adaptor and the purge valve. This breather is connected between the oil separator in the cover and the induction elbow.

The full-load breather ventilates the right-hand cover (right-hand bank) and is connected between the oil separator in the cover and the air intake duct between the mass air flow (MAF) sensor and the throttle body.

The MAF sensor unit combines the two sensors: one for air flow and one for air inlet temperature. It is a hot wire sensor that provides an input which is (approximately) proportional to the mass air flow into the engine.

Each valve cover oil separator consists of wire gauze packed into an open ended enclosure in the top of the cover, below the breather outlet.

Ignition System

The 14mm spark plugs, one per cylinder, locate in recesses along the center-line of each cylinder head. The on-plug ignition coils are secured to the valve covers.

Variable Valve Timing (VVT)

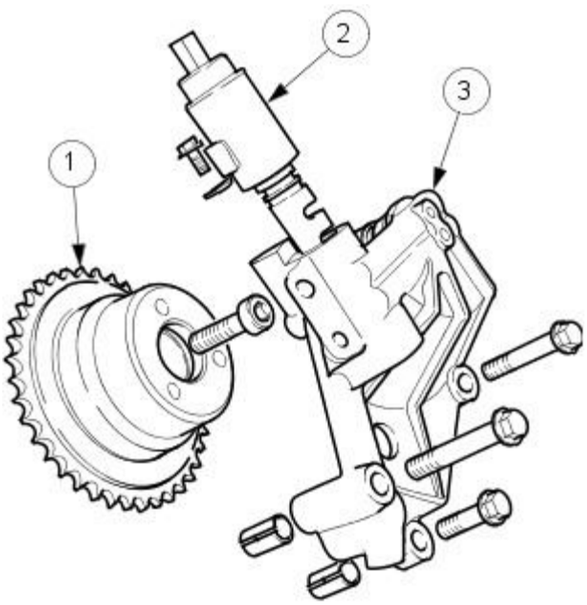

E31298

Item	Part Number	Description
1	—	Variable valve timing (VCT) oil control unit
2	—	Variable valve timing (VCT) oil control solenoid
3	—	Bush carrier

The variable valve timing system improves both low speed and high speed engine performance, engine idle quality and exhaust emissions. It is an infinitely variable system operating on the intake camshafts only. There is the equivalent of 48º of crankshaft movement between the retarded and advanced positions. Engine oil pressure operates the system under the control of the ECM.

www.JagDocs.com

Published: 11-May-2011

Engine - Engine

Diagnosis and Testing

For additional information, refer to Section 303-00 Engine System - General Information

Engine - Valve Clearance Adjustment

General Procedures

Special Tool(s)	
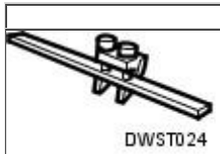 DWST024	Tappet hold down tool 303-540
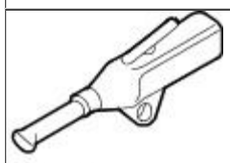 DWST074	Fan nozzle, air gun 303-590

1. Remove the left-hand valve cover. For additional information, refer to: (303-01)

2. Remove the right-hand valve cover. For additional information, refer to: (303-01)

3. Use a cloth to wipe away as much oil as possible from the tappet and shim.

4. CAUTIONS:

Rotating the crankshaft in a counterclockwise direction may cause engine damage. Crankshaft journals are directionally machined. Rotating the crankshaft counterclockwise can raise burrs on bearing surfaces, reducing engine life.

Camshaft lobes must be 180 degrees away from each valve tappet or the valve clearance will be incorrect.

Rotate the engine clockwise to position the camshaft lobe away from the shim surface.

5. Install the base plate of the valve clearance adjusting tool to the relevant cylinder head using the bolts supplied.

- Secure the tool to the valve cover retaining holes.

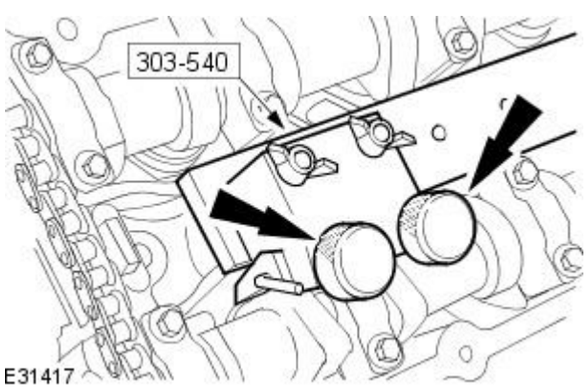

6. CAUTION: Do not rotate the crankshaft while the attachment is installed to the base plate.

Install the attachment of the tool to the base plate to remove the relevant shims.

1. Adjust the fingers of the attachment to the highest position.
2. Install the attachment to the base plate.
3. Tighten the retaining screws to secure the attachment to the base plate.

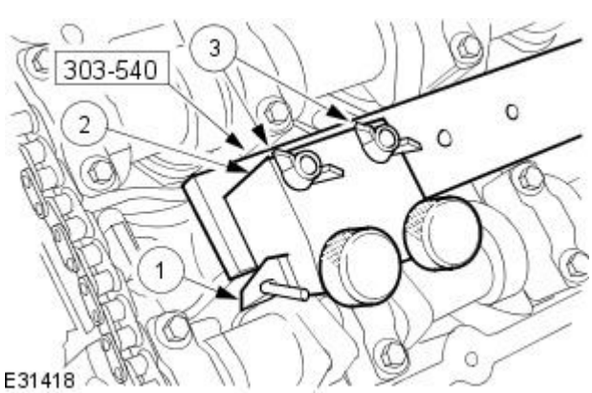

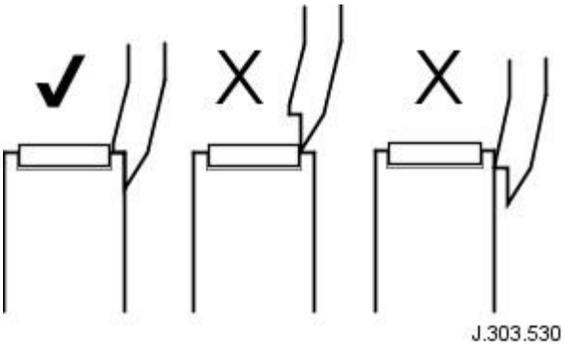

7. NOTE: Use a mirror to help locating the fingers of the special tool as access is restricted.

Position the fingers on the outer edges of the tappet. Make sure the recessed step on each finger locates on the edge of the tappet.

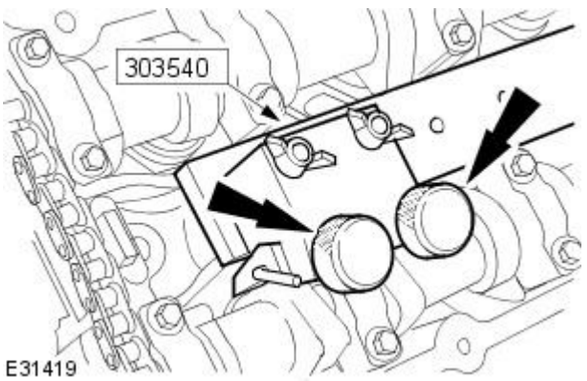

8. Tighten the special tool to compress the valve springs.

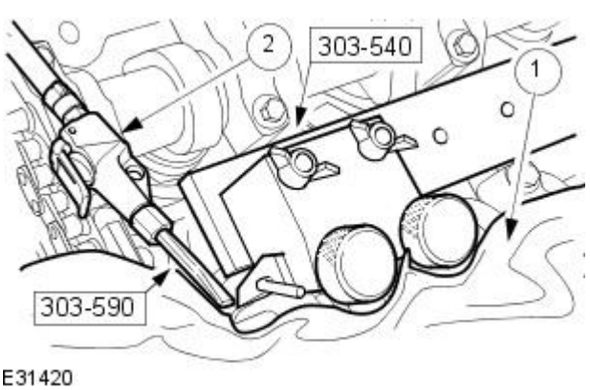

9. WARNING: The following operations require the use of compressed air. Always wear suitable eye protection.

CAUTION: Do not use a magnet to remove shims. Failure to follow these instructions may result in damage to the vehicle.

Remove, clean and measure the shim.

1. Surround the immediate working area with a cloth to retain any loose shims displaced by the compressed air.
2. Use special tool aimed at the edge of the shim to lift it from the tappet. Remove the shim from each tappet, noting the position of each one.

10. NOTE: Two shims within each procedure are possible to be replaced using the special tool.

Use the following formula to calculate the required shim thickness.

- Original shim thickness + measured shim clearance - desired clearance = required shim thickness.

11. CAUTION: Do not use a magnet to install shims. Failure to follow these instructions may result in damage to the vehicle.

• NOTE: Shims must be fitted with the size markings facing the tappet, not the camshaft.

Apply a light coat of engine oil to the replacement shim(s) and install.

12. Loosen the special tool to allow the valve springs to return to their normal position.

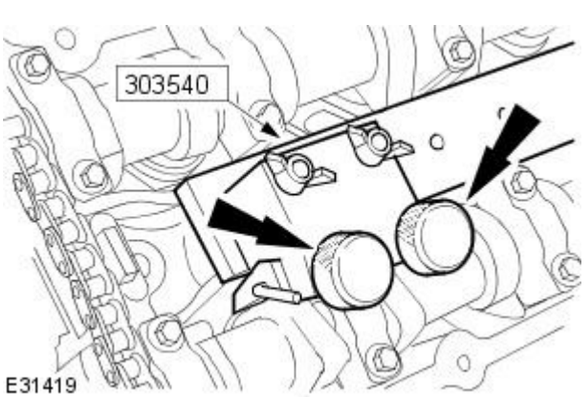

13. Using the feeler gauge set, measure the clearance between the camshaft and the shim surface. Record and check the readings.
For additional information, refer to: Valve Clearance Check (303-01

Engine, General Procedures).

14. When the valve clearance is correct, remove the attachment from the base plate and repeat the procedure for the following two valves to be adjusted.

15. Install the right-hand valve cover. For additional information, refer to: (303-01)

16. Install the left-hand valve cover. For additional information, refer to: (303-01)

Engine - Valve Clearance Check

General Procedures

1. Remove the left-hand valve cover. For additional information, refer to: (303-01)

2. Remove the right-hand valve cover. For additional information, refer to: (303-01)

3. CAUTIONS:

Rotating the crankshaft in a counterclockwise direction may cause engine damage. Crankshaft journals are directionally machined. Rotating the crankshaft counterclockwise can raise burrs on bearing surfaces, reducing engine life.

Camshaft lobes must be 180 degrees away from each valve tappet or the valve clearance will be incorrect.

Rotate the engine clockwise to position the camshaft lobe away from the shim surface.

4. Using the feeler gauge set, measure the clearance between the camshaft and the shim surface. Record and check the readings.
For additional information, refer to: Valve Clearance Check (303-01 Engine, General Procedures).
Adjust the clearances as necessary.

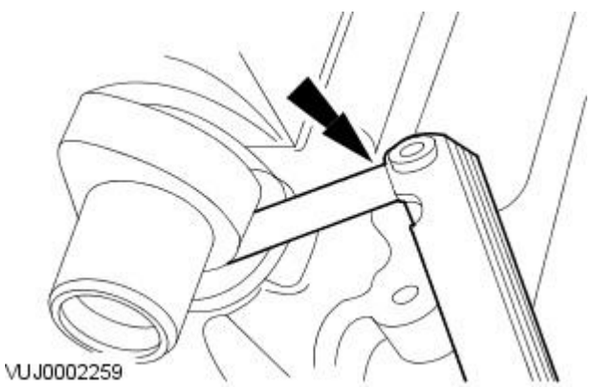

5. Install the right-hand valve cover. For additional information, refer to: (303-01)

6. Install the left-hand valve cover. For additional information, refer to: (303-01)

Engine - Camshafts LH

In-vehicle Repair

Special Tool(s)	
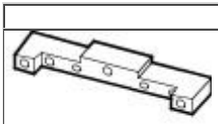 303-530	Camshaft setting 303-530
303-532	Timing chain tensioning tool 303-532
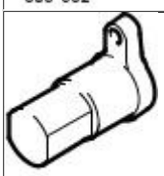 303-645	Crankshaft setting, main tool 303-645

Removal

All vehicles

1. Remove the engine front cover. For additional information, refer to: Engine Front Cover (303-01 Engine, In-vehicle Repair).
2. Remove the spark plugs.
3. Disconnect the crankshaft position sensor electrical connector.

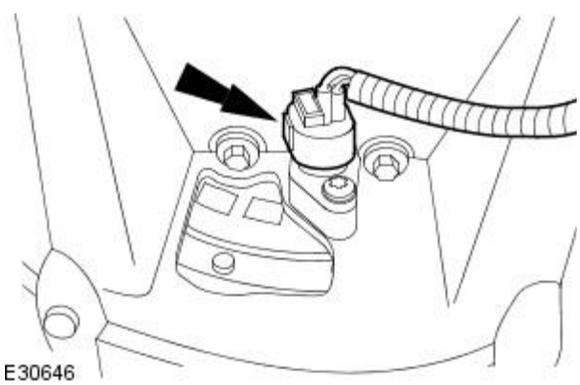

E30646

4. Remove the crankshaft position sensor.

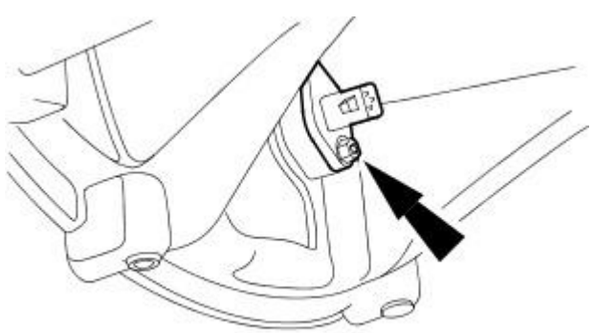

E30694

5. CAUTIONS:

Make sure the spark plugs are removed to enable the engine to rotate freely.

Do not rotate the crankshaft counterclockwise. The timing chains may bind causing engine damage.

Rotate the crankshaft clockwise to position the engine to 45° after top dead center (TDC) No. 1 cylinder

Install the special tool 303-645.

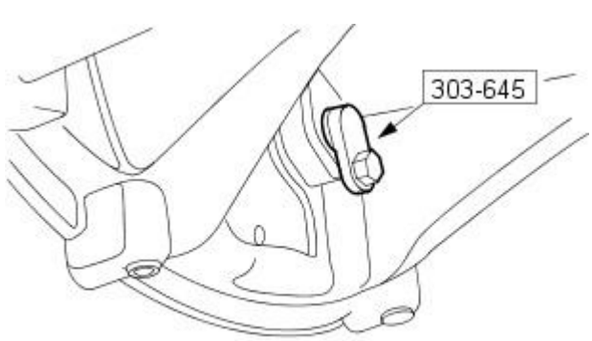

VUJ0002400

Vehicles without supercharger

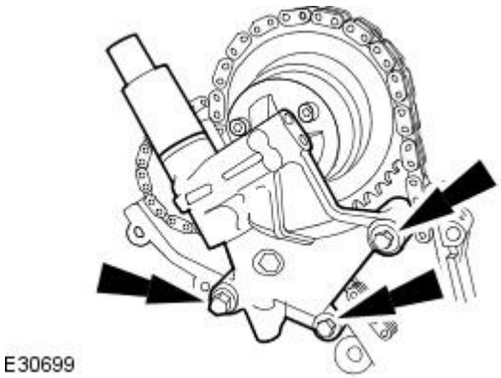
E30699

6. Remove the right-hand variable camshaft timing oil control unit housing.

- Remove and discard the O-ring seals.

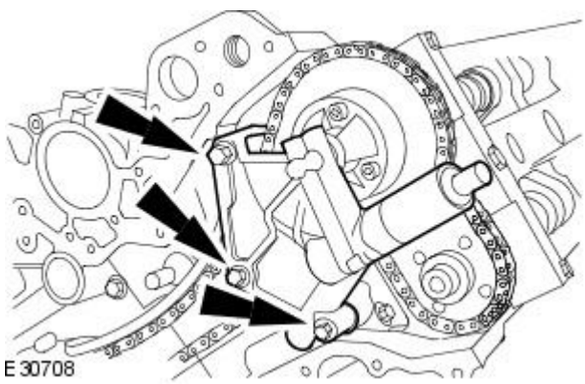
E30708

7. Remove the left-hand variable camshaft timing oil control unit housing.

- Remove and discard the O-ring seals.

All vehicles

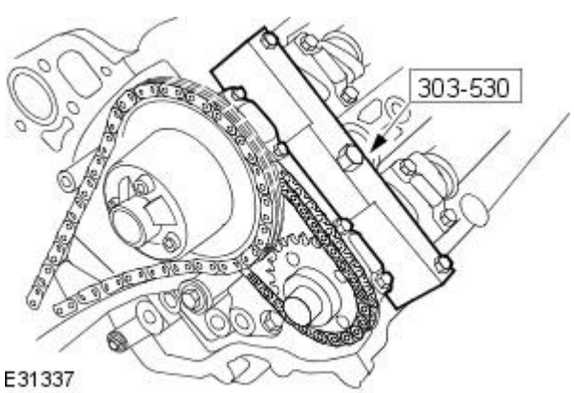

E31337

8. Install the special tool to the left-hand cylinder head.

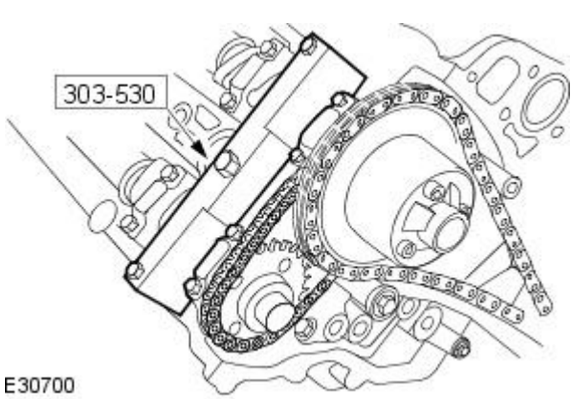

E30700

9. Install the special tool to the Right-hand cylinder head.

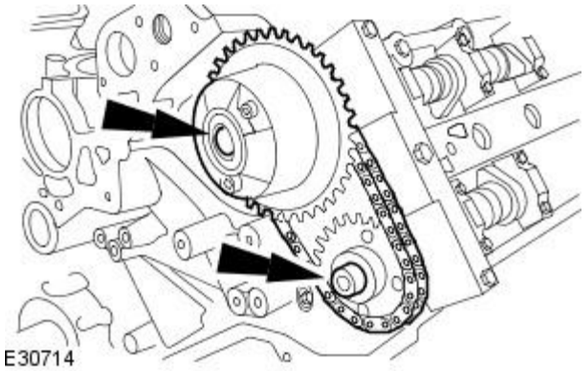

10. CAUTION: Make sure the secondary timing chain and camshaft sprockets are free to rotate.

Loosen the camshaft sprockets.

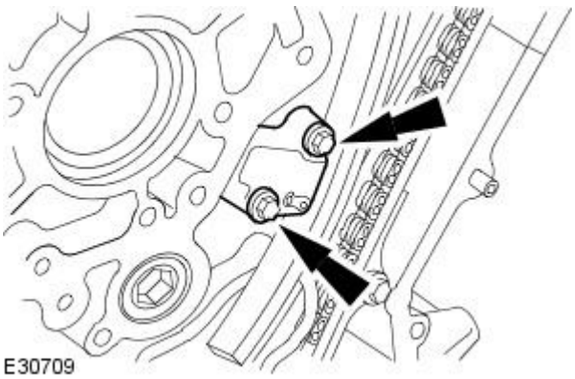

11. Remove the primary timing chain tensioner assembly.

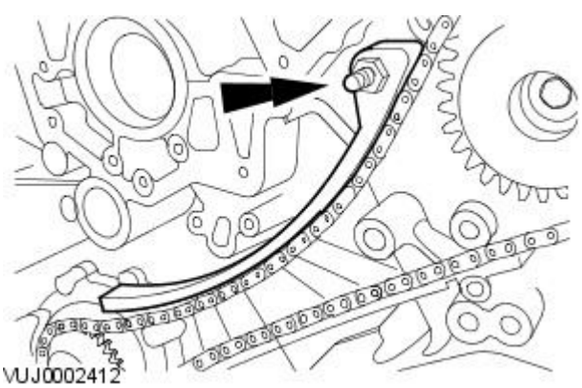

12. Remove the primary timing chain tensioner blade.

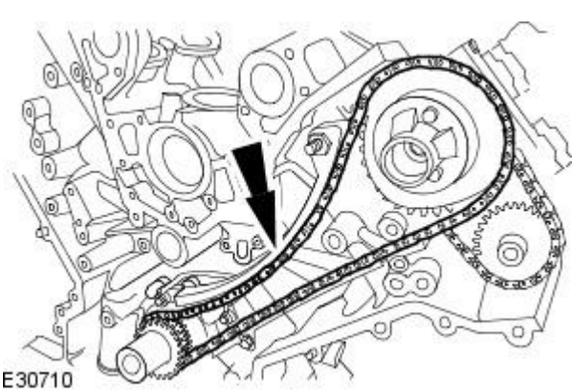

13. Remove the primary timing chain.

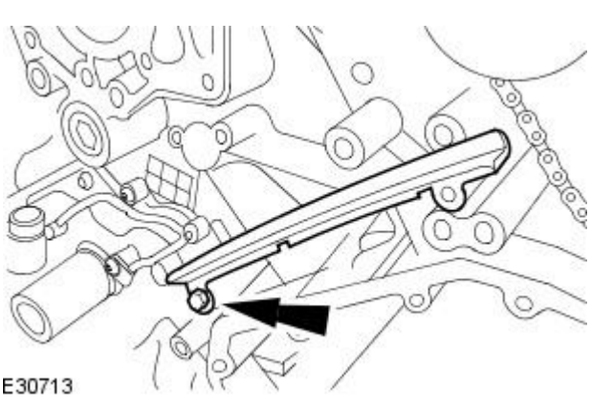

14. Remove the primary timing chain tensioner guide.

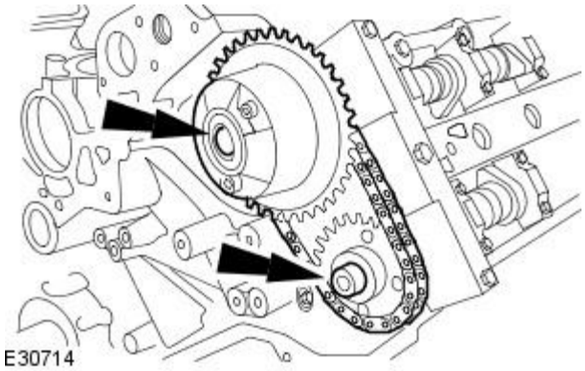

15. CAUTION: Discard the bolts.

Remove the camshaft sprockets.

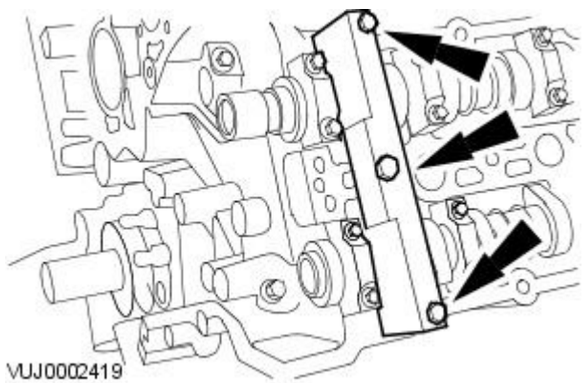

16. NOTE: Rotate the camshafts into the safe position.

Remove the special tool from the left-hand cylinder head.

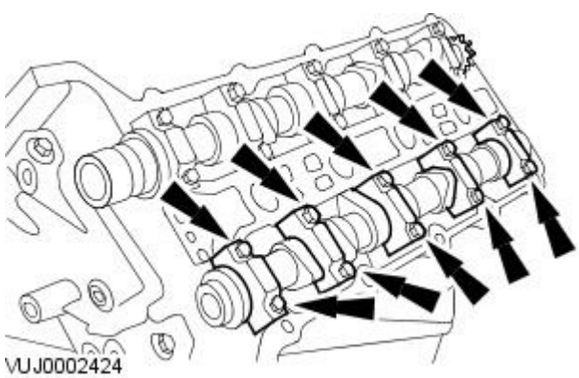

17. Remove the camshaft bearing caps.

- Remove the camshaft bearing cap retaining bolts evenly and in stages.
- Remove the camshaft bearing caps. Note their orientation and markings, each is marked with its position (a number) and orientation (an arrow).

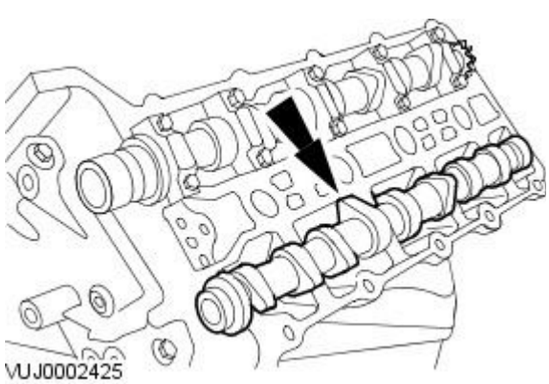

18. Remove the left-hand exhaust camshaft.

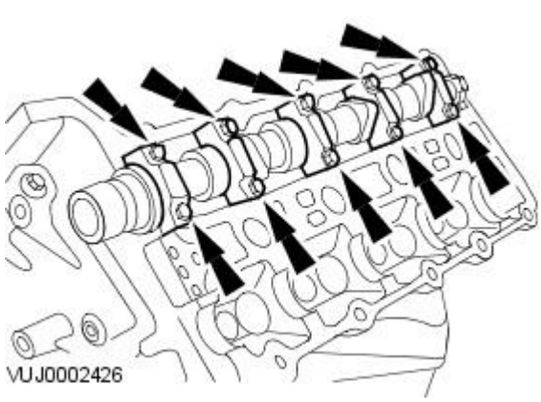

19. NOTE: Rotate the camshafts into the safe position.

Remove the camshaft bearing caps.

- Remove the camshaft bearing cap retaining bolts evenly and in stages.
- Remove the camshaft bearing caps. Note their orientation and markings, each is marked with its position (a number) and orientation (an arrow).

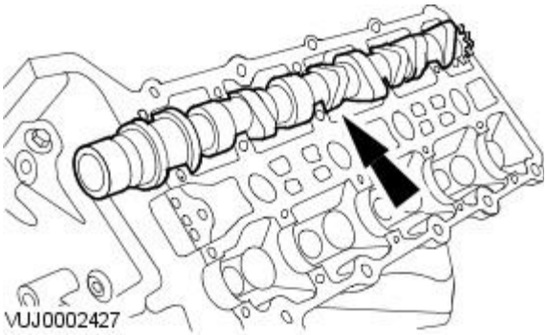

20. Remove the left-hand inlet camshaft.

Installation

All vehicles

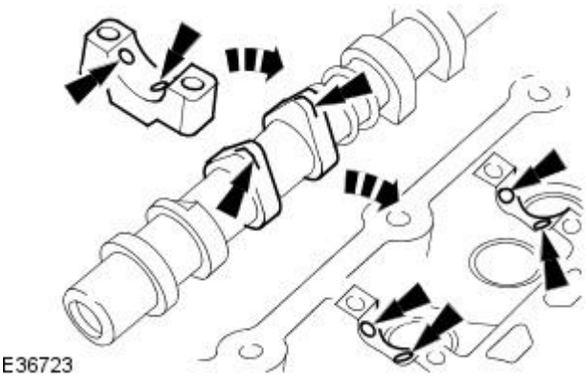

1. NOTE: Make sure all components are clean.

Apply oil (EP-90) to the camshaft and bearing surfaces, as follows:

- To the upper face of each bearing surface in the cylinder head.
- To the upper face of each bearing surface in each bearing cap.
- On the cam lobes ONLY, not on the base circle area.

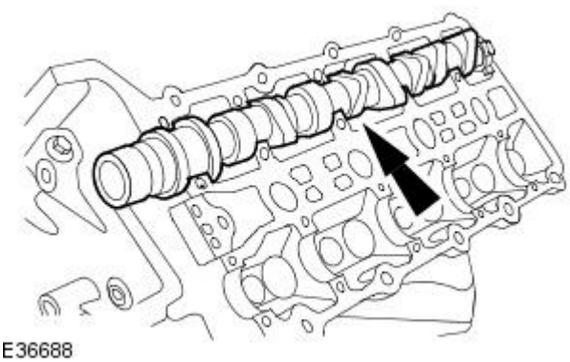

2. NOTE: Rotate the camshafts into the safe position.

Install the left-hand inlet camshaft.

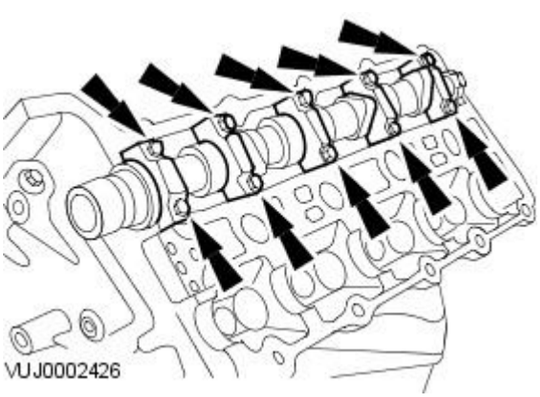

3. CAUTIONS:

Note the cam cap orientation and markings, each is marked with its position (a number) and orientation (an arrow).

Alternate bolt tightening to correctly seat the camshaft bearing caps.

Install the camshaft bearing cap bolts evenly.

- Tighten to 10 Nm.

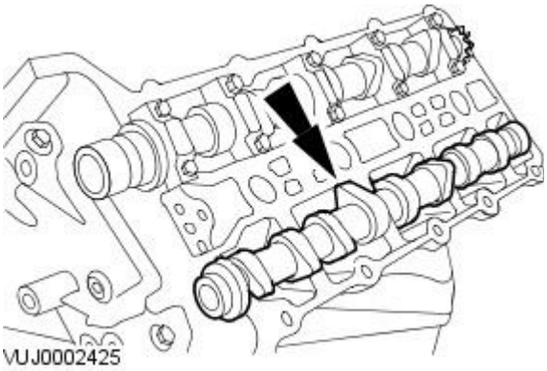

4. NOTE: Rotate the camshafts into the safe position.

Install the left-hand exhaust camshaft.

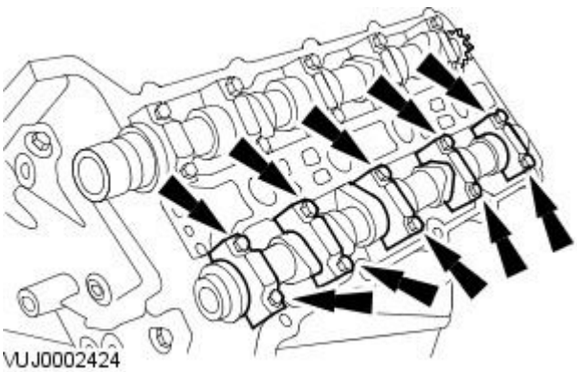

5. CAUTIONS:

Note their orientation and markings, each is marked with its position (a number) and orientation (an arrow).

Alternate bolt tightening to correctly seat the camshaft bearing caps.

Install the camshaft bearing cap bolts evenly.

- Tighten to 10 Nm.

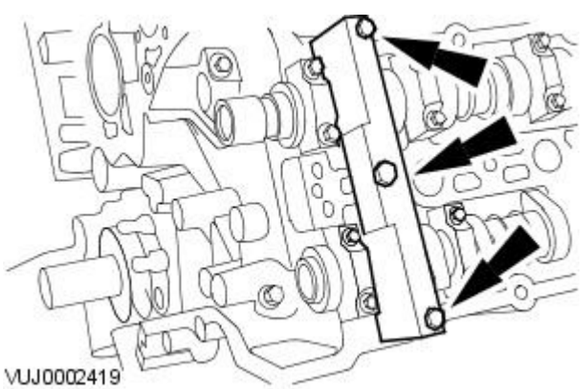

6. NOTE: Reposition the camshafts.

Install the camshaft setting tool.

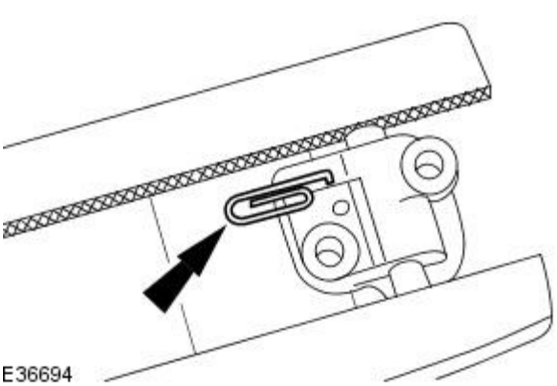

7. Using a suitable tool, retain the right-hand timing chain tensioner piston.

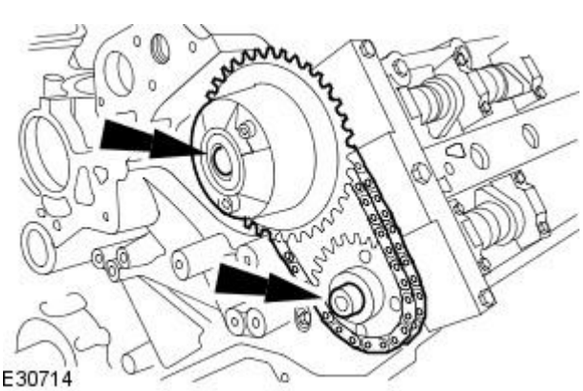

8. CAUTIONS:

Make sure the variable camshaft timing oil control unit is in the fully retarded position.

Do not tighten the camshaft sprocket retaining bolts.

Make sure the secondary timing chain and camshaft sprockets are free to rotate.

Install the camshaft sprockets.

- Install the secondary timing chain tensioner and secondary timing chain to the camshaft sprockets.

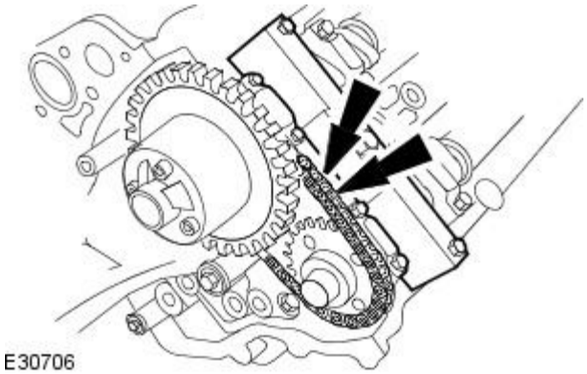

9. Install the secondary timing chain tensioner retaining bolts.

- Tighten to 12 Nm.

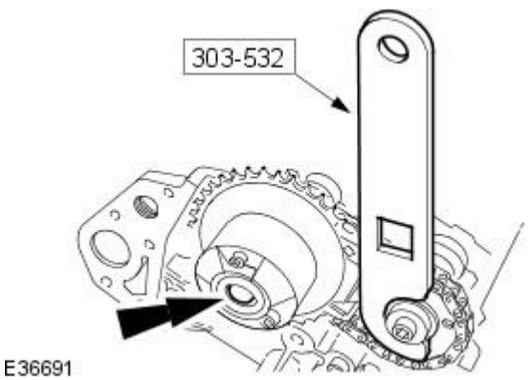

10. Install the timing chain tensioning tool 303-532 to the exhaust camshaft sprocket.

- Reposition the camshaft sprockets for the most advantageous position for use of the tool.

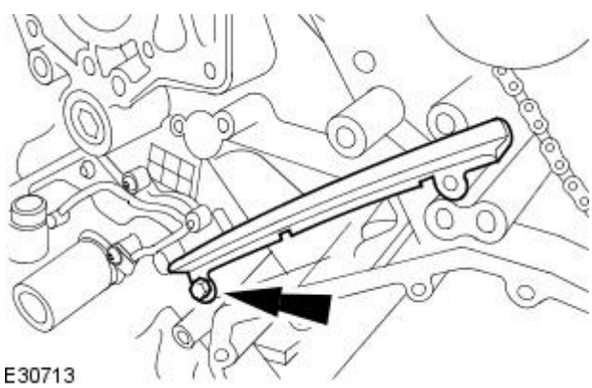

11. Install the primary timing chain tensioner guide.

- Tighten to 12 Nm.

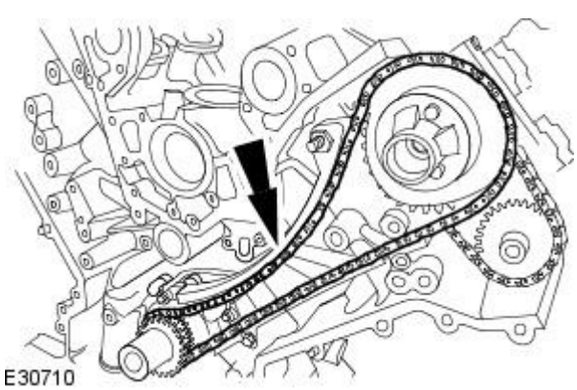

12. CAUTION: Make sure the timing chain slack is on the tensioned side of the timing chain.

Install the primary timing chain.

- Install the primary chain over the rear crankshaft sprocket and the intake sprocket.

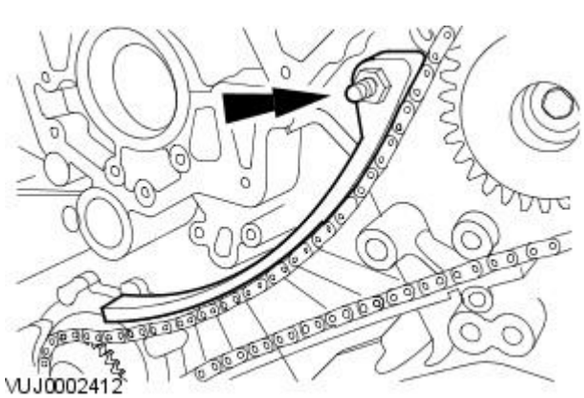

13. Install the primary timing chain tensioner blade.

- Tighten to 12 Nm.

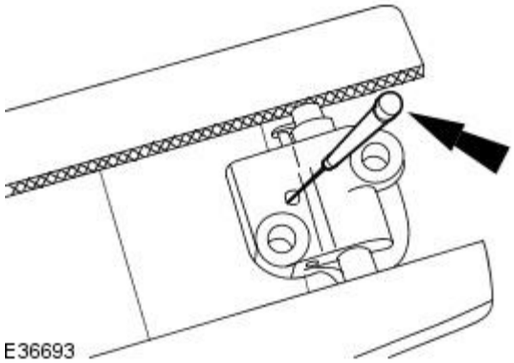

14. CAUTION: During timing chain tensioner compression, do not release the ratchet stem until the timing chain tensioner piston is fully bottomed in its bore or damage to the ratchet stem will result.

• NOTE: The retaining tool must remain in the timing chain tensioner until the timing chain tensioner is installed to the engine with the piston bottomed in the bore.

Using a suitable tool, hold the left-hand timing chain tensioner ratchet lock mechanism away from the ratchet stem.

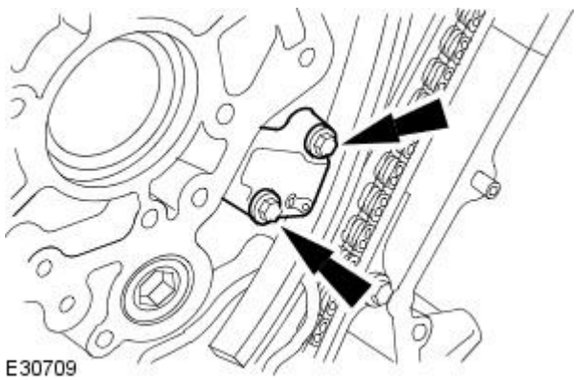

15. Install the primary timing chain tensioner assembly.

- Tighten to 12 Nm.

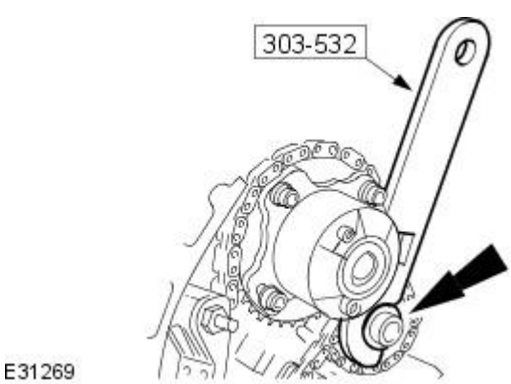

16. CAUTIONS:

While applying the opposing force to sprocket and chain, tighten the sprocket bolt.

Make sure that new bolts are installed.

Using the special tool apply force to the tool in an anti-clockwise direction to tension the primary timing chain on its drive side.

- Tighten to 20 Nm + 90°.

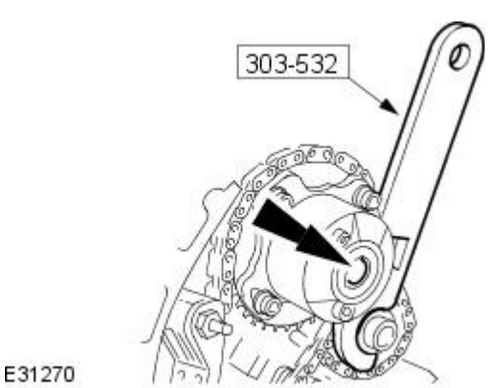

17. CAUTIONS:

While applying the opposing force to sprocket and chain, tighten the sprocket bolt.

Make sure that new bolts are installed.

Using the special tool apply force to the tool in an anti-clockwise direction.

- Tighten to 20 Nm + 90°.

18. Release the tension in the left-hand primary timing chain tensioner.

- Remove the retaining tool.

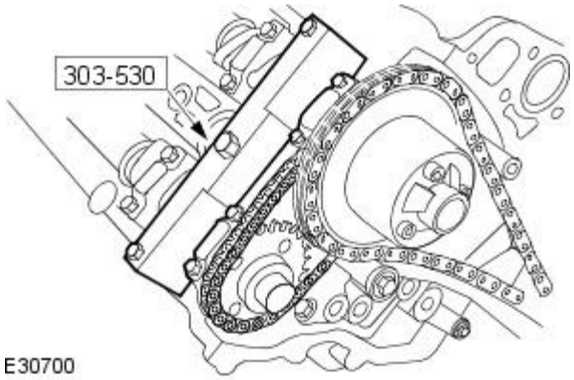

19. Remove the special tool from the right-hand cylinder head.

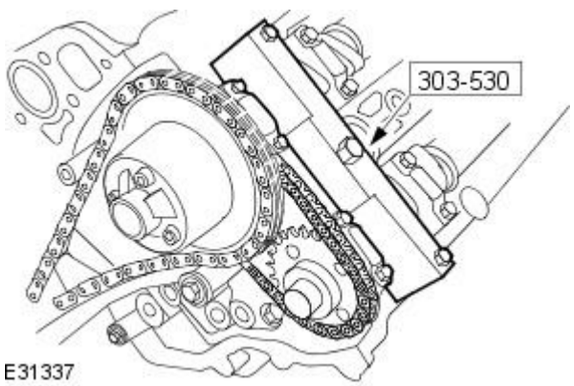

20. Remove the special tool from the left-hand cylinder head.

Vehicles without supercharger

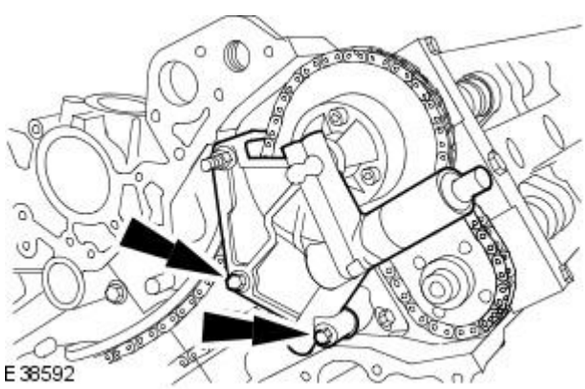

21. Install the left-hand variable camshaft timing oil control unit housing.

- Install new O-ring seals.
- Tighten to 22 Nm.

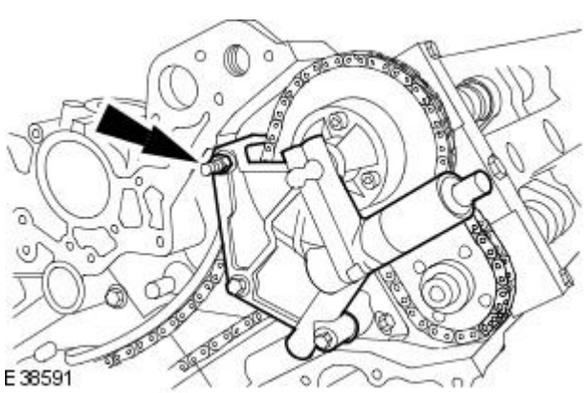

22. Tighten to 12 Nm.

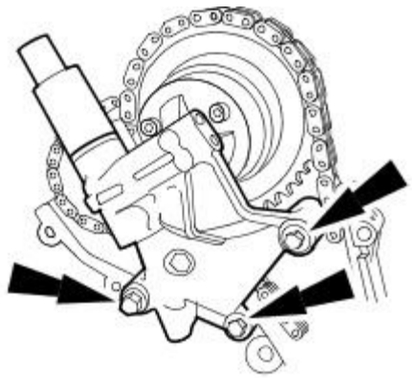

E30699

23. Install the right-hand variable camshaft timing oil control unit housing.

- Install new O-ring seals.
- Tighten to 22 Nm.

All vehicles

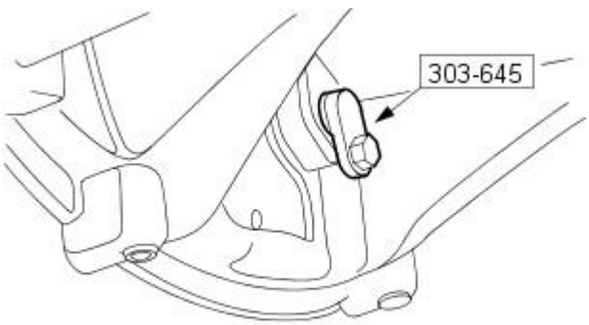

VUJ0002400

24. Remove the special tool.

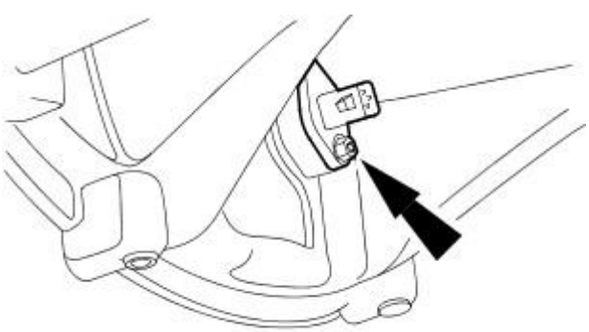

E30694

25. Install the crankshaft position sensor.

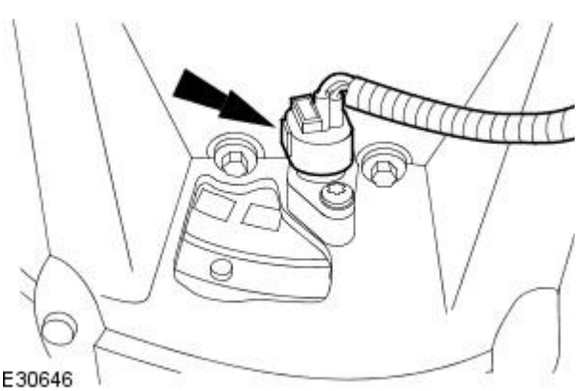

E30646

26. Connect the crankshaft position sensor electrical connector.

27. Install the spark plugs.

28. Install the engine front cover. For additional information, refer to: Engine Front Cover (303-01 Engine, In-vehicle Repair).

Engine - Crankshaft Front Seal

In-vehicle Repair

Special Tool(s)	
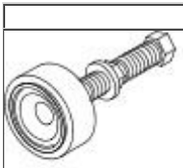 303-750	Installer, crankshaft front seal 303-750
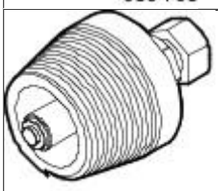 303-751	Remover, crankshaft front seal 303-751

Removal

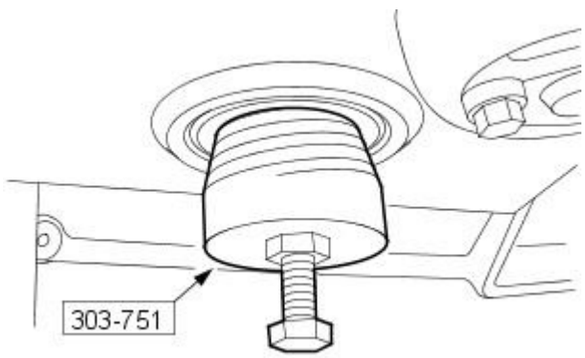

E31171

1. Remove the crankshaft pulley.
   For additional information, refer to Crankshaft Pulley in this section.
2. Using the special tool, remove the crankshaft front seal.

Installation

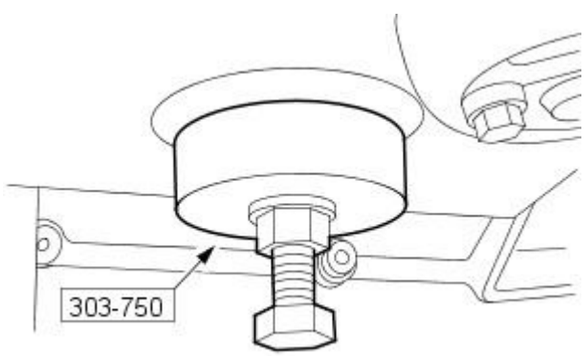

E31173

1. CAUTIONS:

   Make sure the crankshaft front seal mating faces are clean and dry.

   Do not remove the crankshaft front seal protector.

   Using the special tool, install the crankshaft front seal.

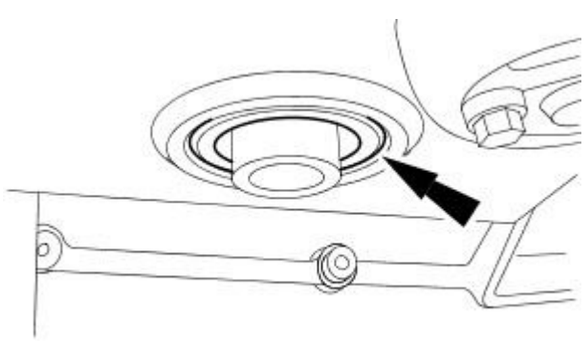

E31172

2. Remove the crankshaft seal protector.

3. Install the crankshaft pulley.
   For additional information, refer to Crankshaft Pulley in this section.

Engine - Crankshaft Pulley

In-vehicle Repair

Special Tool(s)	
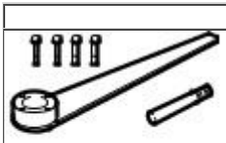 303-191	Locking Tool, Crankshaft Pulley 303-191
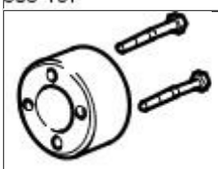 303-191-02	Adapter for 303-191/303-588 303-191-02
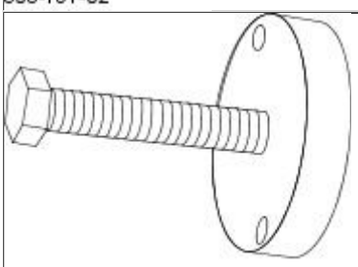 303-58	Remover, Crankshaft Pulley 303-588

Removal

1. Remove the cooling fan motor and shroud.
   For additional information, refer to: Cooling Fan Motor and Shroud (303-03A Engine Cooling, Removal and Installation).
2. Remove the accessory drive belt .
   For additional information, refer to: Accessory Drive Belt (303-05 Accessory Drive, Removal and Installation).
3. CAUTION: Under no circumstances should the crankshaft setting peg 303645 be used in the following operations to lock the crankshaft.

• NOTE: The crankshaft retaining bolt will be very tight.

Using special tools, retain the crankshaft pulley.

- Remove and discard the crankshaft pulley bolt.

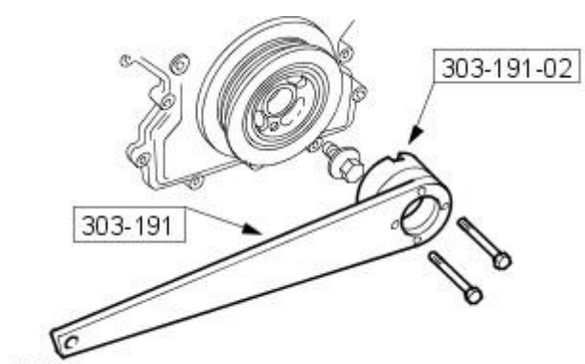

E31149

4. Remove the special tools.
5. NOTE: The crankshaft pulley will be very tight.

Using special tools, remove the crankshaft pulley.

- Collect the locking ring.
- Remove and discard the O-ring seal.

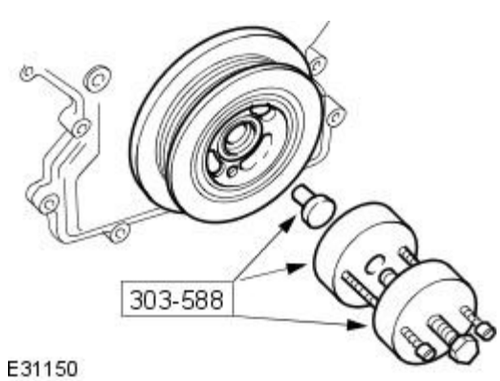

E31150

6. Remove the special tools.
7. Remove the crankshaft front seal.
   For additional information, refer to: Crankshaft Front Seal (303-01 Engine, In-vehicle Repair).

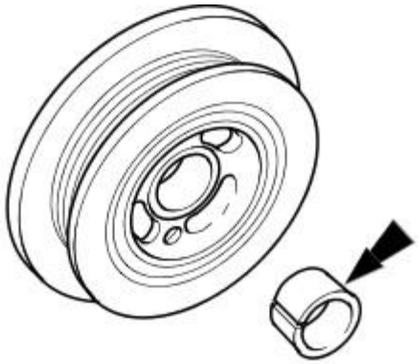

E31151

8. NOTE: Check crankshaft pulley and locking ring for damage.

Clean all crankshaft pulley mating faces.

Installation

1. Install a new crankshaft front seal.
For additional information, refer to: Crankshaft Front Seal (303-01 Engine, In-vehicle Repair).

2. Install a new O-ring seal to the crankshaft pulley.

- Lubricate the new O-ring.

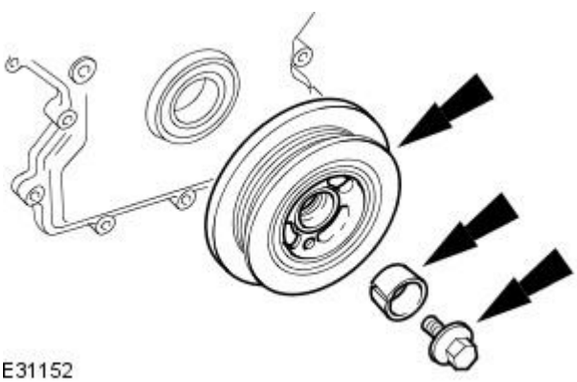

E31152

3. CAUTIONS:

The screw thread in the crankshaft must be cleaned out before a new crankshaft pulley bolt is installed.

A new crankshaft pulley bolt must be used.

Install, but do not tighten, a new crankshaft pulley retaining bolt.

- Install the crankshaft pulley and locking ring to the crankshaft.

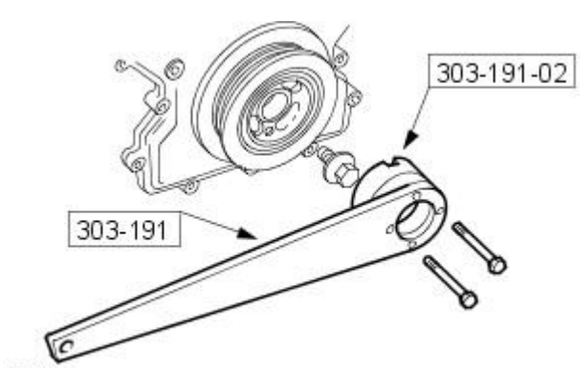

E31149

4. CAUTION: Under no circumstances should the crankshaft setting peg 303-645 be used in the following operations to lock the crankshaft.

Using special tools, retain the crankshaft pulley.

- Tighten the crankshaft pulley retaining bolt to 375 Nm.

5. Remove the special tools.

6. Install the accessory drive belt .
For additional information, refer to: Accessory Drive Belt (303-05 Accessory Drive, Removal and Installation).

7. Install the cooling fan motor and shroud.
For additional information, refer to: Cooling Fan Motor and Shroud (303-03A Engine Cooling, Removal and Installation).

Published: 11-May-2011

Engine - Crankshaft Rear Seal

In-vehicle Repair

Special Tool(s)	
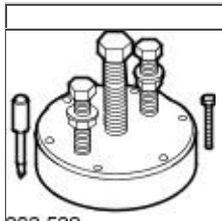 303-538	Crankshaft rear seal remover/replacer 303-538

Removal

1. Remove the flexplate.
   For additional information, refer to Flexplate in this section.
2. Install the special tool.

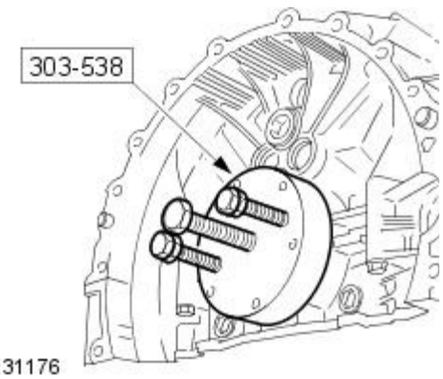

E31176

3. Reposition the special tool retaining nuts.

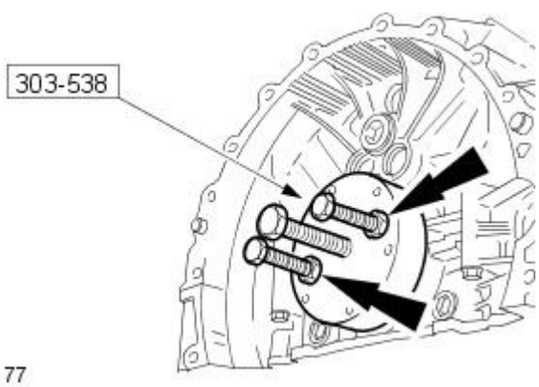

E31177

4. Using the special tool pierce the seal face and provide a pilot hole for the self-tapping screws.

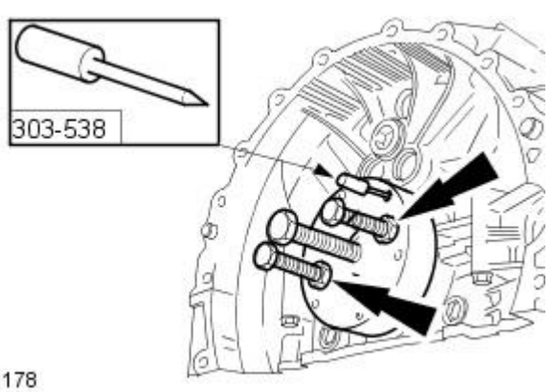

E31178

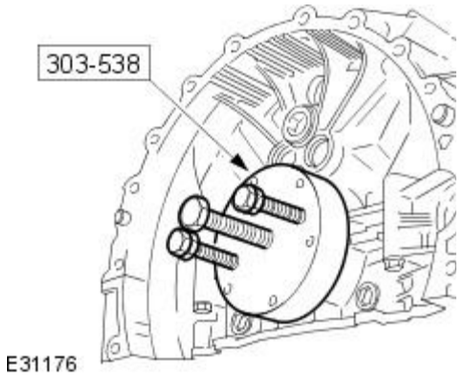

5. Loosen the special tool retaining nuts.

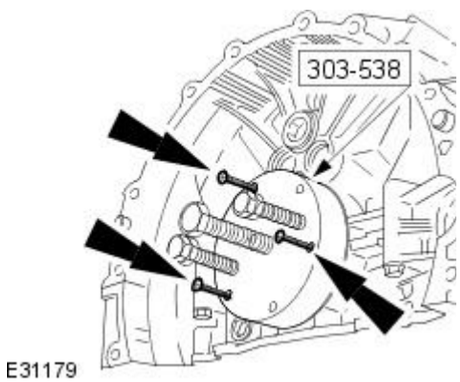

6. CAUTION: To prevent damage to special tool do not tighten screws more than one and a half turns.

Install the special tool self-tapping screws.

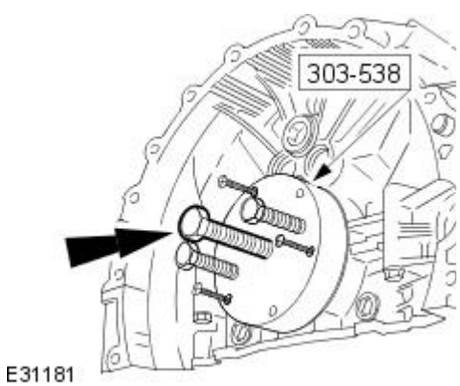

7. Using the special tool remove and discard the crankshaft rear seal.

Installation

1. NOTE: Make sure all components are clean and dry.

Make sure the transit sleeve is correctly in place and install the new seal over the crankshaft. Do not use any lubricant on the seal, the transit sleeve or the crankshaft.

2. Carefully remove the transit sleeve, leaving the seal in place.

3. Install the special tool to the crankshaft.

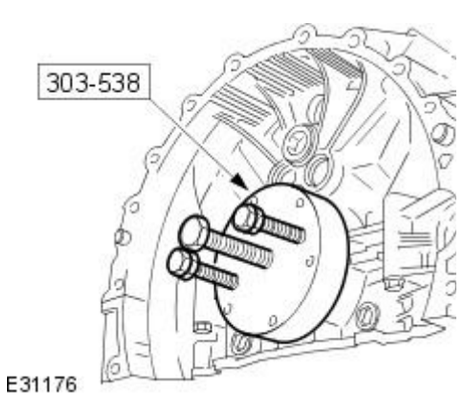

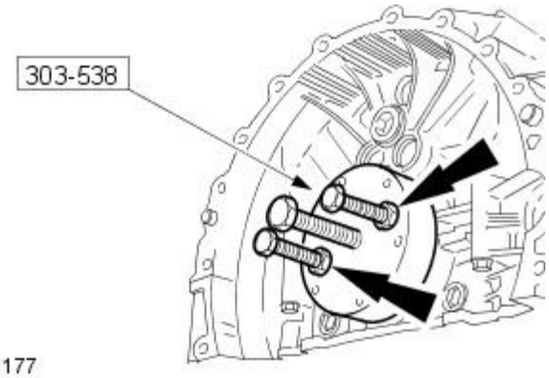

E31177

4. Reposition the nuts to hold the special tool against the crankshaft rear seal. Check that the crankshaft rear seal and the special tool are parallel to the rear of the engine.

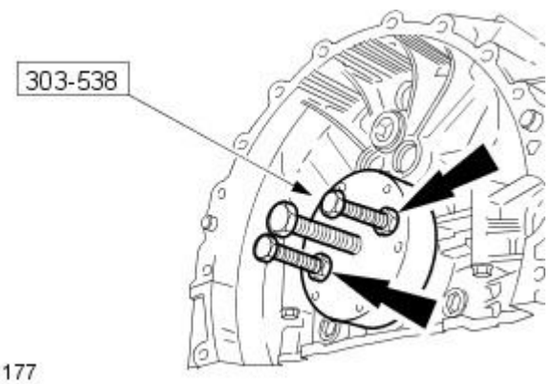

E31177

5. CAUTION: Alternate nut tightening to correctly seat the crankshaft rear seal.

Using the special tool, install the crankshaft rear seal.

6. Remove the special tool from the crankshaft.

- Check that the seal is located correctly.

7. Install the flexplate.
For additional information, refer to Flexplate in this section.

Engine - Cylinder Head LH

In-vehicle Repair

Removal

CAUTION: If a replacement cylinder head is to be installed to a vehicle with variable camshaft timing (VCT) the cylinder head must have the oil gallery blind rivet removed before installation.

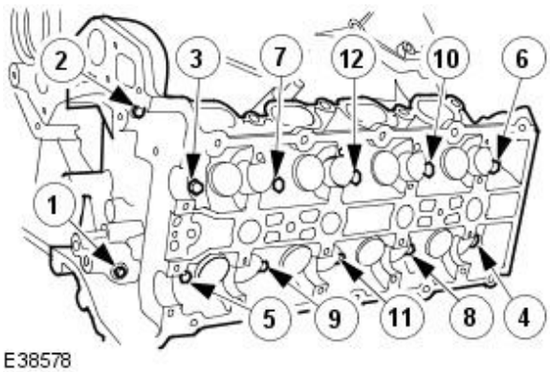

E38578

1. Remove the left-hand camshafts.
   For additional information, refer to: Camshafts LH (303-01 Engine, In-vehicle Repair).
2. Remove the left-hand cylinder head.
   - Remove the bolts in the indicated sequence.
   - Remove and discard the gasket.

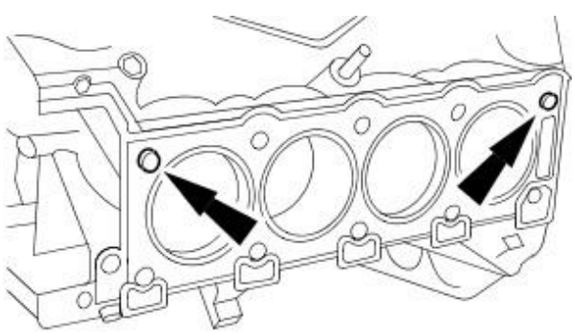

E31267

3. CAUTION: Only use a plastic scrapper to clean off old gasket.

   Remove the cylinder head gasket.
   - Clean the gasket mating faces.
   - Clean the cylinder head locating dowels.

Installation

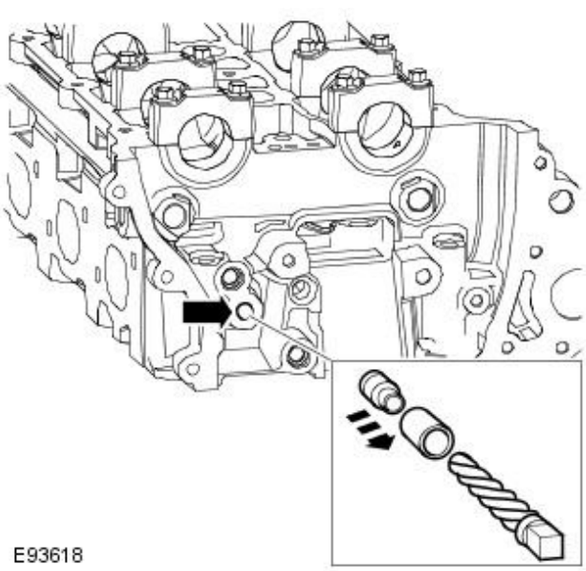

E93618

1. CAUTIONS:

   If a replacement cylinder head is to be installed to a vehicle with VCT the cylinder head must have the oil gallery blind rivet removed before installation.

   Make sure that all debris is removed from the cylinder head and cylinder head oil gallery.

   Vehicles fitted with VCT: Remove the blind rivet from the VCT oil gallary.

   • NOTE: The centre bore of the blind rivet is 6 mm (0.24 inch) diameter.
   - Identify the VCT oil supply gallery and the 8 mm (0.31 inch) blind rivet.
   - Using a suitable 3 mm (0.12 inch) punch release the centre of the blind rivet until it is released from the outer part of the blind rivet.
   - Using a suitable extraction tool, remove the remaining part of the blind rivet.

2. Clean the component mating faces.

3. Check cylinder head face for distortion, across the center and from corner to corner.

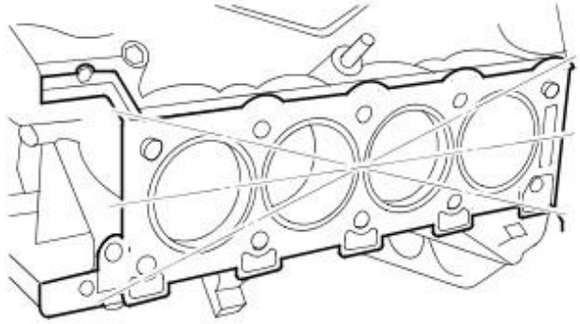

E46855

4. For cylinder head face distortion data, refer to specifications. For additional information, refer to: Specifications (303-00 Engine System - General Information, Specifications).

5. NOTE: For cylinder head with distortion above the maximum allowance, the cylinder head material must be measured.

Measure the cylinder head material.

- Check measurement from the centre of the exhaust dowel to the cylinder head face as shown.
- If the measurement is less than 51.88 mm the cylinder head requires replacement.

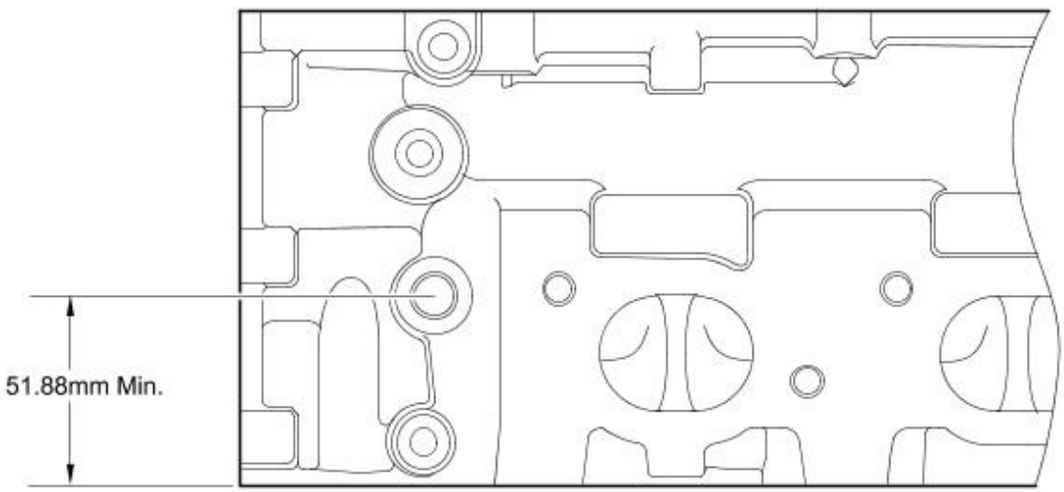

E100333

6. NOTE: Make sure gasket mating faces are clean and dry.

• NOTE: Tighten the bolts 1 to 10 in the sequence shown.

Install the left-hand cylinder head.

1. Tighten bolts 1 to 10 to 20 Nm.
2. Tighten bolts 1 to 10 to 35 Nm.
3. Tighten bolts 1 to 10 to 90°.
4. Tighten bolts 1 to 10 to 90°.
5. Tighten bolts 11 to 12 to 25 Nm.

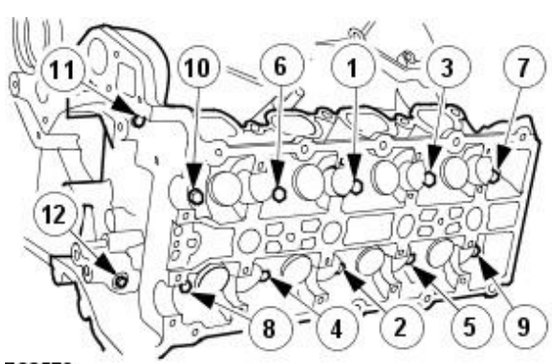

E38579

7. Install the left-hand camshafts.
For additional information, refer to: Camshafts LH (303-01 Engine, In-vehicle Repair).

Engine - Engine Front Cover

In-vehicle Repair

Removal

All vehicles

1. Remove the cooling fan motor and shroud. For additional information, refer to Section 303-03A Engine Cooling / 303-03B Supercharger Cooling.
2. Remove the left-hand valve cover.
   For additional information, refer to Valve Cover LH in this section.
3. Remove the right-hand valve cover.
   For additional information, refer to Valve Cover RH in this section.
4. Remove the crankshaft front seal.
   For additional information, refer to Crankshaft Front Seal in this section.

Vehicles with supercharger

5. Remove supercharger drive belt tensioner.
   For additional information, refer to Section 303-05 Accessory Drive.
6. Disconnect the electrical connector.

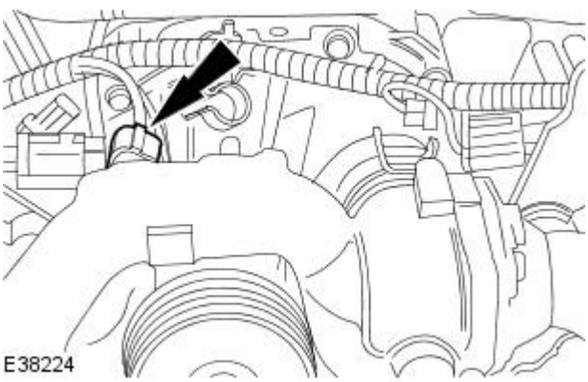

7. Detach the coolant hose.
   - Reposition the retaining clip.

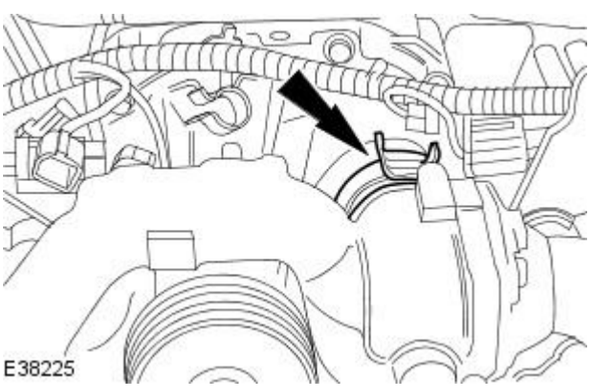

8. Detach the thermostat housing.
   - Remove the retaining bolts

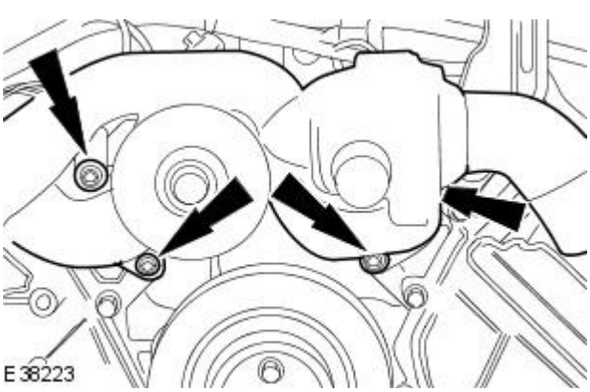

9. Remove the thermostat housing.

- Detach the coolant hose.

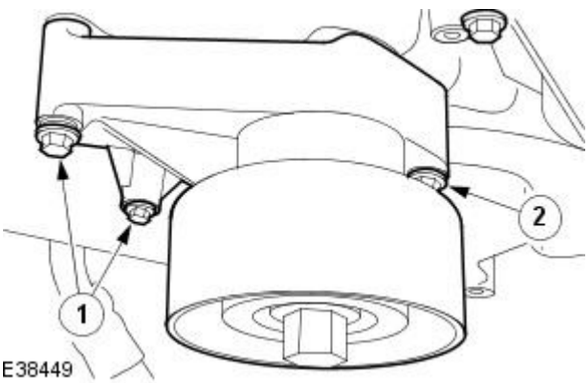

10. Remove the supercharger idler pulley and mount.

1. Remove the retaining bolts.

• NOTE: The retaining bolt will remain captive.

2. Remove the supercharger idler pulley and mount.

All vehicles

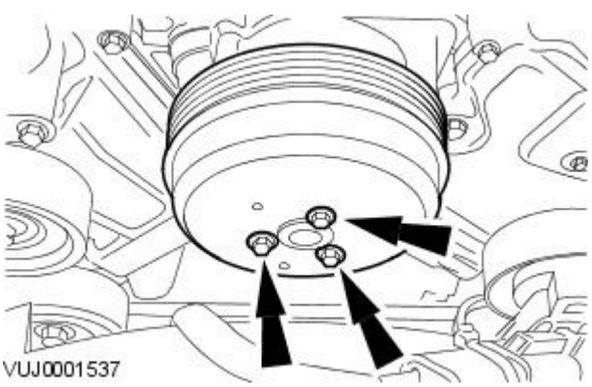

11. Remove the water pump pulley.

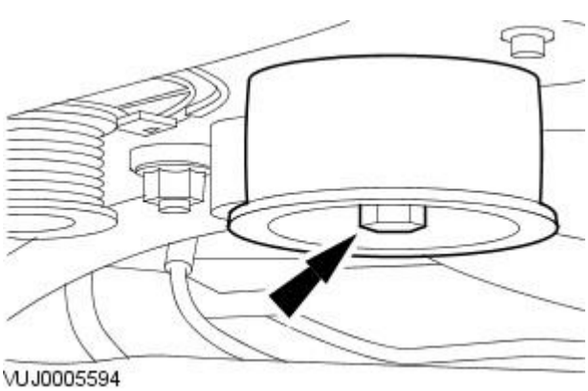

12. Remove the accessory drive belt idler pulley.

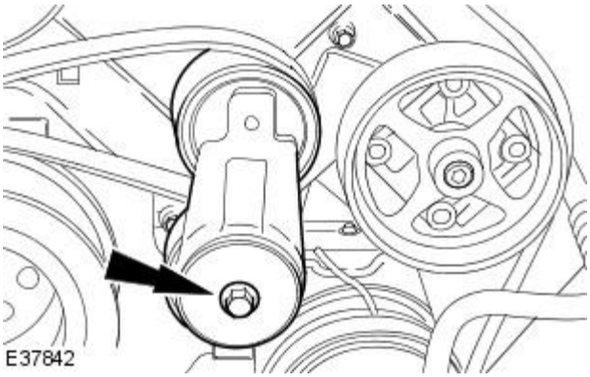

13. Remove the drive belt tensioner.

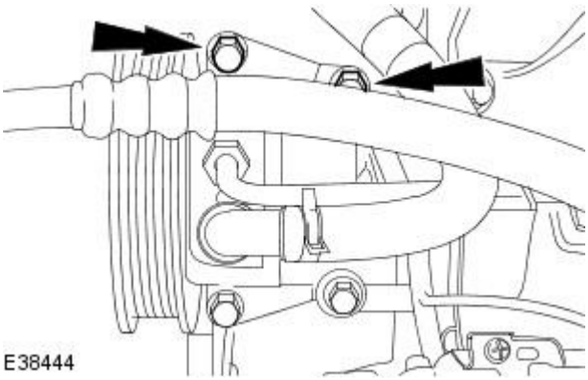

14. Remove the power steering pump upper securing bolts.

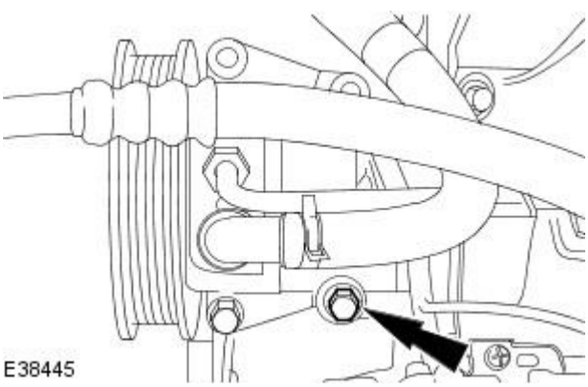

15. Raise the vehicle.

16. Remove the power steering pump rear lower securing bolt.

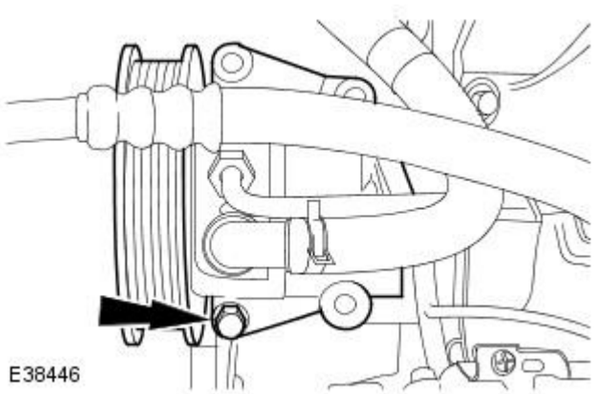

17. Lower the vehicle.

18. Detach the power steering pump.

- Remove the power steering pump front lower securing bolt.

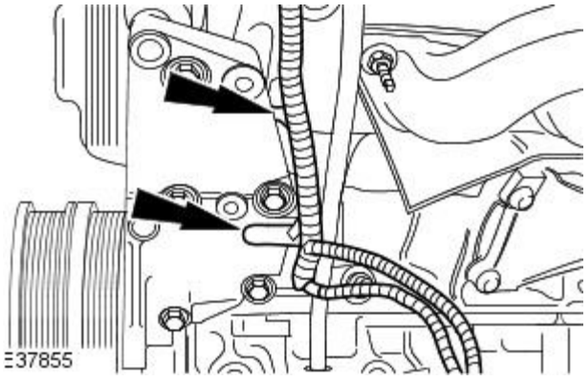

19. Detach the wiring harness.

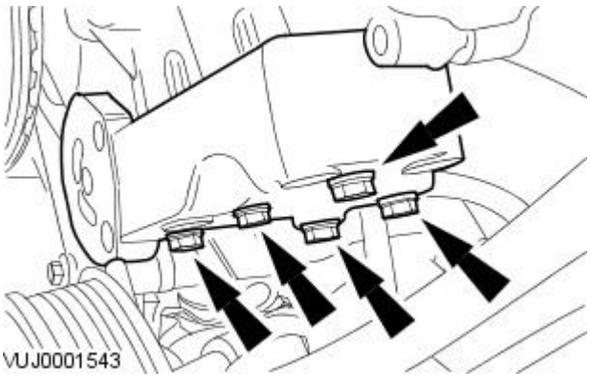

20. Remove the power steering pump mount bracket.

- Remove the retaining bolts.

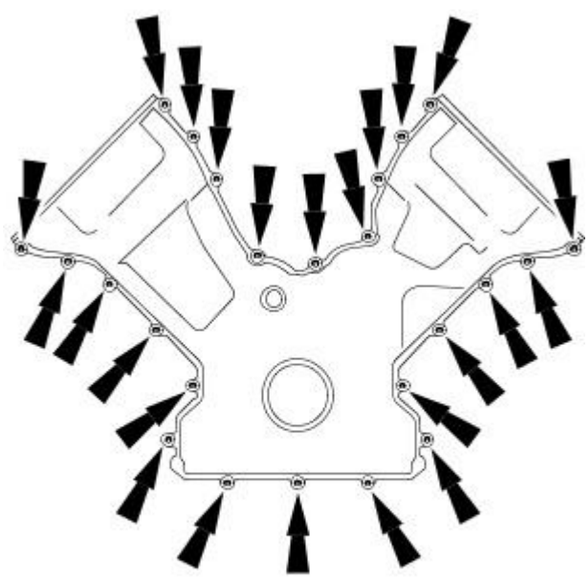

21. Remove the engine front cover.

- Remove and discard the seals.

Installation

All vehicles

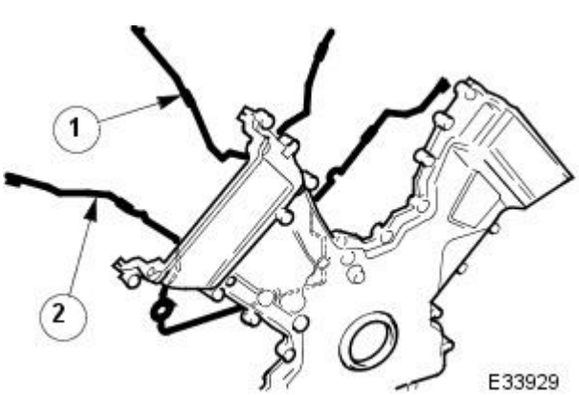

1. Install new seals to the timing cover.

1. Install the new seal to the inner groove on the face of the timing cover.
2. Install the new seal to the outer groove on the face of the timing cover.

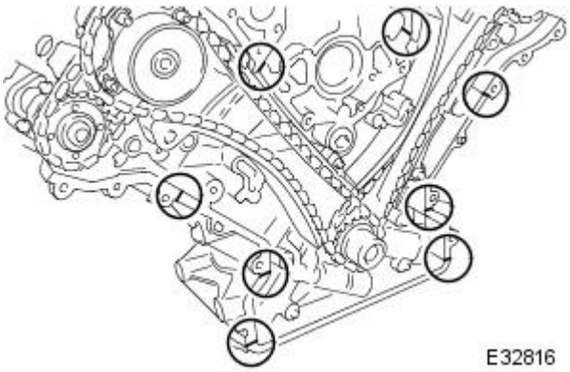

2. Apply sealant to the eight joints on the engine face.

- Sealant beads to be 3mm diameter and 12mm long. Cut the nozzle of the sealant tube to produce a 3 mm (0.12 in) bead. (Install and tighten the securing bolts within twenty minutes of sealant application).

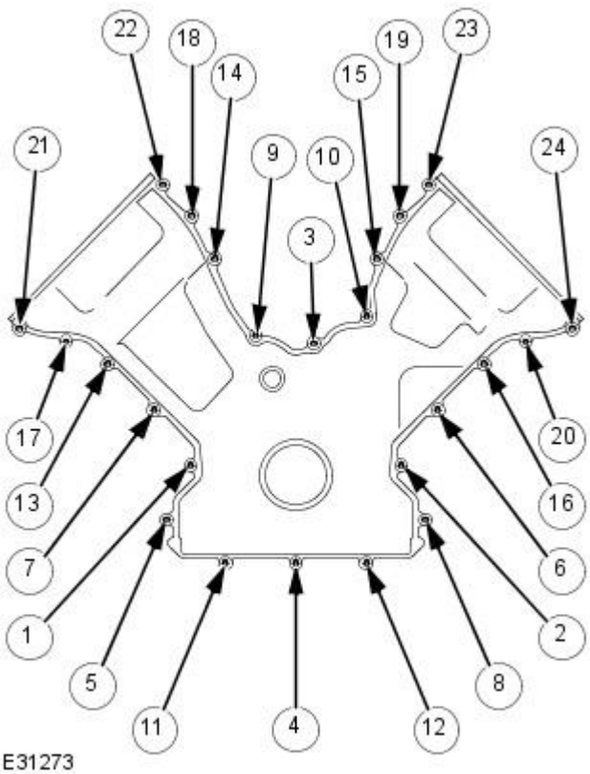

3. Install the timing cover.

- Tighten in the sequence shown.
- Tighten to 13 Nm.

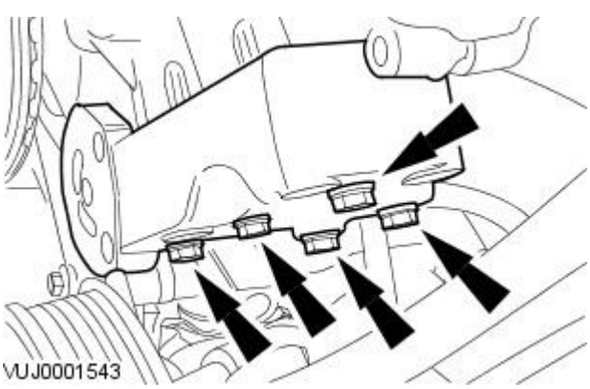

4. Install the power steering pump mounting bracket.

- Tighten to 25 Nm.

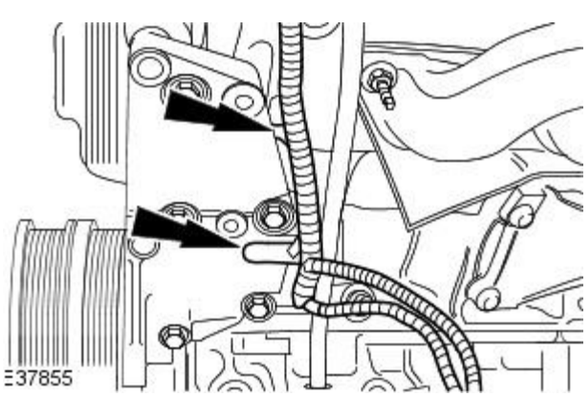

5. Attach the wiring harness.

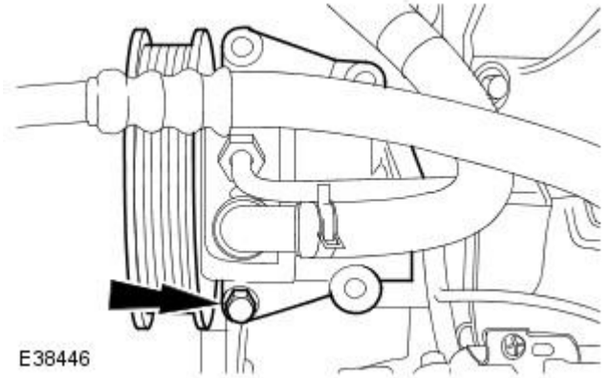

6. Attach the power steering pump.

- Tighten to 25 Nm.

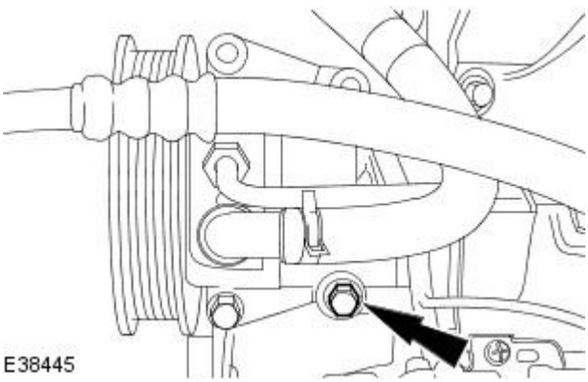

7. Raise the vehicle.

8. Install the power steering pump rear lower securing bolt.

- Tighten to 25 Nm.

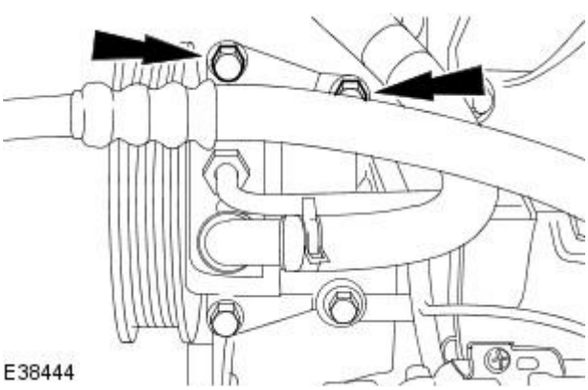

9. Lower the vehicle.

10. Install the power steering pump upper securing bolts.

- Tighten to 25 Nm.

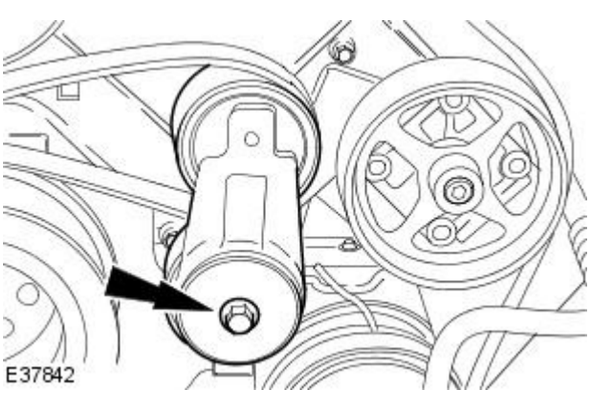

11. Install the drive belt tensioner.

- Tighten to 42 Nm.

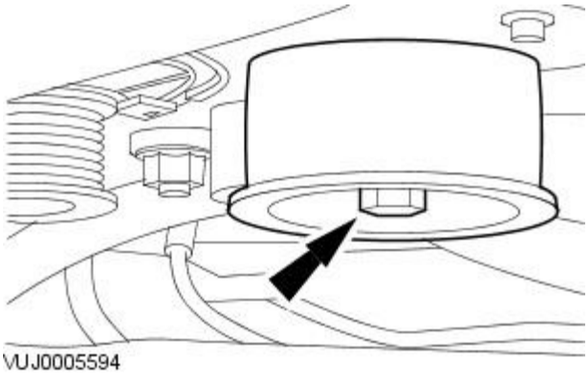

12. Install the accessory drive belt idler pulley.

- Tighten to 25 Nm.

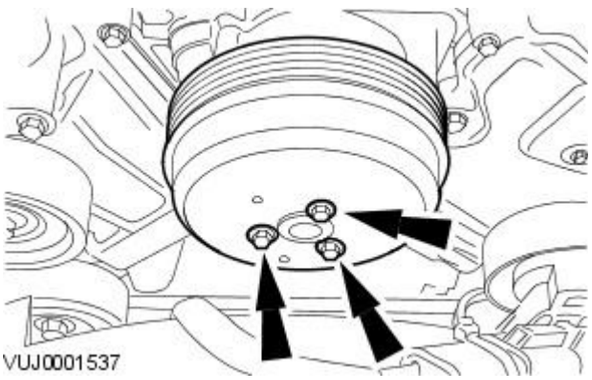

13. Install the water pump pulley.

- Tighten to 10 Nm + 45°.

Vehicles with supercharger

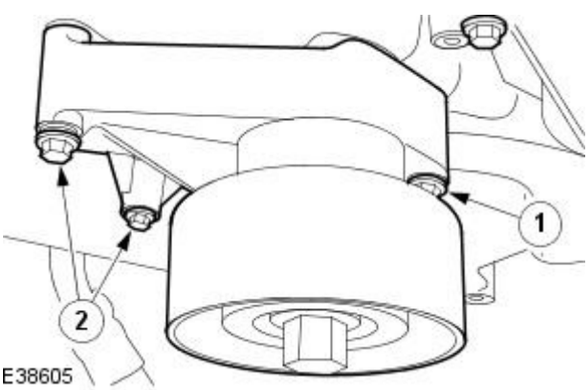

14. Install the supercharger idler pulley and mount.

1. Tighten the retaining bolt.
2. Tighten the retaining bolts.

15. Attach the coolant hose.

- Reposition the retaining clip.

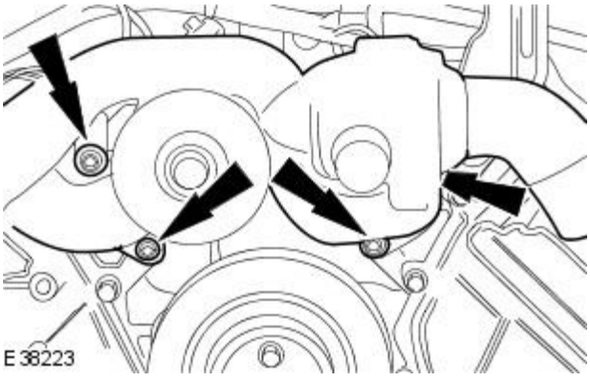

16. Attach the thermostat housing.

- Tighten to 10 Nm.

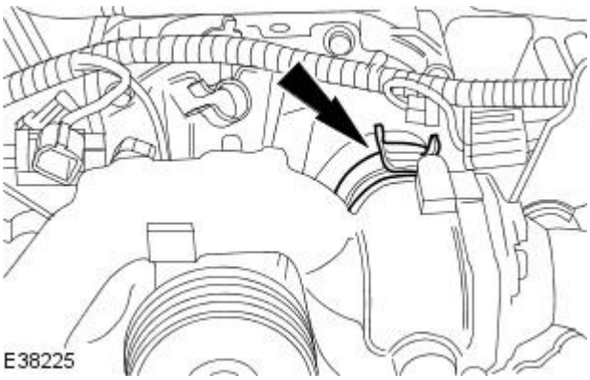

17. Attach the coolant hose.

- Reposition the retaining clip.

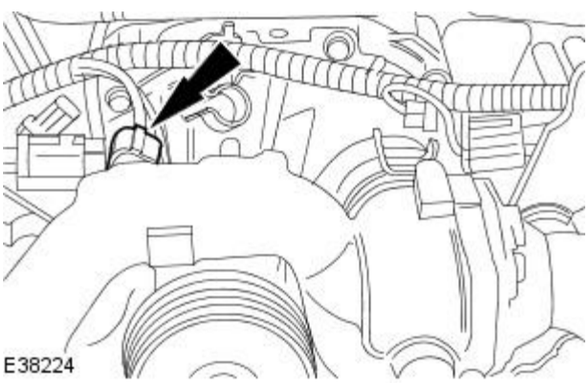

18. Connect the electrical connector.

19. Install the supercharger drive belt.
For additional information, refer to Section 303-05 Accessory Drive.

All vehicles

20. Install the crankshaft front seal.
For additional information, refer to Crankshaft Front Seal in this section.

21. Install the left-hand valve cover.
For additional information, refer to Valve Cover LH in this section.

22. Install the right-hand valve cover.
For additional information, refer to Valve Cover RH in this section.

23. Install the cooling fan motor and shroud. For additional information, refer to Section 303-03A Engine Cooling / 303-03B Supercharger Cooling.

Engine - Engine Mount LH

In-vehicle Repair

Special Tool(s)	
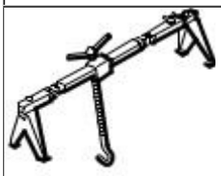 303-021	Engine support beam 303-021
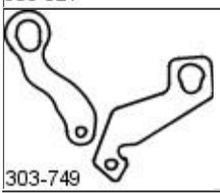 303-749	Engine lifting brackets 303-749

Removal

All vehicles

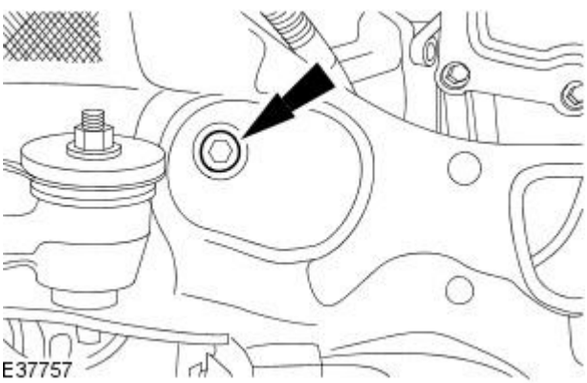

1. Raise and support the vehicle.
   For additional information, refer to Section 100-01 Identification Codes.
2. NOTE: Right hand shown left hand similar.

   Remove both engine mount lower retaining bolts.

Vehicles with convertible top

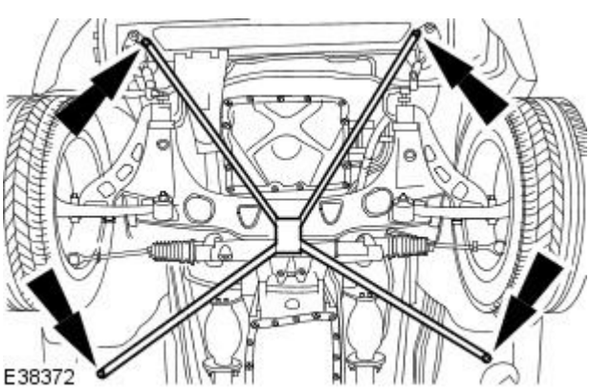

3. Remove the radiator splash shield.
   For additional information, refer to Section 501-02 Front End Body Panels.
4. Remove the underbody front cross brace.

Left-hand drive vehicles

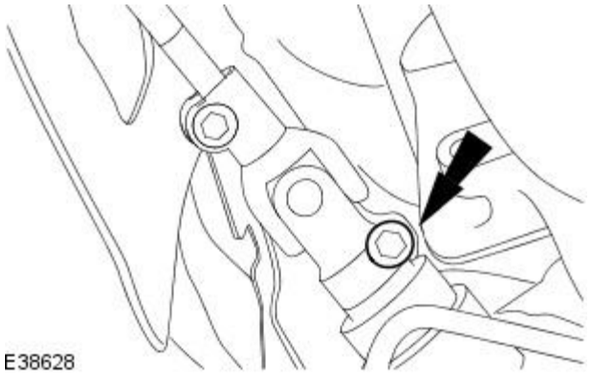

5. Remove the steering column lower shaft pinch bolt.

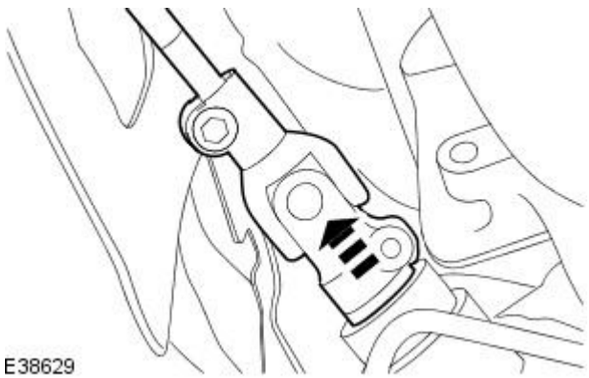

6. Detach the steering column lower shaft.

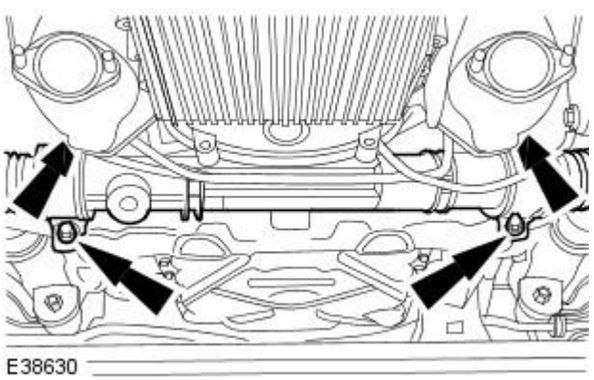

7. Detach the steering gear.

- Using suitable tie straps support the steering gear.

All vehicles

8. Lower the vehicle.

9. Install the front engine lifting bracket.

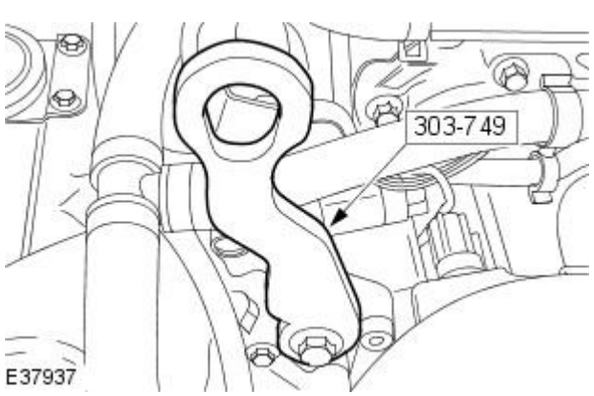

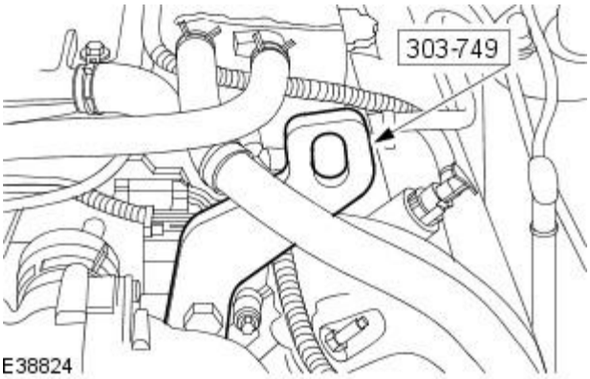

10. Install the front engine lifting bracket.

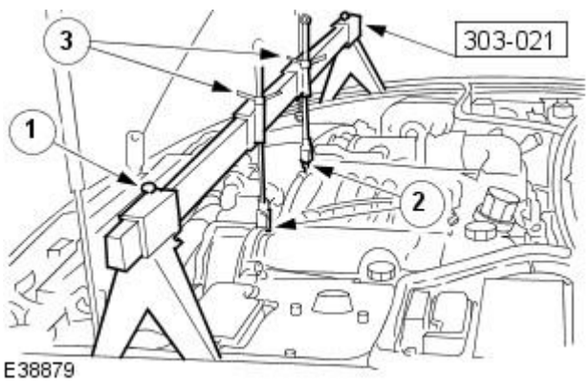

11. Using the special tool support the weight of the engine.

1. Position the special tool to the fender channels and tighten beam fixings.
2. Attach the hooks to the engine front lifting brackets.
3. Tighten the hook adjustment nuts until the weight of the engine is supported.

12. Raise the vehicle.

13. NOTE: Right-hand shown left-hand similar.

Remove the engine mount.

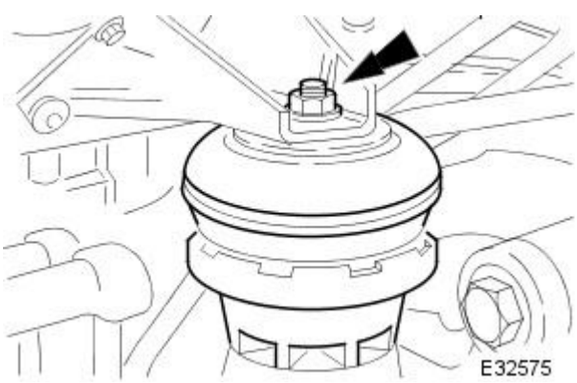

Installation

All vehicles

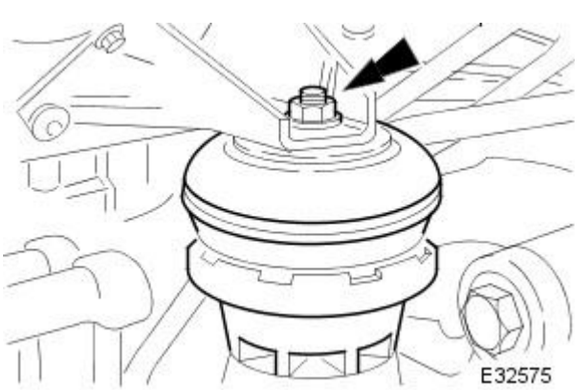

1. Install the engine mount.

- Tighten to 40 (+/- 15%) Nm.

2. Lower the vehicle.

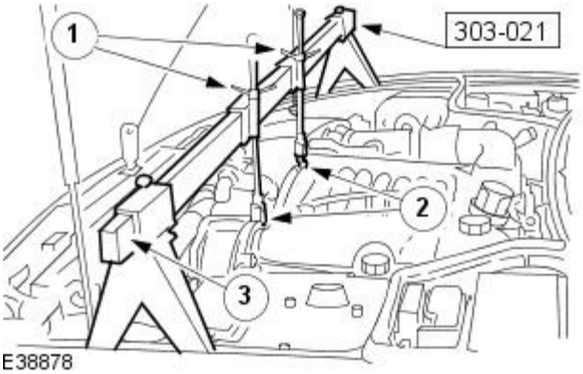

3. Remove the special tool.

1. Loosen the hook adjustment nuts.
2. Detach the hooks from the engine front lifting brackets.
3. Remove the special tool.

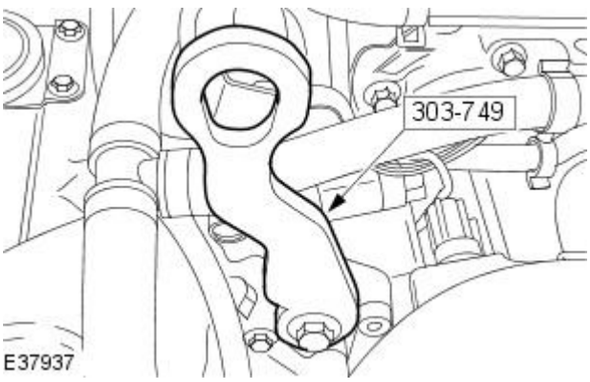

4. Remove the front engine lifting brackets.

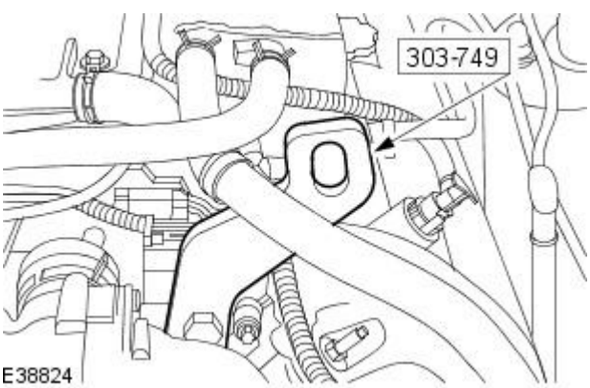

5. Remove the front engine lifting brackets.

6. Raise the vehicle.

Left-hand drive vehicles

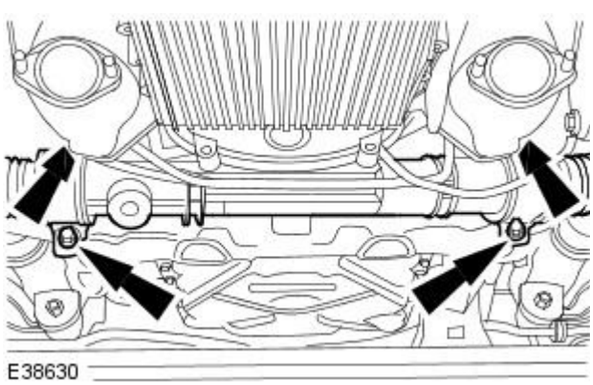

7. Attach the steering gear.

- Remove the suitable tie straps supporting the steering gear.
- Tighten to 45 Nm.

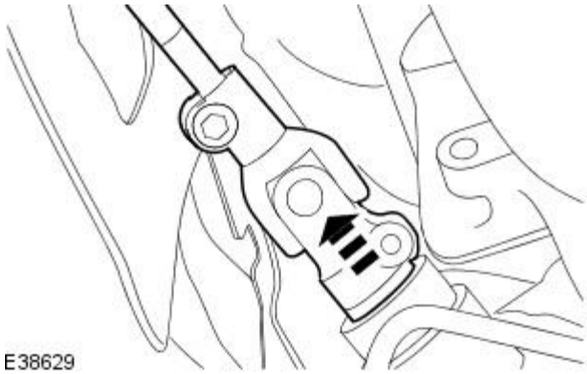

8. Attach the steering column shaft.

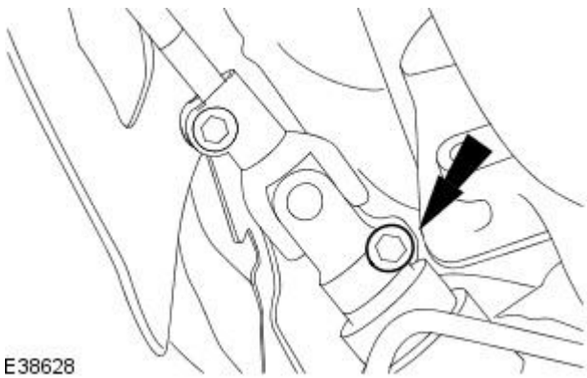

9. Install the steering column shaft retaining bolt.

- Tighten to 25 Nm.

Vehicles with convertible top

10. Install the radiator splash shield.
For additional information, refer to Section 501-02 Front End Body Panels.

11. Install the underbody front cross brace.

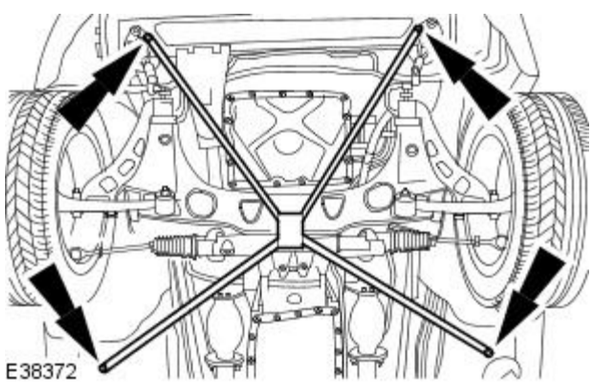

All vehicles

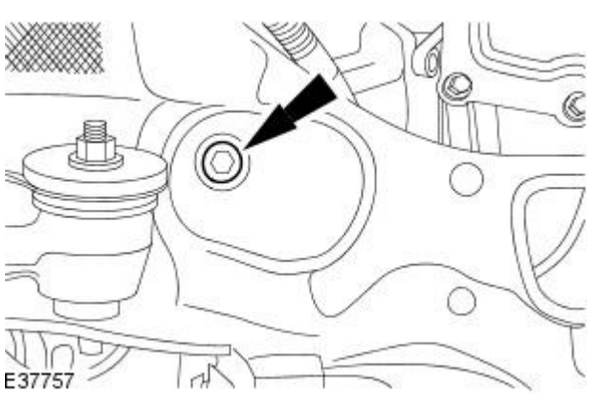

12. Install the engine mount retaining bolt.

- Tighten to 30 (+/- 15%) Nm.

13. Lower the vehicle.

Engine - Engine Mount RH

In-vehicle Repair

Special Tool(s)	
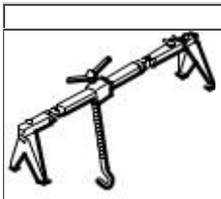 303-021	Engine support beam. 303021
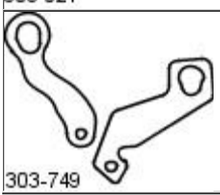 303-749	Engine lifting brackets 303749

Removal

All vehicles

1. Remove the air cleaner.
   For additional information, refer to Section 303-12 Intake Air Distribution and Filtering.
2. Install the front engine lifting brackets.
3. Support weight of engine.
   1. Position special tool in RH and LH fender channels and tighten beam fixings.
   2. Engage hooks into the engine front lifting eyes.
   3. Tighten hook adjustment nuts until weight of engine is supported.

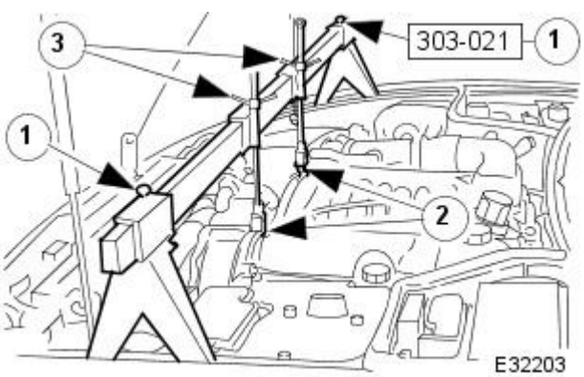

Right-hand drive vehicles

4. Remove the steering gear.
   For additional information, refer to Section 211-02 Power Steering.

All vehicles

5. Remove the engine mount retaining bolt.

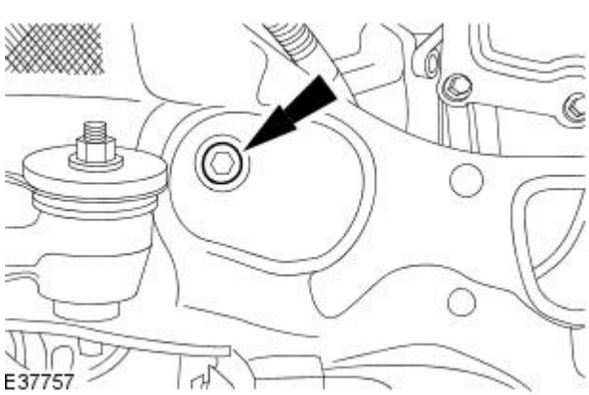

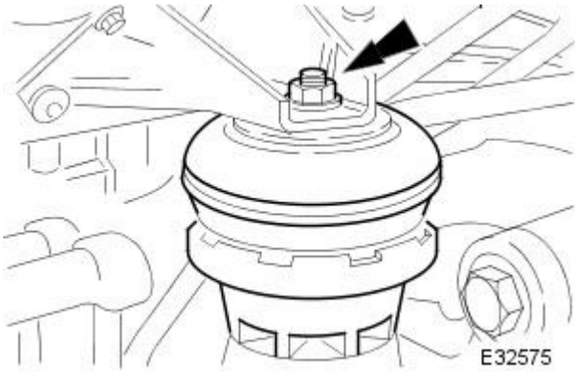

6. Remove the engine mount retaining nut.

7. Lower the vehicle.

8. Remove the engine mount.

Installation

All vehicles

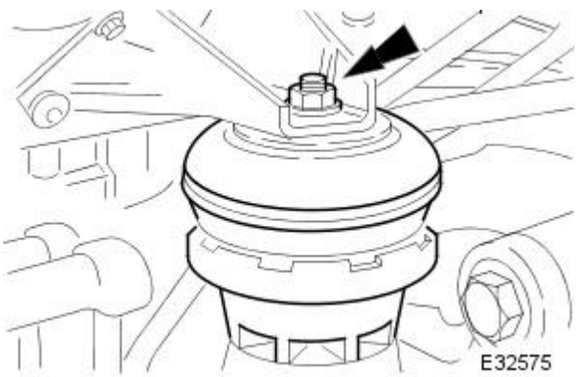

1. Install the engine mount.

- Tighten to 40 (+/- 15%) Nm.

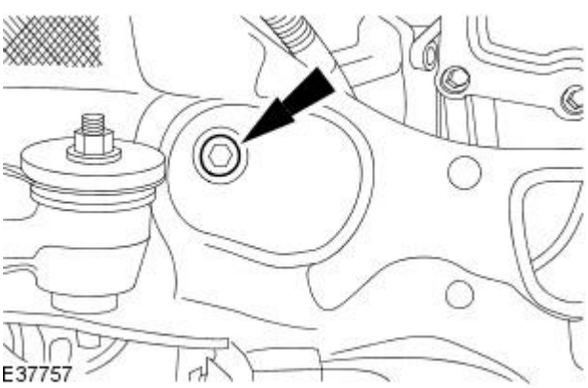

2. Raise the vehicle.

3. Install the engine mount retaining bolt.

- Tighten to 30 (+/- 15%) Nm.

Right-hand drive vehicles

4. Install the steering gear.
For additional information, refer to Section 211-02 Power Steering.

All vehicles

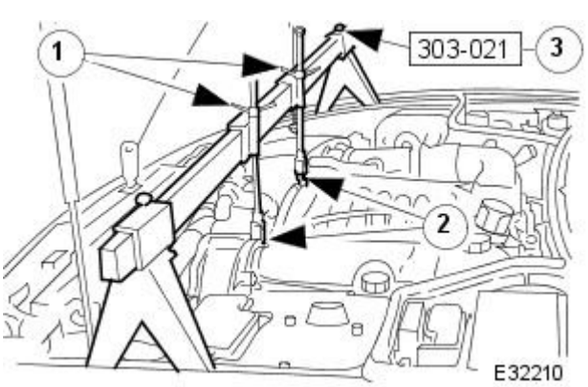

5. Remove the special.

- Release hook adjustment nuts.
- Release hooks from brackets.
- Remove special tool.

6. Remove the front engine lifting brackets.

7. Install the air cleaner.

Engine - Exhaust Manifold RH

In-vehicle Repair

Removal

All vehicles

1. Remove the right-hand catalytic converter.
   For additional information, refer to Section 309-00 Exhaust System.

Right-hand drive vehicles

2. Remove the steering gear.
   For additional information, refer to Section 211-02 Power Steering.

All vehicles

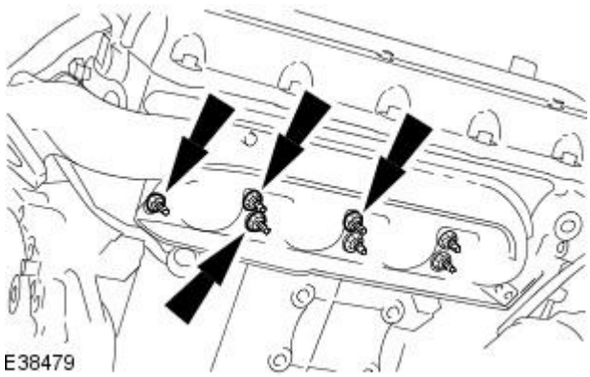

3. NOTE: New exhaust manifold retaining studs must be fitted if the old retaining studs are removed.

   Remove and discard the retaining nuts.

4. Lower the vehicle.
5. Remove the air cleaner.
   For additional information, refer to Section 303-12 Intake Air Distribution and Filtering.
6. Remove the exhaust manifold to EGR valve tube retaining nuts.
   - Remove and discard the retaining nuts and gasket.

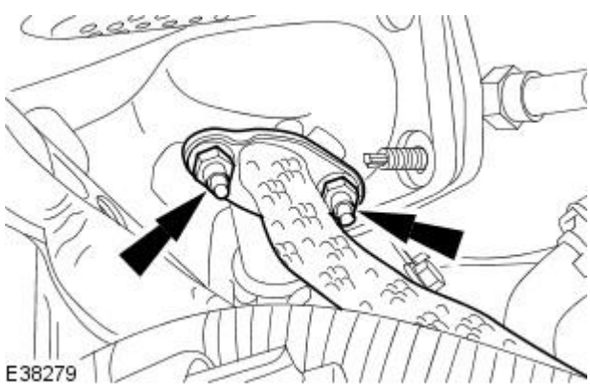

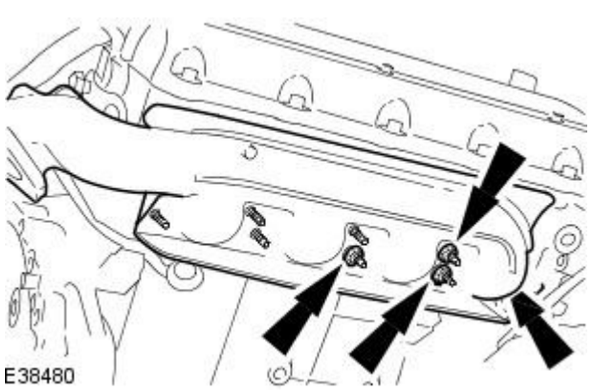

7. NOTE: New exhaust manifold retaining studs must be fitted if the old retaining studs are removed.

   Remove the exhaust manifold.
   - Remove and discard the retaining nuts and heat shield/gasket.

Installation

All vehicles

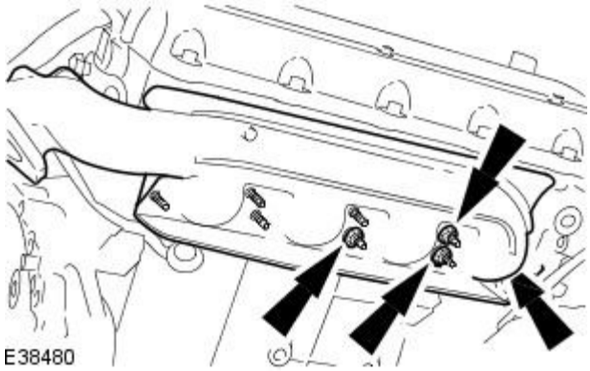

1. CAUTIONS:

Make sure exhaust manifold and heat shield/gasket is correctly aligned to cylinder head and studs.

When all retaining nuts have been torqued, re-torque all retaining nuts to 25 Nm.

Install the exhaust manifold.

- Install new retaining nuts and a new heat shield/gasket.
- Tighten to 25 Nm.

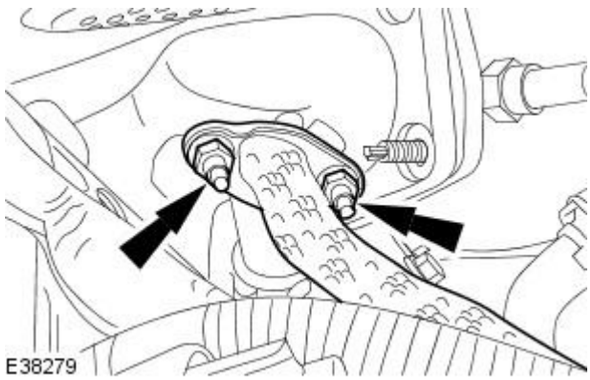

2. Attach the exhaust manifold to EGR valve tube retaining nuts.

- Install new retaining nuts and a new gasket.
- Tighten to 22 Nm.

3. Install the air cleaner.
For additional information, refer to Section 303-12 Intake Air Distribution and Filtering.

4. Raise the vehicle.

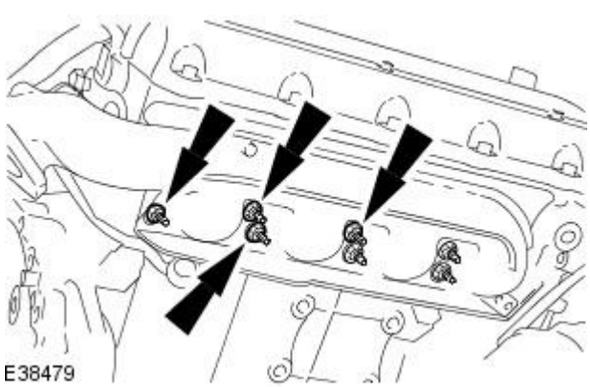

5. CAUTION: When all retaining nuts have been torqued, re-torque all retaining nuts to 25 Nm.

Tighten to 25 Nm.

- Install new retaining nuts.

Right-hand drive vehicles

6. Install the steering gear.
For additional information, refer to Section 211-02 Power Steering.

All vehicles

7. Install the right-hand catalytic converter.
For additional information, refer to Section 309-00 Exhaust System.

Engine - Flexplate

In-vehicle Repair

Removal

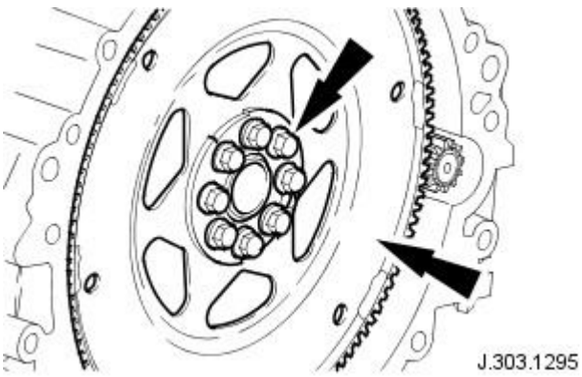

1. Remove the automatic transmission. For additional information, refer toFor additional information, refer to: Transmission (307-01 Automatic Transmission/Transaxle, Removal).

2. CAUTION: The bolts can only be used 3 times, mark the bolts with a center punch. If 2 punch marks are visible, discard the bolts.

• NOTE: Prevent the flexplate from rotating.

Remove the flexplate.

- Remove the 8 bolts.

Installation

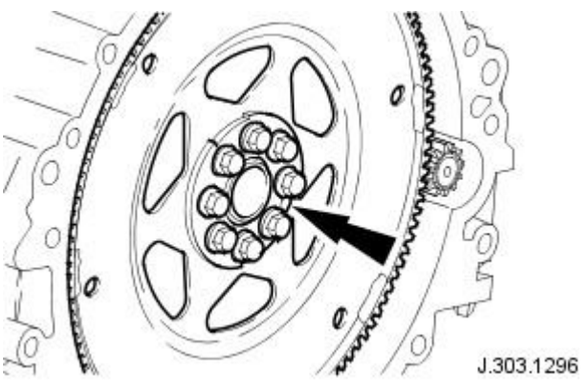

1. NOTE: Make sure the crankshaft and flexplate mating faces are clean before installation.

• NOTE: The flexplate will only locate in one position.

• NOTE: Install, but do not tighten, the flexplate retaining bolts.

Install the flexplate.

- Prevent the flexplate from rotating.

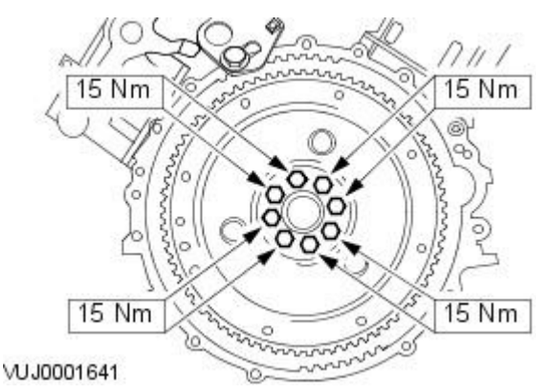

2. NOTE: Tighten the retaining bolts working diagonally.

Tighten to 15 Nm.

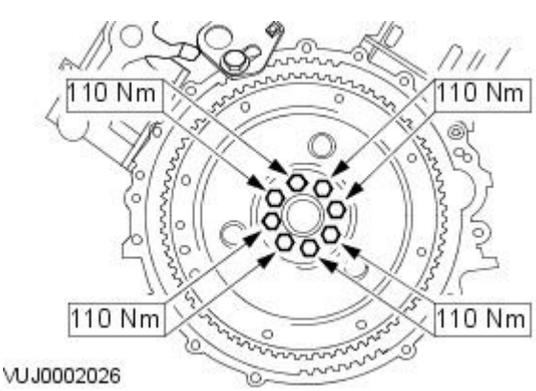

3. NOTE: Tighten the retaining bolts working diagonally.

Tighten to 110 Nm.

4. Install the automatic transmission. For additional information, refer toFor additional information, refer to: Transmission (307-01 Automatic Transmission/Transaxle, Installation).

Engine - Intake Manifold

In-vehicle Repair

Removal

1. Release the fuel system pressure.
   For additional information, refer to Section 310-00 Fuel System - General Information.
2. Remove the air cleaner outlet pipe.
   For additional information, refer to Section 303-12 Intake Air Distribution and Filtering.
3. NOTE: Left hand shown, right hand similar.

   Remove the engine cover retaining brackets.

   - Detach the knock sensor (KS) electrical connectors.

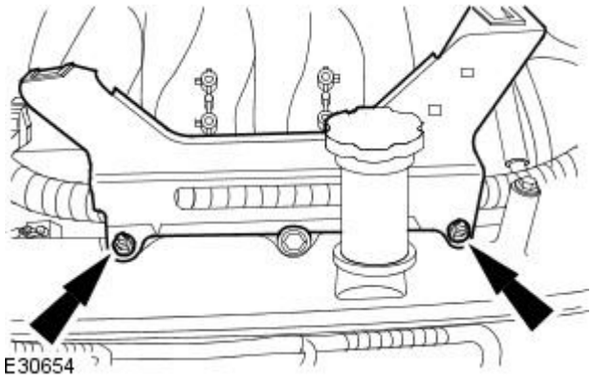

4. Detach the engine wiring harness.

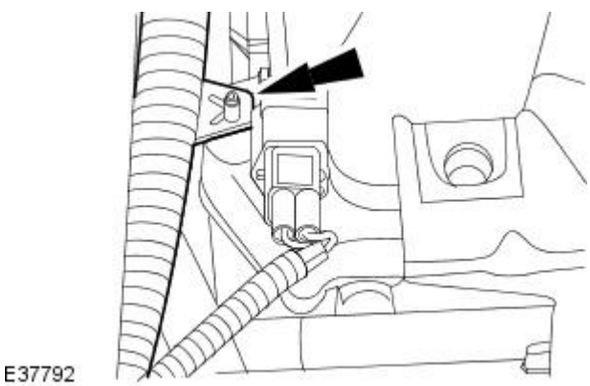

5. Disconnect the hose.

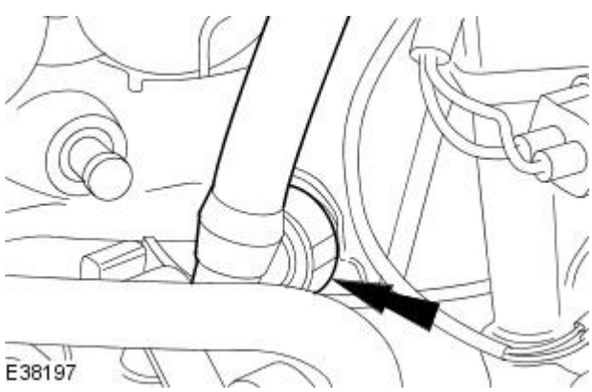

6. Disconnect the pipe.

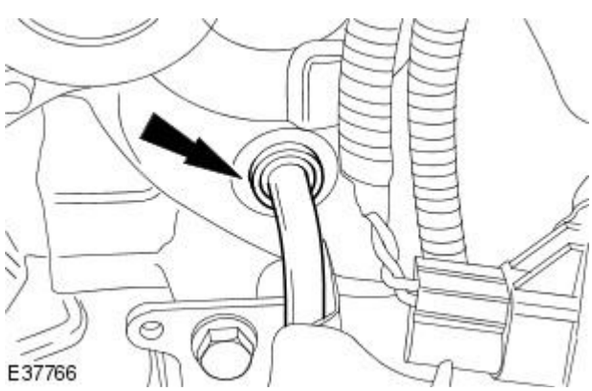

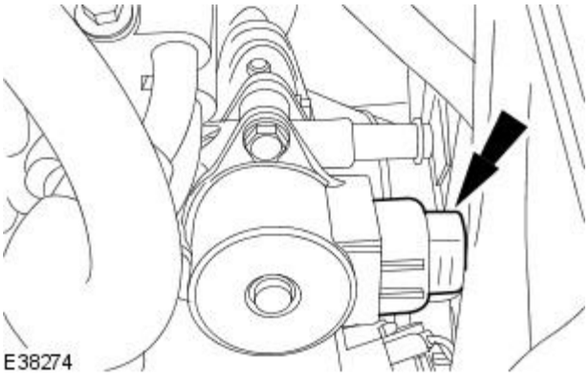

7. Disconnect the exhaust gas recirculation (EGR) valve electrical connector.

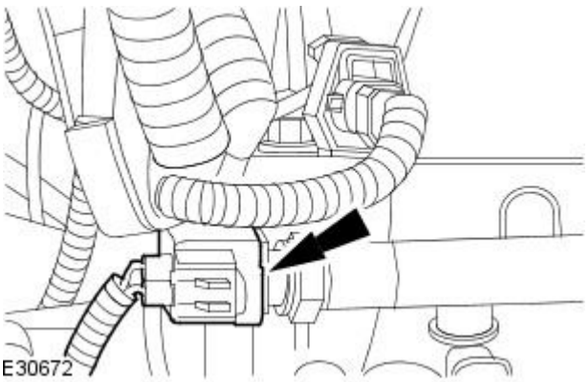

8. Disconnect the fuel temperature sensor electrical connector.

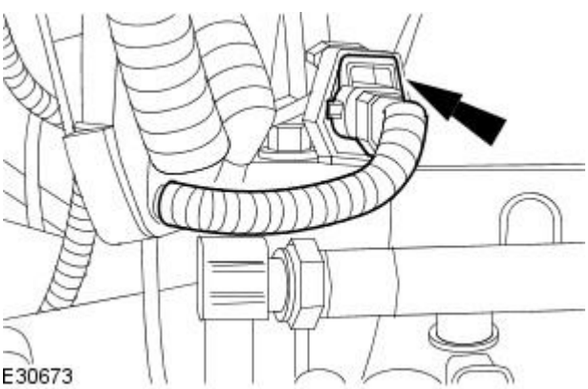

9. Disconnect the right-hand camshaft position (CMP) sensor.

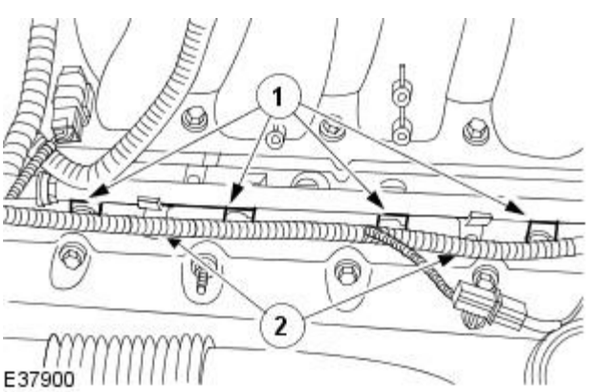

10. Detach the wiring harness.

1. Disconnect the electrical connectors.
2. Detach the wiring harness.

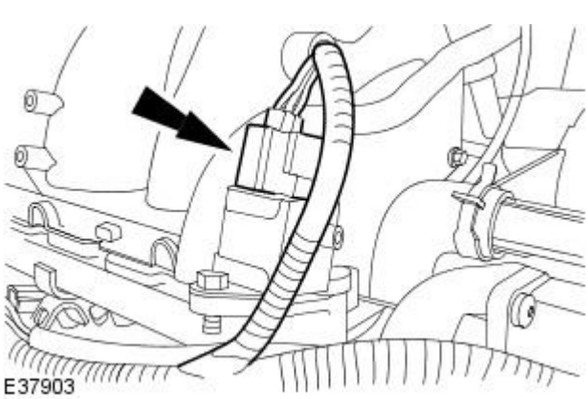

11. Disconnect the fuel pressure regulator electrical connector.

12. WARNING: TO AVOID HOT COOLANT OR STEAM BLOWING OUT OF THE COOLING SYSTEM, USE EXTREME CARE WHEN REMOVING THE COOLANT EXPANSION TANK PRESSURE CAP. WAIT UNTIL THE ENGINE HAS COOLED DOWN, THEN INSULATE THE COOLANT PRESSURE CAP WITH A SUITABLE CLOTH AND SLOWLY LOOSEN THE COOLANT EXPANSION TANK PRESSURE CAP UNTIL THE COOLING SYSTEM PRESSURE IS RELEASED. DO NOT REMOVE THE COOLANT EXPANSION TANK PRESSURE CAP. STEP BACK WHILE THE PRESSURE IS RELEASED FROM THE SYSTEM. WHEN ALL OF THE PRESSURE HAS BEEN RELEASED SLOWLY REMOVE THE COOLANT EXPANSION TANK PRESSURE CAP (STILL WITH THE SUITABLE CLOTH IN POSITION) FROM THE COOLANT EXPANSION TANK. FAILURE TO FOLLOW THIS INSTRUCTION MAY RESULT IN PERSONAL INJURY.

Release the cooling system pressure.

13. Disconnect the coolant hose from the expansion tank.

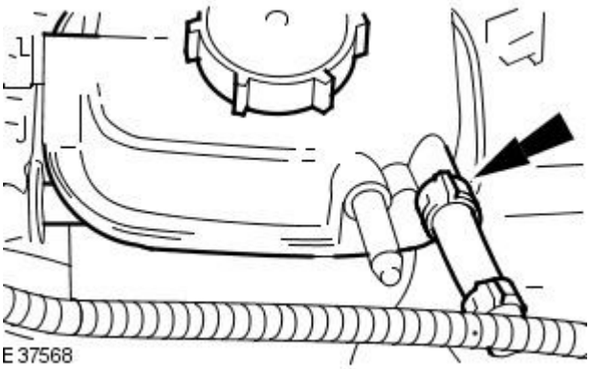
E37568

14. NOTE: Right hand shown, left hand similar.

Detach the wiring harness.

1. Disconnect the electrical connectors.
2. Detach the wiring harness.

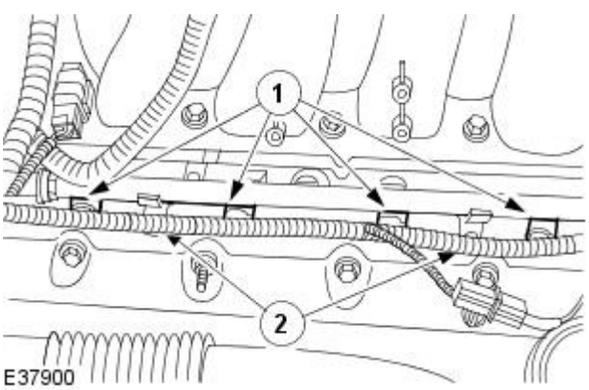

E37900

15. Disconnect the electrical connector.

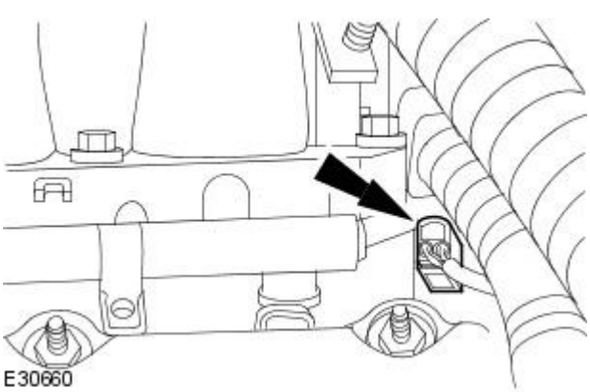
E30660

16. Disconnect the throttle body electrical connectors.

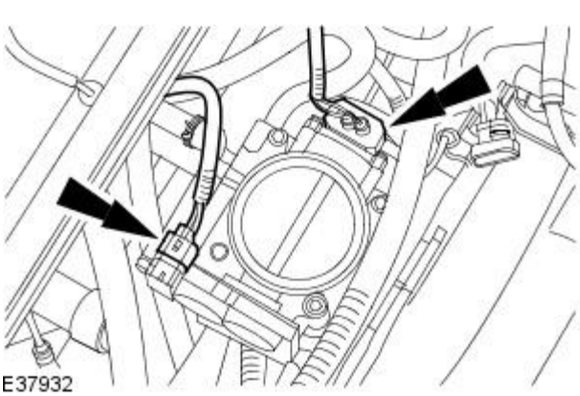
E37932

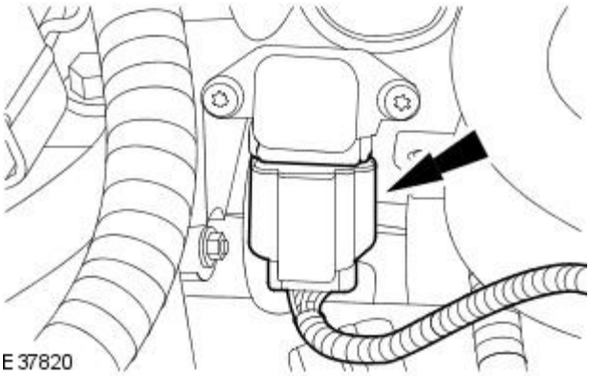

17. Disconnect the manifold absolute pressure (MAP) sensor electrical connector.

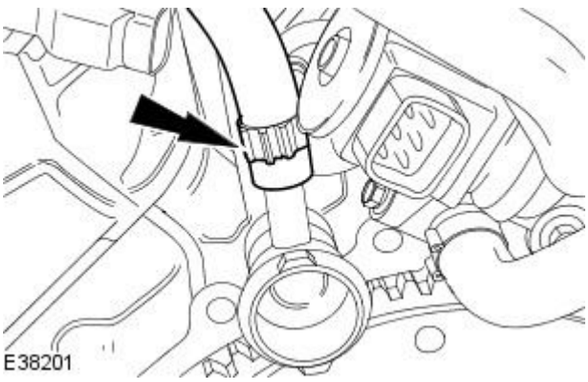

18. Disconnect the coolant hose.

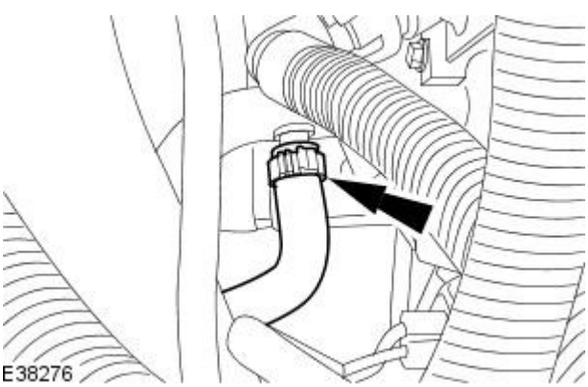

19. Disconnect the coolant hose.

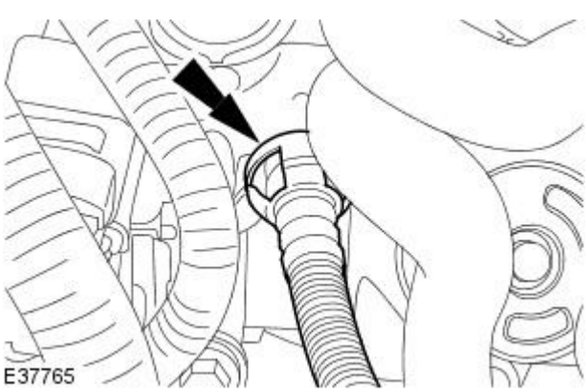

20. Disconnect the hose.

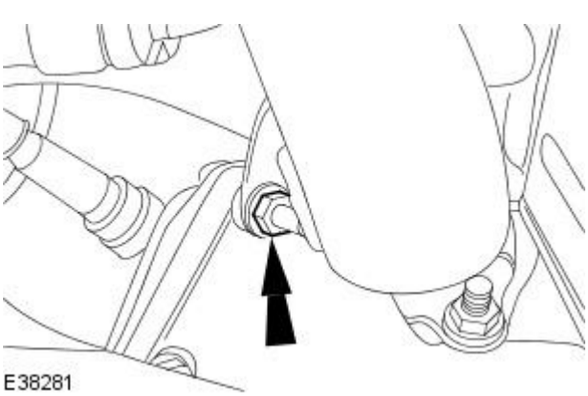

21. Remove the exhaust manifold to exhaust gas recirculation (EGR) valve tube heat shield retaining nut.

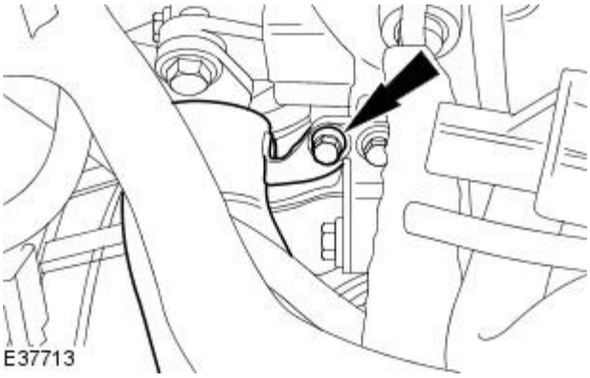

22. Remove the exhaust manifold to EGR valve tube heat shield.

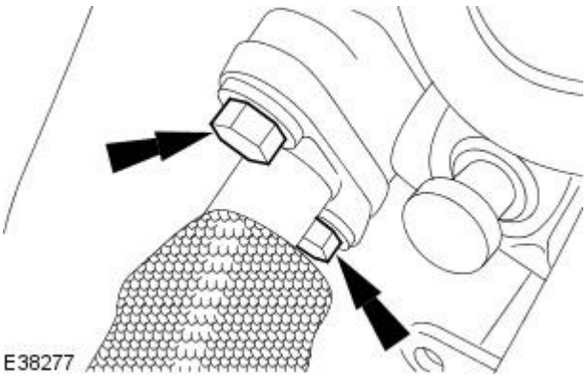

23. Remove the exhaust manifold to EGR valve tube retaining bolts.

- Remove and discard the gasket.

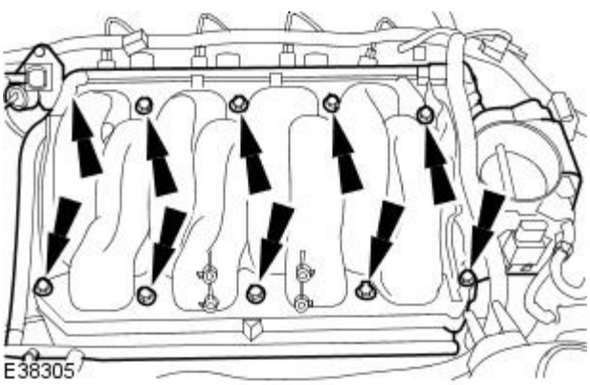

24. Remove the intake manifold.

- Remove and discard the gaskets.

Installation

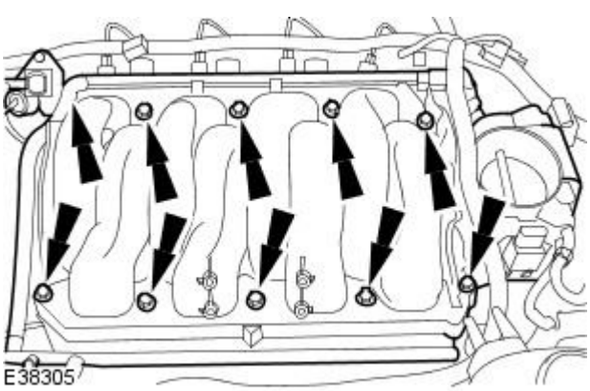

1. Install the intake manifold.

- Install new gaskets.
- Tighten to 22 Nm.

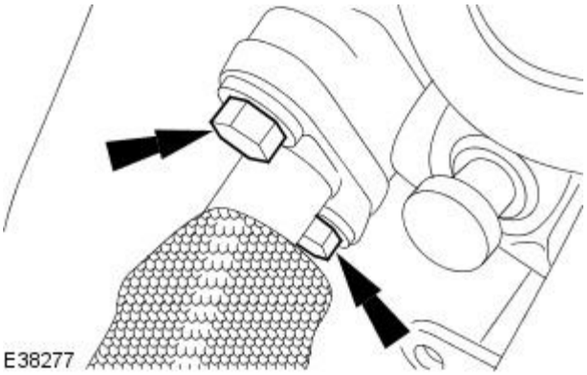

2. Install the exhaust manifold to EGR valve tube retaining bolts.

- Install a new gasket.
- Tighten to 21 Nm.

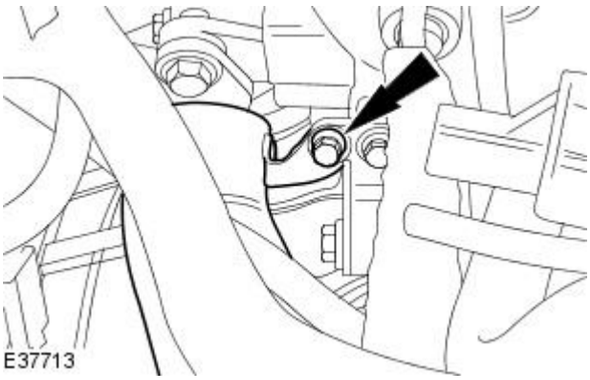

3. Install the exhaust manifold to EGR valve tube heat shield.

- Tighten to 9 Nm.

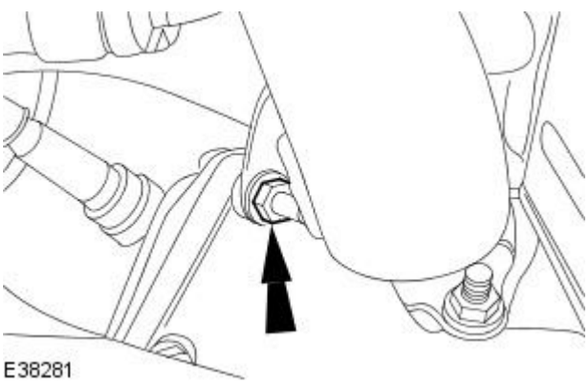

4. Install the exhaust manifold to EGR valve tube heat shield retaining nut.

- Tighten to 60 Nm.

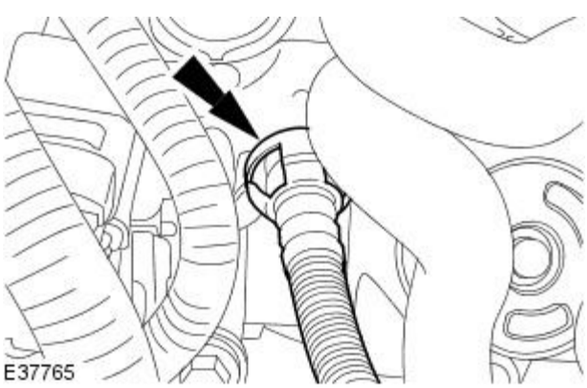

5. Connect the hose.

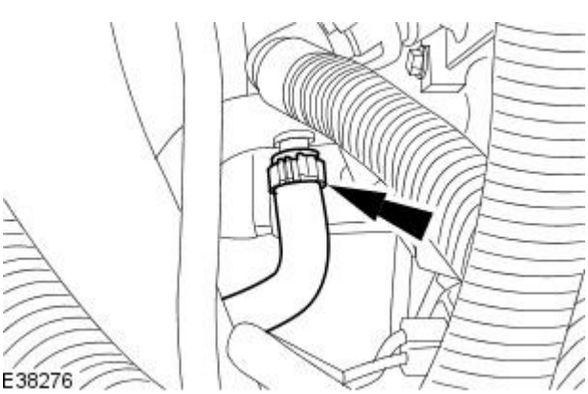

6. Connect the coolant hose.

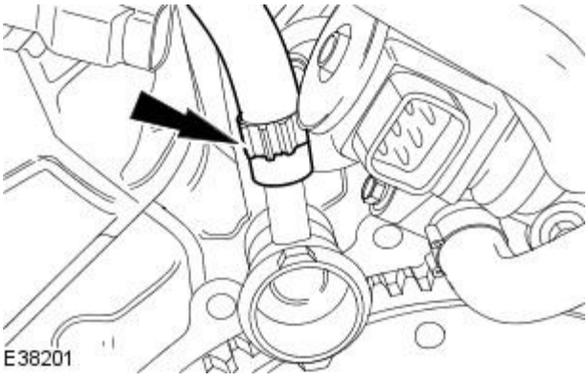

7. Connect the coolant hose.

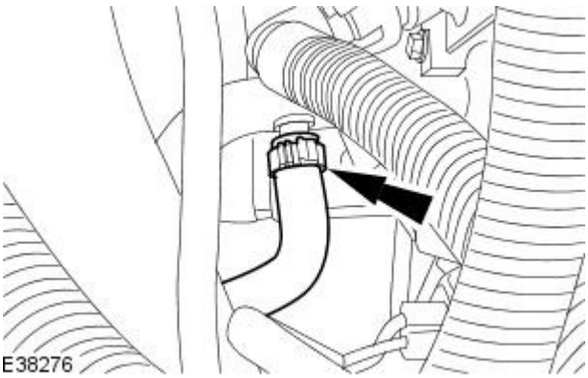

8. Connect the electrical connector.

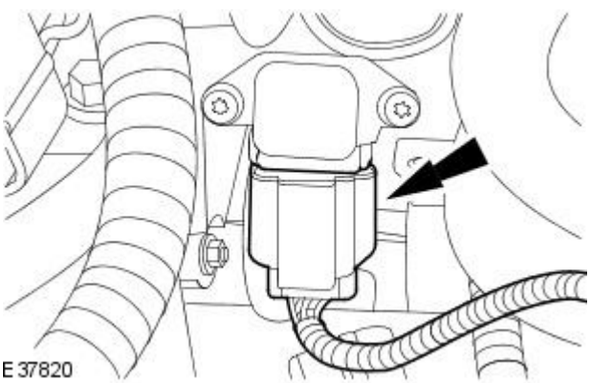

9. Connect the manifold absolute pressure (MAP) sensor electrical connector.

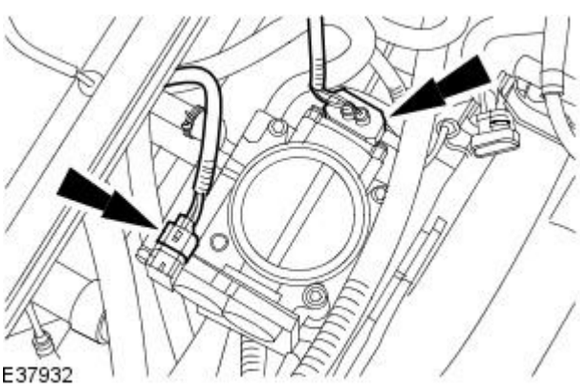

10. Connect the throttle body electrical connectors.

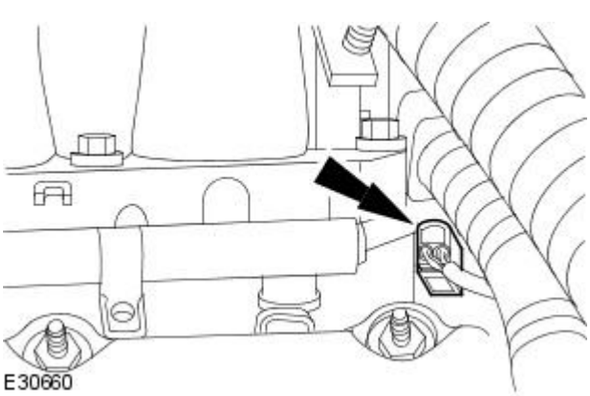

11. Connect the CMP electrical connector.

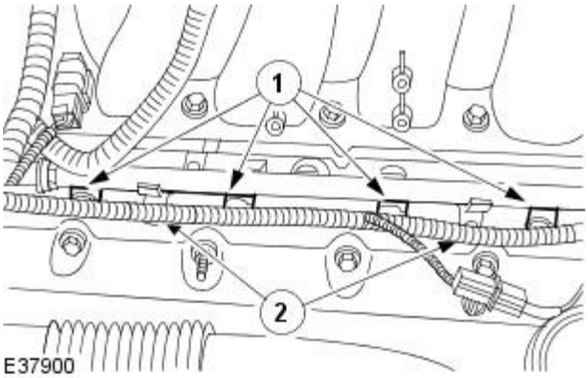

12. NOTE: Right hand shown, left hand similar.

Attach the wiring harness.

1. Connect the electrical connectors.
2. Attach the wiring harness.

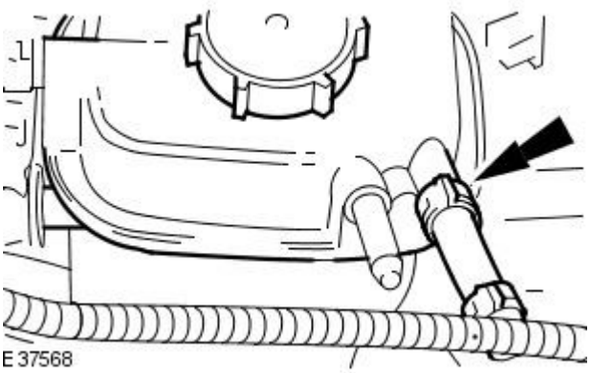

13. Connect the hose to the expansion tank.

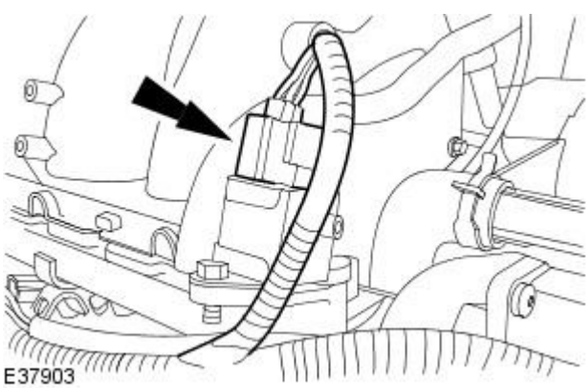

14. Connect the fuel pressure regulator electrical connector.

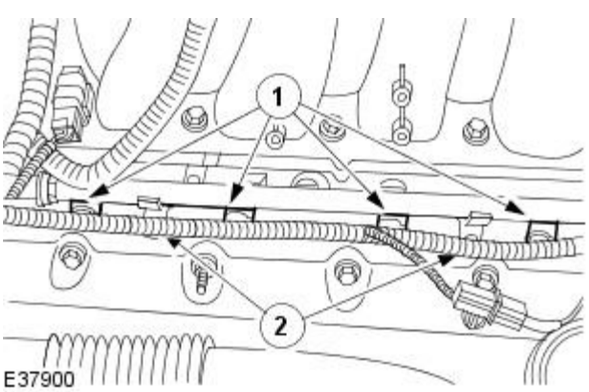

15. Attach the wiring harness.

1. Connect the electrical connectors.
2. Attach the wiring harness.

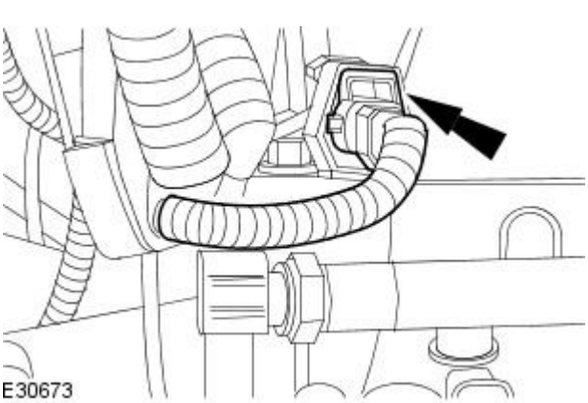

16. Connect the right-hand CMP sensor.

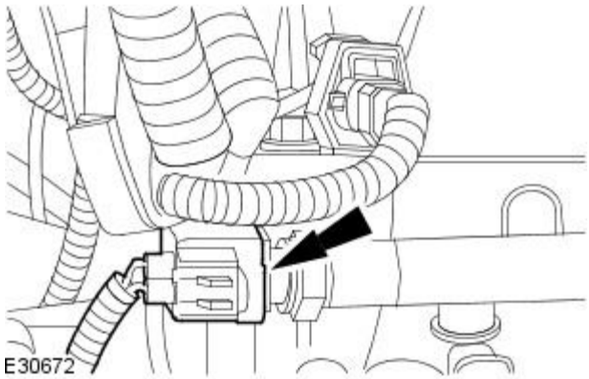

17. Disconnect the fuel temperature sensor electrical connector.

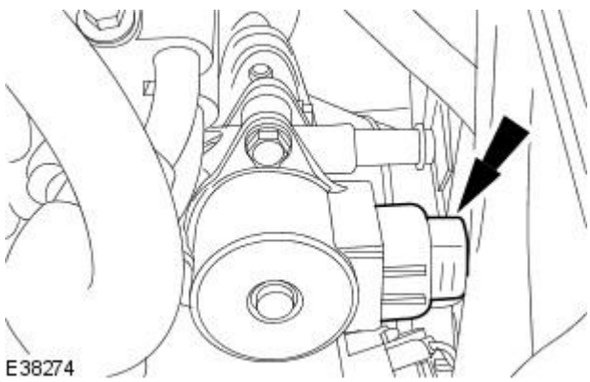

18. Connect the EGR valve electrical connector.

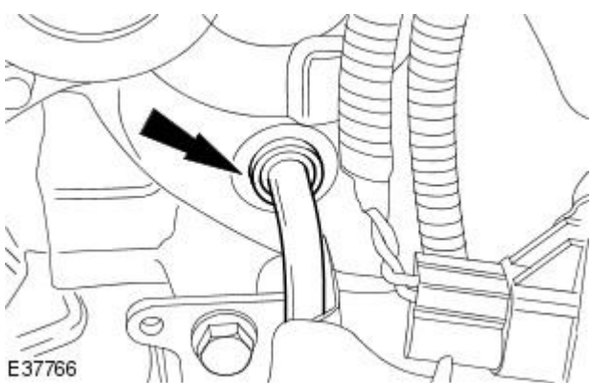

19. Connect the pipe.

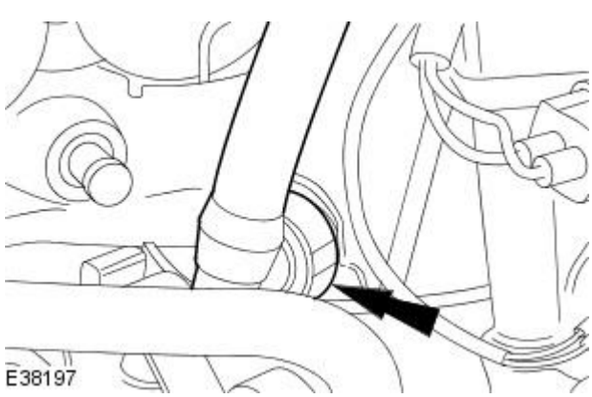

20. Connect the hose.

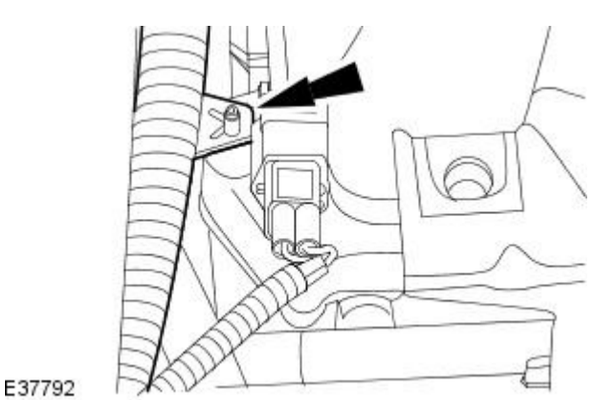

21. Attach the engine wiring harness.

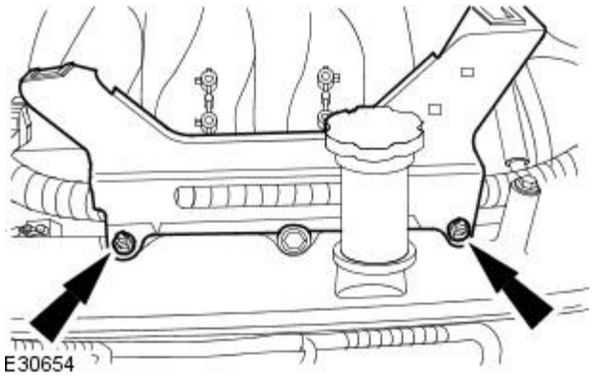

22. NOTE: Left hand shown, right hand similar.

Install the engine cover retaining brackets.

- Detach the knock sensor (KS) electrical connectors.
- Tighten to 6 Nm.

23. Install the air cleaner outlet pipe.
For additional information, refer to Section 303-12 Intake Air Distribution and Filtering.

24. Check and top up the cooling system.

Engine - Oil Cooler

In-vehicle Repair

Removal

Vehicles built up to 05/2004

1. Raise and support the vehicle.
   For additional information, refer to: Using the Workshop Jack (100-02 Jacking and Lifting, General Procedures).

Vehicles built 06/2004 onwards

2. Remove the radiator splash shield.
   For additional information, refer to: Radiator Splash Shield (501-02 Front End Body Panels, Removal and Installation).

All vehicles

3. Detach the power steering oil cooler

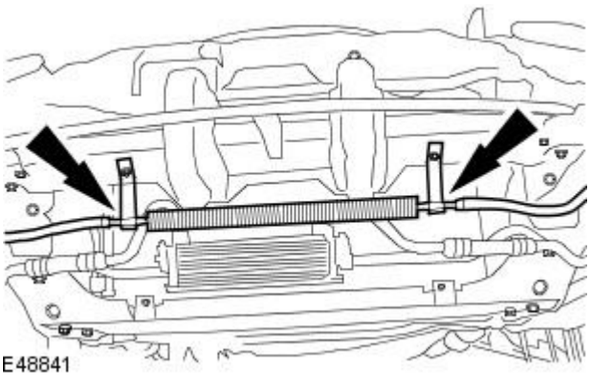

E48841

4. Detach the oil cooler lines.
   - Remove and discard the oil cooler O ring seals.

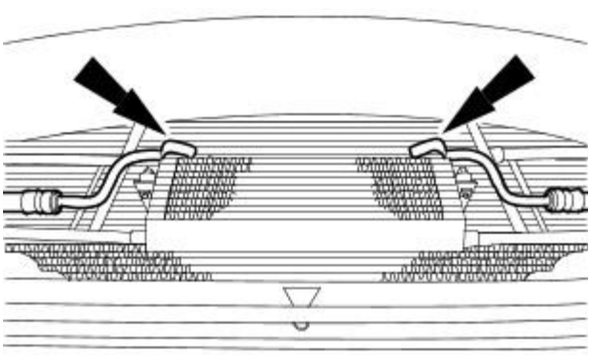

E37715

5. Remove the oil cooler.

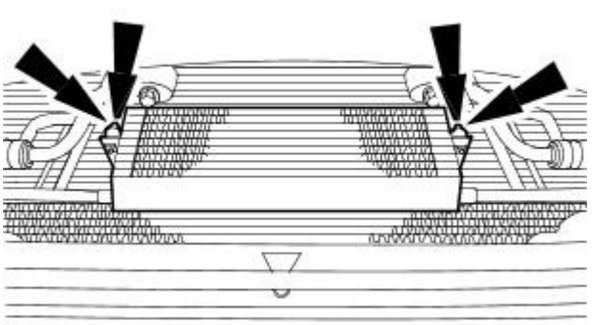

E37716

Installation

All vehicles

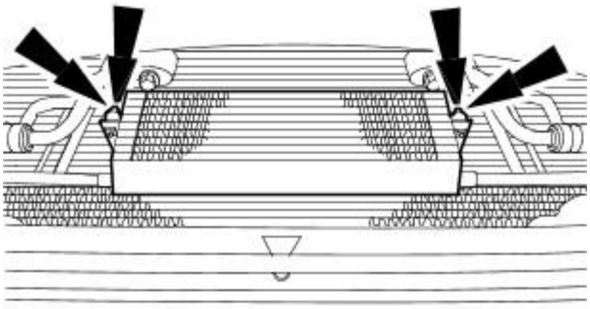
E37716

1. Install the oil cooler.
   - Tighten to 7 Nm.

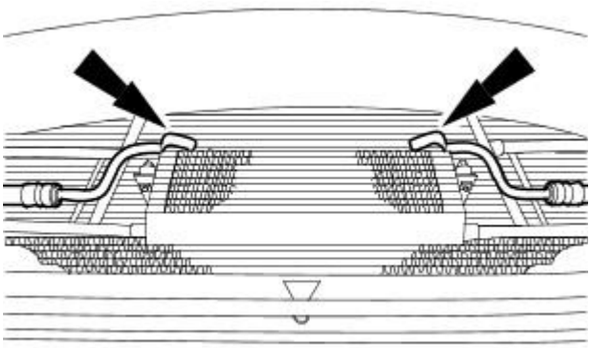
E37715

2. Attach the oil cooler lines.
   - Install new oil cooler pipe O ring seals.
   - Tighten to 20 Nm.

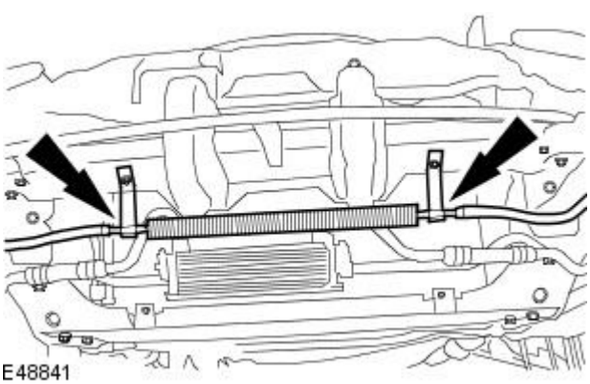
E48841

3. Attach the power steering oil cooler

Vehicles built 06/2004 onwards

4. Install the radiator splash shield.
   For additional information, refer to: Radiator Splash Shield (501-02 Front End Body Panels, Removal and Installation).

Vehicles built up to 05/2004

5. Lower the vehicle.

All vehicles

6. Check and top up the engine oil level.

Engine - Oil Pan

In-vehicle Repair

Removal

Vehicles without convertible top

1. Raise and support the vehicle.
   For additional information, refer to Section 100-02 Jacking and Lifting.

Vehicles with convertible top

2. Remove the radiator splash shield.
   For additional information, refer to Section 501-02 Front End Body Panels.
3. Remove the underbody front cross brace.

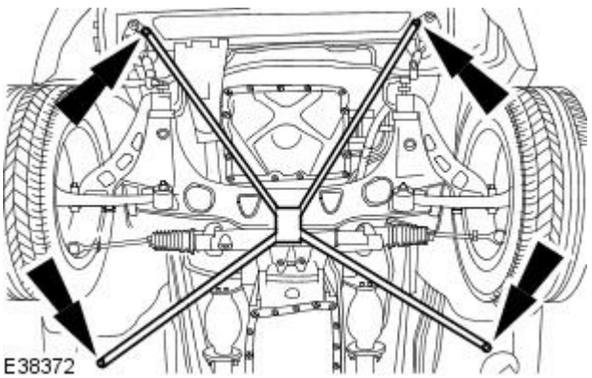

All vehicles

4. Drain the engine oil.
5. Remove the oil pan.
   1. Remove the oil pan retaining bolts.
   2. Remove the oil pan from the oil pan body.
   3. Remove the gasket from the oil pan body assembly.

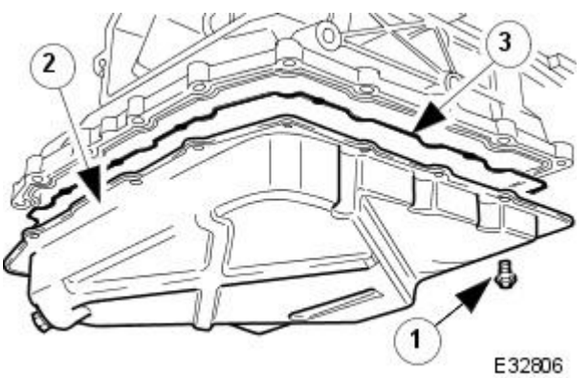

Installation

All vehicles

1. NOTE: Make sure all surfaces are clean.

   Install the oil pan gasket to the oil pan body assembly.

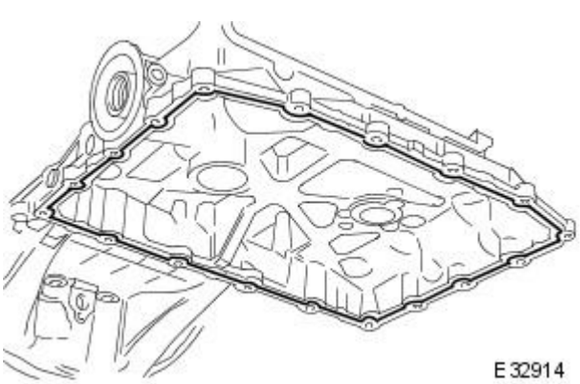

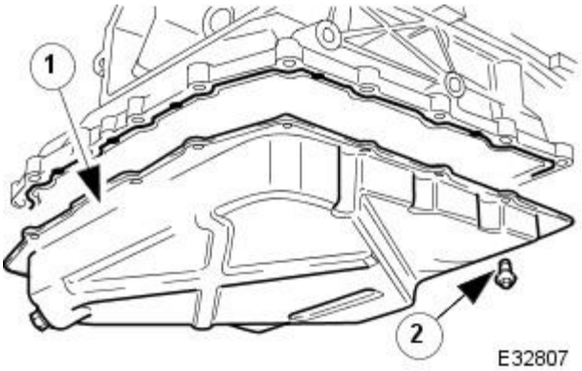

2. Install the oil pan.

1. Install the oil pan.
2. Install, but do not fully tighten the retaining bolts.

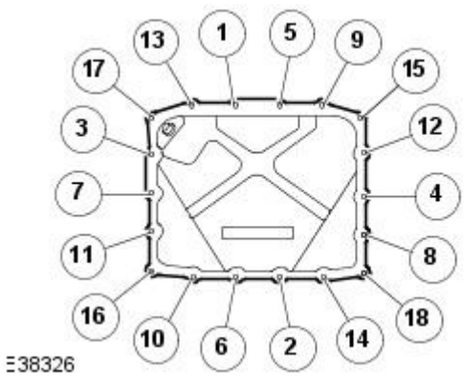

3. Tighten to 12 Nm, in the sequence indicated.

4. A new oil pan is supplied with the drain plug installed. Check that the drain plug is tightened to 25 Nm.

Vehicles with convertible top

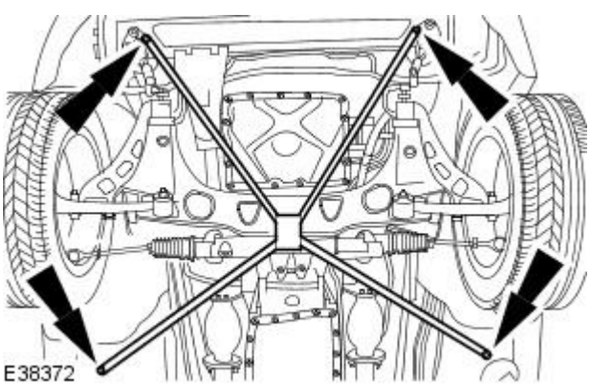

5. Remove the underbody front cross brace.

6. Install the radiator splash shield.
For additional information, refer to Section 501-02 Front End Body Panels.

Vehicles without convertible top

7. Lower the vehicle.

All vehicles

8. Fill the engine with engine oil to the correct level.

Engine - Oil Pressure Switch

In-vehicle Repair

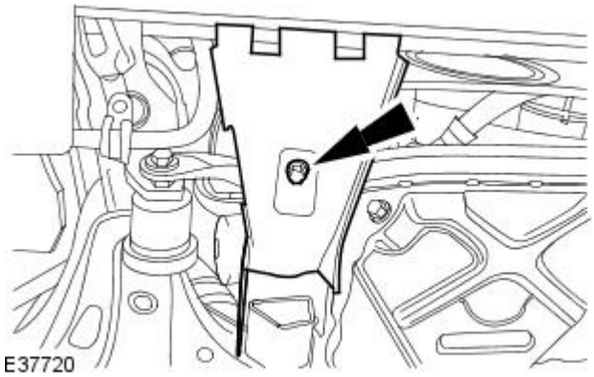

1. Raise and support the vehicle.
   For additional information, refer to Section 100-02 Jacking and Lifting.
2. Remove the generator lower cooling duct.

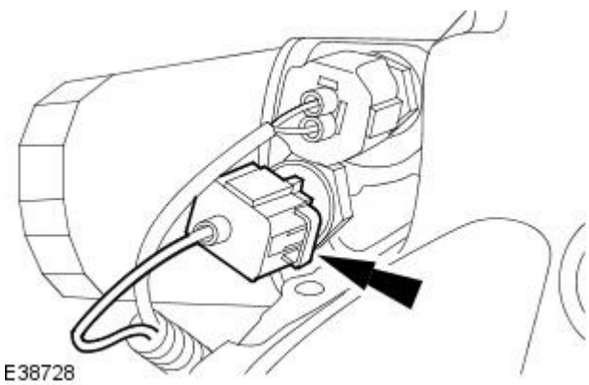

3. Disconnect the oil pressure switch electrical connector.

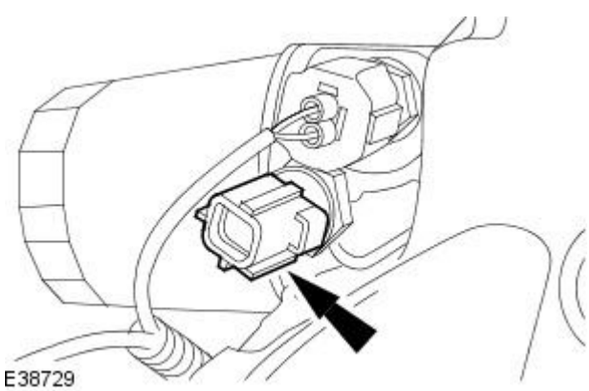

4. Remove the oil pressure switch.

Installation

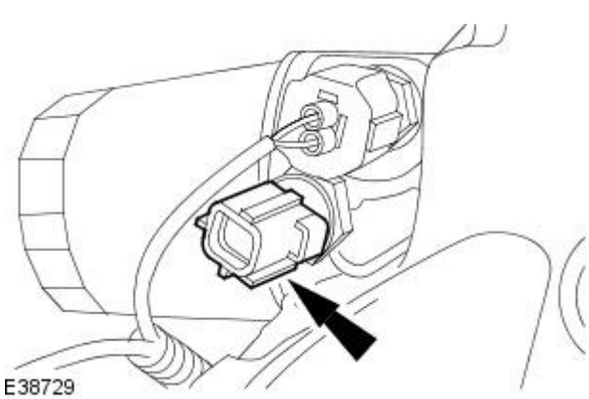

1. NOTE: Apply a small bead of sealant meeting Jaguar specification to the first three threads of the oil temperature sensor.

   Install the oil pressure switch.

   - Tighten to 15 Nm.

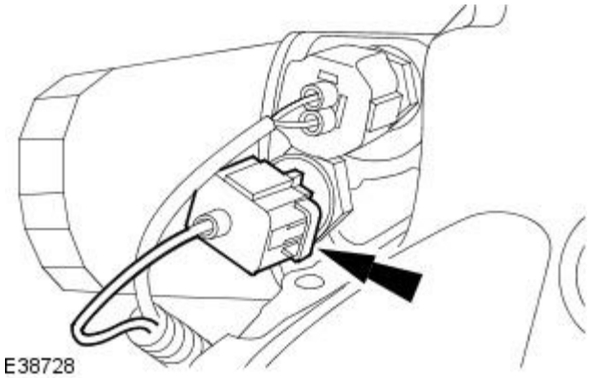

2. Connect the oil pressure switch electrical connector.

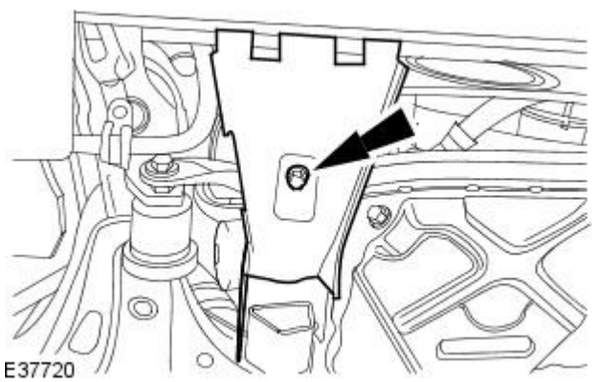

3. Install the generator lower cooling duct.

- Tighten to 2 Nm.

4. Lower the vehicle.

5. Check and, if necessary, top up the engine oil.

Engine - Oil Pump

In-vehicle Repair

Special Tool(s)	
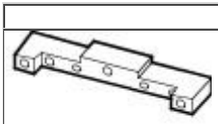 303-530	Camshaft setting 303-530
303-532	Timing chain tensioning tool 303-532
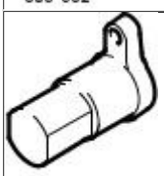 303-645	Crankshaft setting, main tool 303-645

Removal

All vehicles

1. Remove the engine front cover.
   For additional information, refer to Engine Front Cover in this section.
2. Remove the spark plugs.
3. Remove the oil pan.
   For additional information, refer to Oil Pan in this section.
4. Remove the oil strainer.
   - Remove and discard the O-ring seal.

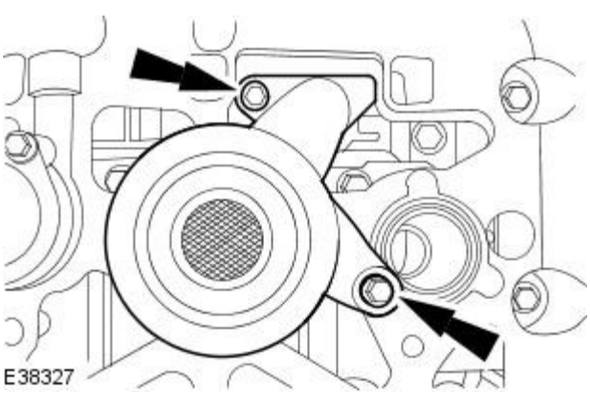

5. Disconnect the crankshaft position sensor electrical connector.

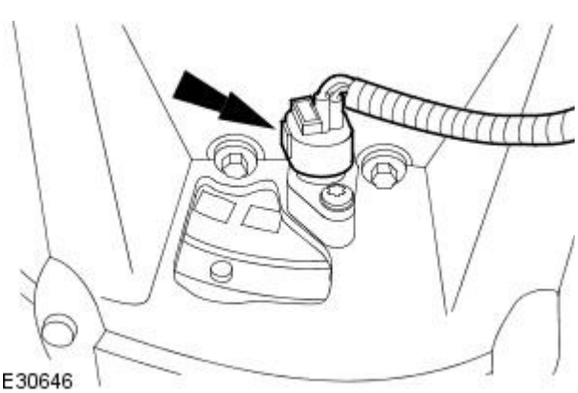

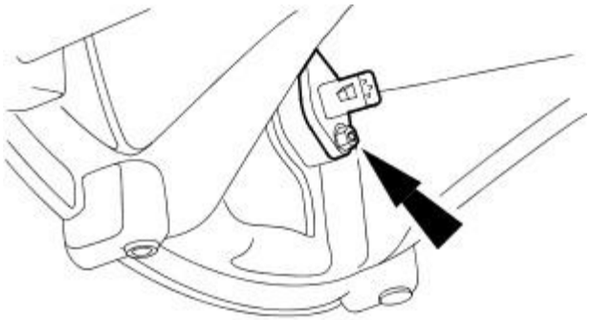

E30694

6. Remove the crankshaft position sensor.

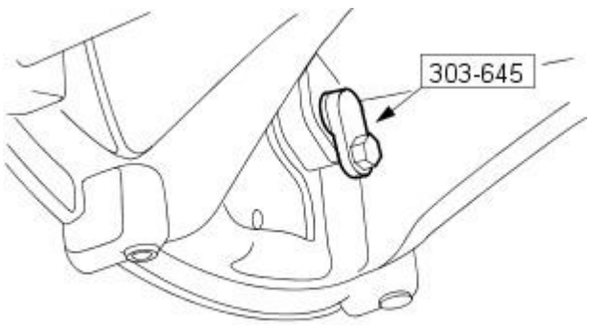

VUJ0002400

7. CAUTIONS:

Make sure the spark plugs are removed to enable the engine to rotate freely.

Do not rotate the crankshaft counterclockwise. The timing chains may bind causing engine damage.

Rotate the crankshaft clockwise to position the engine to top dead center (TDC) No. 1 cylinder

Install the special tool 303-645.

Vehicles without supercharger

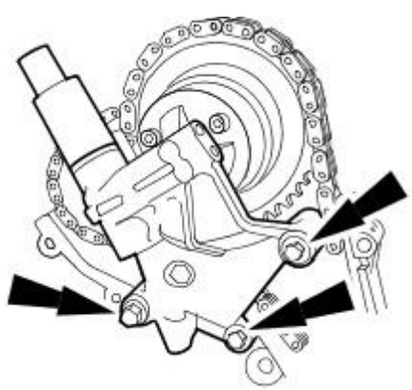

E30699

8. Remove the right-hand variable camshaft timing oil control unit housing.

- Remove and discard the O-ring seals.

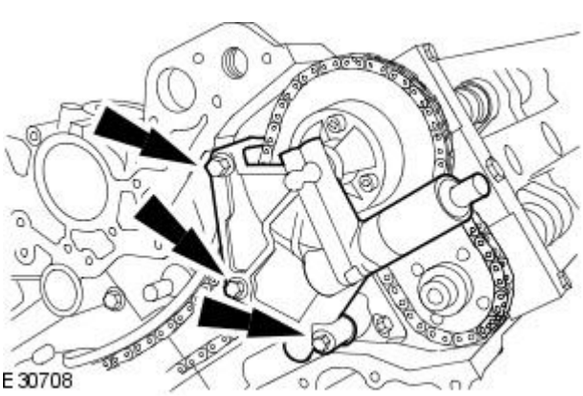

E30708

9. Remove the left-hand variable camshaft timing oil control unit housing.

- Remove and discard the O-ring seals.

All vehicles

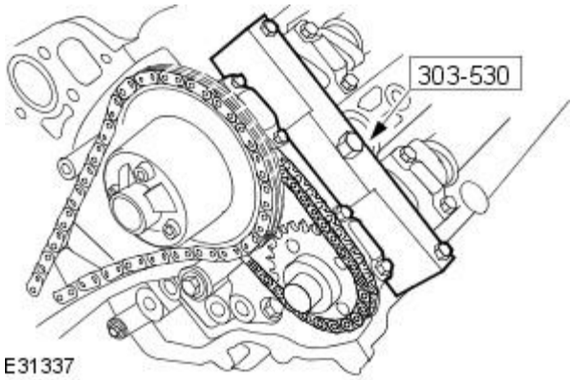

E31337

10. Install the special tool to the left-hand cylinder head.

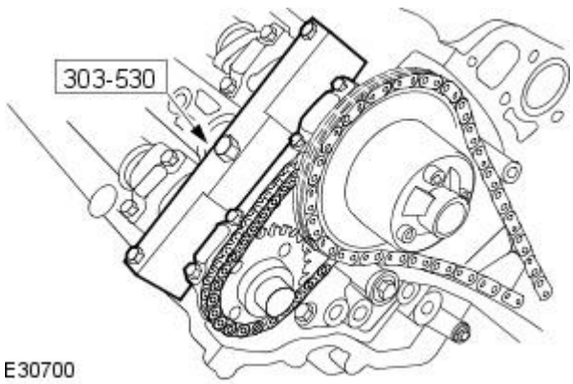

E30700

11. Install the special tool to the Right-hand cylinder head.

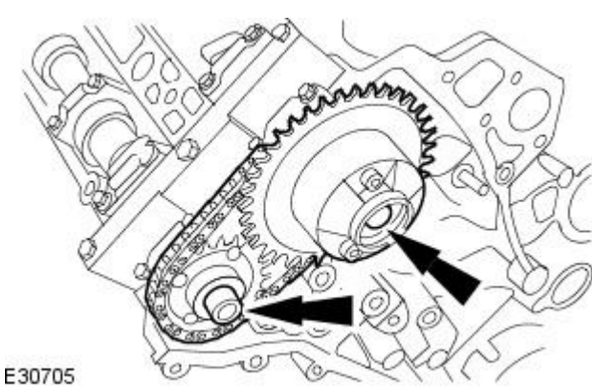
E30705

12. CAUTION: Make sure the secondary timing chain and camshaft sprockets are free to rotate.

Loosen the camshaft sprockets.

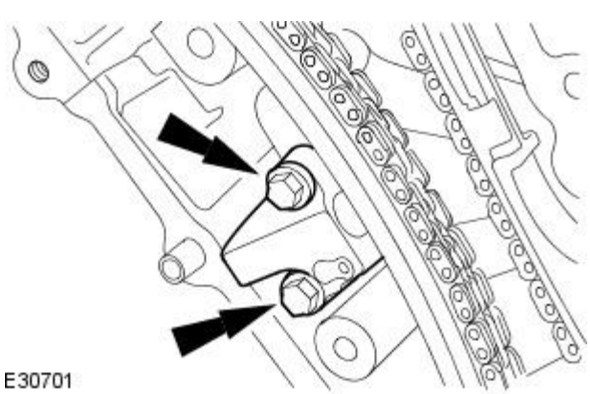
E30701

13. Remove the primary timing chain tensioner assembly.

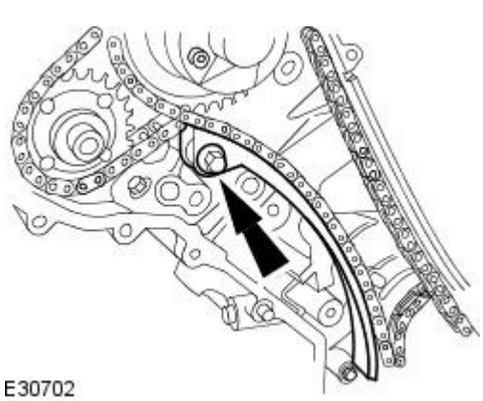
E30702

14. Remove the primary timing chain tensioner guide.

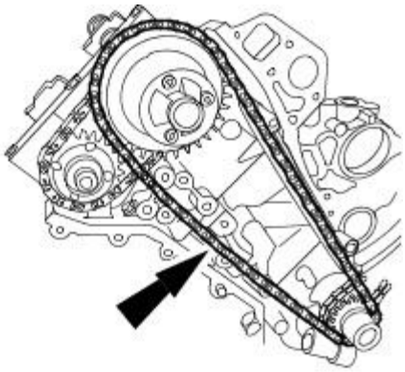

E30703

15. Remove the primary timing chain.

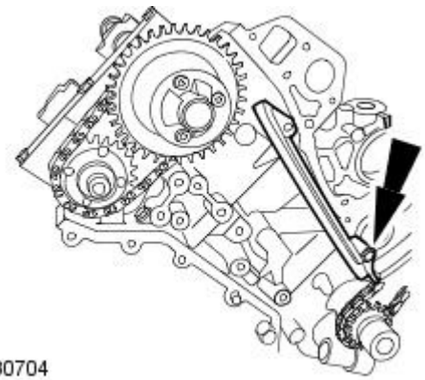

E30704

16. Remove the primary timing chain guide.

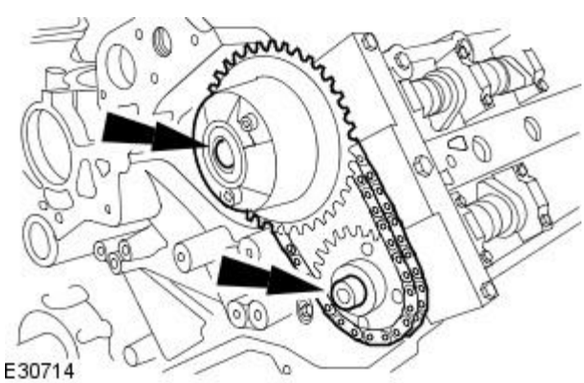

E30714

17. CAUTION: Make sure the secondary timing chain and camshaft sprockets are free to rotate.

Loosen the camshaft sprockets.

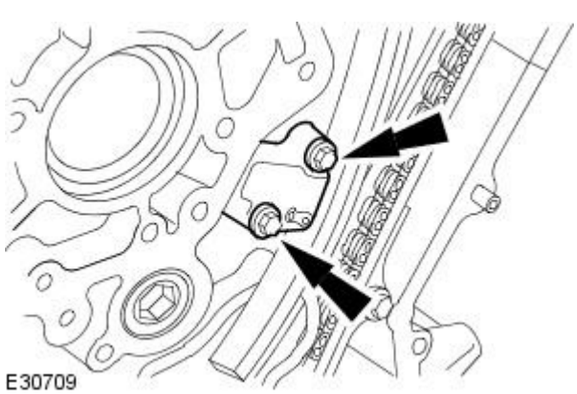

E30709

18. Remove the primary timing chain tensioner assembly.

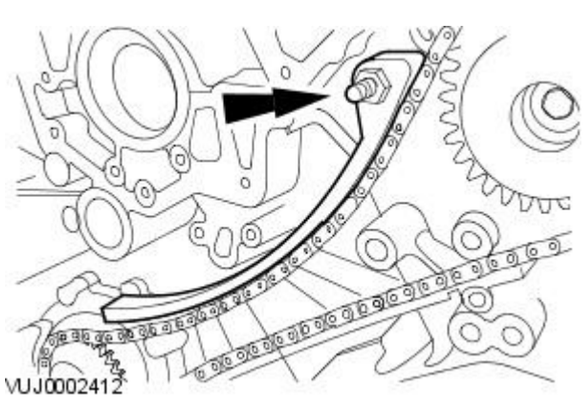

VUJ0002412

19. Remove the primary timing chain tensioner guide.

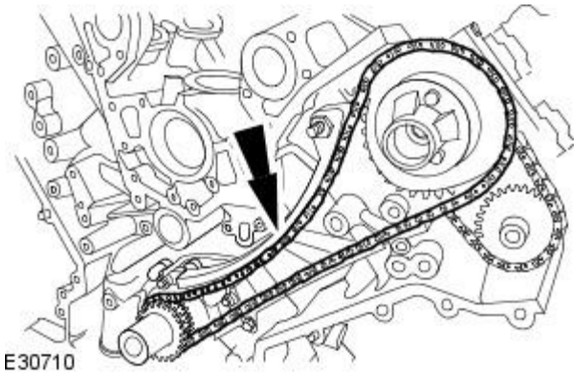

20. Remove the primary timing chain.

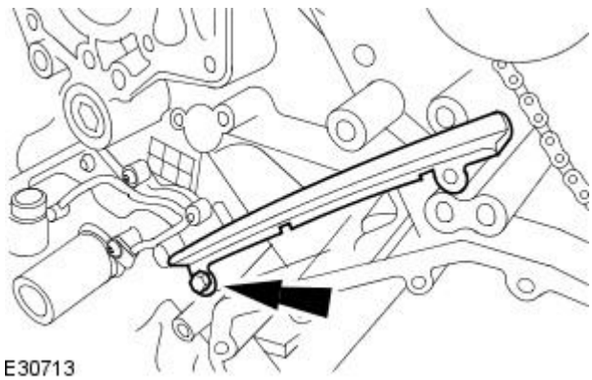

21. Remove the primary timing chain tensioner guide.

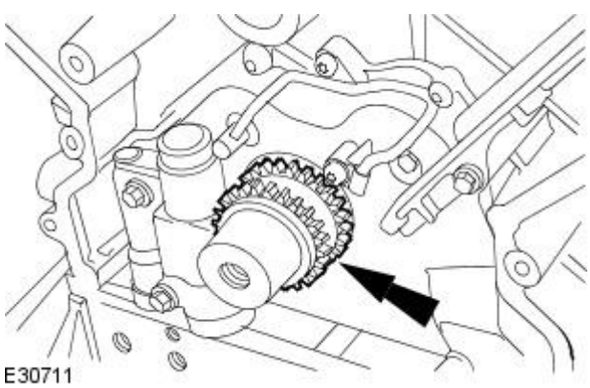

22. Remove the crankshaft sprocket.

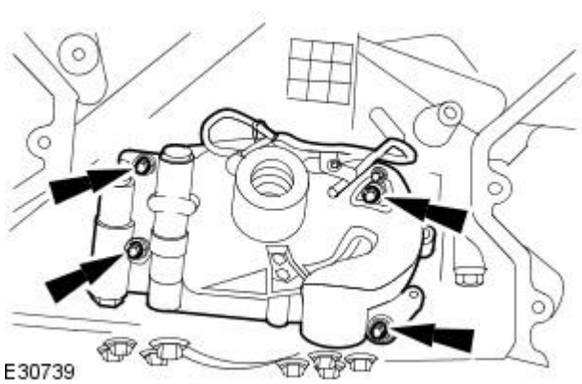

23. Remove the oil pump.

- Remove and discard the gasket.

Installation

All vehicles

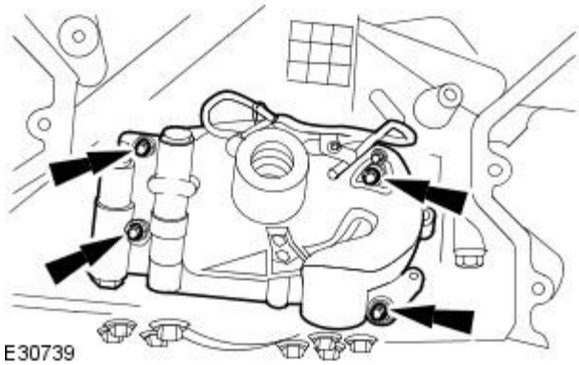

1. Install the oil pump.

- Install a new gasket.
- Tighten to 12 Nm.

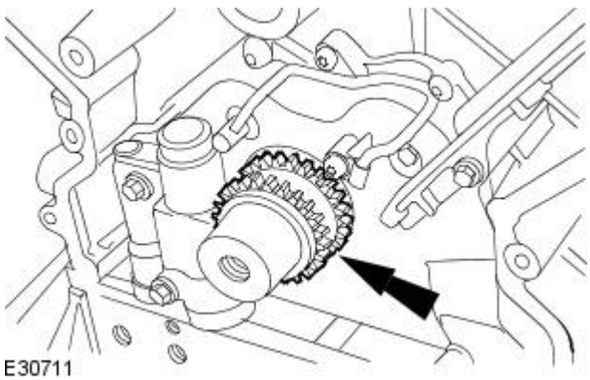

2. Install the crankshaft sprocket.

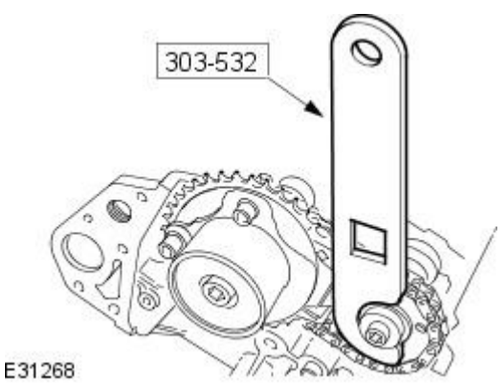

3. Install the timing chain tensioning tool 303-532 to the exhaust camshaft sprocket.

- Reposition the camshaft sprockets for the most advantageous position for use of the tool.

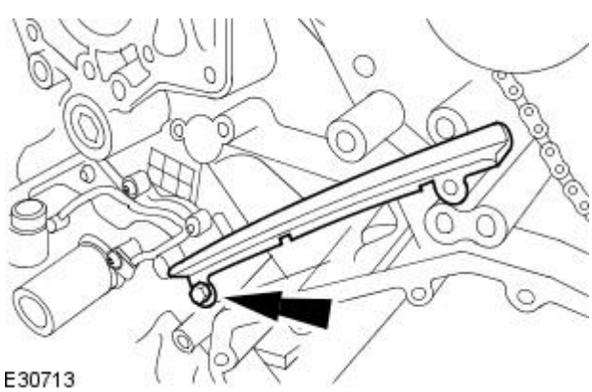

4. Install the primary timing chain tensioner guide.

- Tighten to 12 Nm.

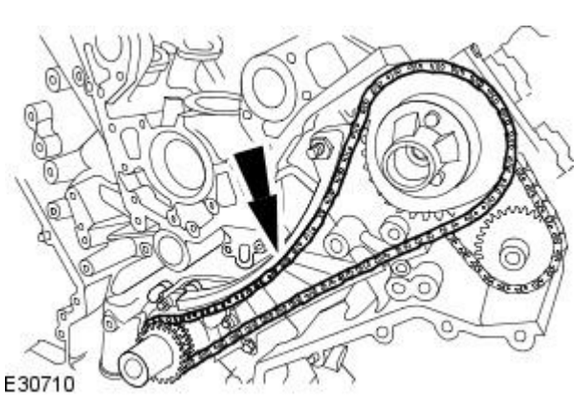

5. CAUTION: Make sure the timing chain slack is on the tensioned side of the timing chain.

Install the primary timing chain.

- Install the primary chain over the crankshaft sprocket and the intake sprocket.

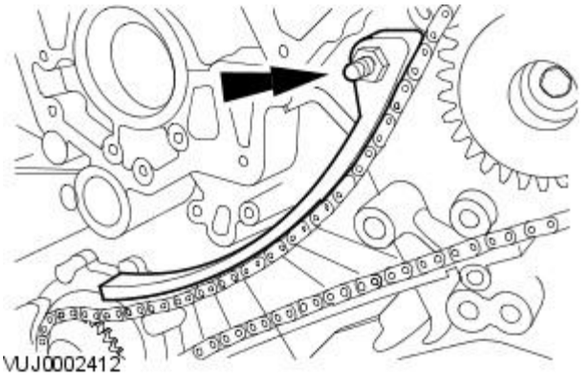

6. Install the primary timing chain tensioner guide.

- Tighten to 12 Nm.

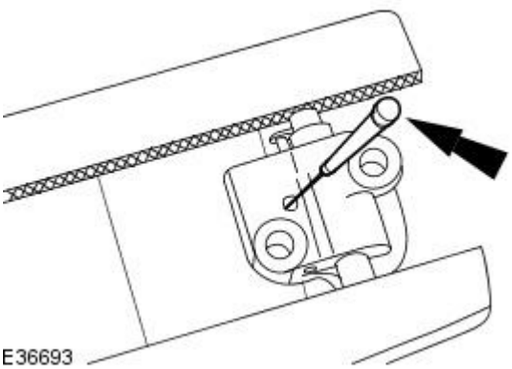

7. CAUTION: During timing chain tensioner compression, do not release the ratchet stem until the timing chain tensioner piston is fully bottomed in its bore or damage to the ratchet stem will result.

• NOTE: The retaining tool must remain in the timing chain tensioner until the timing chain tensioner is installed to the engine with the piston bottomed in the bore.

Using a suitable tool, hold the left-hand timing chain tensioner ratchet lock mechanism away from the ratchet stem.

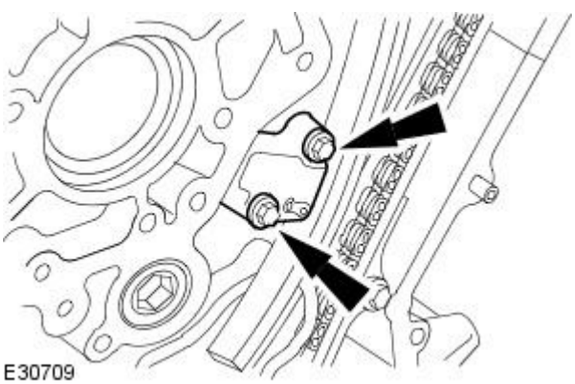

8. Install the primary timing chain tensioner assembly.

- Tighten to 12 Nm.

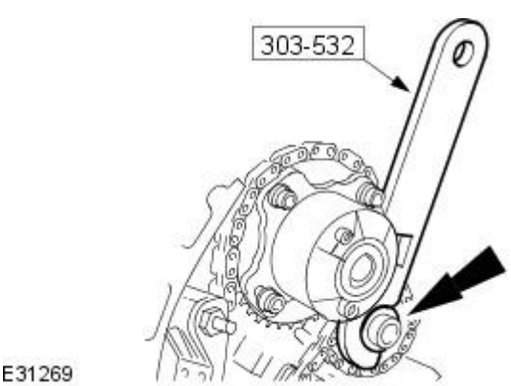

9. CAUTION: While applying the opposing force to sprocket and chain, tighten the sprocket bolt.

Using the special tool apply force to the tool in an anti-clockwise direction to tension the primary timing chain on its drive side.

- Tighten to 120 Nm.

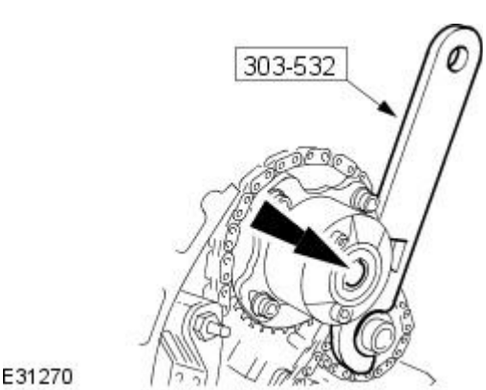

10. CAUTION: While applying the opposing force to sprocket and chain, tighten the sprocket bolt.

Using the special tool apply force to the tool in an anti-clockwise direction.

- Tighten to 120 Nm.

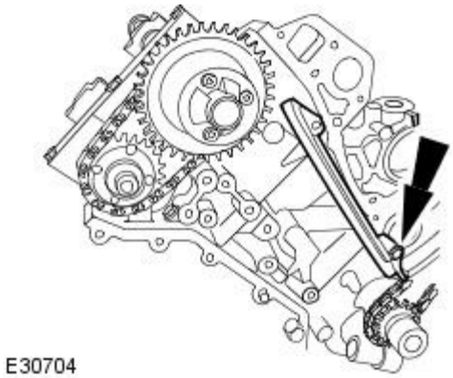

E30704

11. Install the primary timing chain guide.

- Tighten to 12 Nm.

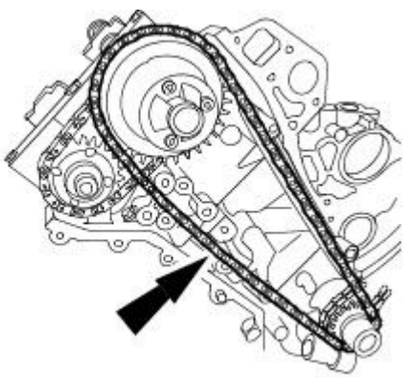

E30703

12. CAUTION: Make sure the timing chain slack is on the tensioned side of the timing chain.

Install the primary timing chain.

- Install the primary chain over the crankshaft sprocket and the intake sprocket.

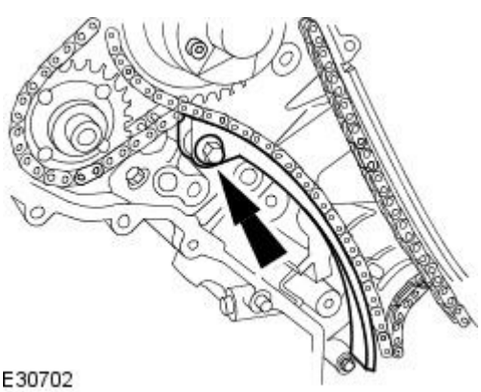

E30702

13. Install the primary timing chain tensioner guide.

- Tighten to 12 Nm.

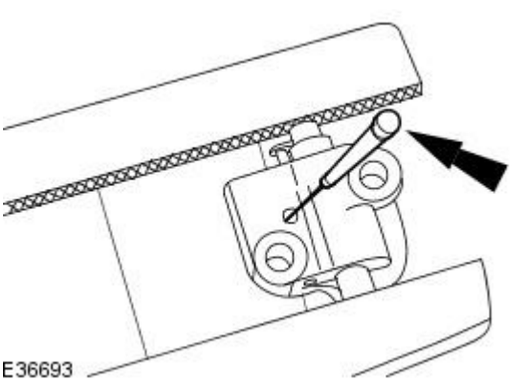

E36693

14. CAUTION: During timing chain tensioner compression, do not release the ratchet stem until the timing chain tensioner piston is fully bottomed in its bore or damage to the ratchet stem will result.

• NOTE: The retaining tool must remain in the timing chain tensioner until the timing chain tensioner is installed to the engine with the piston bottomed in the bore.

Using a suitable tool, hold the right-hand timing chain tensioner ratchet lock mechanism away from the ratchet stem.

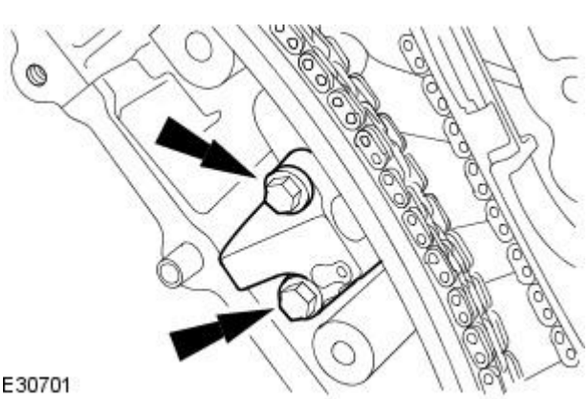

E30701

15. Install the primary timing chain tensioner assembly.

- Tighten to 12 Nm.

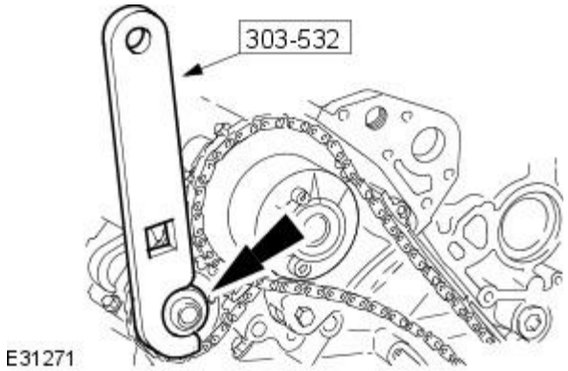

E31271

16. CAUTION: While applying the opposing force to sprocket and chain, tighten the sprocket bolt.

Using the special tool apply force to the tool in an anti-clockwise direction to tension the primary timing chain on its drive side.

- Tighten to 120 Nm.

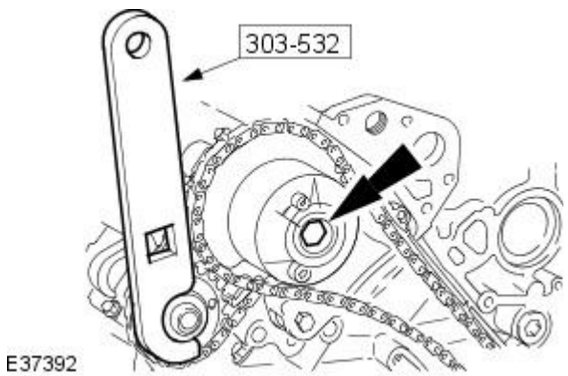

E37392

17. CAUTION: While applying the opposing force to sprocket and chain, tighten the sprocket bolt.

Using the special tool apply force to the tool in an anti-clockwise direction.

- Tighten to 120 Nm.

18. Release the tension in the left-hand timing chain tensioner.

- Remove the retaining tool.

19. Release the tension in the right-hand timing chain tensioner.

- Remove the retaining tool.

20. Remove the special tool from the right-hand cylinder head.

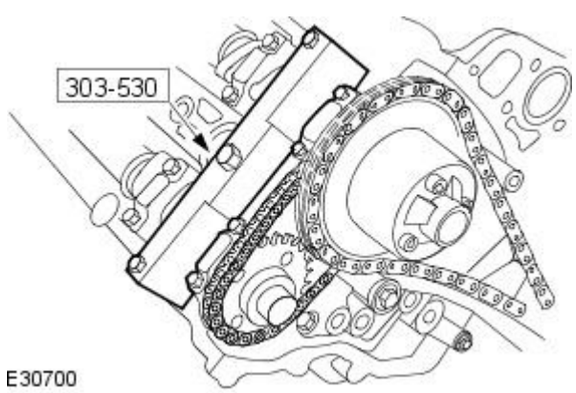

E30700

21. Remove the special tool from the left-hand cylinder head.

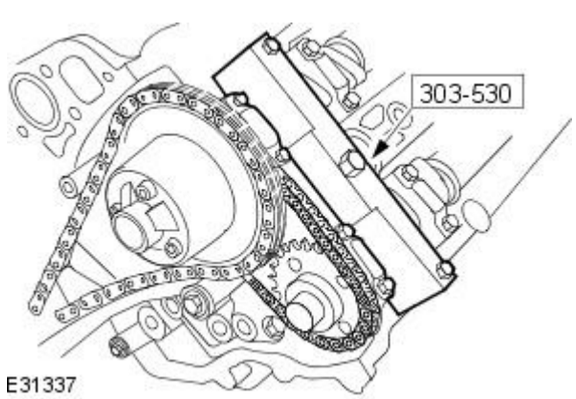

E31337

Vehicles without supercharger

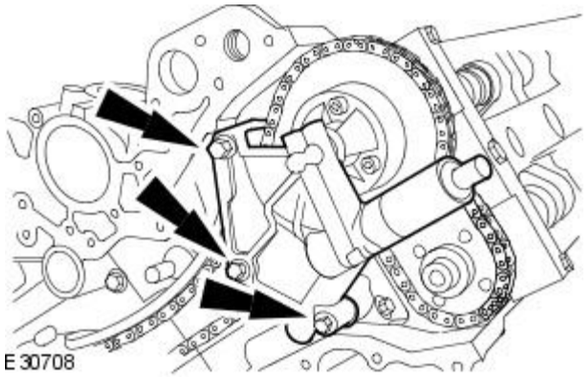
E30708

22. Install the left-hand variable camshaft timing oil control unit housing.

- Install new O-ring seals.
- Tighten to 22 Nm.

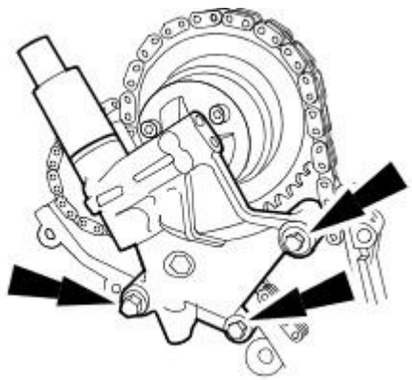
E30699

23. Install the right-hand variable camshaft timing oil control unit housing.

- Install new O-ring seals.
- Tighten to 22 Nm.

All vehicles

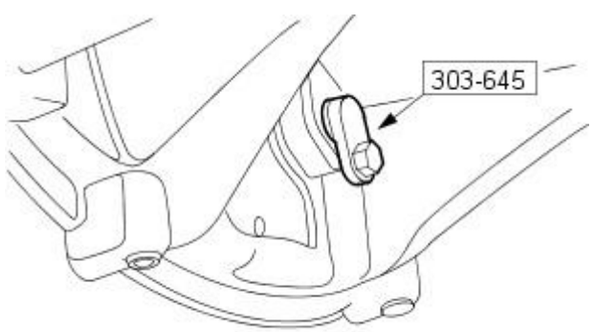

VUJ0002400

24. Remove the special tool.

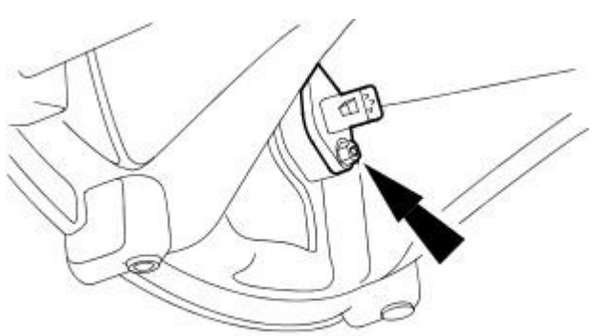
E30694

25. Install the crankshaft position sensor.

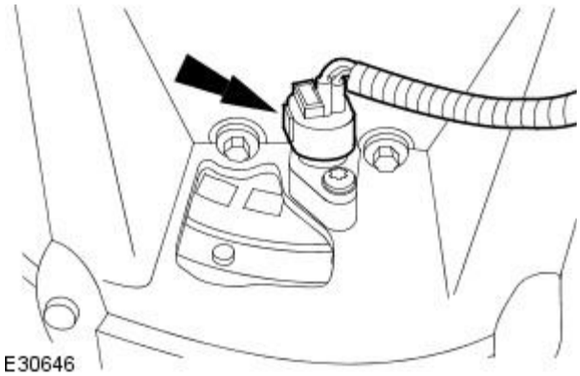

26. Connect the crankshaft position sensor electrical connector.

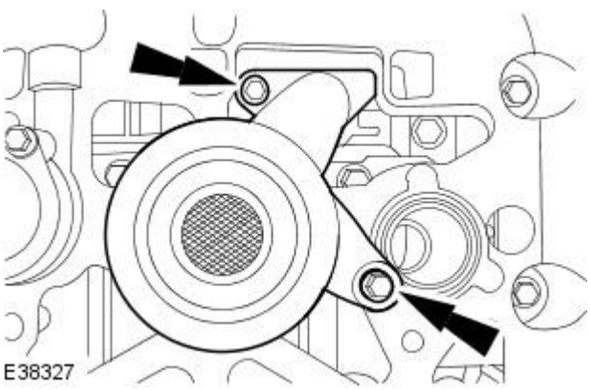

27. Install the oil strainer.

- Install new O-ring seals.
- Tighten to 12 Nm.

28. Install the oil pan.
For additional information, refer to Oil Pan in this section.

29. Install the spark plugs.

30. Install the engine front cover.
For additional information, refer to Engine Front Cover in this section.

Published: 11-May-2011

Engine - Secondary Timing Chain Tensioner

In-vehicle Repair

Special Tool(s)	
303-1077A 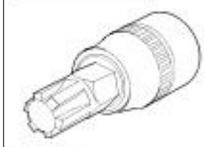 E76151	12mm Ribe bit socket 303-1077A
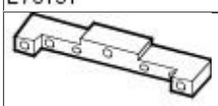 303-530	Camshaft setting tool 303-530
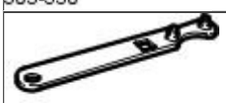 DWST021	Timing chain tensioning tool 303-532
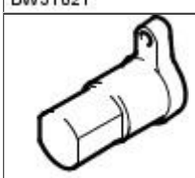 DWST032	Crankshaft setting, main tool 303-645

Removal

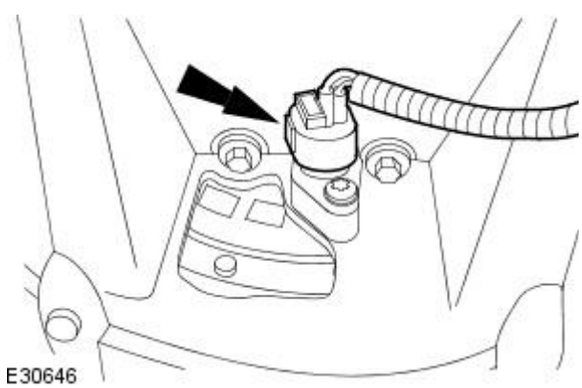

E30646

1. Disconnect the crankshaft position (CKP) sensor electrical connector.

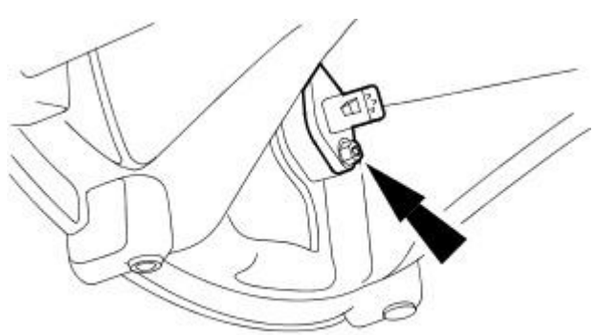

E30694

2. Remove the CKP sensor.

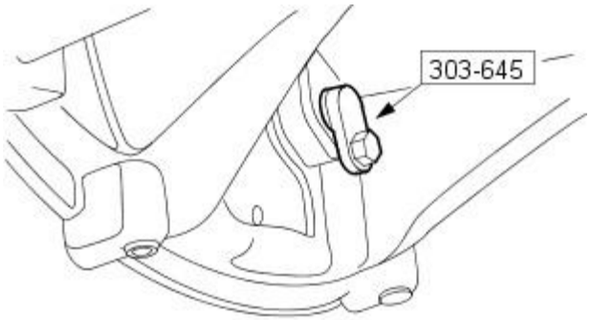

VUJ0002400

3. Install the special tool.

4. Remove the valve cover. For additional information, refer to: (303-01 Engine)

Valve Cover LH (In-vehicle Repair),
Valve Cover RH (In-vehicle Repair).

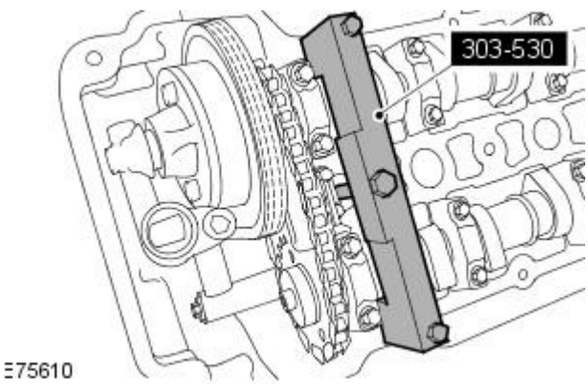

E75610

5. NOTE: Left-hand shown, right-hand similar.

Install the special tool to the left-hand cylinder head.

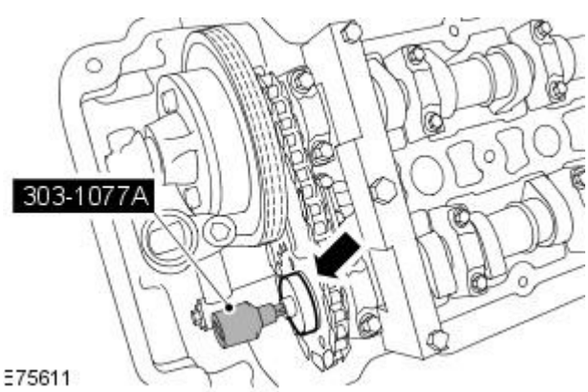

E75611

6. CAUTION: Discard the bolt.

- NOTE: Left-hand shown, right-hand similar.

Using the special tool, remove the exhaust camshaft sprocket retaining bolt.

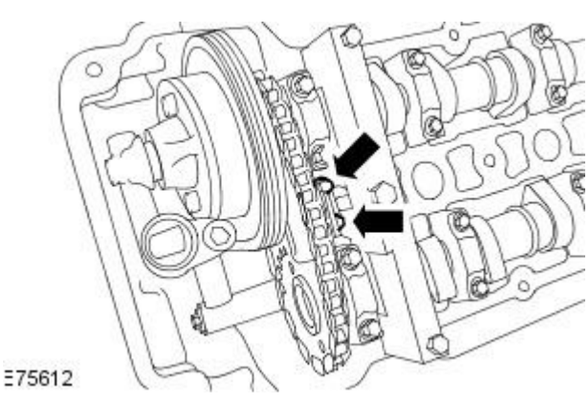

E75612

7. NOTE: Left-hand shown, right-hand similar.

Remove the secondary timing chain tensioner retaining bolts.

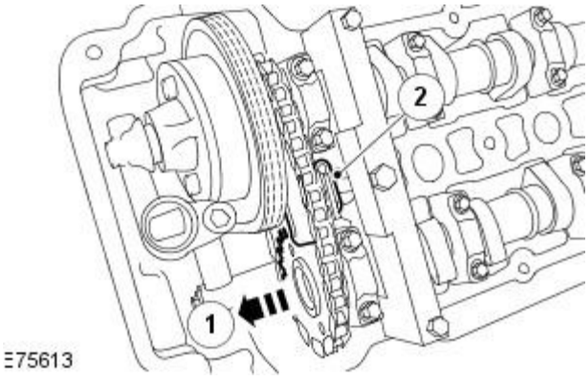

8. NOTE: Left-hand shown, right-hand similar.

Remove the secondary timing chain tensioner.

1. Reposition the exhaust camshaft sprocket and secondary timing chain.
2. Remove the secondary timing chain tensioner.

Installation

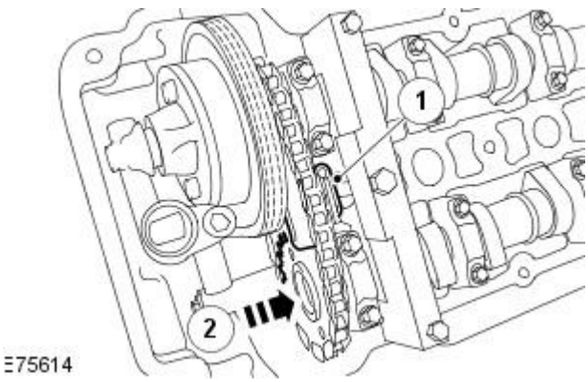

1. NOTE: Left-hand shown, right-hand similar.

Install the secondary timing chain tensioner.

1. Install the secondary timing chain tensioner.
2. Reposition the exhaust camshaft sprocket and secondary timing chain.

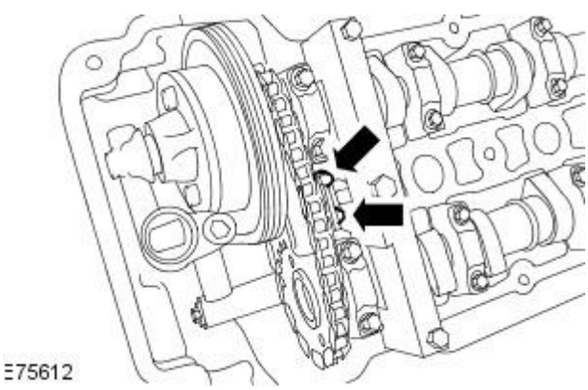

2. NOTE: Left-hand shown, right-hand similar.

Install the secondary timing chain tensioner retaining bolts.

- Tighten to 12 Nm.

3. Release the tension in the secondary timing chain tensioner.

- Remove the retaining tool.

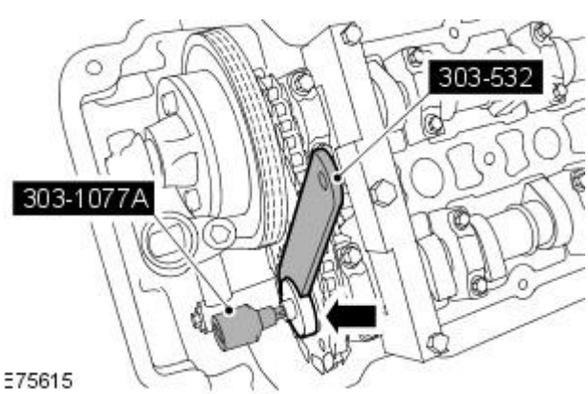

4. CAUTION: Make sure that a new bolt is installed.

• NOTE: Left-hand shown, right-hand similar.

Using the special tools, install the exhaust camshaft sprocket retaining bolt.

- Tighten to 20 Nm + 90°.

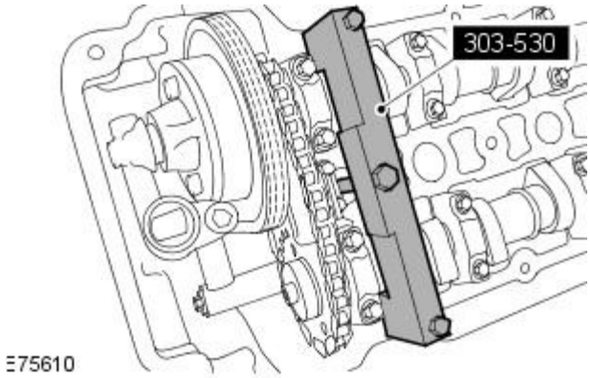

E75610

5. NOTE: Left-hand shown, right-hand similar.

Remove the special tool.

6. Install the valve cover. For additional information, refer to: (303-01 Engine)

Valve Cover LH (In-vehicle Repair),
Valve Cover RH (In-vehicle Repair).

7. Remove the special tool.

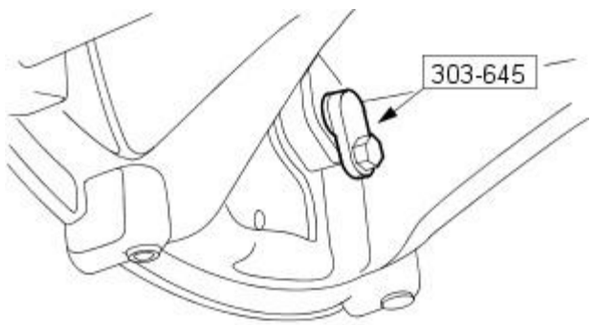

VUJ0002400

8. Install the CKP sensor.

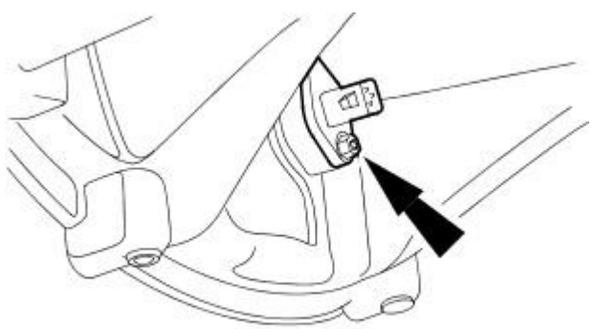

E30694

9. Connect the crankshaft position (CKP) sensor electrical connector.

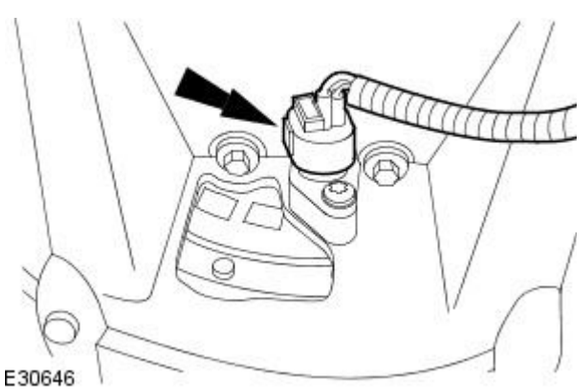

E30646

Engine - Timing Drive Components

In-vehicle Repair

Special Tool(s)	
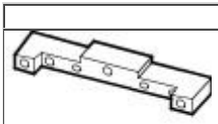 303-530	Camshaft setting tool 303-530
303-532	Timing chain tensioning tool 303-532
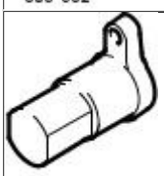 303-645	Crankshaft setting tool 303-645

Removal

All vehicles

1. Remove the engine front cover. For additional information, refer to: Engine Front Cover (303-01 Engine, In-vehicle Repair).
2. Remove the spark plugs.
3. Disconnect the crankshaft position sensor electrical connector.

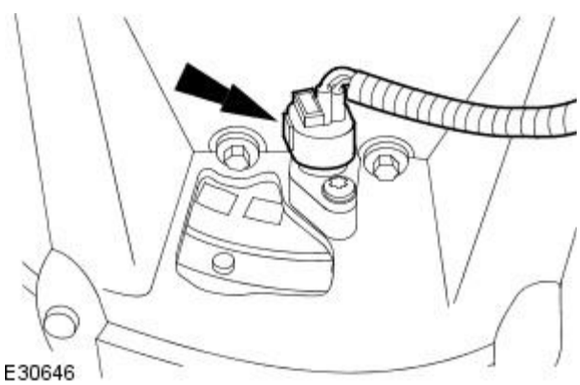

E30646

4. Remove the crankshaft position sensor.

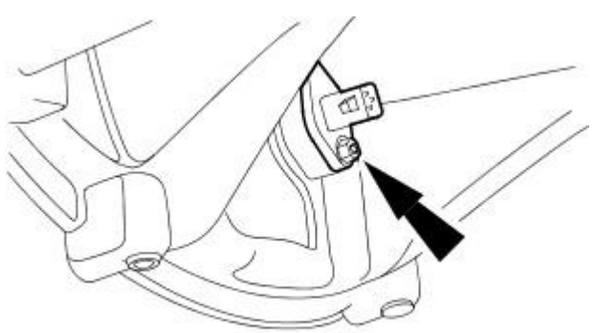

E30694

5. CAUTIONS:

Make sure the spark plugs are removed to enable the engine to rotate freely.

Do not rotate the crankshaft counterclockwise. The timing chains may bind causing engine damage.

Rotate the crankshaft clockwise to position the engine to 45° after top dead center (TDC) No. 1 cylinder

Install the special tool 303-645.

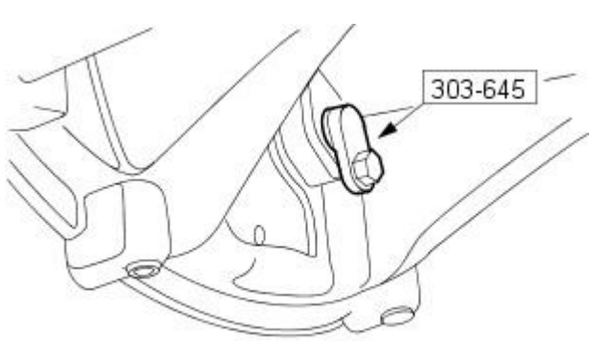

VUJ0002400

Vehicles without supercharger

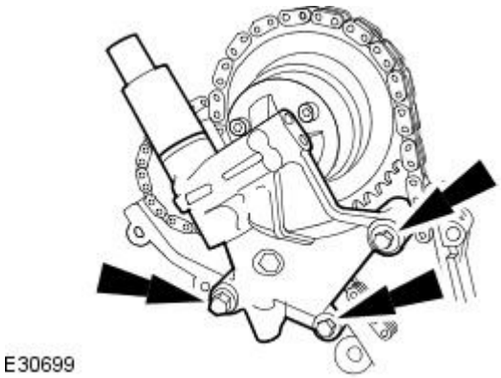
E30699

6. Remove the right-hand variable camshaft timing oil control unit housing.

- Remove and discard the O-ring seals.

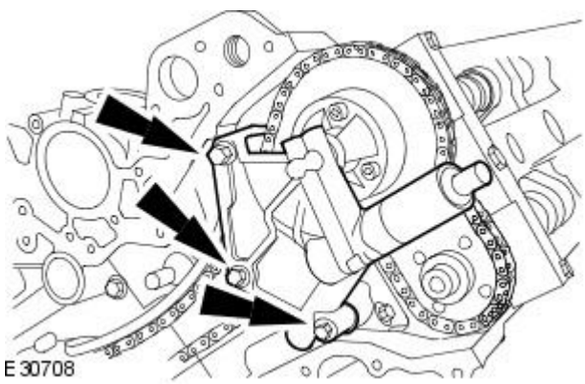
E30708

7. Remove the left-hand variable camshaft timing oil control unit housing.

- Remove and discard the O-ring seals.

All vehicles

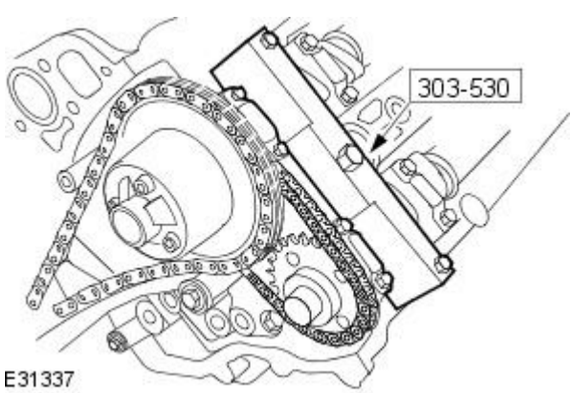

E31337

8. Install the special tool to the left-hand cylinder head.

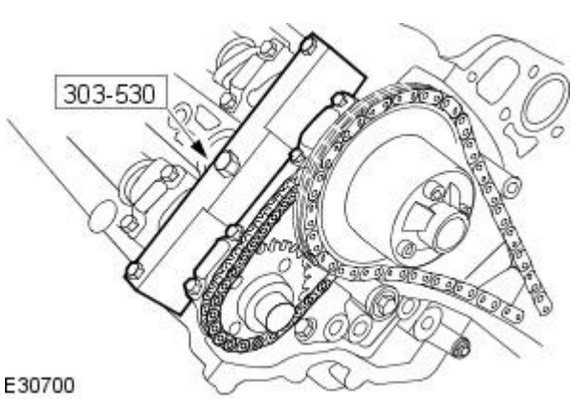

E30700

9. Install the special tool to the Right-hand cylinder head.

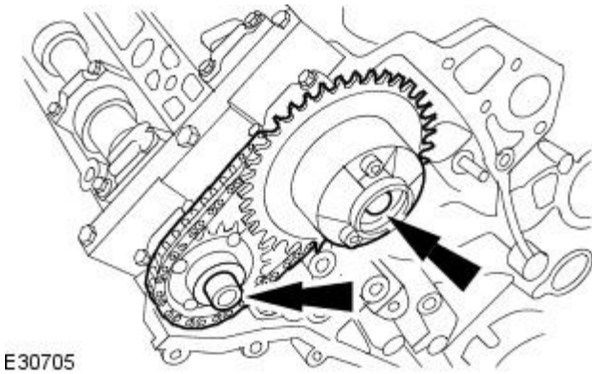

E30705

10. CAUTION: Make sure the secondary timing chain and camshaft sprockets are free to rotate.

Loosen the camshaft sprockets.

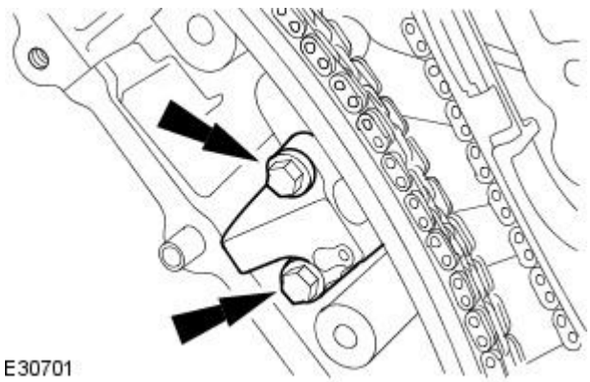

E30701

11. Remove the primary timing chain tensioner assembly.

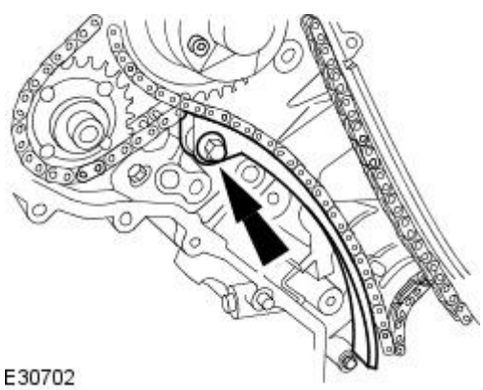

E30702

12. Remove the primary timing chain tensioner blade.

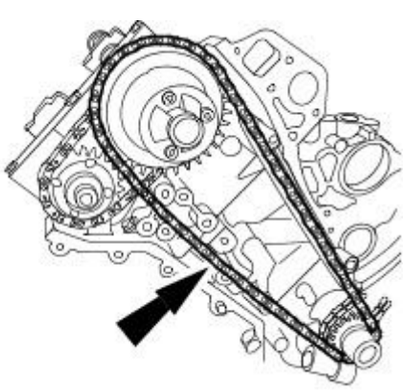

E30703

13. Remove the primary timing chain.

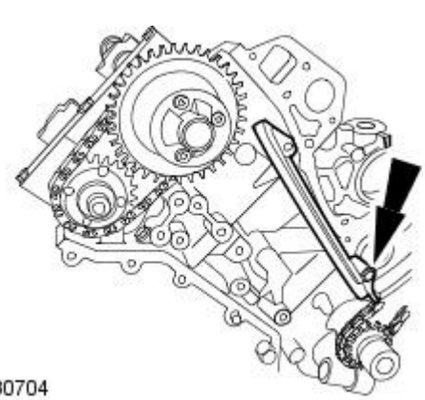

E30704

14. Remove the primary timing chain guide.

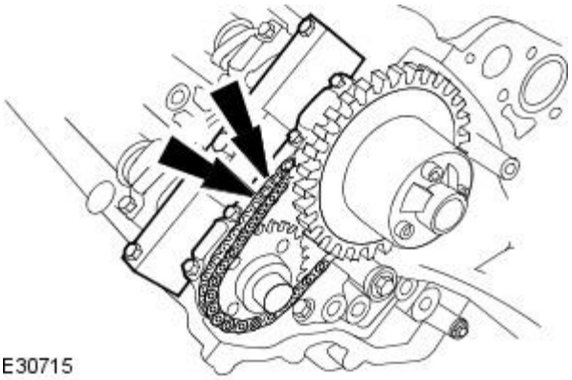
E30715

15. Remove the secondary timing chain tensioner retaining bolts.

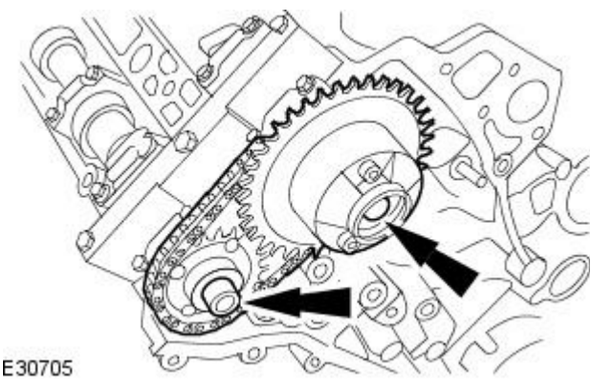
E30705

16. CAUTION: Discard the bolts.

Remove the camshaft sprockets.

- Remove the secondary timing chain tensioner and secondary timing chain from the camshaft sprockets.

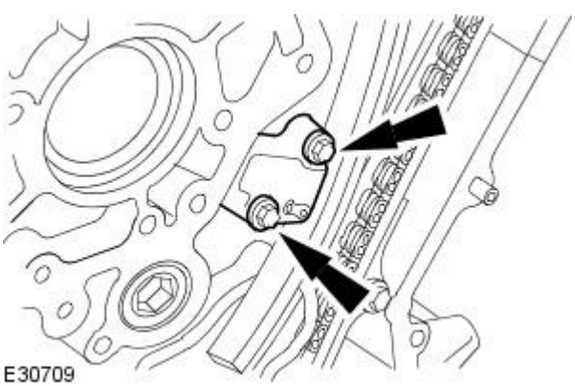
E30709

17. Remove the left hand primary timing chain tensioner assembly.

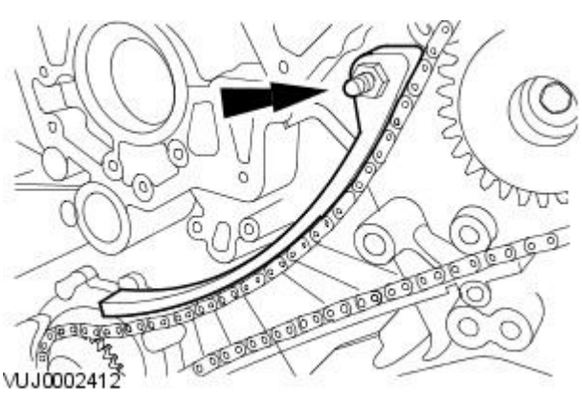
VUJ0002412

18. Remove the left hand primary timing chain tensioner guide.

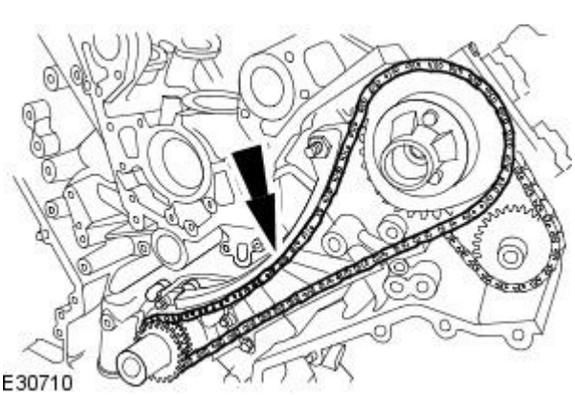
E30710

19. Remove the primary timing chain.

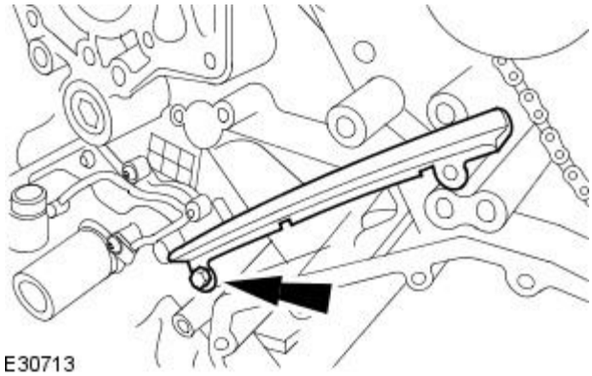
E30713

20. Remove the primary timing chain tensioner guide.

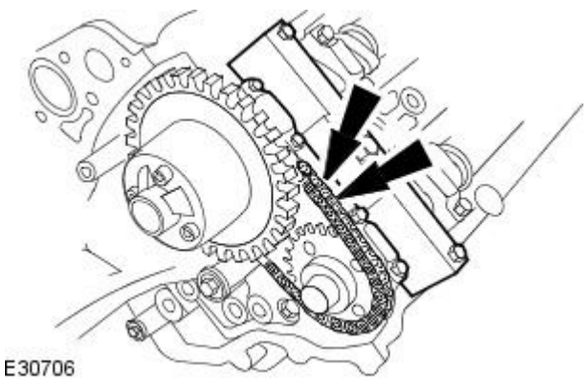
E30706

21. Remove the secondary timing chain tensioner retaining bolts.

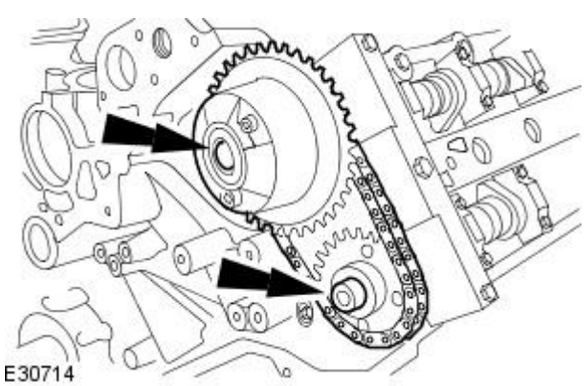
E30714

22. CAUTION: Discard the bolts.

Remove the camshaft sprockets.

- Remove the secondary timing chain tensioner and secondary timing chain from the camshaft sprockets.

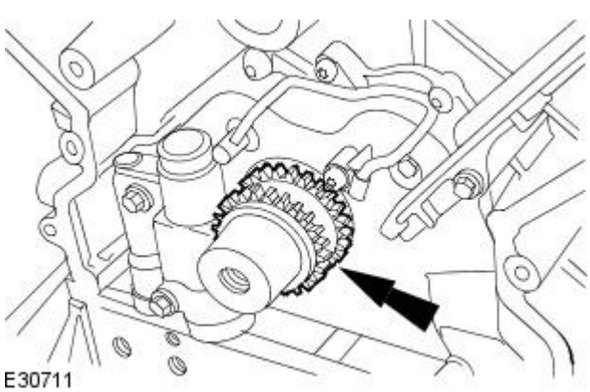
E30711

23. Remove the crankshaft sprocket.

Installation

All vehicles

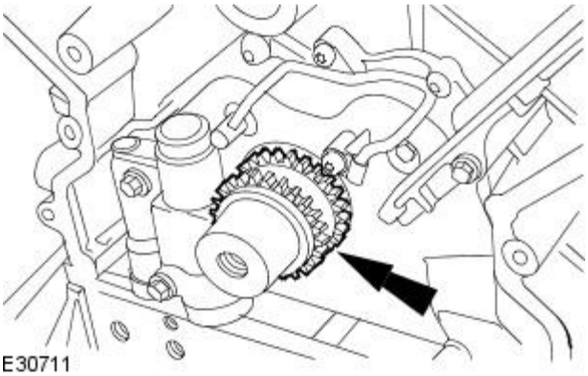
E30711

1. Install the crankshaft sprocket.

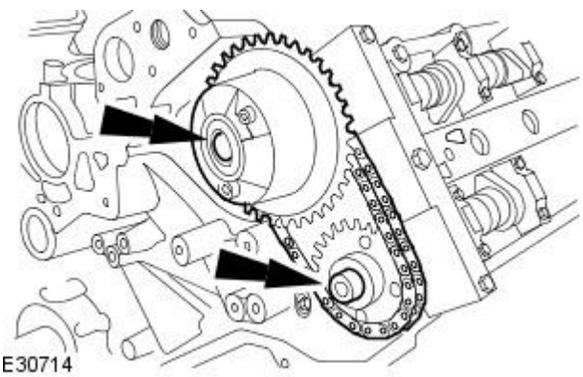
E30714

2. CAUTIONS:

Do not tighten the camshaft sprocket retaining bolts.

Make sure the secondary timing chain and camshaft sprockets are free to rotate.

Install the camshaft sprockets.

- Install the secondary timing chain tensioner and secondary timing chain to the camshaft sprockets.

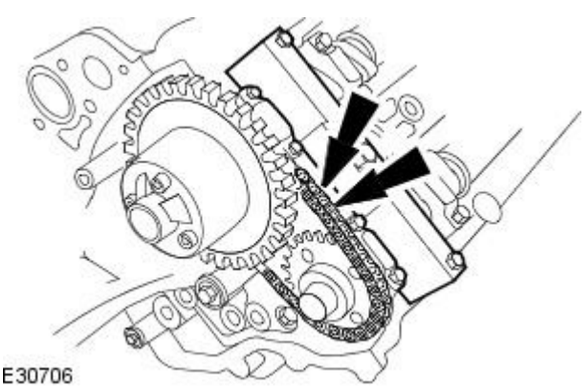
E30706

3. Install the secondary timing chain tensioner retaining bolts.

- Tighten to 12 Nm.

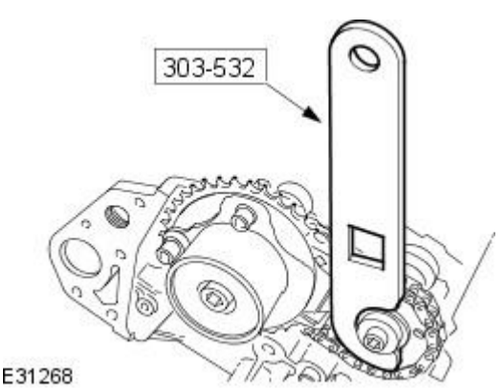

E31268

4. Install the timing chain tensioning tool 303-532 to the exhaust camshaft sprocket.

- Reposition the camshaft sprockets for the most advantageous position for use of the tool.

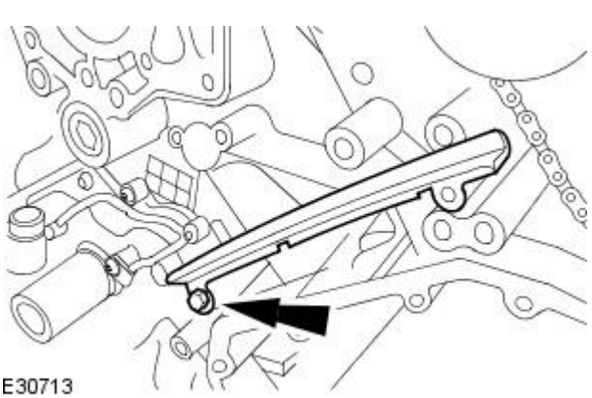
E30713

5. Install the primary timing chain tensioner guide.

- Tighten to 12 Nm.

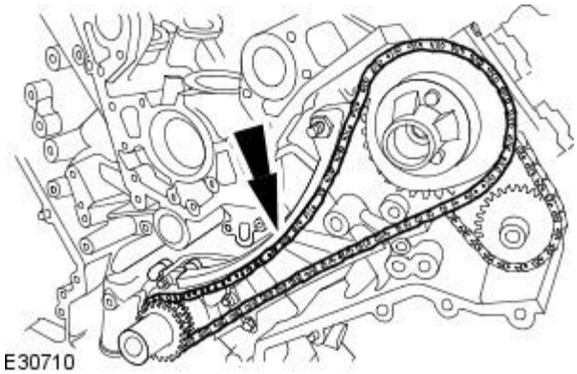

6. CAUTION: Make sure the timing chain slack is on the tensioned side of the timing chain.

Install the primary timing chain.

- Install the primary chain over the crankshaft sprocket and the intake sprocket.

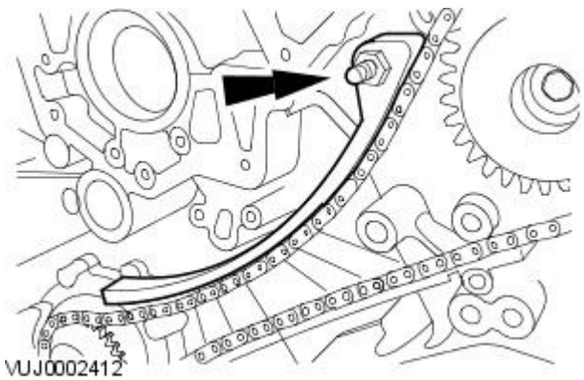

7. Install the primary timing chain tensioner guide.

- Tighten to 12 Nm.

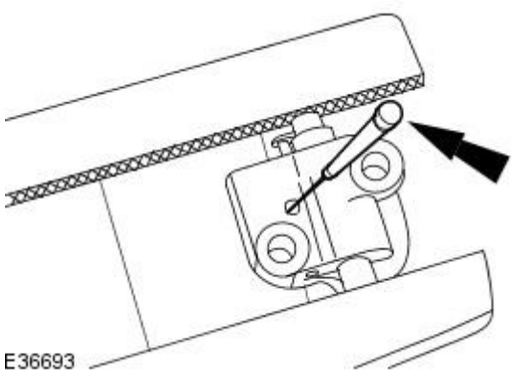

8. CAUTION: During timing chain tensioner compression, do not release the ratchet stem until the timing chain tensioner piston is fully bottomed in its bore or damage to the ratchet stem will result.

• NOTE: The retaining tool must remain in the timing chain tensioner until the timing chain tensioner is installed to the engine with the piston bottomed in the bore.

Using a suitable tool, hold the left-hand timing chain tensioner ratchet lock mechanism away from the ratchet stem.

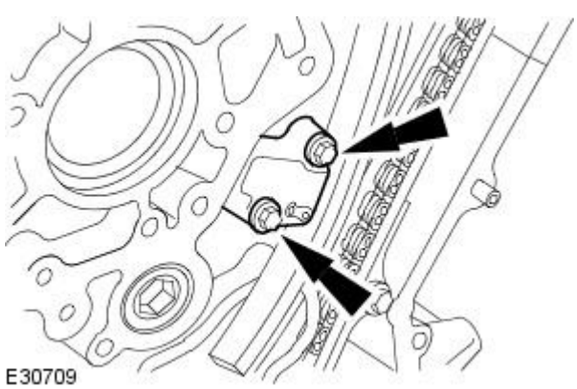

9. Install the primary timing chain tensioner assembly.

- Tighten to 12 Nm.

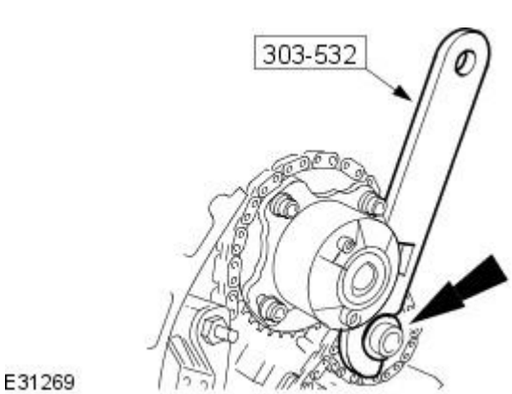

10. CAUTIONS:

While applying the opposing force to sprocket and chain, tighten the sprocket bolt.

Make sure that a new bolt is installed.

Using the special tool apply force to the tool in an anti-clockwise direction to tension the primary timing chain on its drive side.

- Tighten to 20 Nm +90°.

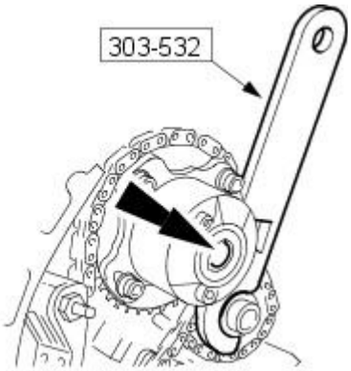

E31270

11. CAUTIONS:

While applying the opposing force to sprocket and chain, tighten the sprocket bolt.

Make sure that a new bolt is installed.

Using the special tool apply force to the tool in an anti-clockwise direction.

- Tighten to 20 Nm +90°.

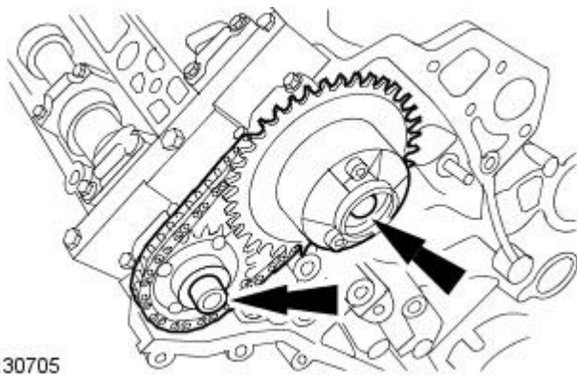

E30705

12. CAUTIONS:

Do not tighten the camshaft sprocket retaining bolts.

Make sure the secondary timing chain and camshaft sprockets are free to rotate.

Install the camshaft sprockets.

- Install the secondary timing chain tensioner and secondary timing chain to the camshaft sprockets.

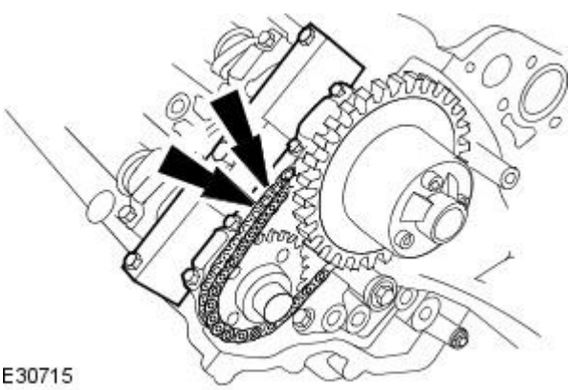

E30715

13. Install the secondary timing chain tensioner retaining bolts.

- Tighten to 12 Nm.

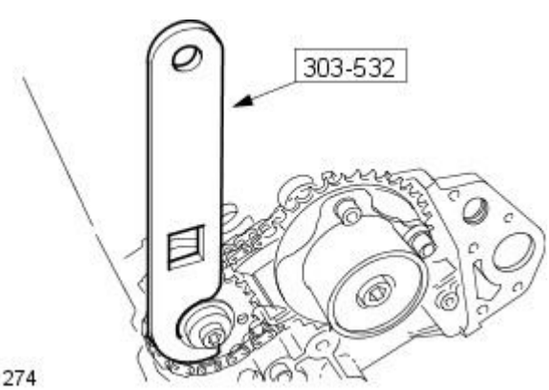

E31274

14. Install the timing chain tensioning tool 303-532 to the exhaust camshaft sprocket.

- Reposition the camshaft sprockets for the most advantageous position for use of the tool.

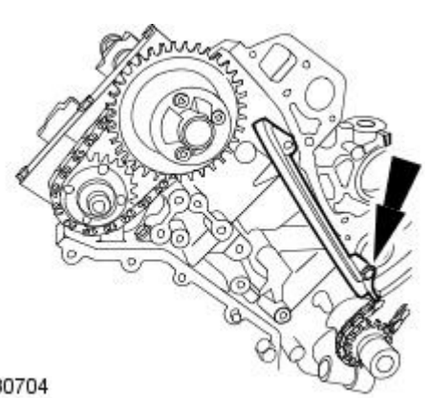

E30704

15. Install the primary timing chain guide.

- Tighten to 12 Nm.

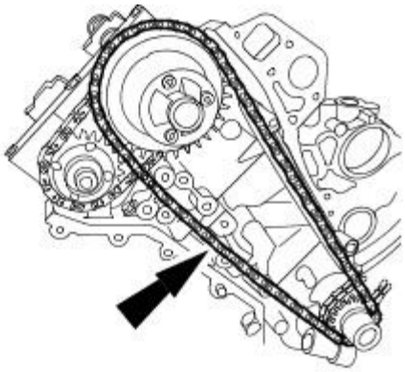

E30703

16. CAUTION: Make sure the timing chain slack is on the tensioned side of the timing chain.

Install the primary timing chain.

- Install the primary chain over the crankshaft sprocket and the intake sprocket.

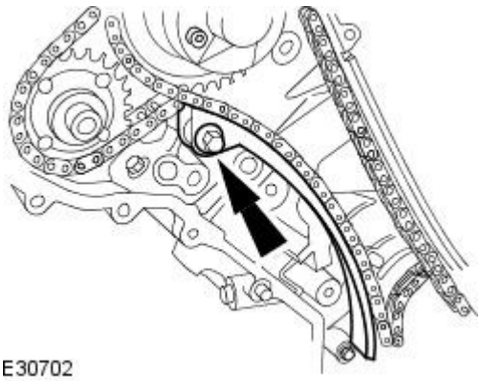

E30702

17. Install the primary timing chain tensioner guide.

- Tighten to 12 Nm.

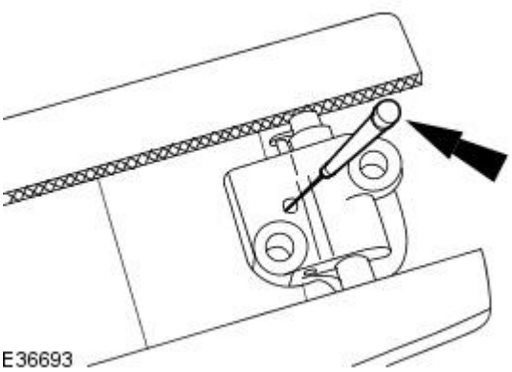

E36693

18. CAUTION: During timing chain tensioner compression, do not release the ratchet stem until the timing chain tensioner piston is fully bottomed in its bore or damage to the ratchet stem will result.

• NOTE: The retaining tool must remain in the timing chain tensioner until the timing chain tensioner is installed to the engine with the piston bottomed in the bore.

Using a suitable tool, hold the right-hand timing chain tensioner ratchet lock mechanism away from the ratchet stem.

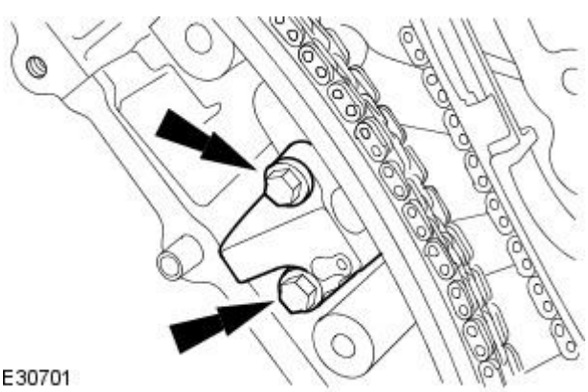

E30701

19. Install the primary timing chain tensioner assembly.

- Tighten to 12 Nm.

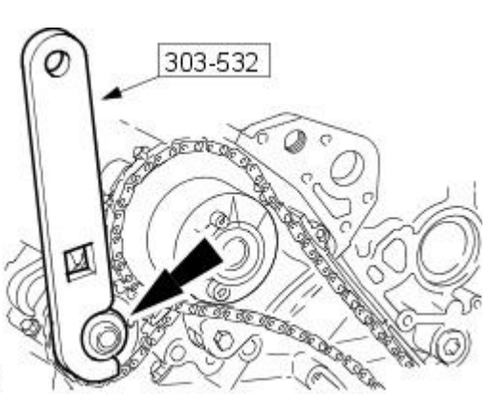

E31271

20. CAUTIONS:

While applying the opposing force to sprocket and chain, tighten the sprocket bolt.

Make sure that a new bolt is installed.

Using the special tool apply force to the tool in an anti-clockwise direction to tension the primary timing chain on its drive side.

- Tighten to 20 Nm +90°.

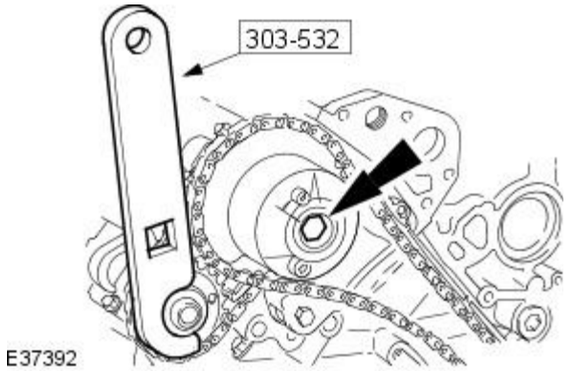

21. CAUTIONS:

While applying the opposing force to sprocket and chain, tighten the sprocket bolt.

Make sure that a new bolt is installed.

Using the special tool apply force to the tool in an anti-clockwise direction.

- Tighten to 20 Nm +90°.

22. Release the tension in the left-hand timing chain tensioner.

- Remove the retaining tool.

23. Release the tension in the right-hand timing chain tensioner.

- Remove the retaining tool.

24. Remove the special tool to the Right-hand cylinder head.

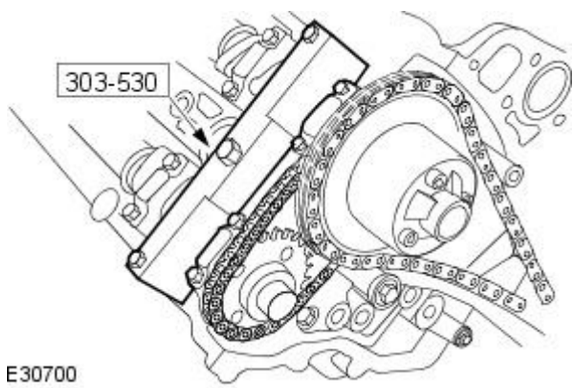

25. Remove the special tool to the left-hand cylinder head.

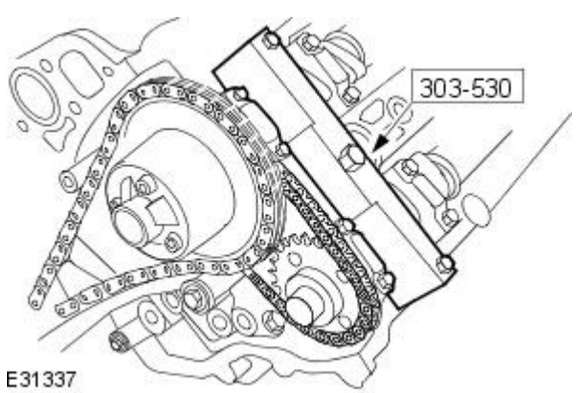

Vehicles without supercharger

26. Install the left-hand variable camshaft timing oil control unit housing.

- Install new O-ring seals.
- Tighten to 22 Nm.

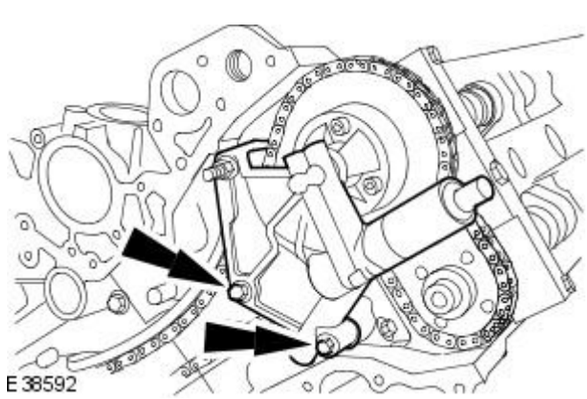

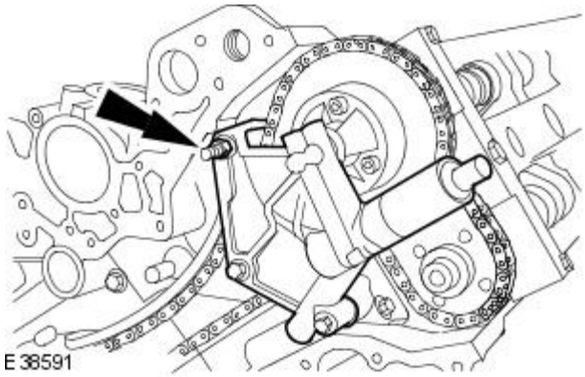

27. Tighten to 12 Nm.

All vehicles

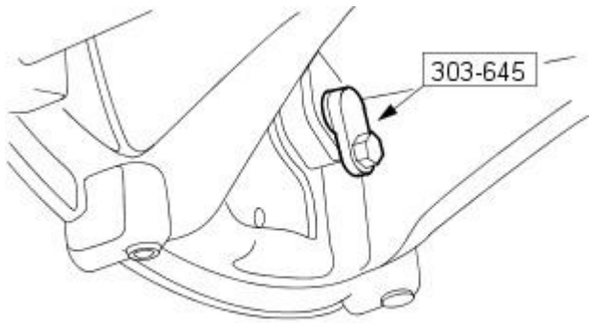

28. Remove the special tool.

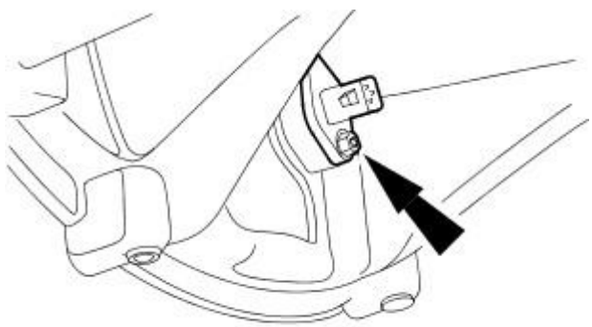

29. Install the crankshaft position sensor.

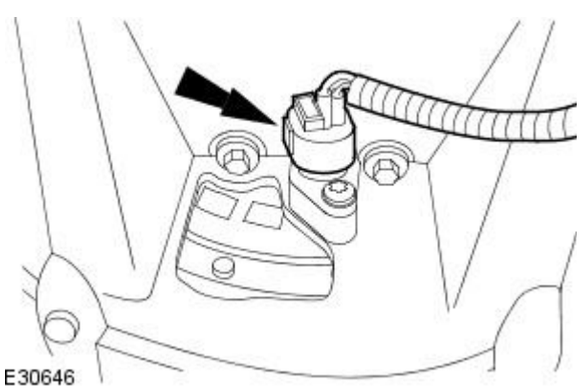

30. Connect the crankshaft position sensor electrical connector.

31. Install the spark plugs.

32. Install the engine front cover. For additional information, refer to: Engine Front Cover (303-01 Engine, In-vehicle Repair).

Engine - Valve Cover LH

In-vehicle Repair

Removal

Vehicles without supercharger

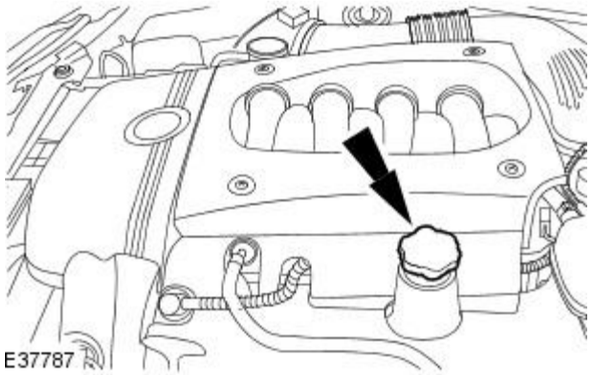

1. Remove the oil filler cap.

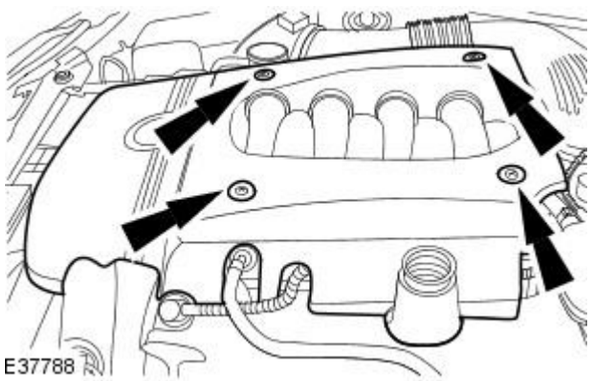

2. Remove the engine cover.

Vehicles with supercharger

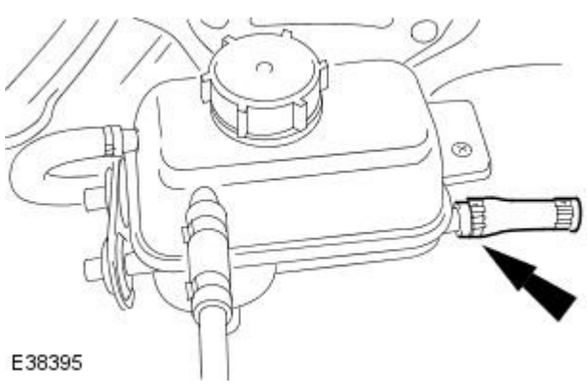

3. Disconnect the hose.

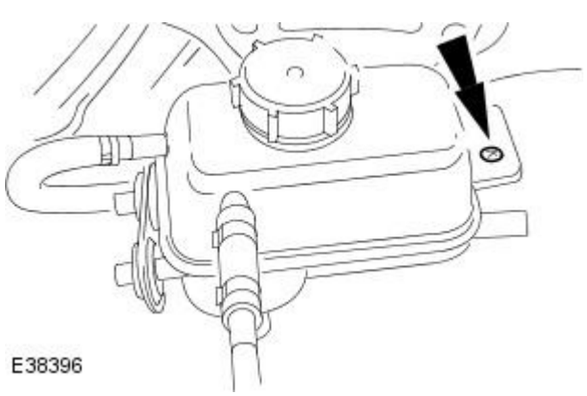

4. Remove the retaining bolt.

Vehicles without supercharger

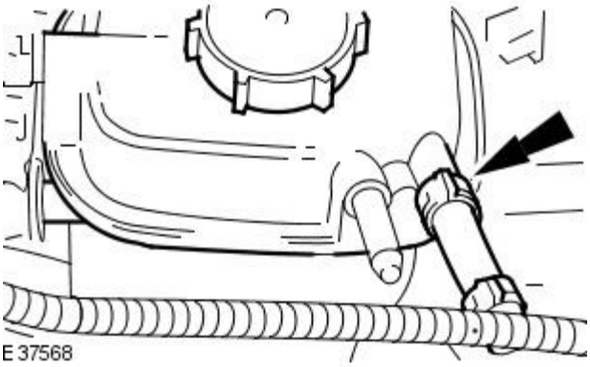

5. Disconnect the hose.

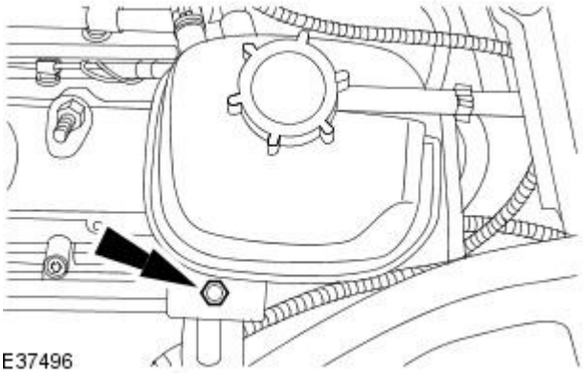

6. Remove the retaining bolt.

All vehicles

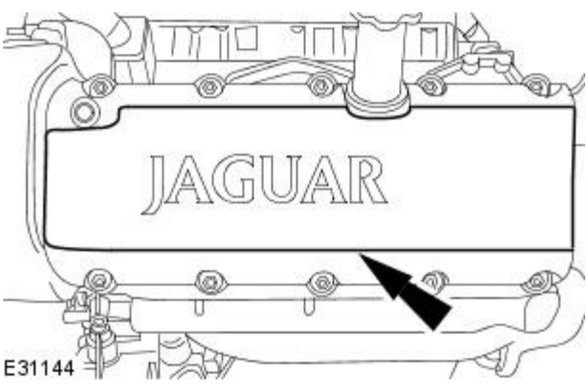

7. Remove the ignition coil-on-plug cover.

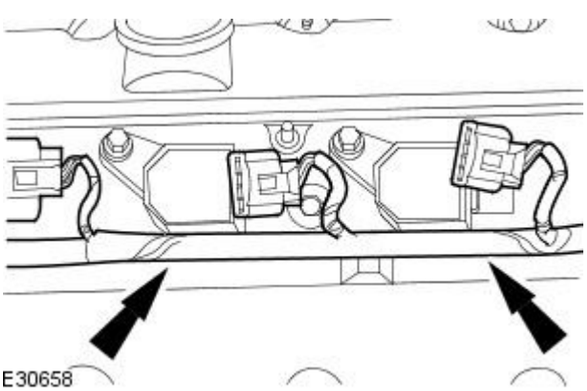

8. Detach the wiring harness.

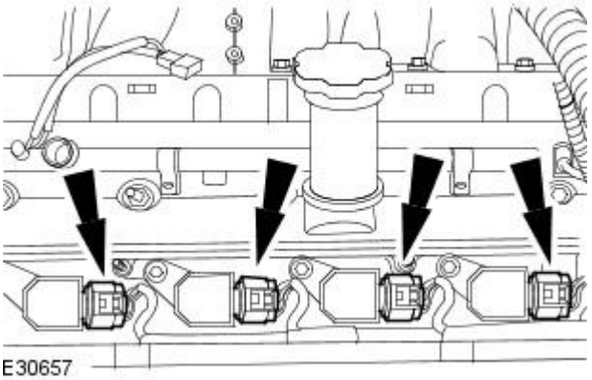

9. Disconnect the ignition coil-on-plug electrical connectors.

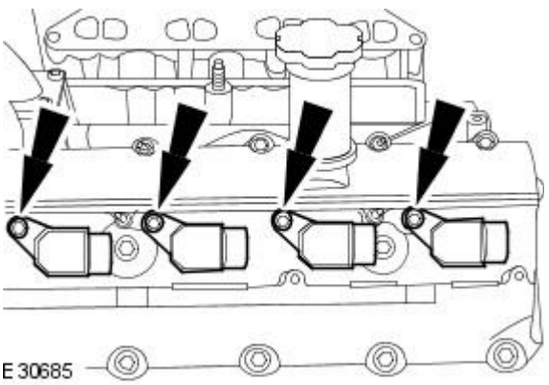

10. Remove the ignition coil on-plugs.

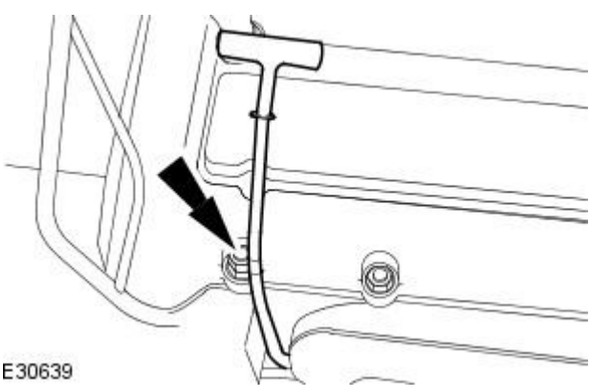

11. Remove the oil level indicator and tube.

- Remove and discard the O-ring seal.

12. Detach the fuel line.
For additional information, refer to Section 310-00 Fuel System - General Information.

Vehicles without supercharger

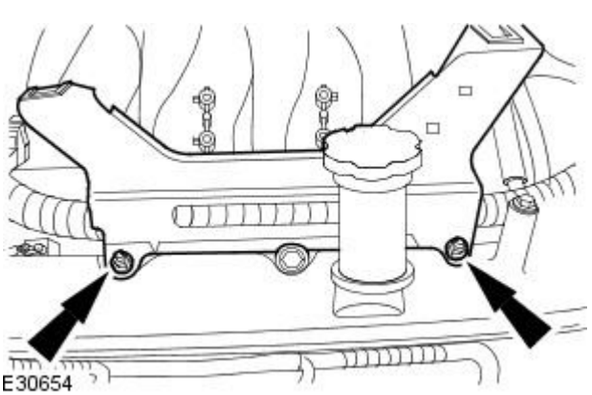

13. Remove the left-hand engine cover bracket.

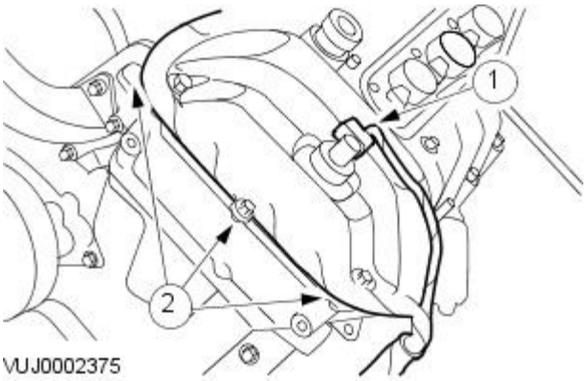

14. Detach the engine wiring harness.

1. Disconnect the variable camshaft timing oil control solenoid electrical connector.
2. Detach the engine wiring harness.

Vehicles with supercharger

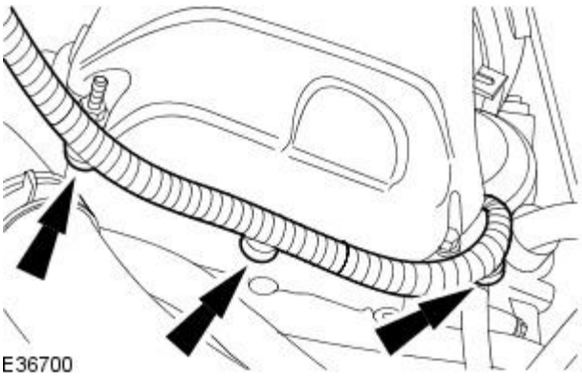

15. Detach the engine wiring harness.

All vehicles

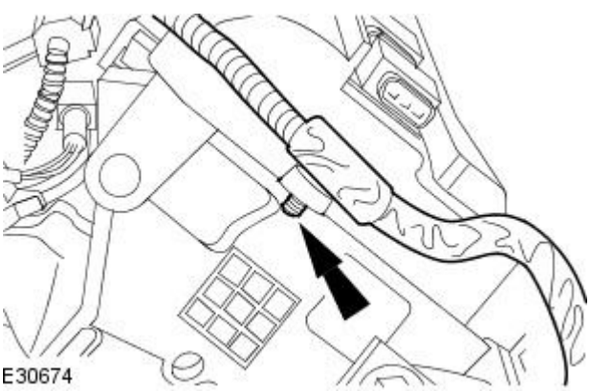

16. NOTE: Right hand shown, left hand similar.

Detach the engine wiring harness.

17. Remove the valve cover assembly.

- Remove and discard valve cover gaskets.

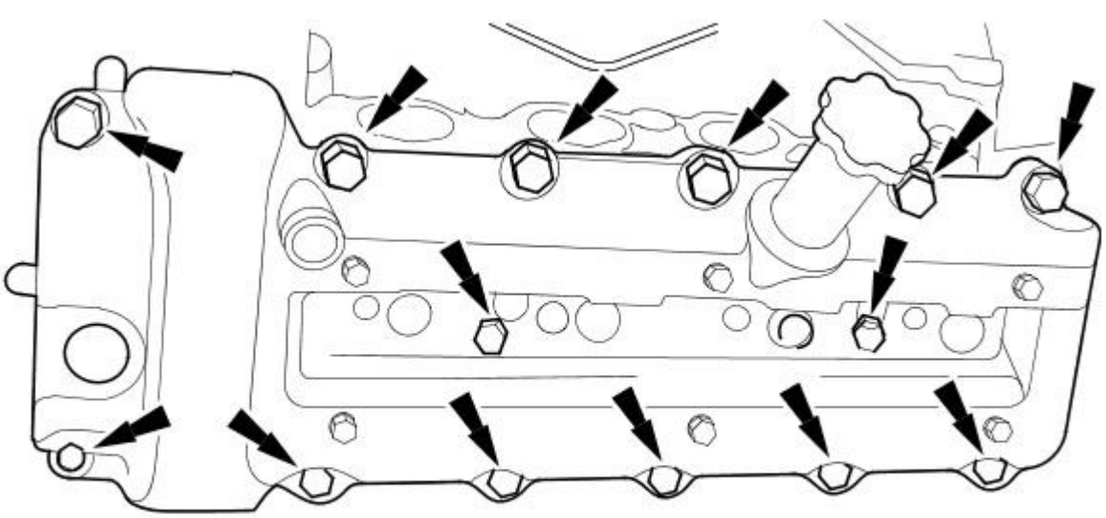

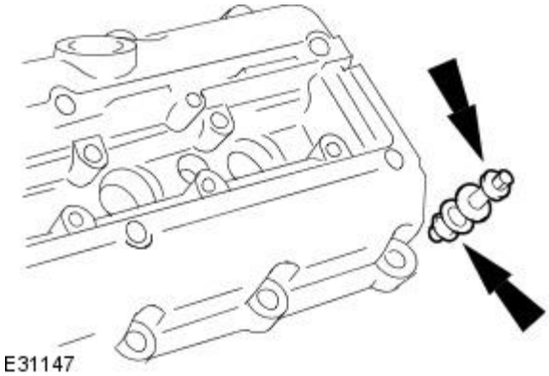

18. NOTE: On removal of the valve cover retaining bolts note their positions in the valve cover.

Remove the valve cover retaining bolts.

- Remove and discard the valve cover retaining bolt O-ring seals.

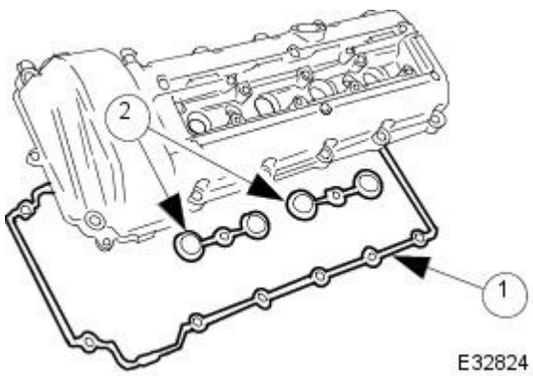

19. Remove the seals from the valve cover.

1. Remove and discard the outer seal.
2. Remove and discard the two seals from around the spark plug apertures.
3. Remove the seal for the variable camshaft timing oil control solenoid.

Installation

All vehicles

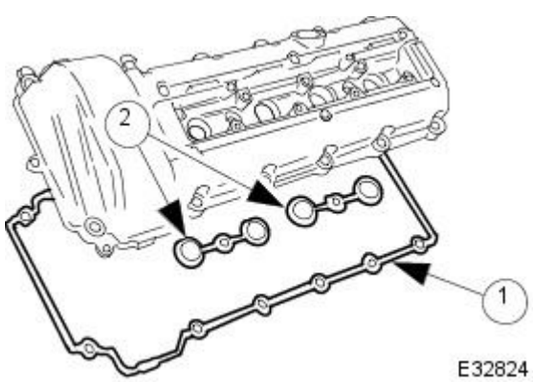

1. Install the new main seals to the valve cover.

1. Install the new outer seal.
2. Install the two new spark plug aperture seals.
3. Install the seal to the variable camshaft timing oil control solenoid.

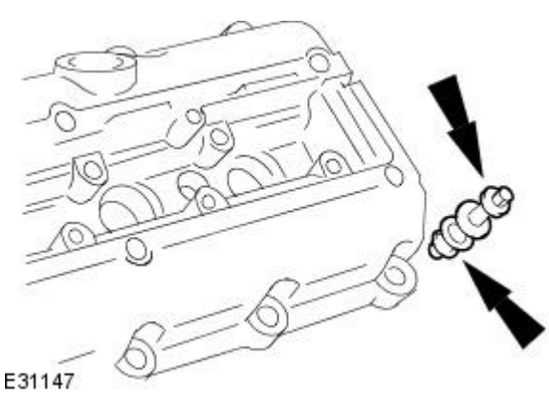

2. NOTE: Install the valve cover retaining bolts to their positions previously noted.

Install the valve cover retaining bolts.

- Install new valve cover retaining bolt O-ring seals.

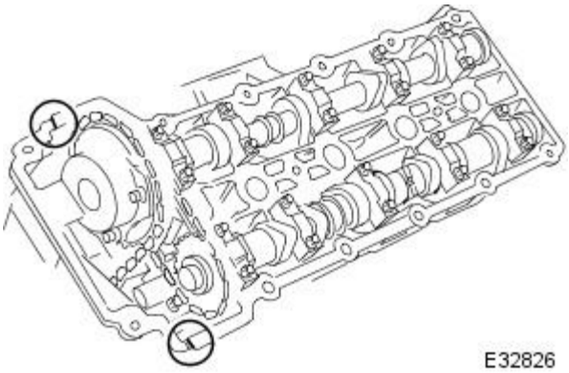

3. Apply bead of silicone gasket sealant or equivalent meeting Jaguar specification on the two places where the cylinder head and front cover join.

- The application of sealant must be 3mm diameter by 12mm long. Install the valve cover immediately after applying the sealant.
- The cover should be fitted directly to the head without smearing the sealant or the seals.

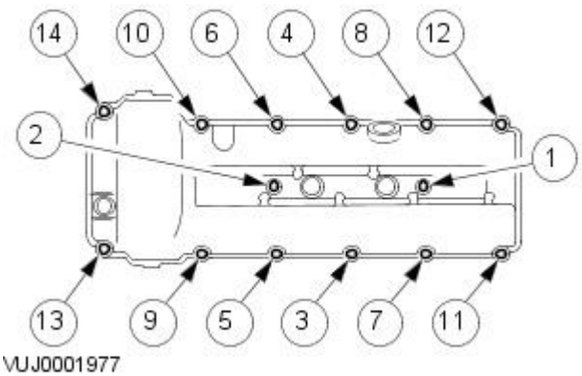

4. Install the valve cover.

- Install new valve cover gaskets.
- Complete the tightening sequence.
- Tighten to 12 Nm.

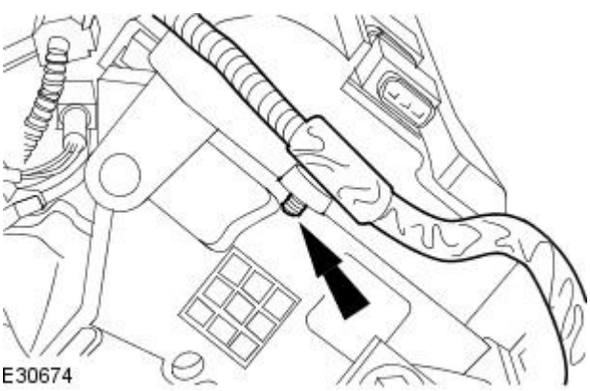

5. NOTE: Right hand shown, left hand similar.

Detach the engine wiring harness.

Vehicles with supercharger

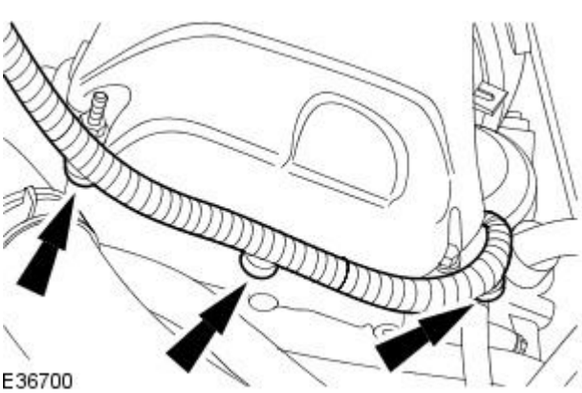

6. Detach the engine wiring harness.

Vehicles without supercharger

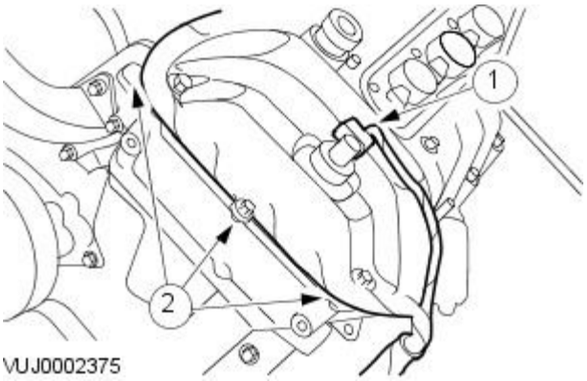

7. Attach the engine wiring harness.

1. Connect the variable camshaft timing oil control solenoid electrical connector.
2. Attach the engine wiring harness.

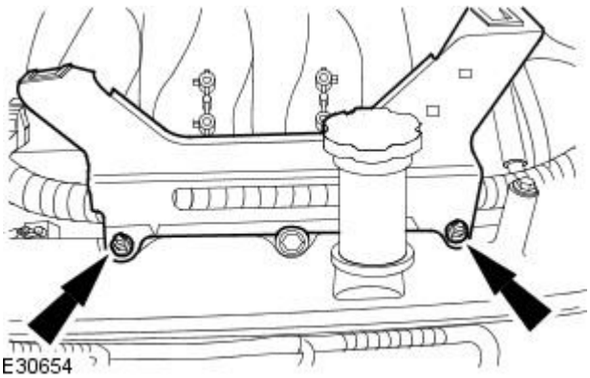

8. Install the left-hand engine cover bracket.

- Tighten to 6 Nm.

All vehicles

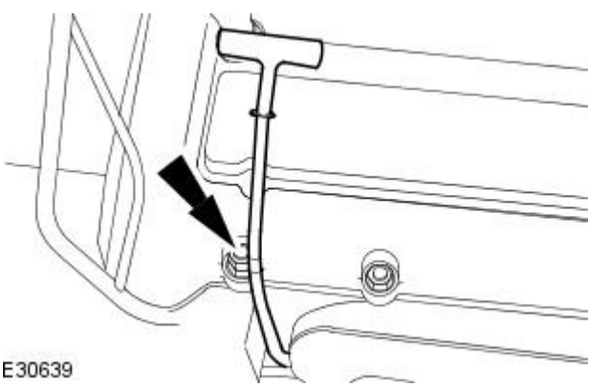

9. Install the oil level indicator and tube.

- Install a new O-ring seal.
- Tighten to 6 Nm.

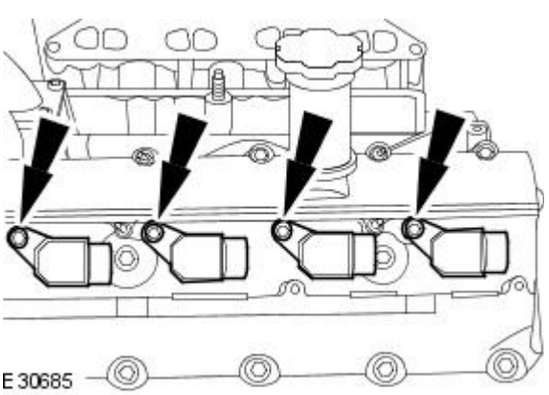

10. Install the ignition coil on-plugs.

- Tighten to 5 Nm.

11. Disconnect the ignition coil-on-plug electrical connectors.

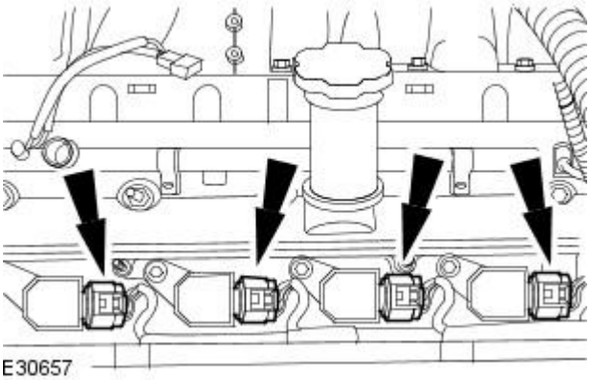

12. Detach the wiring harness.

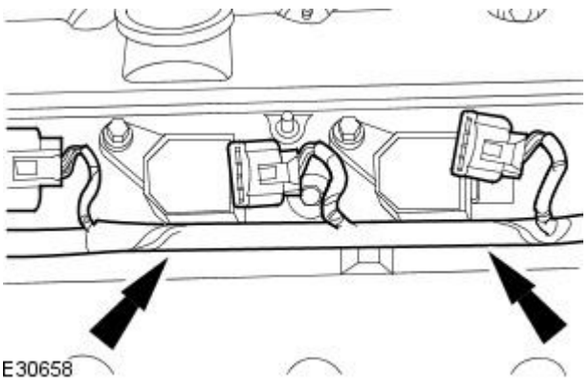

13. Install the ignition coil-on-plug cover.

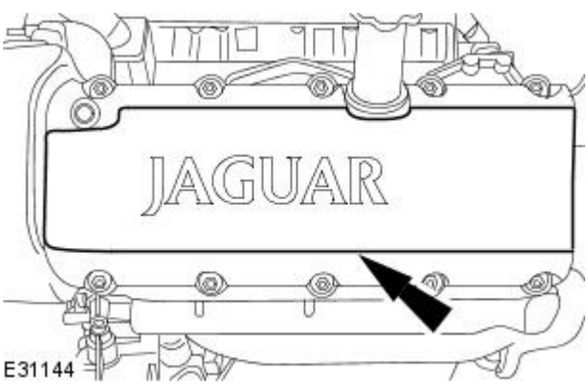

Vehicles without supercharger

14. Connect the hose.

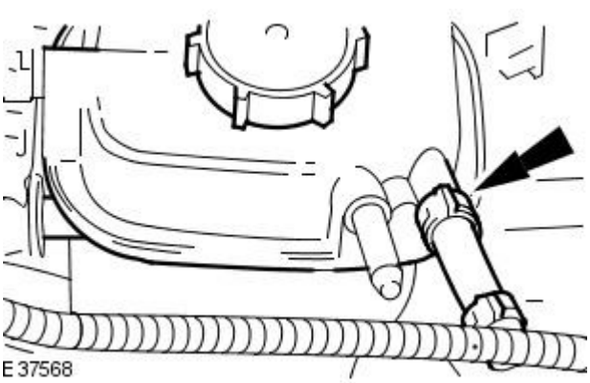

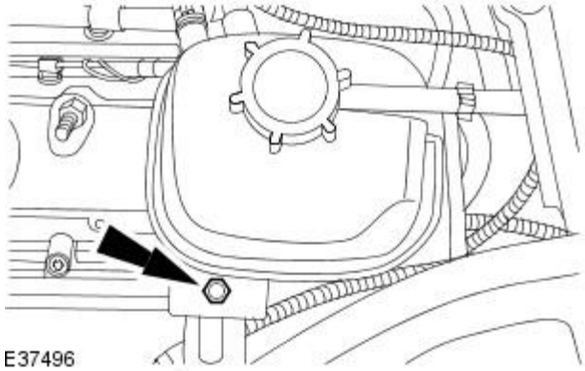

15. Install the retaining bolt.

Vehicles with supercharger

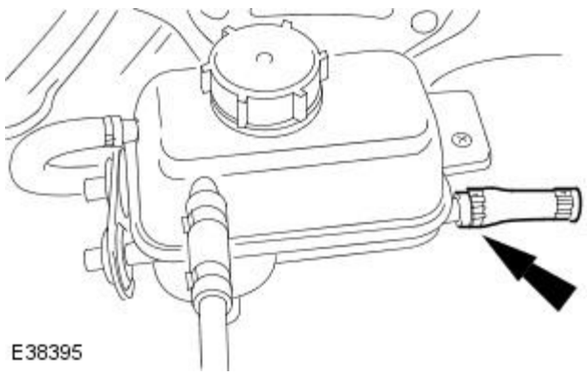

16. Connect the hose.

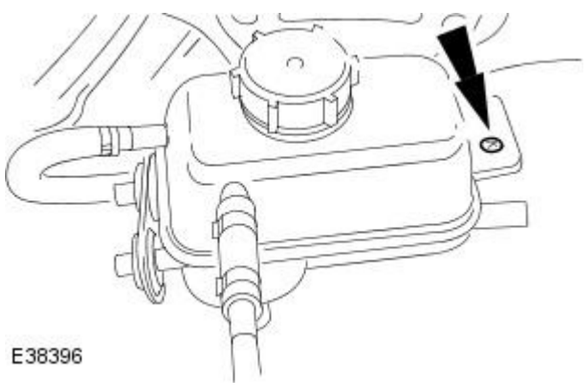

17. Install the retaining bolt.

Vehicles without supercharger

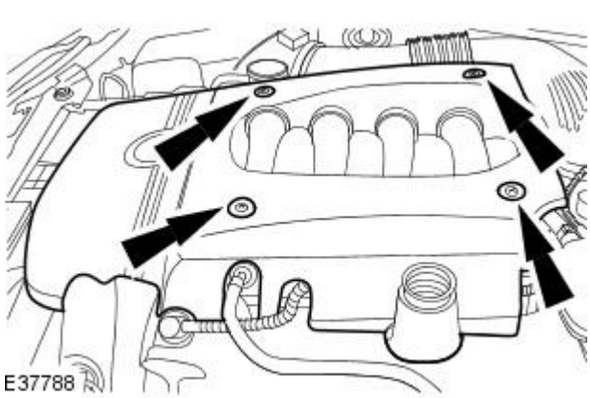

18. Install the engine cover.

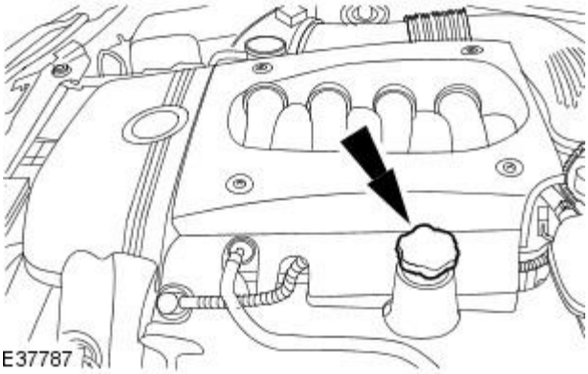

19. Install the oil filler cap.

Engine - Valve Cover RH

In-vehicle Repair

Removal

Vehicles without supercharger

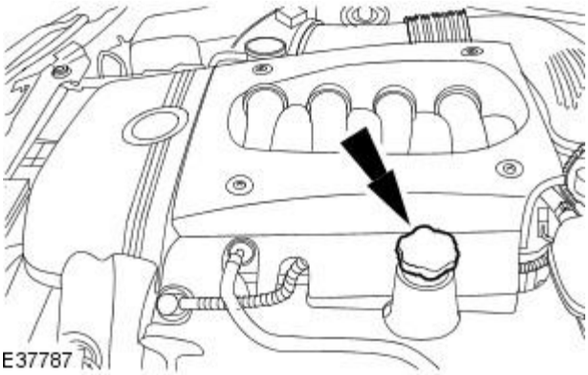

1. Remove the oil filler cap.

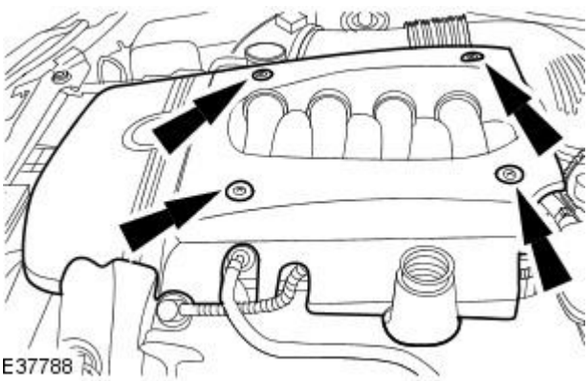

2. Remove the engine cover.

All vehicles

3. Remove the air cleaner.
   For additional information, refer to Section 303-12 Intake Air Distribution and Filtering.
4. Remove the ignition coil-on-plug cover.

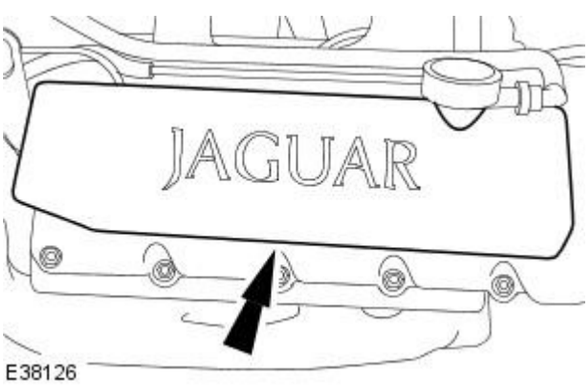

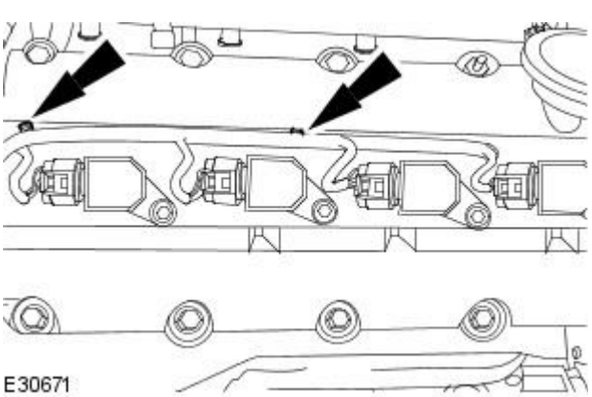

5. Detach the wiring harness.

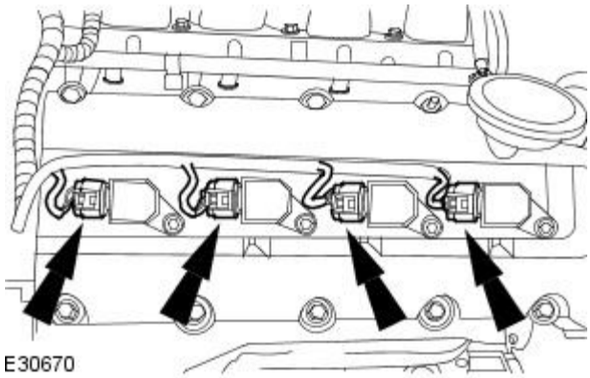

6. Disconnect the electrical connectors.

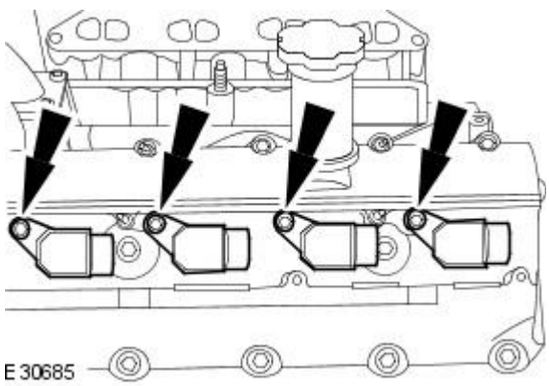

7. Remove the ignition coil-on-plugs.

- Remove the retaining bolts.

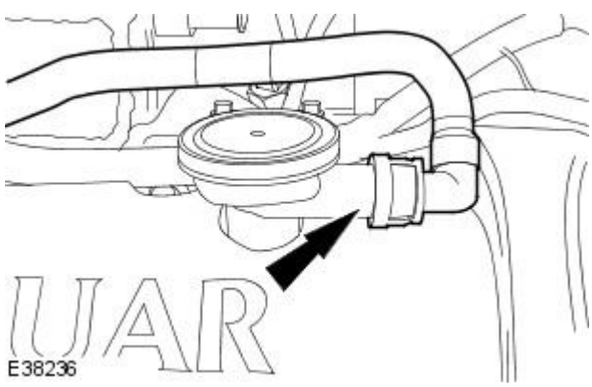

8. Disconnect the hose.

Vehicles without supercharger

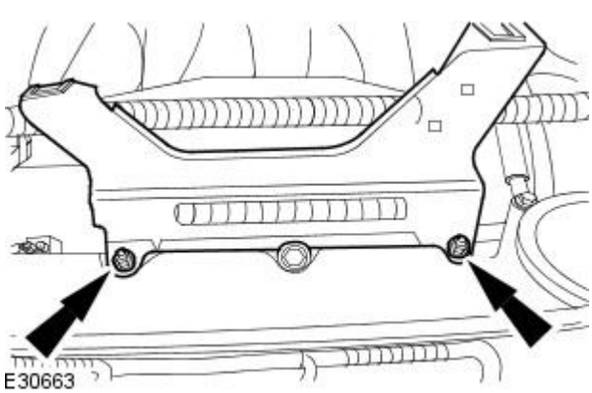

9. Remove the right-hand engine cover bracket.

- Detach the knock sensor (KS) wiring harness.

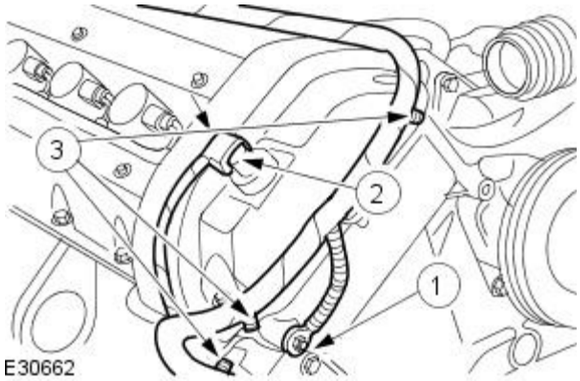

10. Detach the engine wiring harness.

1. Detach the ground harness
2. Disconnect the variable camshaft timing (VCT) oil control solenoid electrical connector.
3. Detach the engine wiring harness.

Vehicles with supercharger

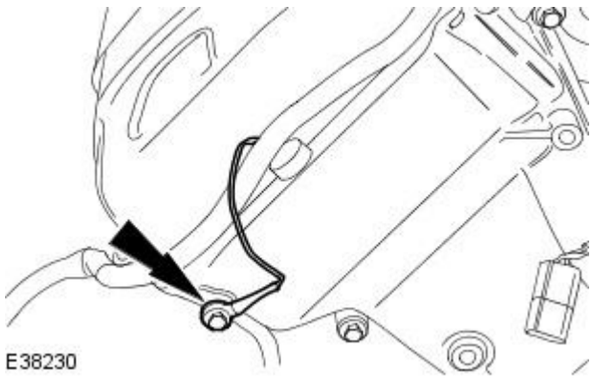

11. Remove the retaining bolt.

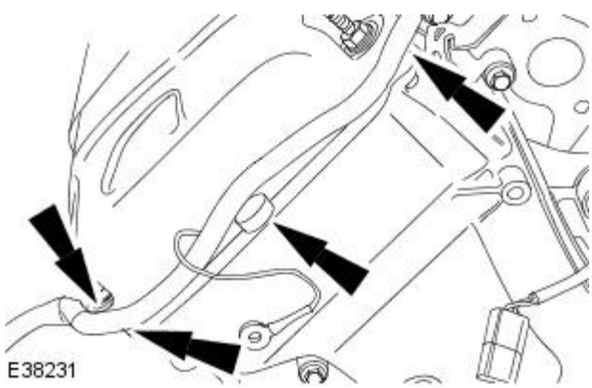

12. Detach the engine wiring harness.

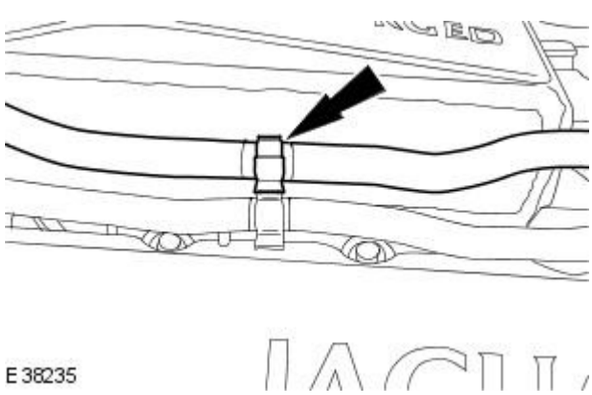

13. Detach the hose.

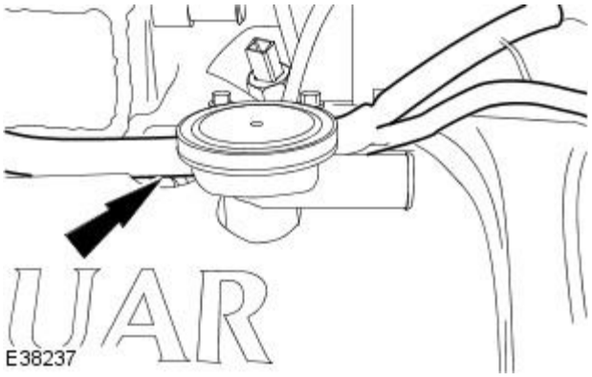

14. Detach the engine wiring harness.

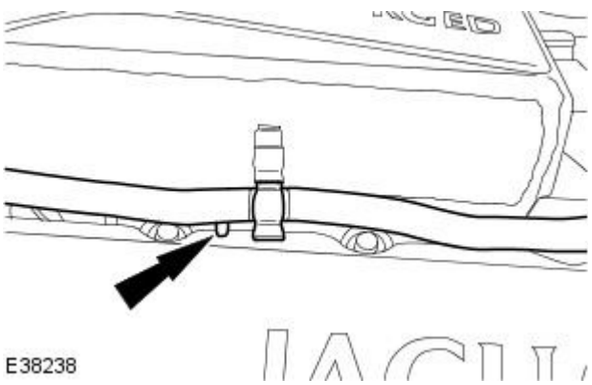

15. Detach the engine wiring harness.

All vehicles

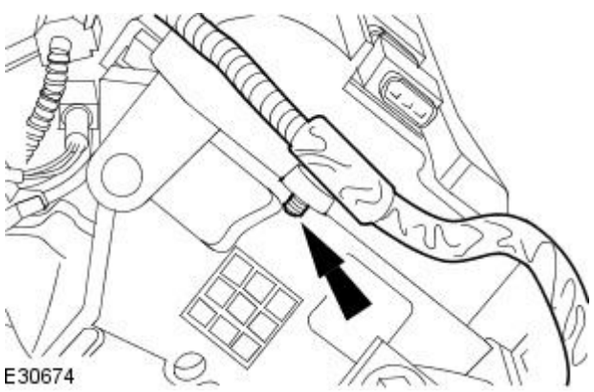

16. Detach the engine wiring harness.

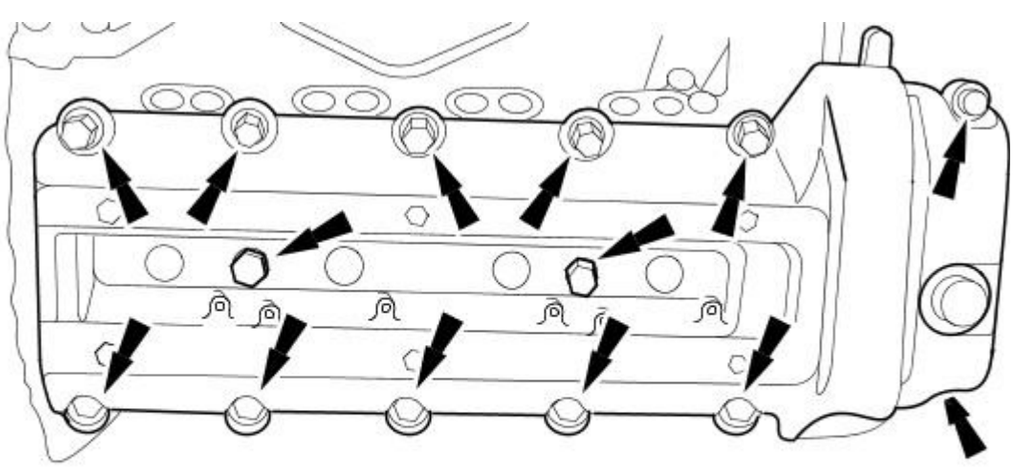

17. Remove the valve cover assembly.

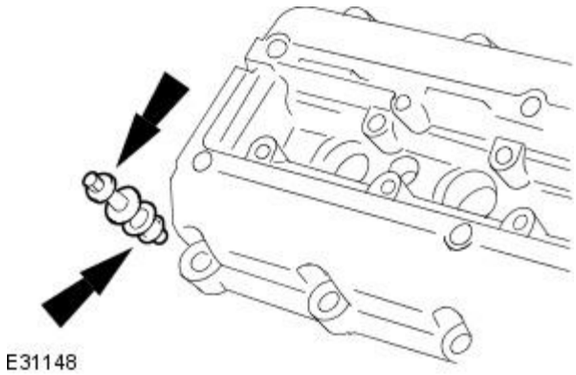

18. NOTE: On removal of the valve cover retaining bolts note their positions in the valve cover.

Remove the valve cover retaining bolts.

- Remove and discard the valve cover retaining bolt O-ring seals.

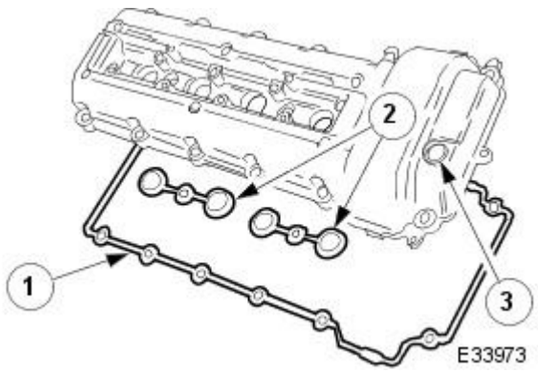

19. Remove the seals from the valve cover.

1. Remove and discard the outer seal.
2. Remove and discard the two seals from around the spark plug apertures.
3. Remove the seal for the variable camshaft timing oil control solenoid.

Installation

All vehicles

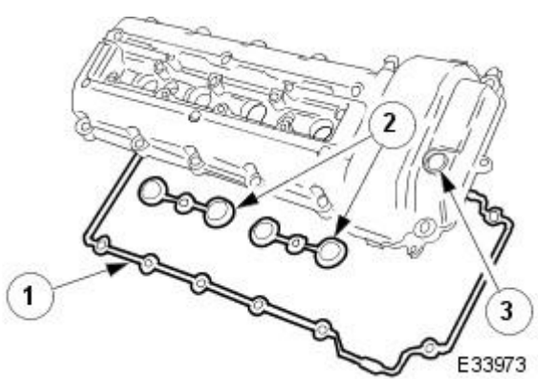

1. Install the new main seals to the valve cover.

1. Install the new outer seal.
2. Install the two new spark plug aperture seals.
3. Install the seal to the variable camshaft timing oil control solenoid.

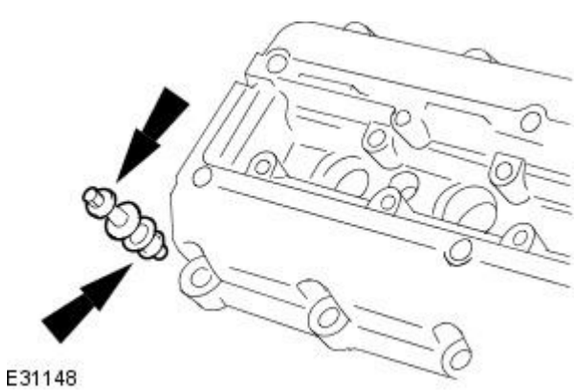

2. NOTE: Install the valve cover retaining bolts to their positions previously noted.

Install the valve cover retaining bolts.

- Install new valve cover retaining bolt O-ring seals.

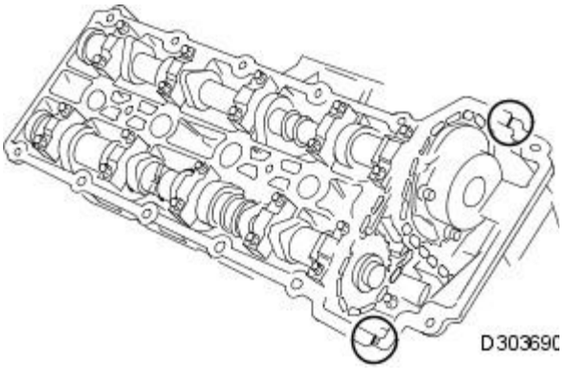

3. Apply bead of silicone gasket sealant or equivalent meeting Jaguar specification on the two places where the cylinder head and front cover join.

- The application of sealant must be 3mm diameter by 12mm long. Install the valve cover immediately after applying the sealant.
- The cover should be fitted directly to the head without smearing the sealant or the seals.

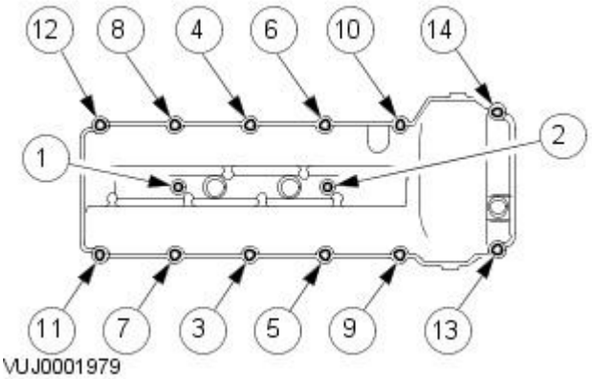

4. Install the valve cover.

- Tighten to 12 Nm.

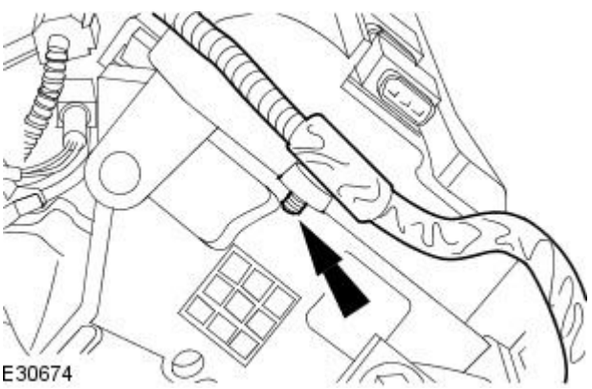

5. Attach the engine wiring harness.

Vehicles with supercharger

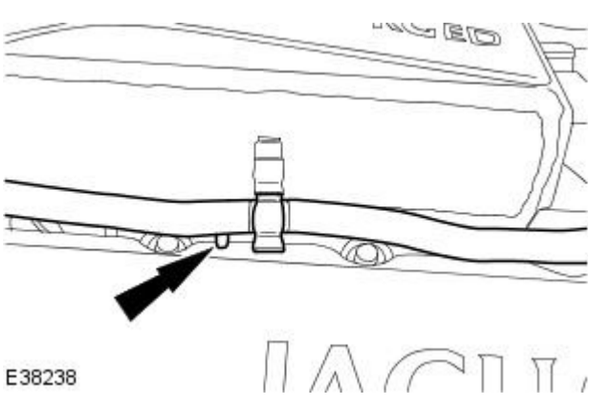

6. Attach the engine wiring harness.

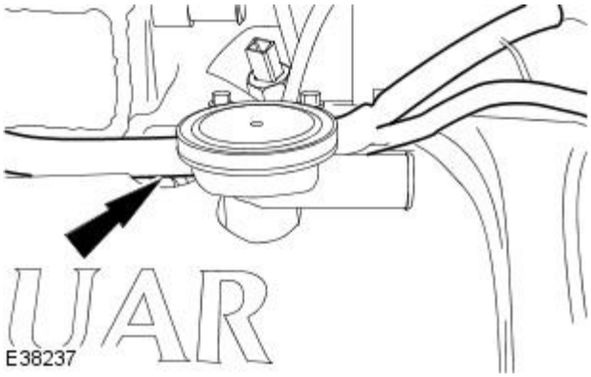

7. Attach the engine wiring harness.

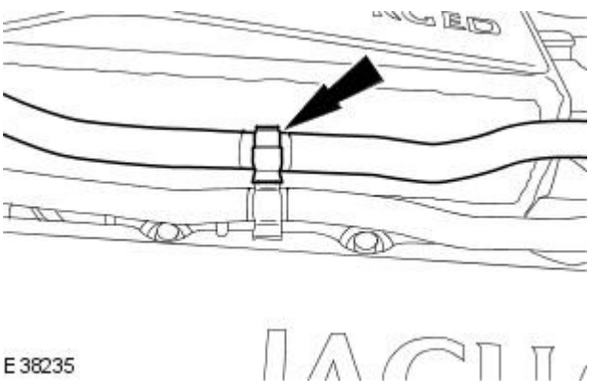

8. Attach the hose.

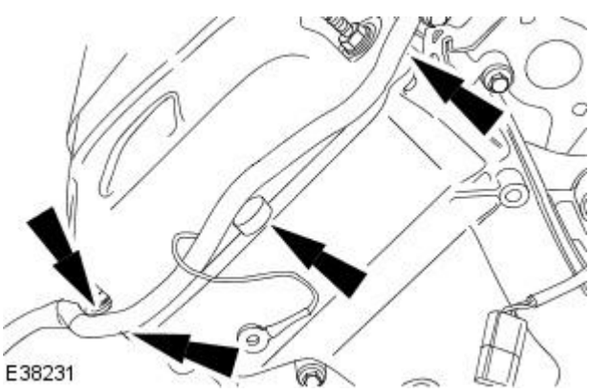

9. Attach the engine wiring harness.

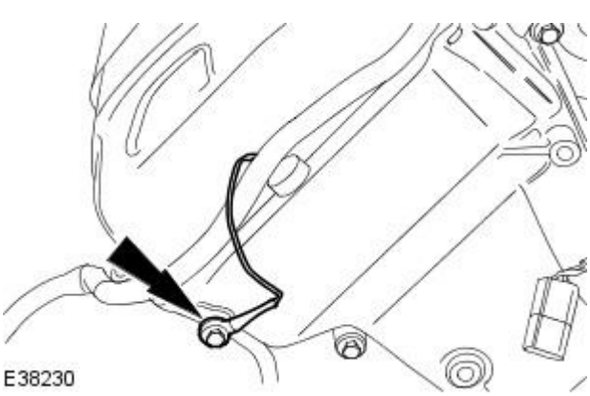

10. Install the retaining bolt.

Vehicles without supercharger

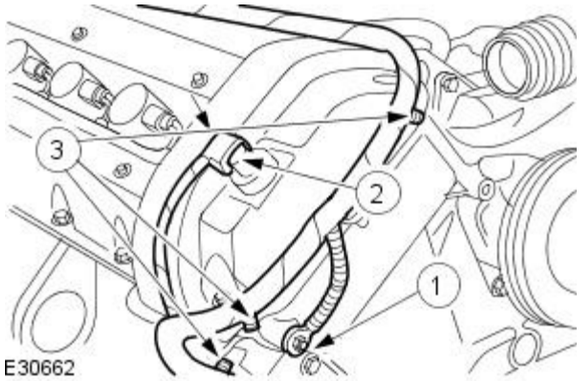

11. Attach the engine wiring harness.

1. Attach the ground harness
2. Connect the variable camshaft timing oil control solenoid electrical connector.
3. Attach the engine wiring harness.

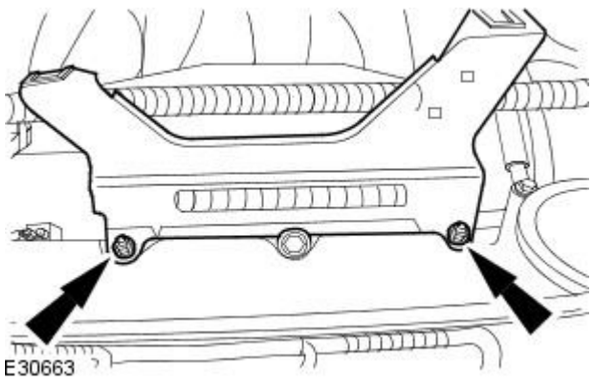

12. Install the right-hand engine cover bracket.

- Detach the knock sensor (KS) wiring harness.
  1. Tighten to 6 Nm.

All vehicles

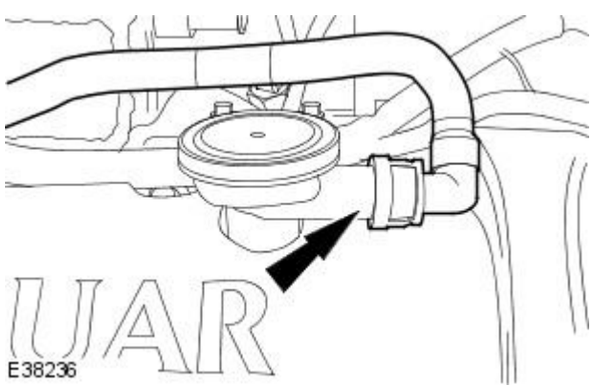

13. Connect the hose.

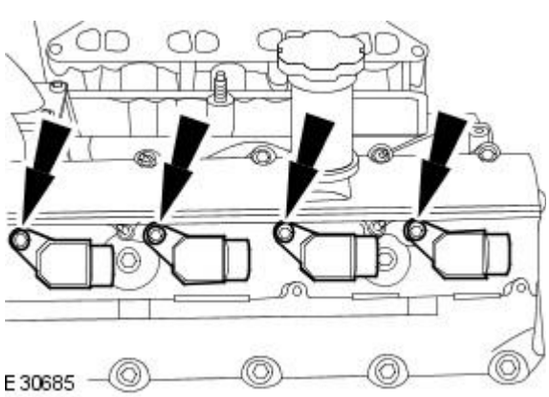

14. Install the ignition coil-on-plugs.

- Tighten to 5 Nm.

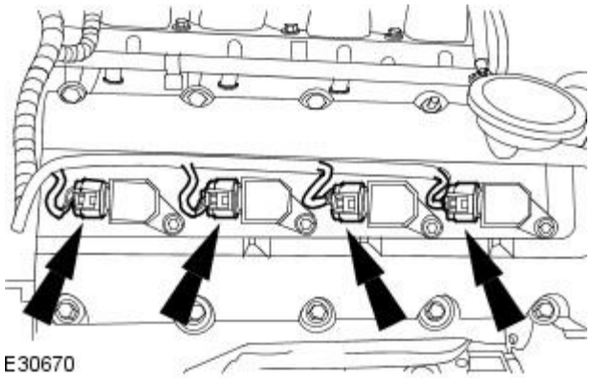

15. Connect the electrical connectors.

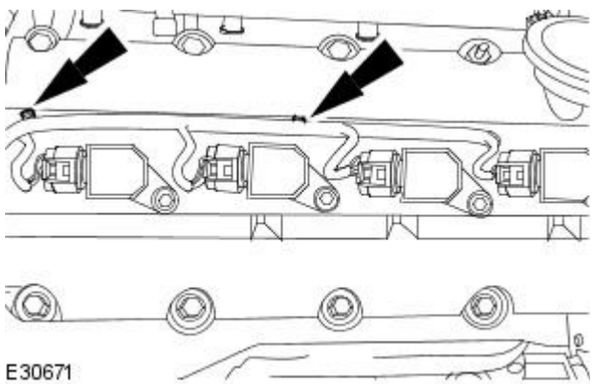

16. Attach the wiring harness.

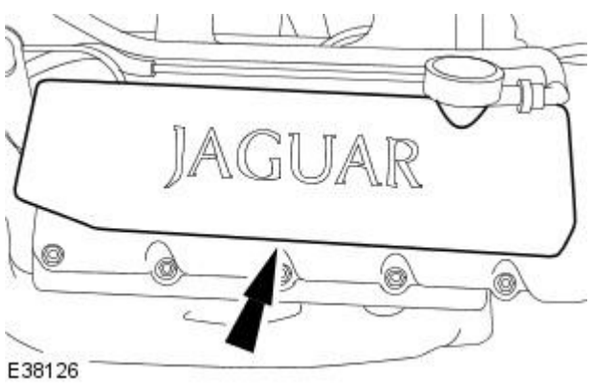

17. Install the ignition coil-on-plug cover.

18. Install the air cleaner.
For additional information, refer to Section 303-12 Intake Air Distribution and Filtering.

Vehicles without supercharger

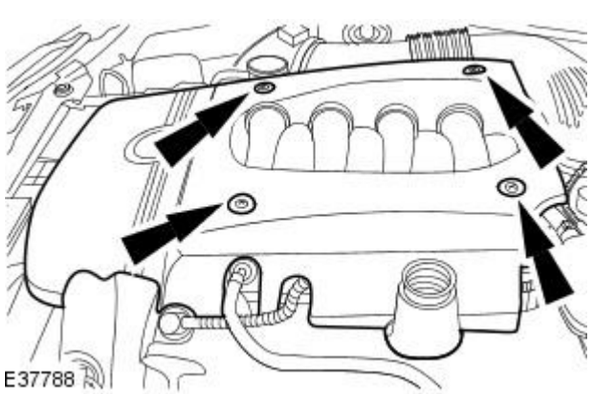

19. Install the engine cover.

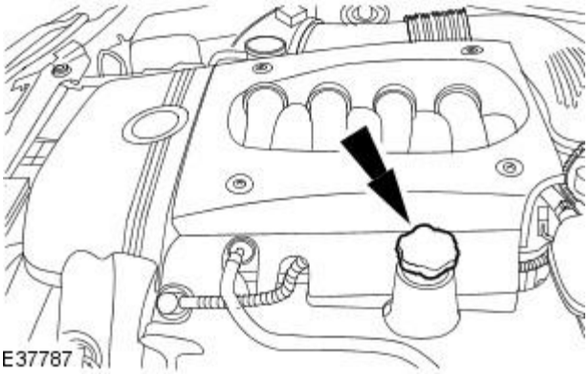

20. Install the oil filler cap.

Engine - Engine

Removal

Special Tool(s)	
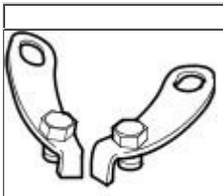 303-536	Engine lifting brackets 303-536
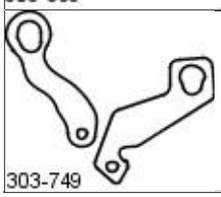 303-749	Engine lifting brackets 303-749

Removal

1. Reclaim the air conditioning refrigerant.
   For additional information, refer to Section 412-00 Climate Control System - General Information.
2. Remove the radiator. For additional information, refer to Section 303-03A Engine Cooling / 303-03B Supercharger Cooling.
3. Remove the catalytic converters.
   For additional information, refer to Section 309-00 Exhaust System.
4. Detach the transmission fluid cooler tubes.

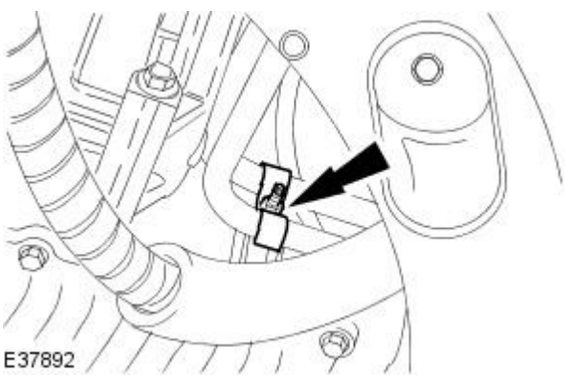

5. Remove the transmission heat shield.

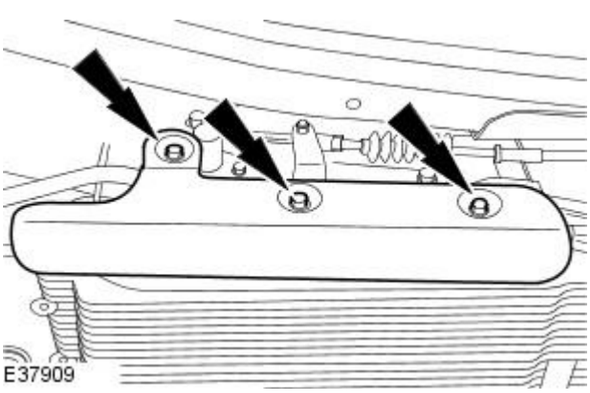

6. Detach the transmission fluid cooler tubes from the automatic transmission.
   1. Remove the retaining bolt.
   2. Remove the retaining plate.

   6. CAUTION: Make sure the transmission fluid cooler tubes are not removed from the automatic transmission by using a pry bar. Failure to follow this instruction may result in damage to the vehicle.

   3. Detach the transmission fluid cooler tubes from the automatic transmission.

   - Allow the transmission fluid to drain into a suitable container.

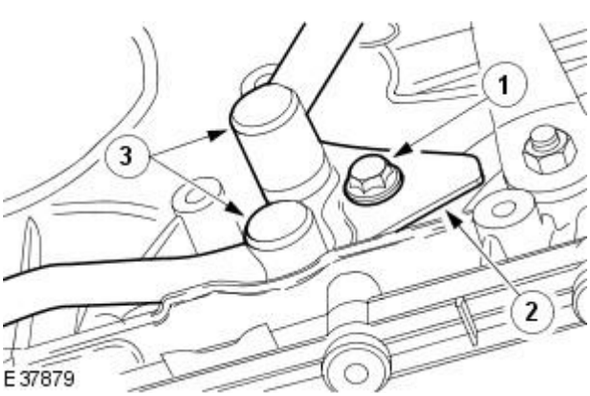

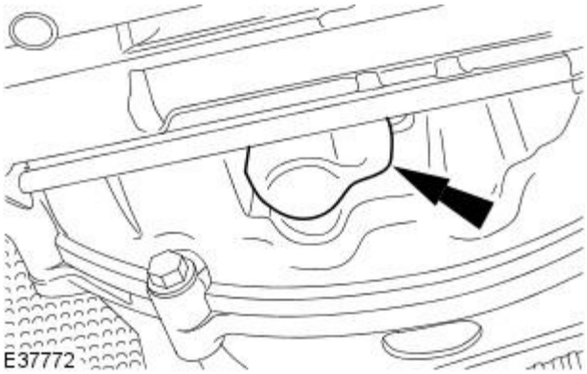

7. Remove the rubber access cover.

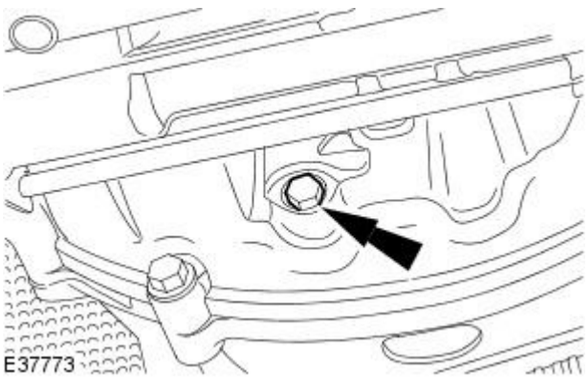

8. CAUTION: Reposition the torque converter rearwards.

Remove the retaining bolts.

- Rotate the torque converter to gain access to the remaining bolts.

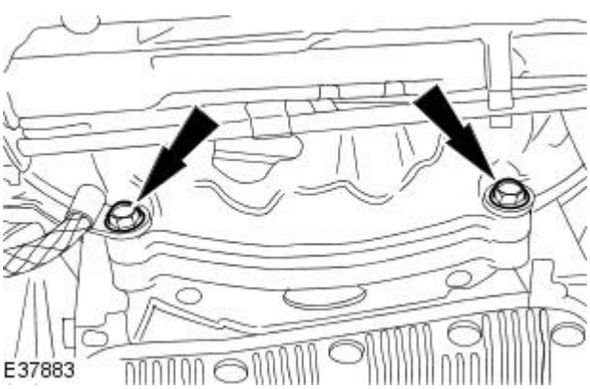

9. Remove the retaining bolts.

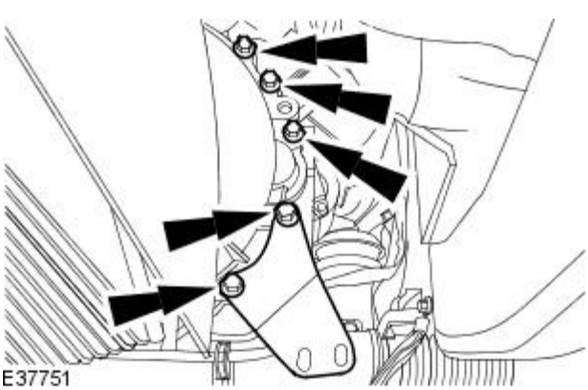

10. Remove the retaining bolts.

- Collect the mount bracket.

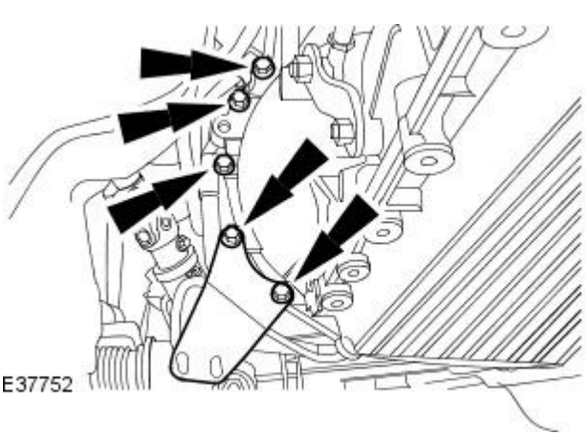

11. Remove the retaining bolts.

- Collect the mount bracket.

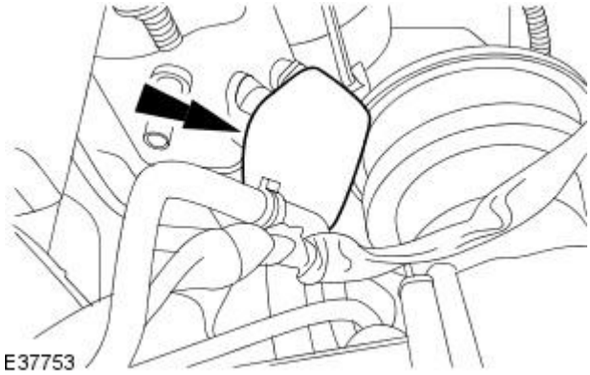

12. Reposition the starter motor cable cover.

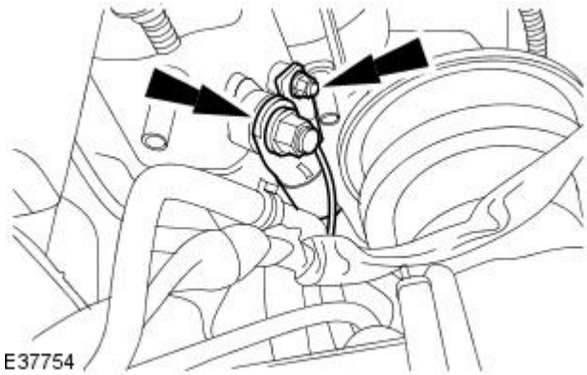

13. Detach the starter motor cables.

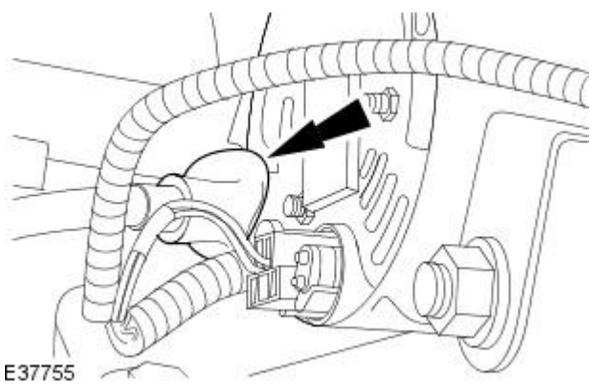

14. Reposition the generator cable cover.

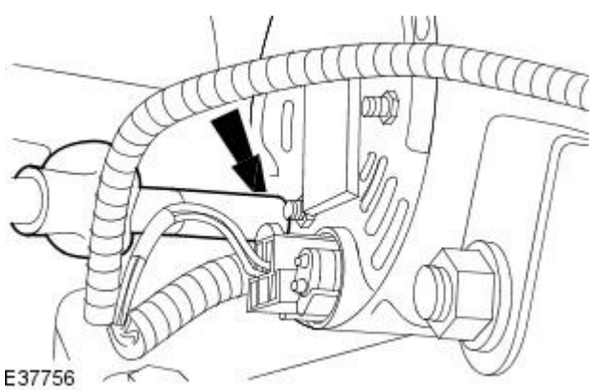

15. Detach the generator cable.

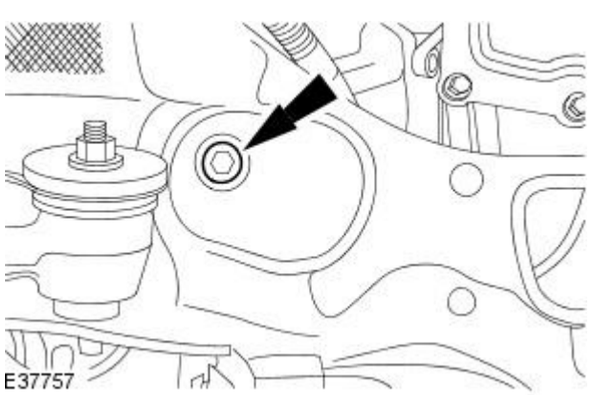

16. NOTE: Right-hand shown, left-hand similar.

Remove the engine mount retaining bolt.

17. Lower the vehicle.

18. CAUTIONS:

If power steering fluid comes into contact with the paintwork, the affected area must be immediately washed down with cold water.

Cap the power steering line to prevent loss of fluid and dirt ingress.

• NOTE: Drain the fluid into a suitable container.

Disconnect the power steering reservoir hose.

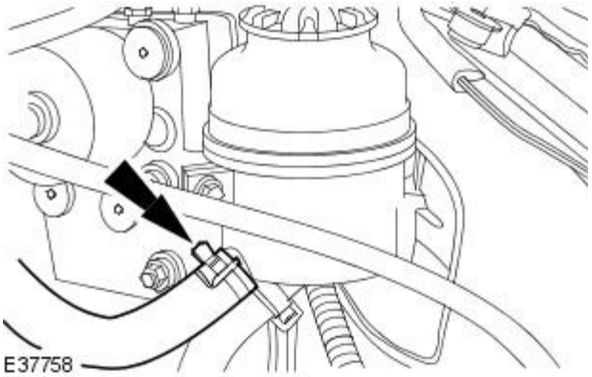
E37758

19. CAUTIONS:

If power steering fluid comes into contact with the paintwork, the affected area must be immediately washed down with cold water.

Cap the power steering lines to prevent loss of fluid and dirt ingress.

• NOTE: Drain the fluid into a suitable container.

Disconnect the power steering pump line.

- Remove and discard the O-ring seal.

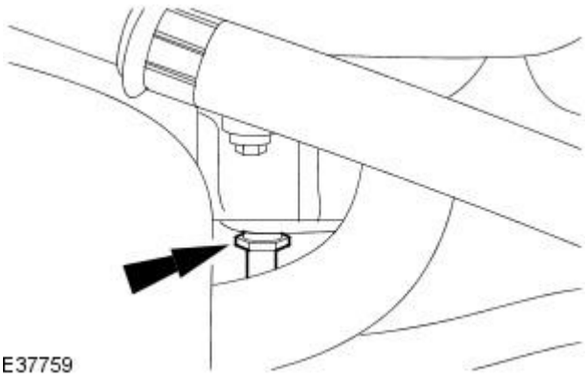
E37759

20. NOTE: Cap the exposed ports.

Disconnect the air conditioning line.

- Remove the retaining nut.
- Remove and discard the O-ring seal.

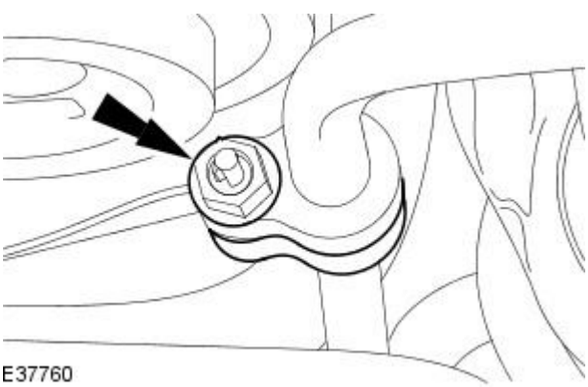
E37760

21. Release the fuel system pressure.
For additional information, refer to Section 310-00 Fuel System - General Information.

22. Disconnect the fuel line.
For additional information, refer to Section 310-00 Fuel System - General Information.

23. Disconnect the coolant hoses.

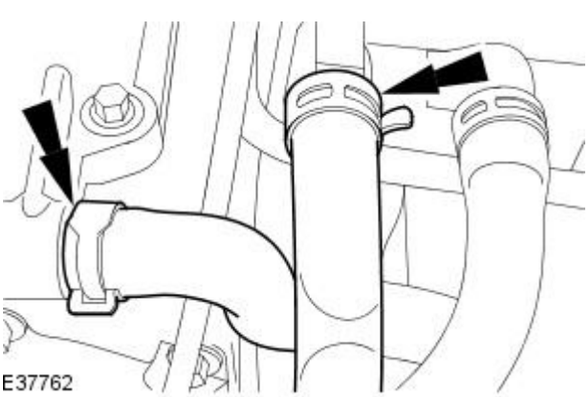
E37762

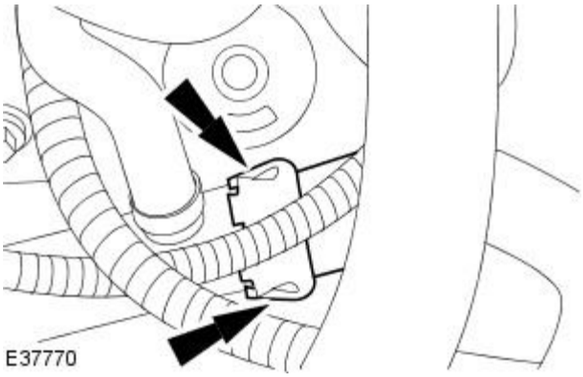

24. Disconnect the coolant hose.

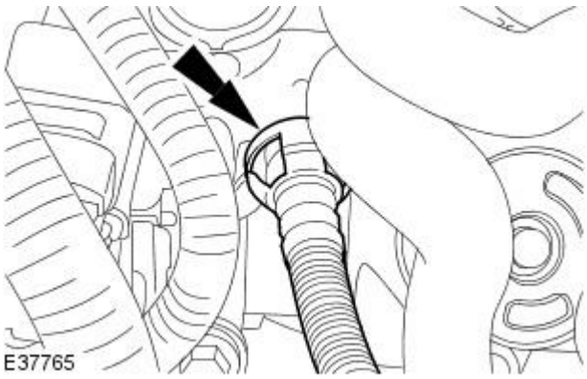

25. Disconnect the pipe.

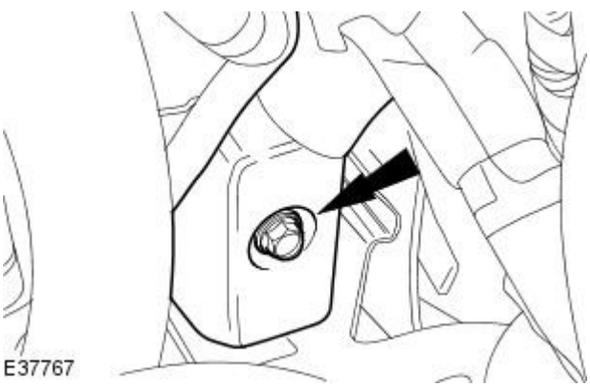

26. NOTE: The electrical connector retaining bolt remains captive in the electrical connector.

Disconnect the electrical connector.

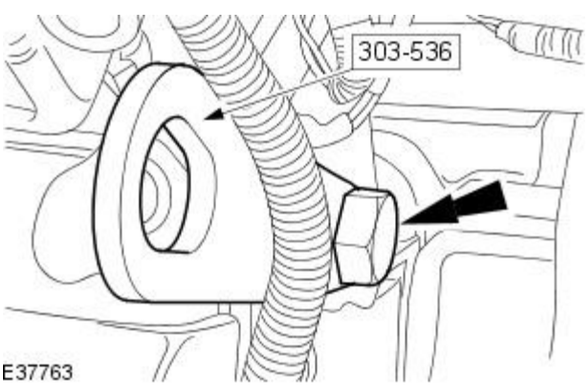

27. Install the rear engine lifting bracket.

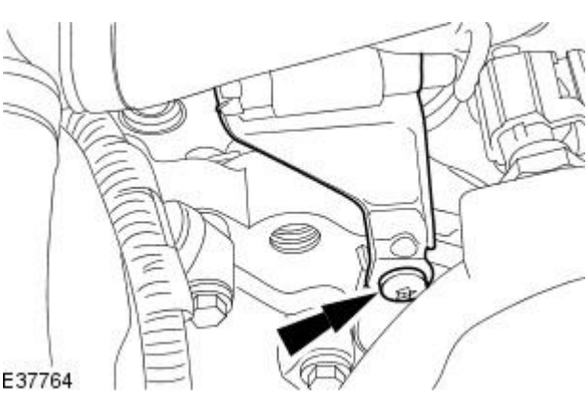

28. Remove the retaining bolt.

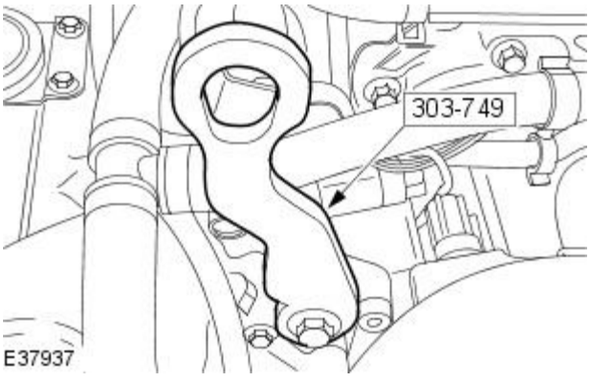

29. Install the front engine lifting bracket.

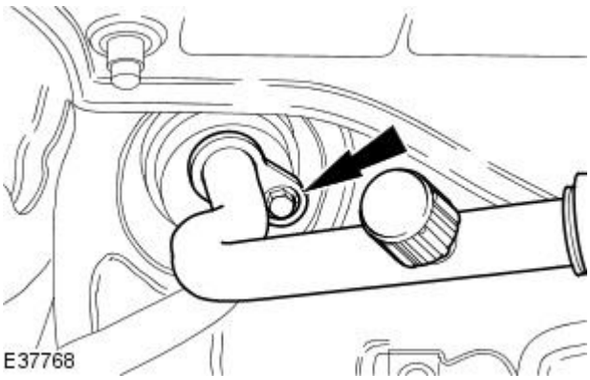

30. NOTE: Cap the exposed ports.

Disconnect the air conditioning line.

- Remove the retaining nut.
- Remove and discard the O-ring seal.

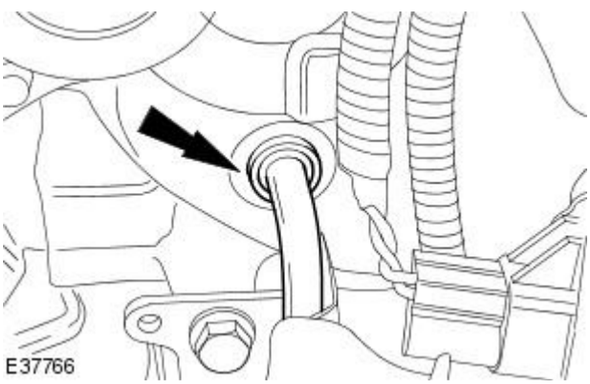

31. Disconnect the pipe.

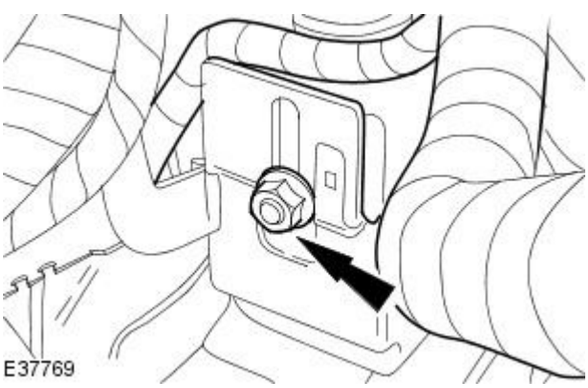

32. Detach the electrical connector.

- Remove the retaining nut.

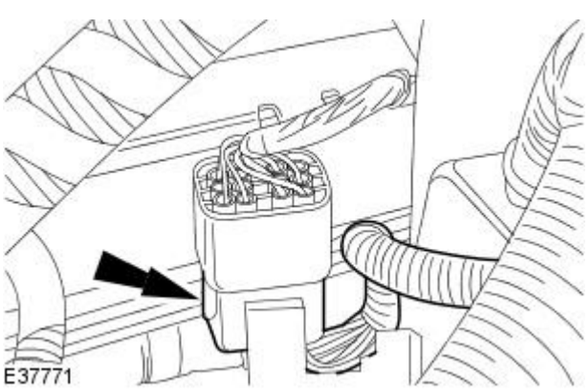

33. Disconnect the electrical connector.

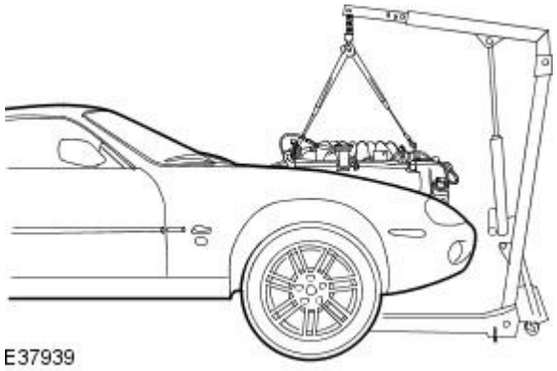

34. CAUTION: Do not support the automatic gearbox on the fluid pan. Failiure to follow these instruction may result in damage to the vehicle.

Using suitable hydraulic lift raise the engine.

- Support the automatic gearbox.

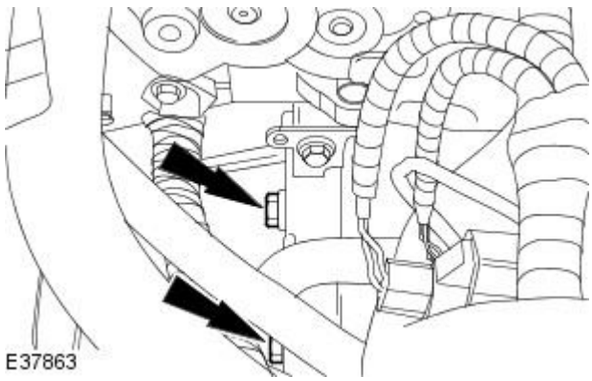

35. Remove the retaining bolts.

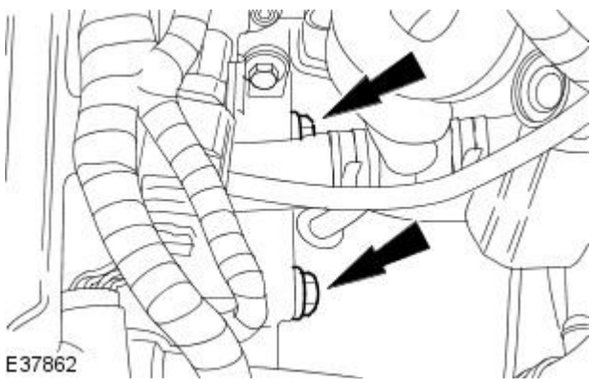

36. Remove the retaining bolts.

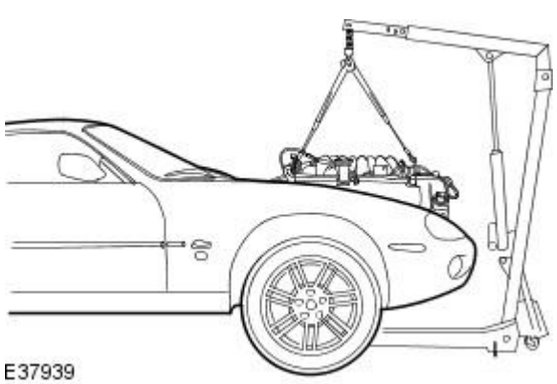

37. CAUTION: Make sure the torque converter hub is fully engage in the oil pump drive gear throughout the removal procedure. Failiure to follow these instruction may result in damage to the vehicle.

Remove the engine using a suitable hydraulic lift.

Engine - Engine

Disassembly

Special Tool(s)	
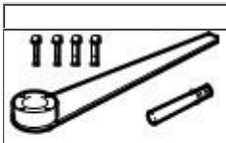 303-191	Crankshaft locking, main tool 303-191
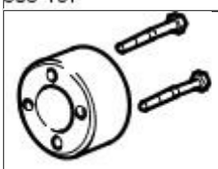 303-191-02	Adapter 303-191-02
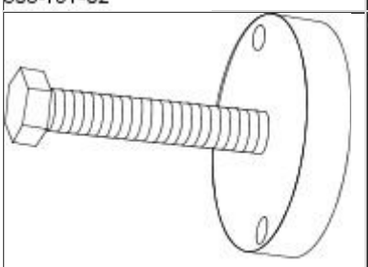 303-58	Crankshaft pulley/damper remover 303-588
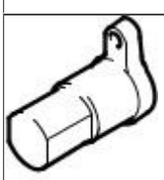 303-645	Crankshaft setting, main tool 303-645
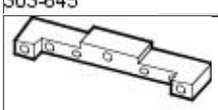 303-530	Camshaft setting 303-530
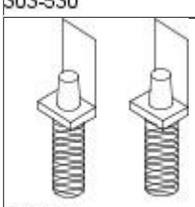 303535	Cylinder Bore Protectors 303-535

Disassembly

Vehicles with supercharger

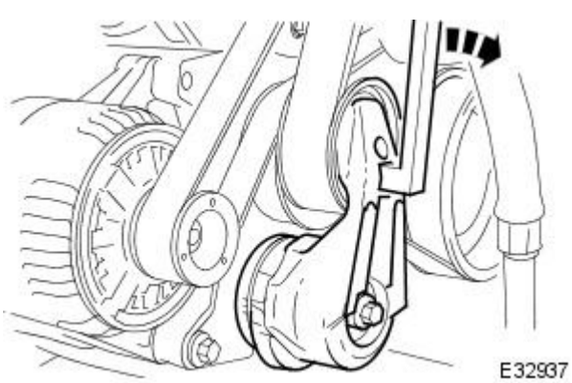

1. Detach the supercharger belt.

- Use a 1/2 inch square drive bar to rotate the supercharger belt tensioner.
- Detach the supercharger belt.

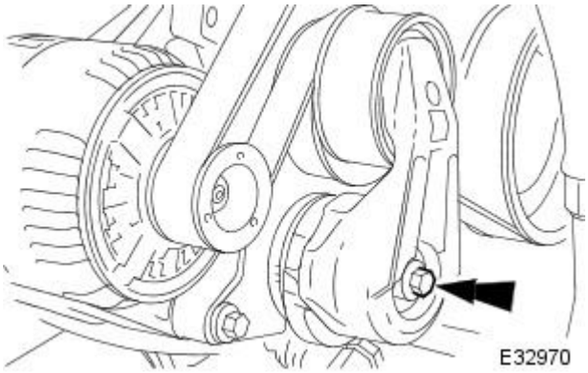

2. Remove the supercharger drive belt tensioner.

- Remove the super charger drive belt.

All vehicles

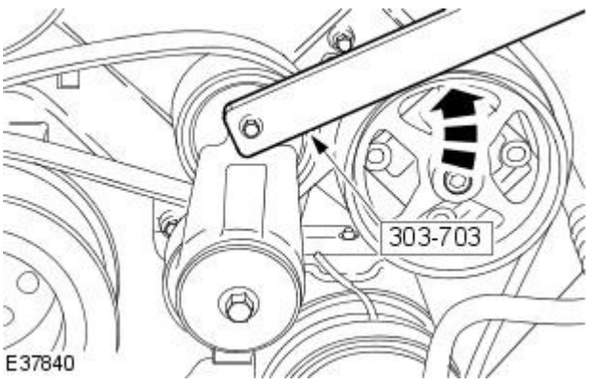

3. Release the accessory drive belt tension.

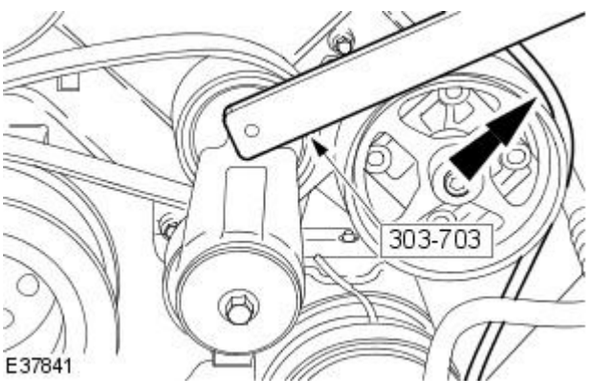

4. Detach the accessory drive belt.

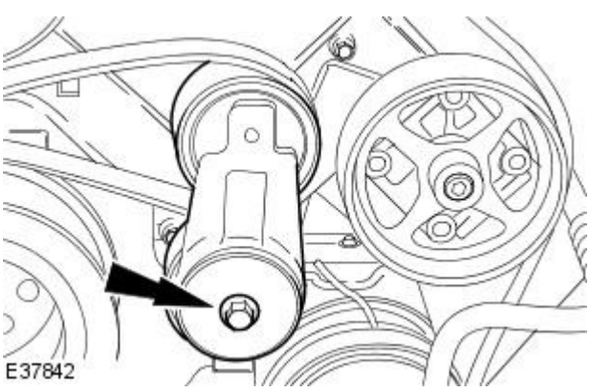

5. Remove the drive belt tensioner.

- Remove the drive belt.

Vehicles with supercharger

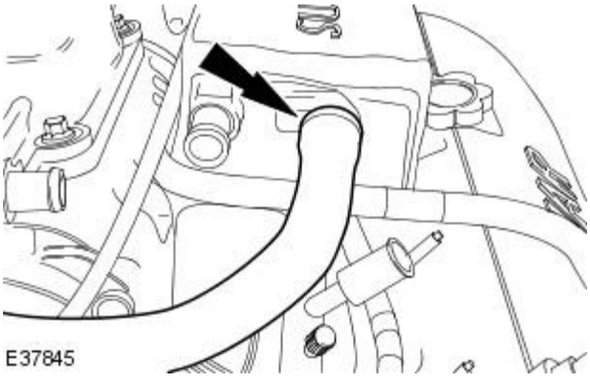

6. Detach the coolant hose.

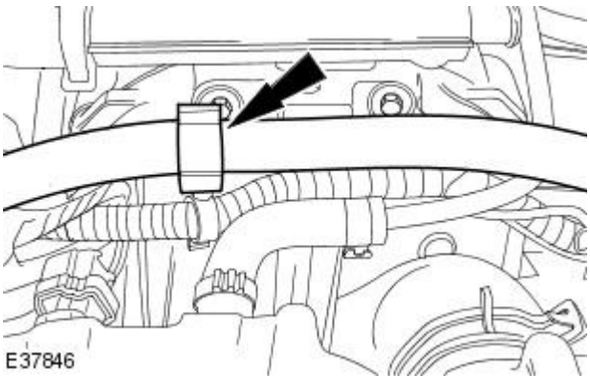

7. Detach the coolant hose.

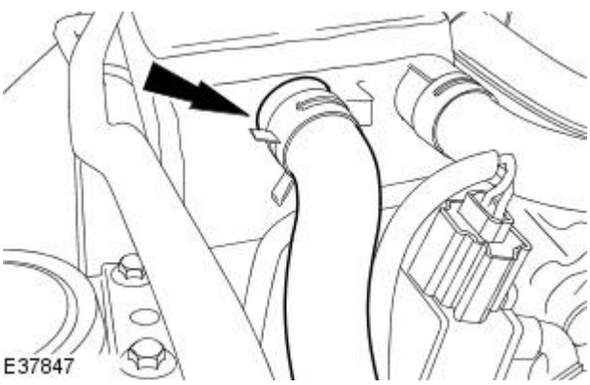

8. Detach the coolant hose.

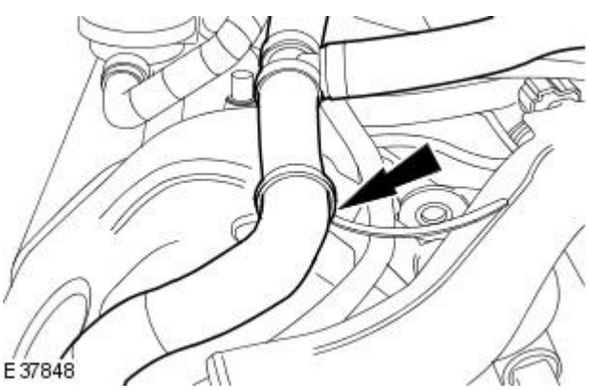

9. Remove the coolant hose.

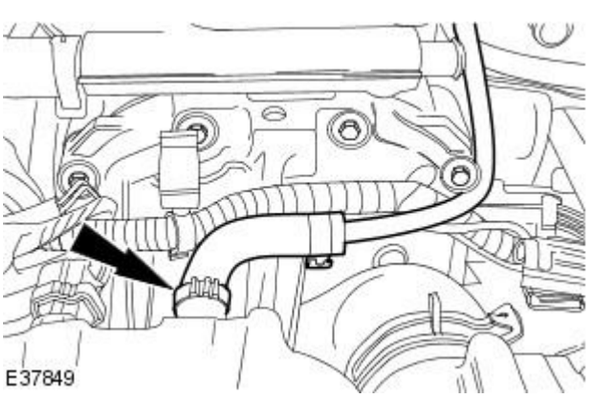

10. Remove the coolant hose.

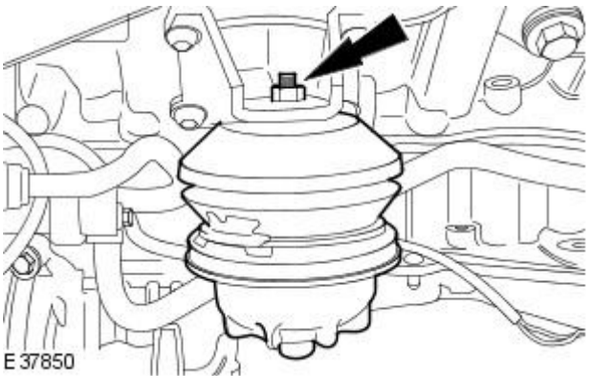

11. Remove the left-hand engine mount.

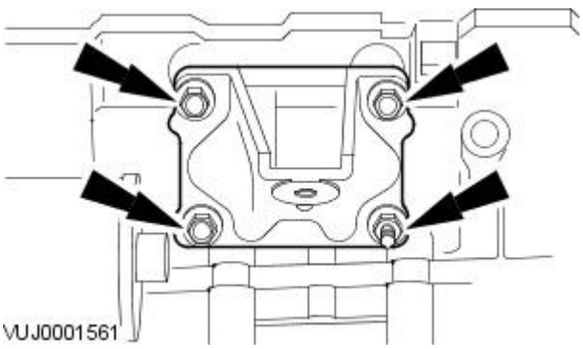

12. Remove the engine mount bracket.

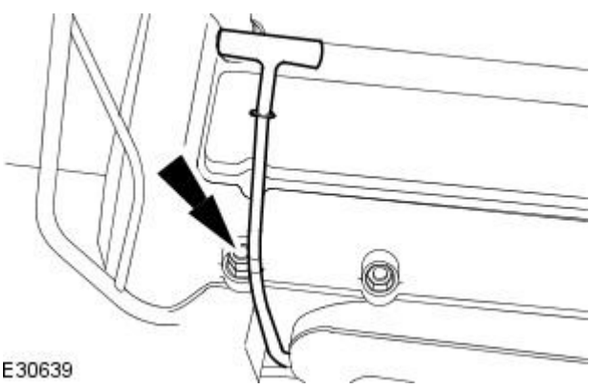

13. Remove the oil level indicator and tube.

- Remove and discard the O-ring seal.

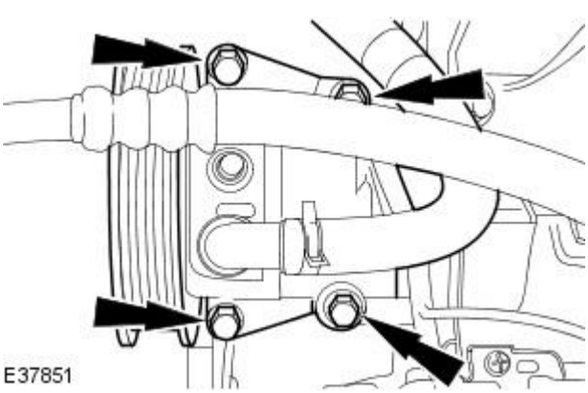

14. Remove the power steering pump.

- Remove the securing bolts.

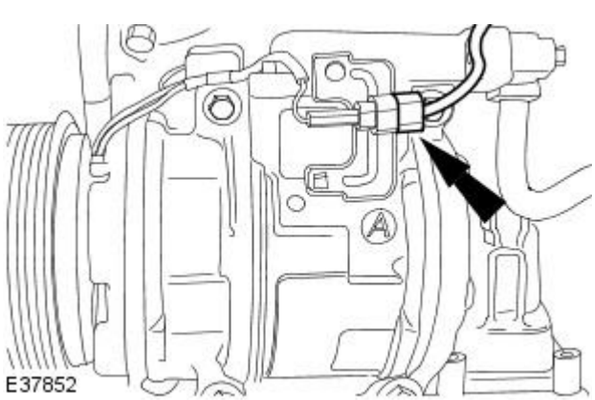

15. Disconnect the electrical connector.

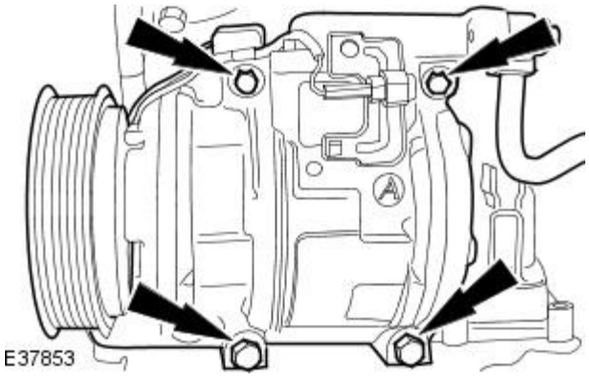

16. Remove the air conditioning (A/C) compressor.

- Remove the securing bolts.

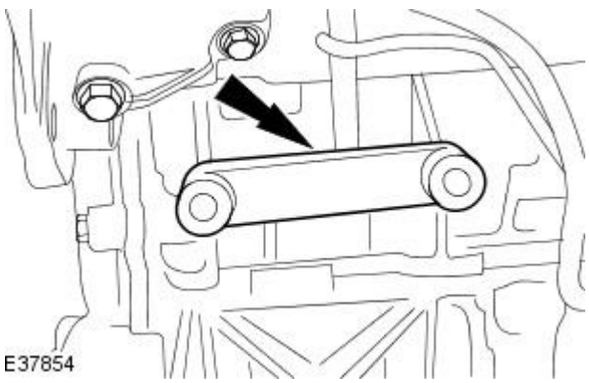

17. Remove the mount bracket.

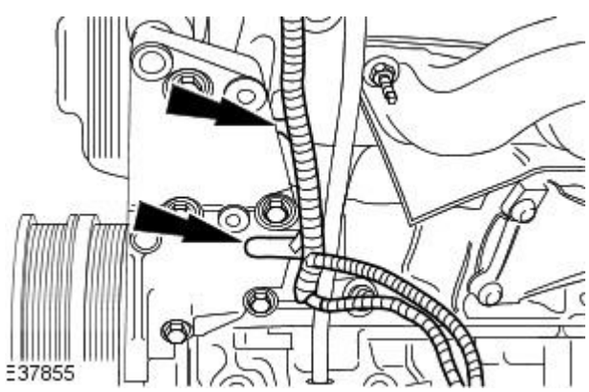

18. Detach the wiring harness.

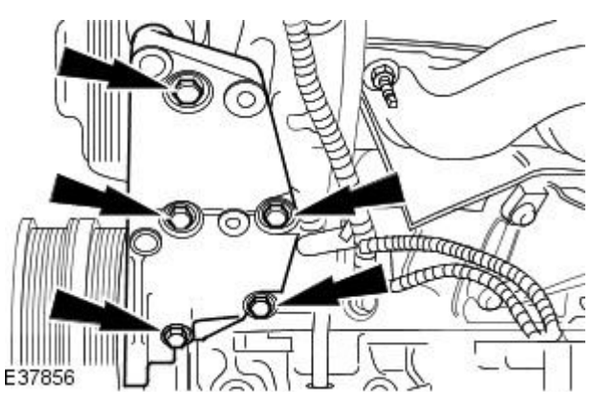

19. Remove the mount bracket.

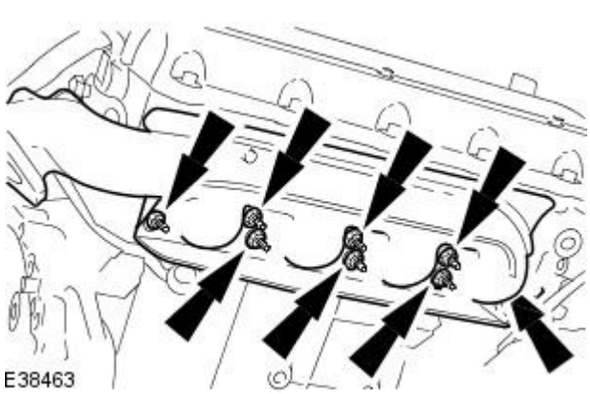

20. Remove the left-hand exhaust manifold.

- Remove and discard the gasket.

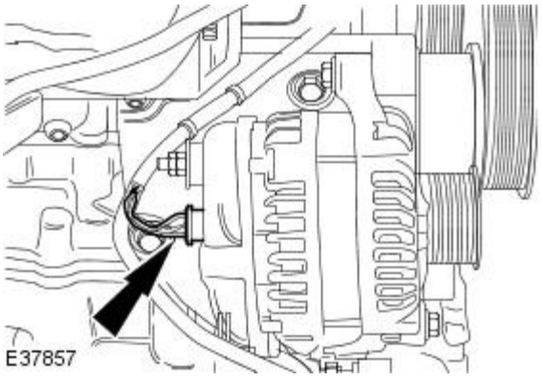

21. Disconnect the electrical connector.

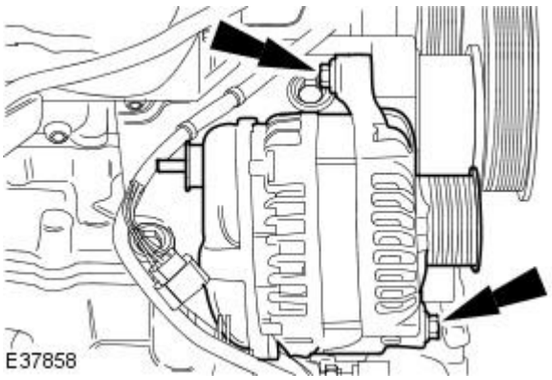

22. Remove the generator.

- Remove the retaining bolts.

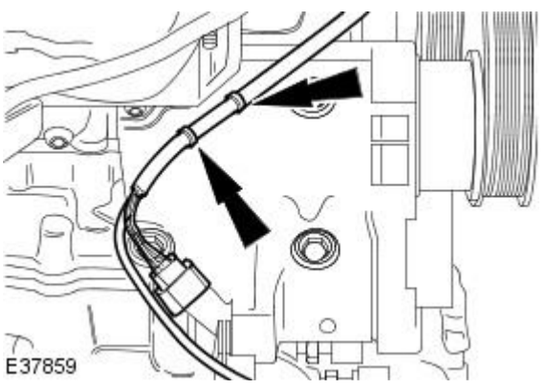

23. Detach the wiring harness.

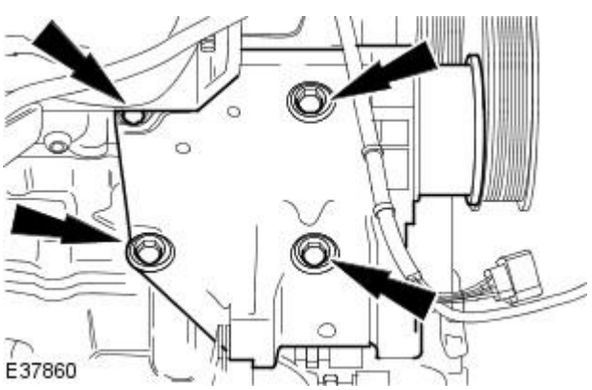

24. Remove the mount bracket.

- Remove the retaining bolts.

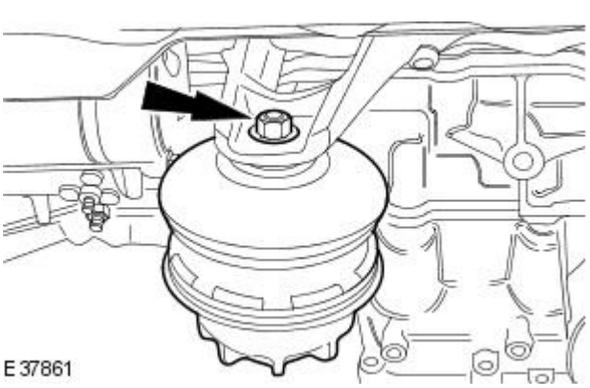

25. Remove the right-hand engine mount.

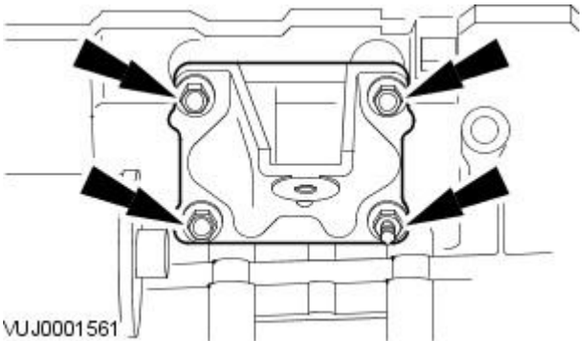

26. Remove the engine mount bracket.

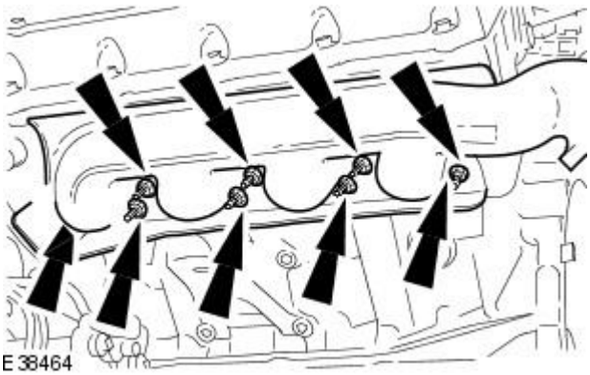

27. Remove the right-hand exhaust manifold.

- Remove and discard the gasket.

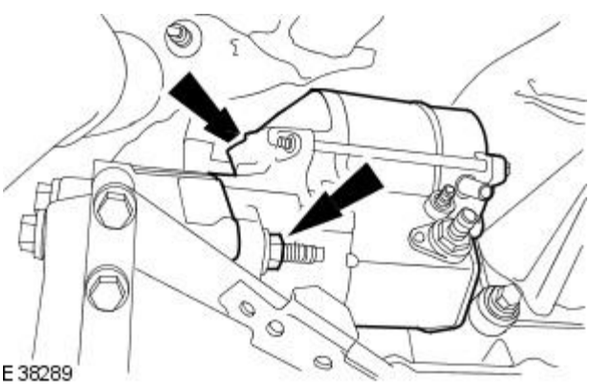

28. Remove the starter motor.

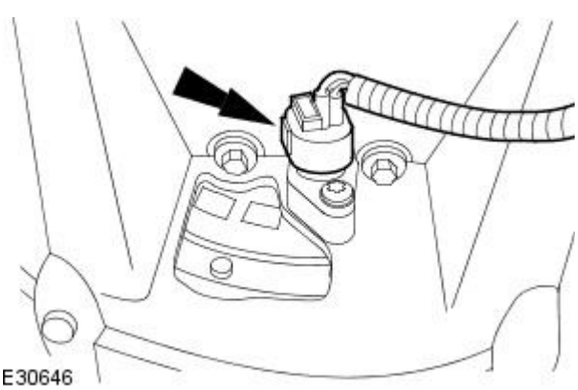

29. Disconnect the crankshaft position sensor electrical connector.

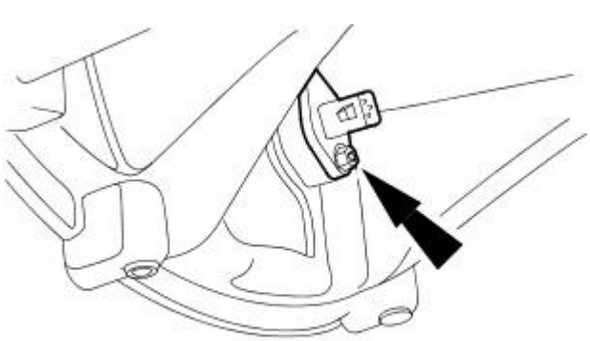

30. Remove the crankshaft position sensor.

31. Detach the wiring harness.

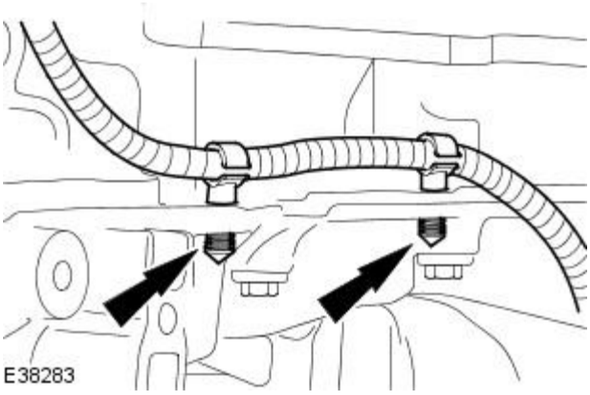

32. Detach the wiring harness.

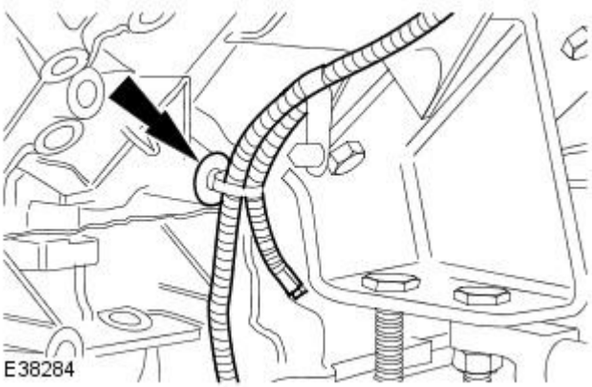

Vehicles with supercharger

33. Detach the engine wiring harness.

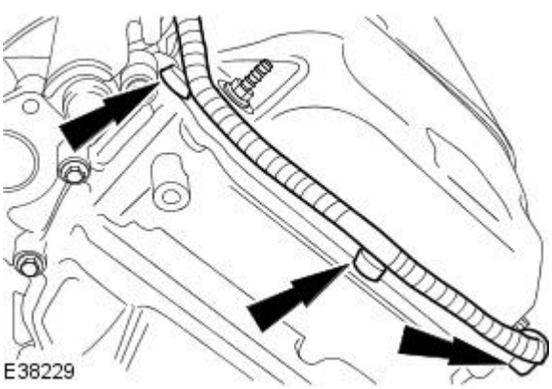

34. Disconnect the electrical connector.

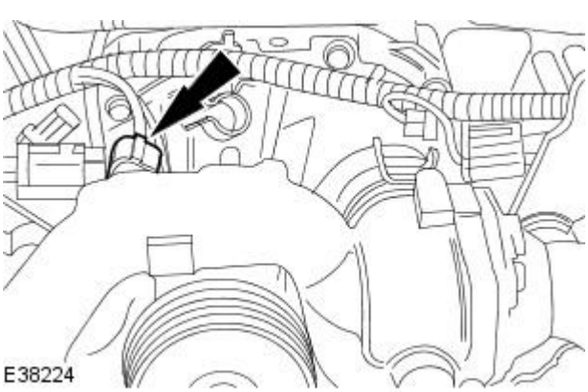

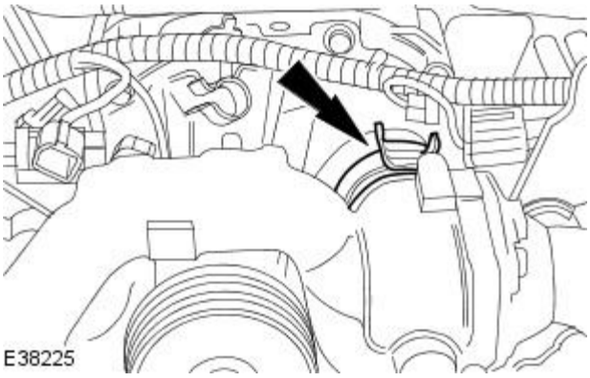

35. Detach the coolant hose.

- Reposition the retaining clip.

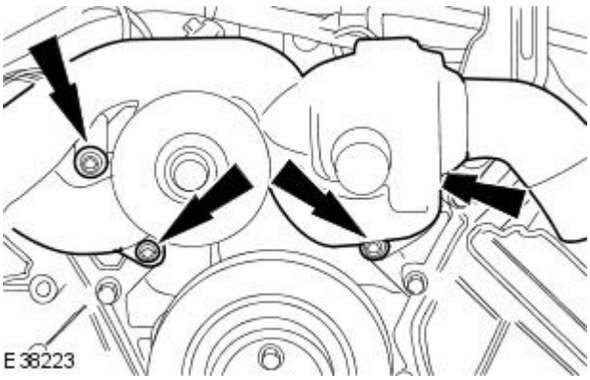

36. Detach the thermostat housing.

- Remove the retaining bolts

37. Remove the thermostat housing.

- Detach the coolant hose.

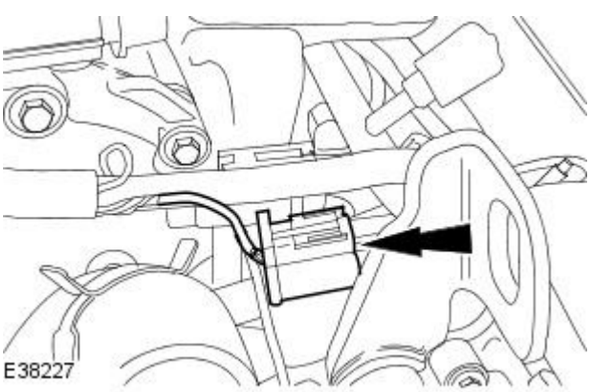

38. Disconnect the electrical connector.

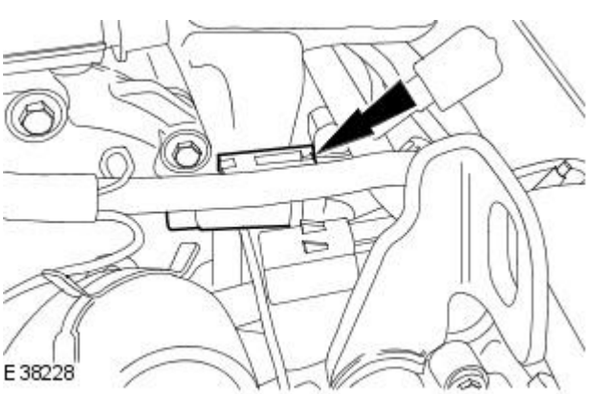

39. Disconnect the electrical connector.

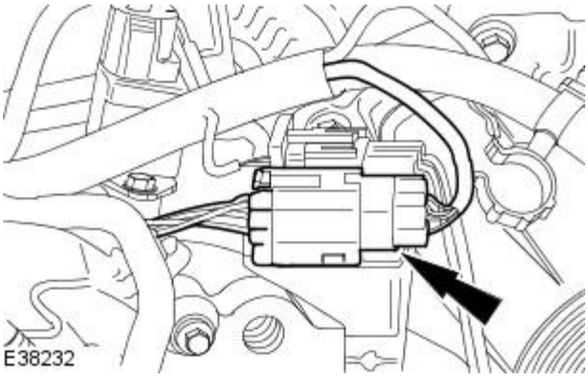

40. Disconnect the electrical connector.

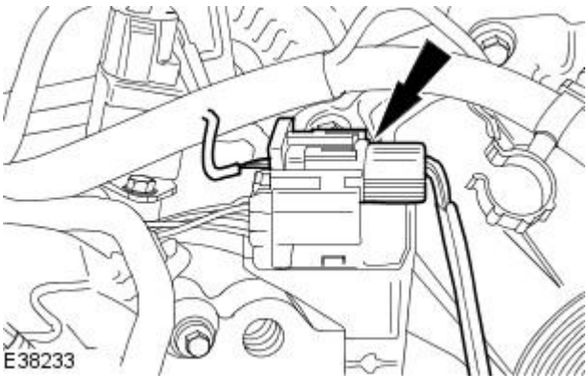

41. Disconnect the electrical connector.

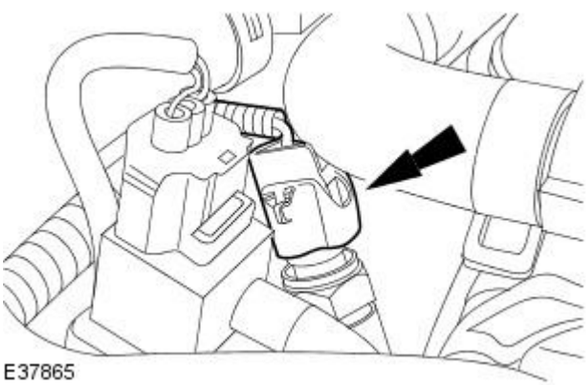

42. Disconnect the electrical connector.

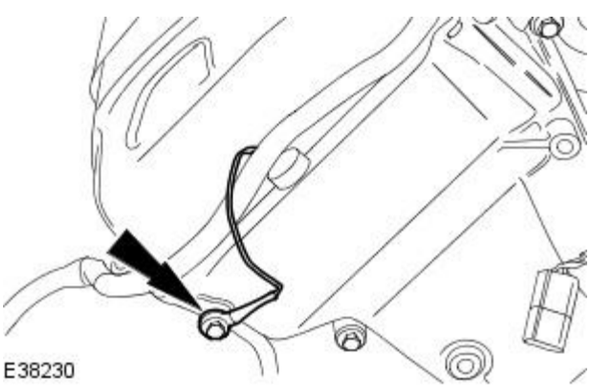

43. Detach the wiring harness.

- Remove the retaining bolt.

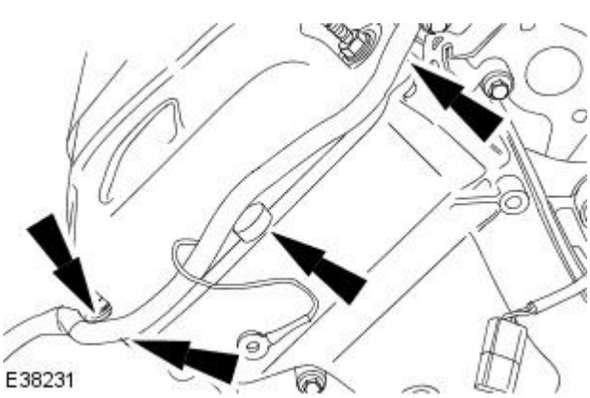

44. Detach the wiring harness.

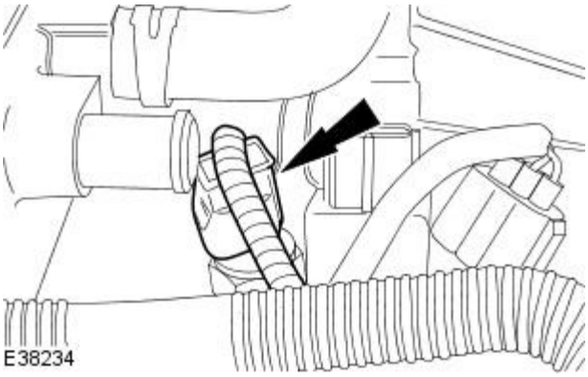

45. Detach the breather pipe.

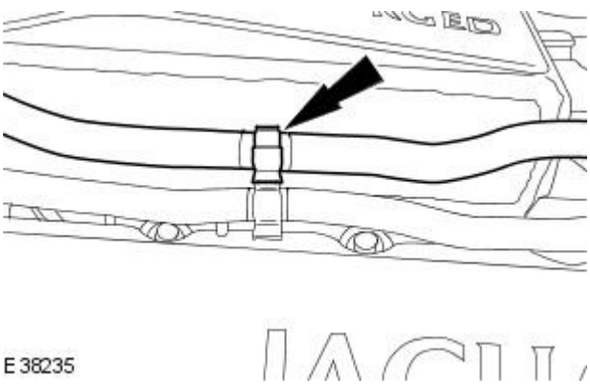

46. Disconnect the breather pipe.

All vehicles

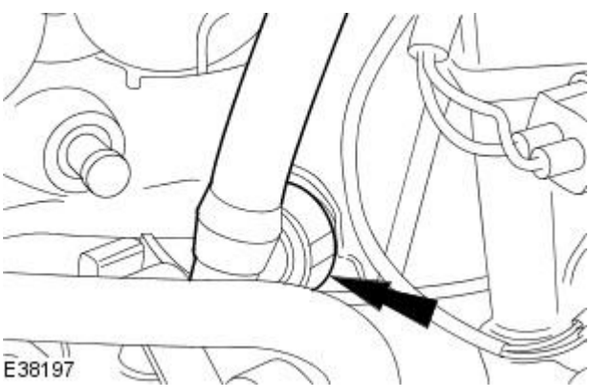

47. Remove the positive crankcase ventilation pipe.

Vehicles with supercharger

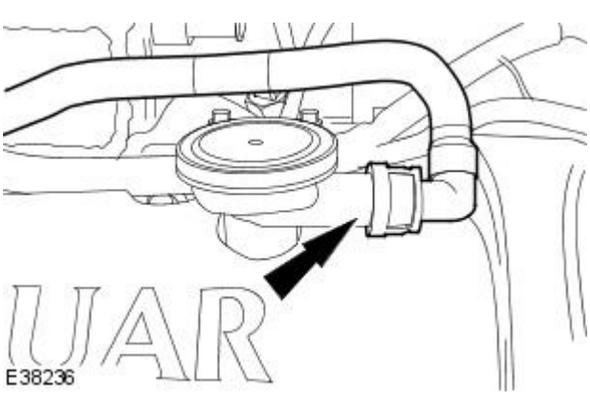

48. Detach the wiring harness.

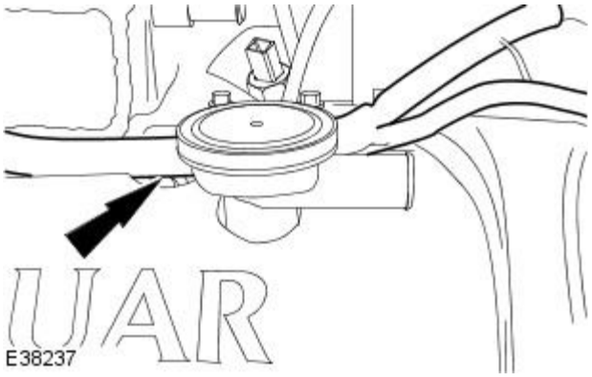

49. Detach the wiring harness.

All vehicles

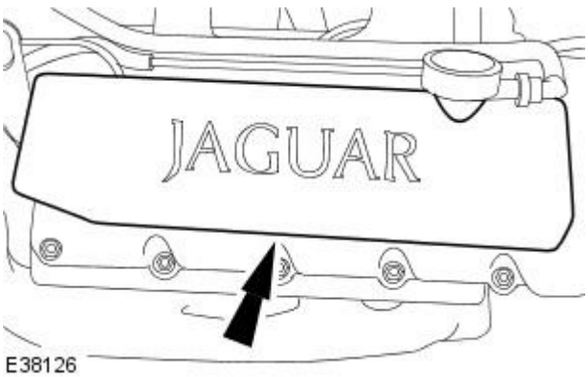

50. Remove the ignition coil-on-plug cover.

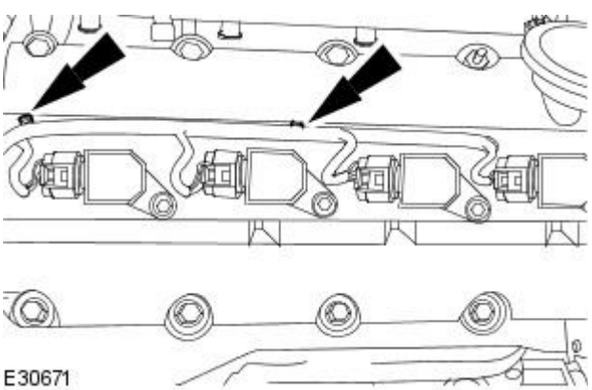

51. Detach the engine wiring harness.

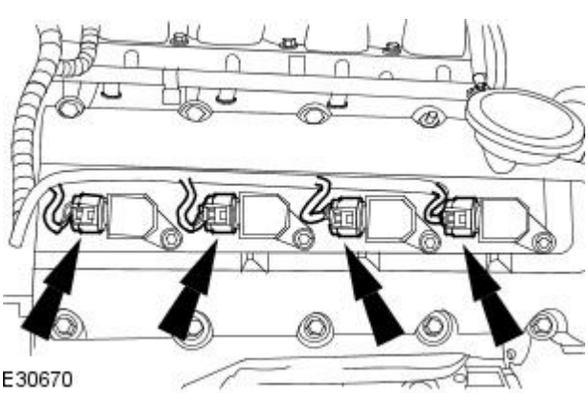

52. Disconnect the ignition coil-on-plug electrical connectors.

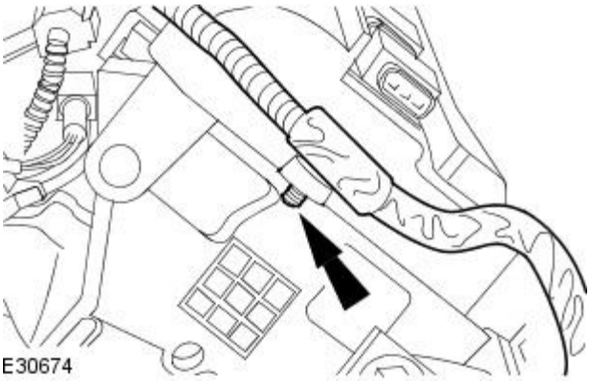

53. NOTE: Right hand shown, left hand similar.

Detach the engine wiring harness.

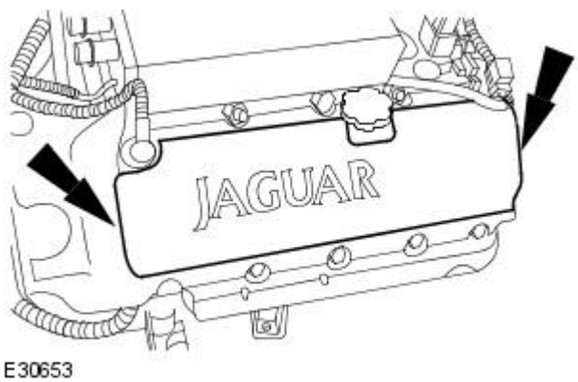

54. Remove the ignition coil-on-plug cover.

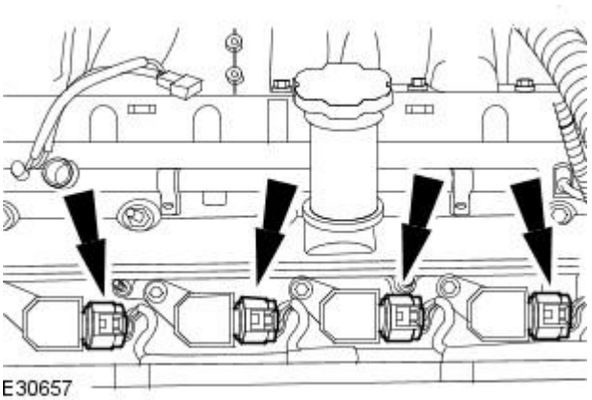

55. Disconnect the ignition coil electrical connectors.

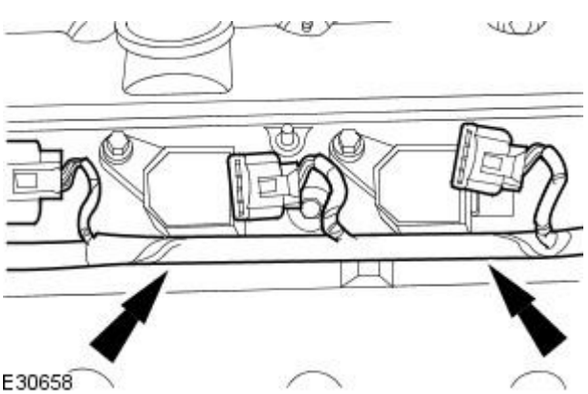

56. Detach the engine wiring harness.

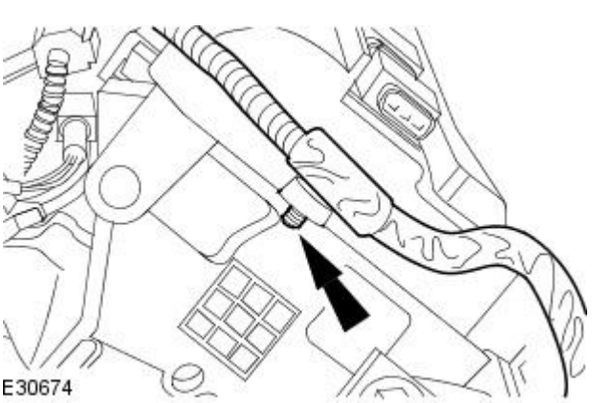

57. Detach the engine wiring harness.

Vehicles without supercharger

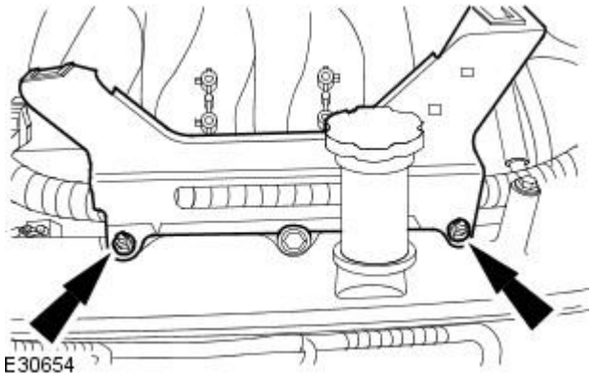

58. NOTE: Left hand shown, right hand similar.

Remove the engine cover retaining bracket.

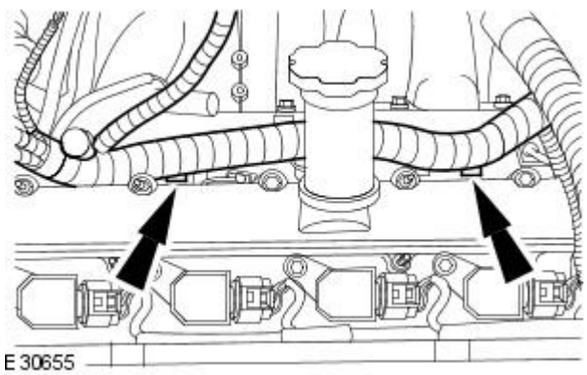

59. NOTE: Left hand shown, right hand similar.

Detach the engine wiring harness.

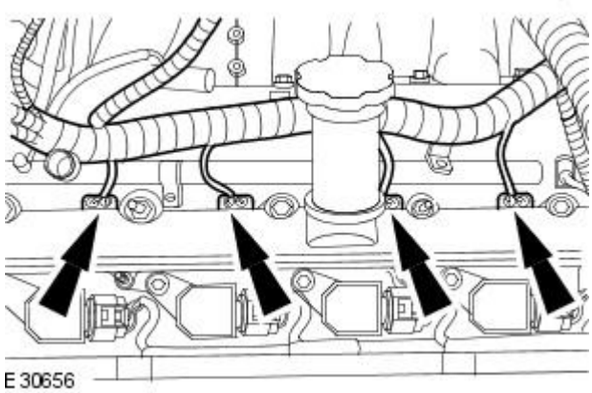

60. NOTE: Left hand shown, right hand similar.

Disconnect the fuel injector electrical connectors.

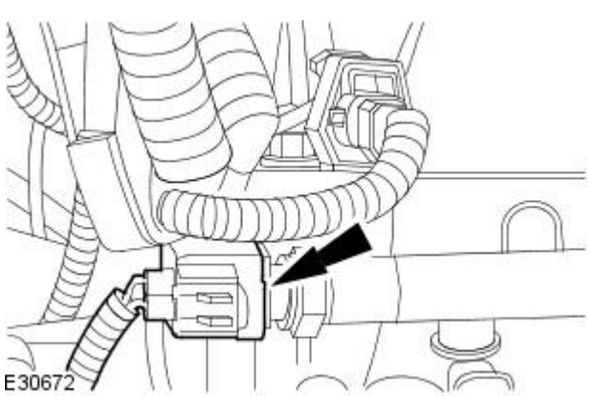

61. Disconnect the fuel temperature sensor electrical connector.

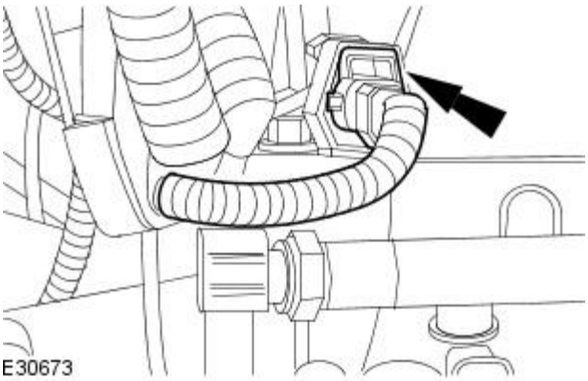

62. NOTE: Right hand shown, left hand similar.

Disconnect the camshaft position sensor electrical connector.

Vehicles with supercharger

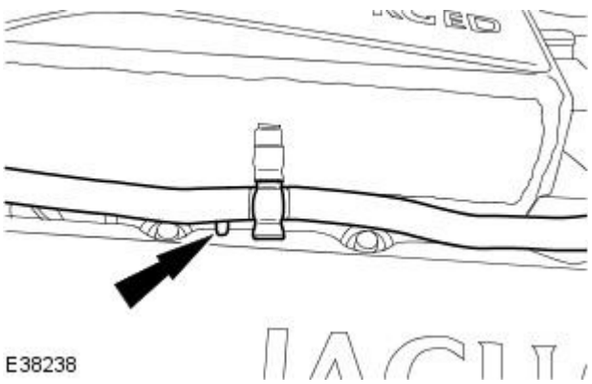

63. NOTE: Right hand shown, left hand similar.

Disconnect the camshaft position sensor electrical connector.

64. Disconnect the fuel temperature sensor electrical connector.

All vehicles

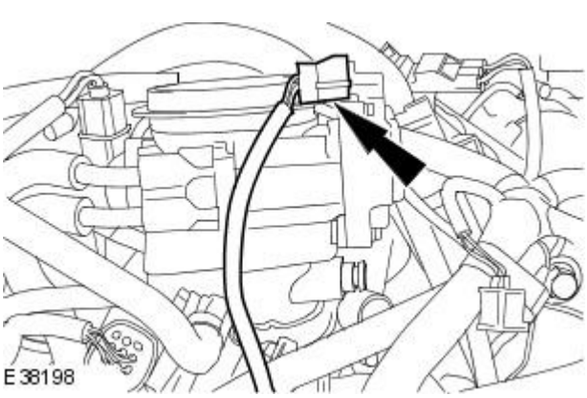

65. Disconnect the throttle motor electrical connector.

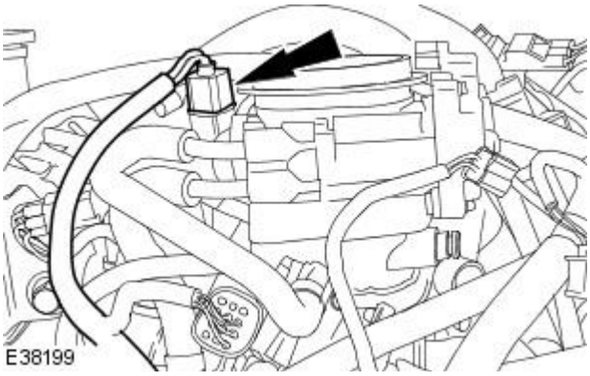

66. Disconnect the throttle position (TP) sensor electrical connector.

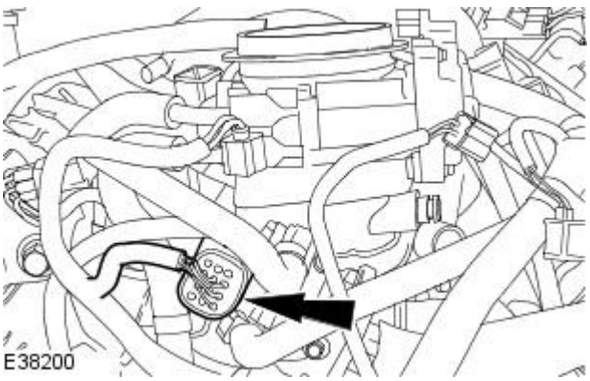

67. Disconnect the exhaust gas recirculation (EGR) valve electrical connector.

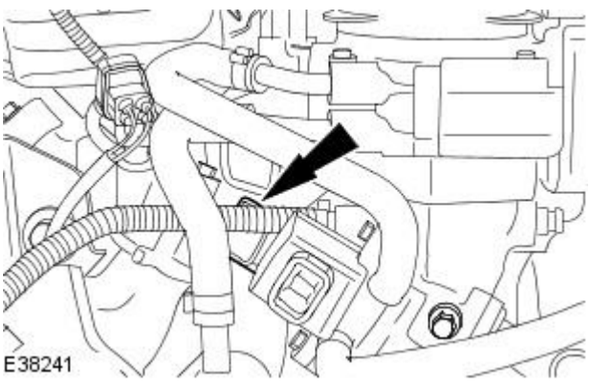

68. Disconnect the manifold absolute pressure (MAP) sensor

Vehicles without supercharger

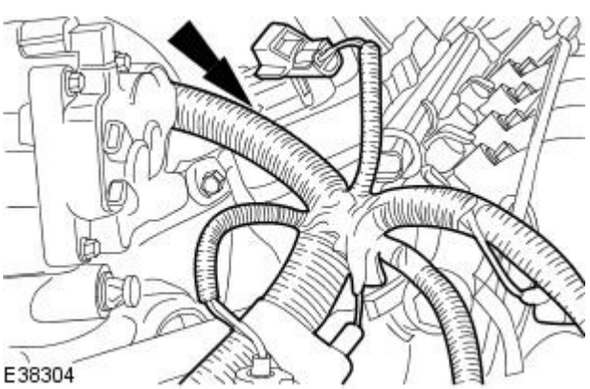

69. Remove the engine wiring harness.

Vehicles with supercharger

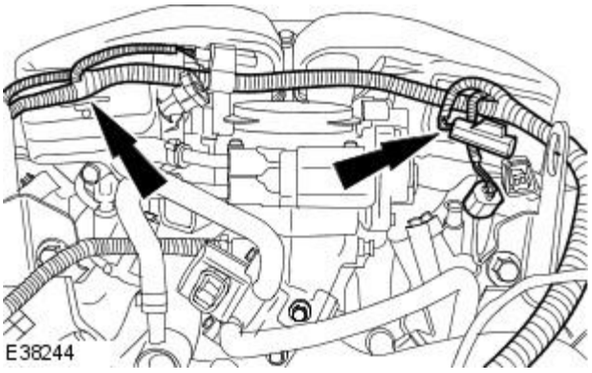

70. Remove the engine wiring harness.

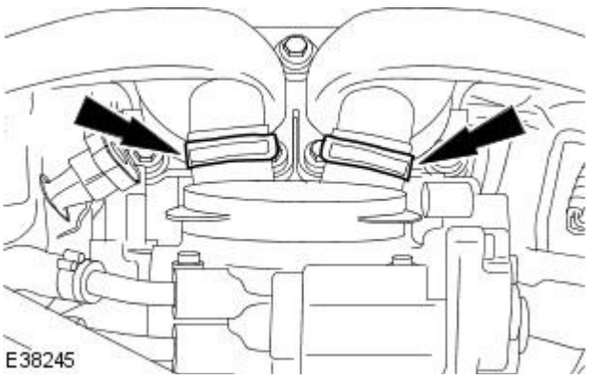

71. Reposition the retaining clips.

All vehicles

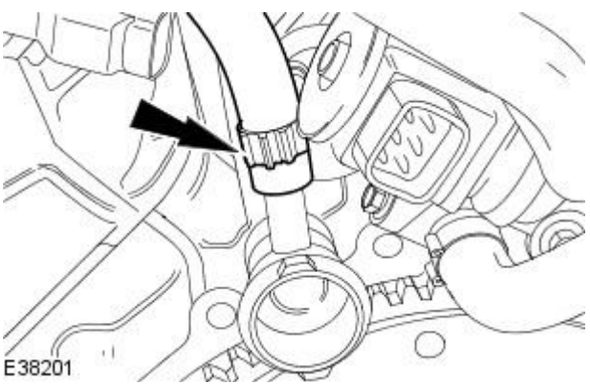

72. Disconnect the coolant hose.

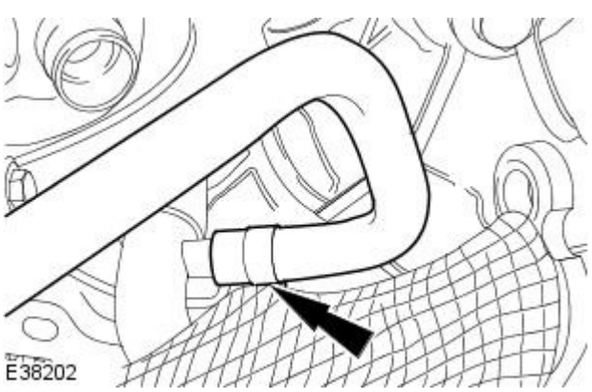

73. Disconnect the coolant hose.

Vehicles with supercharger

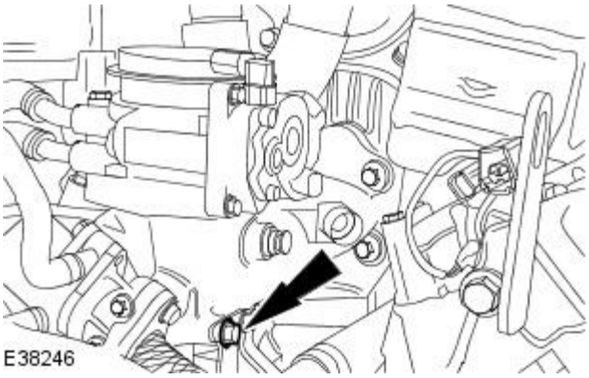

74. Remove the retaining bolt.

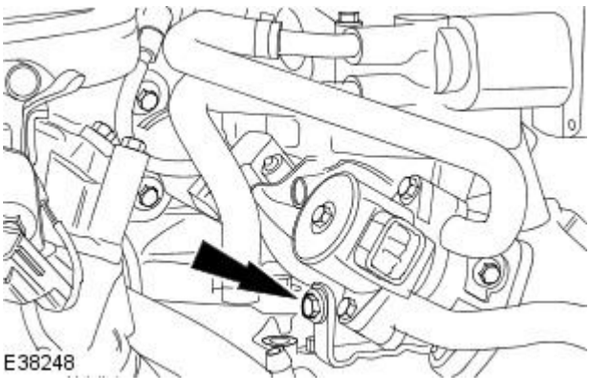

75. Remove the retaining bolt.

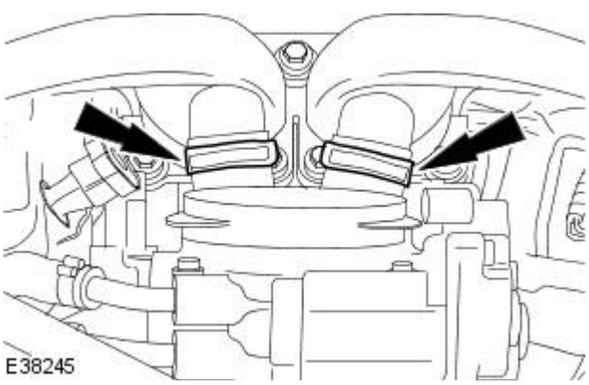

76. Reposition the retaining clips.

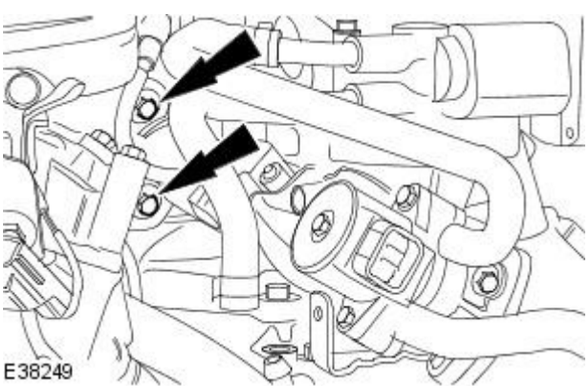

77. Remove the retaining bolts.

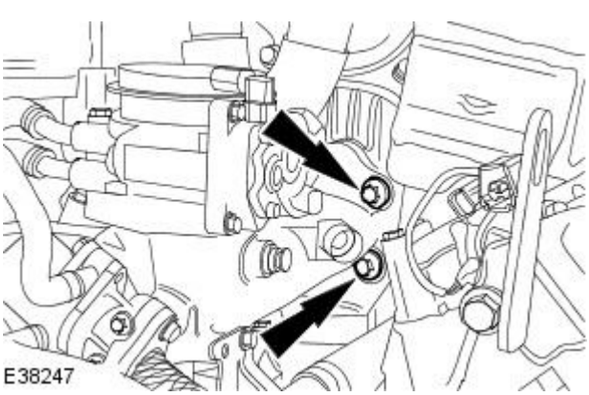

78. Remove the throttle body and throttle body elbow assembly.

- Remove the retaining bolts.
- Remove and discard the gasket.

Vehicles without supercharger

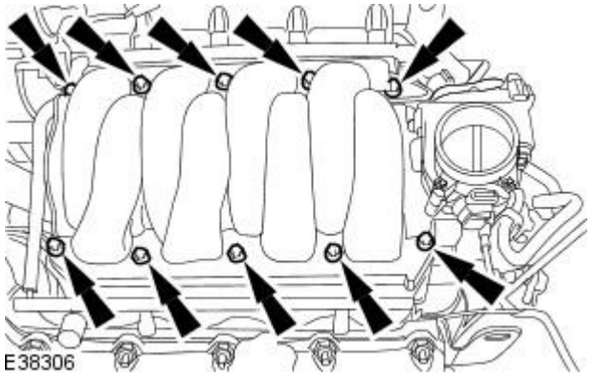

79. Remove the intake manifold.

Vehicles with supercharger

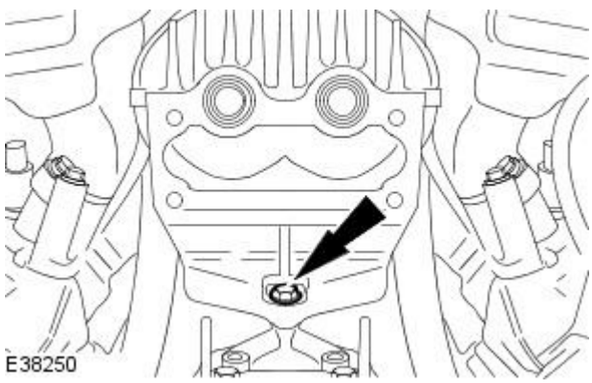

80. Remove the retaining bolt.

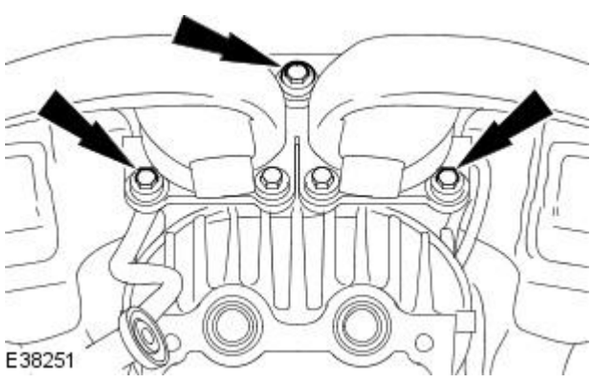

81. Remove the retaining bolts.

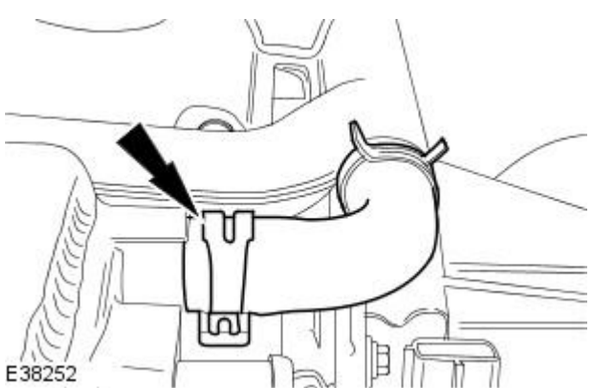

82. Disconnect the coolant hose.

- Reposition the retaining clip.

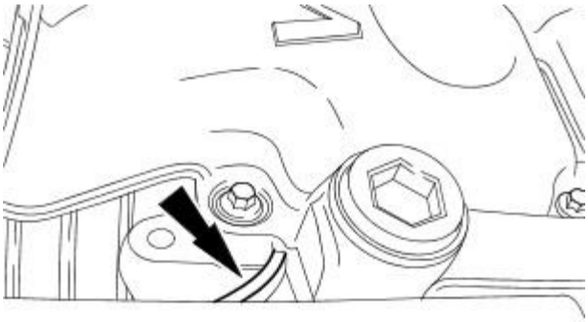

E38253

83. Disconnect the vacuum hose.

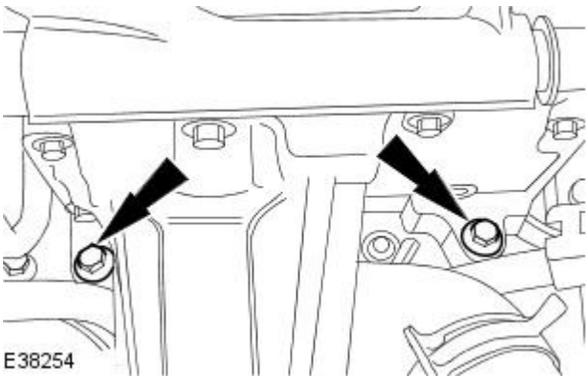

E38254

84. Remove the supercharger.

- Remove the retaining bolts.
- Collect the spacer.

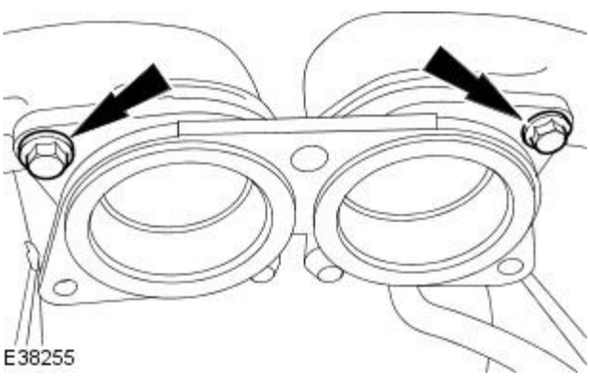

E38255

85. Remove the retaining bolts.

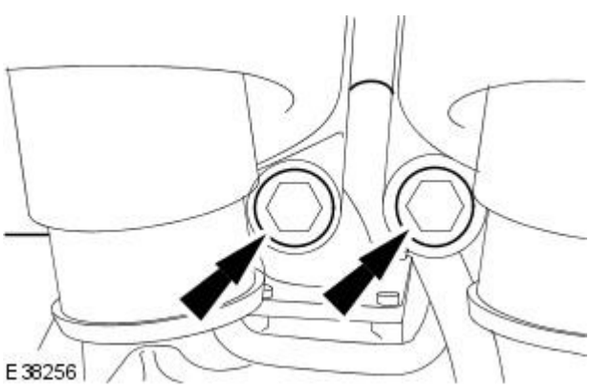

E38256

86. Remove the supercharger outlet pipe to charge air cooler ducts.

- Remove the retaining bolts.

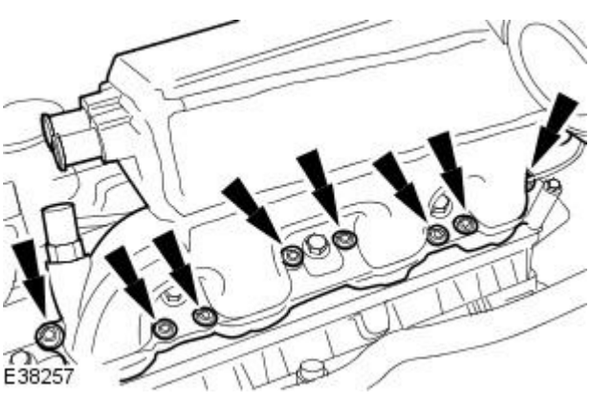

E38257

87. Remove the charge air cooler.

- Remove the retaining bolts.
- Remove and discard the gasket.

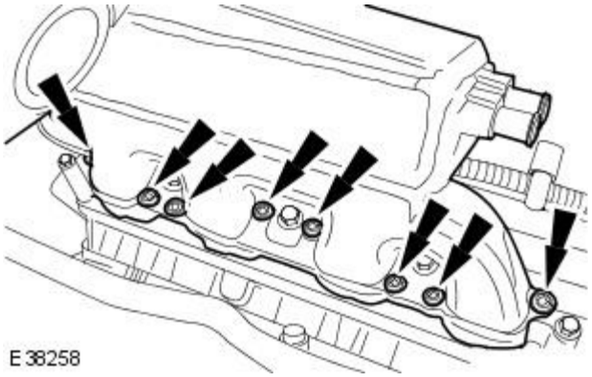

88. Remove the charge air cooler.

- Remove the retaining bolts.
- Remove and discard the gasket.

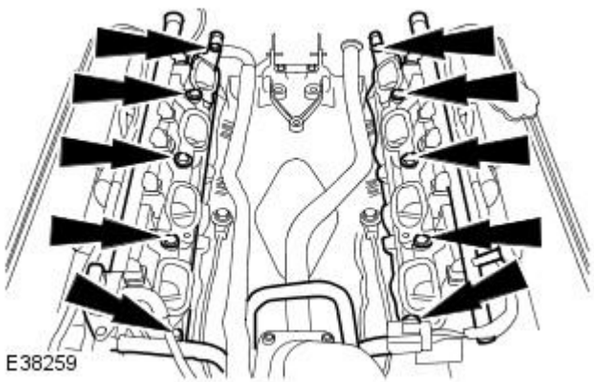

89. Remove the lower intake manifold.

- Remove the retaining bolts.
- Remove and discard the gaskets.

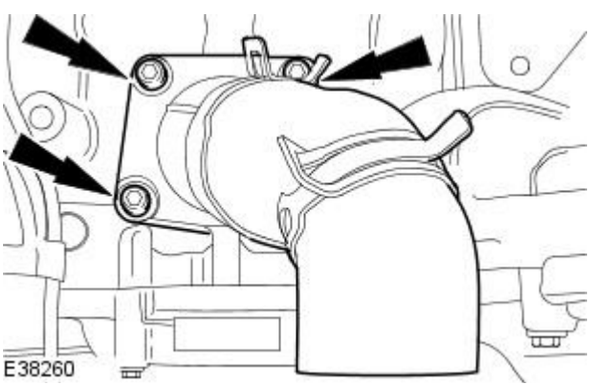

90. Remove the coolant bypass to water pump pipe.

- Remove the retaining bolts.
- Remove and discard the O-ring seal.

All vehicles

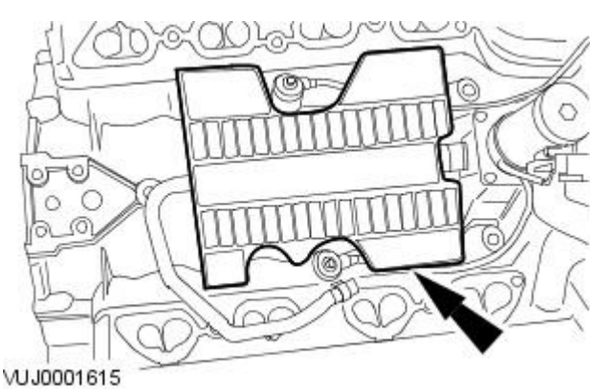

91. Remove the noise and vibration insulating pad.

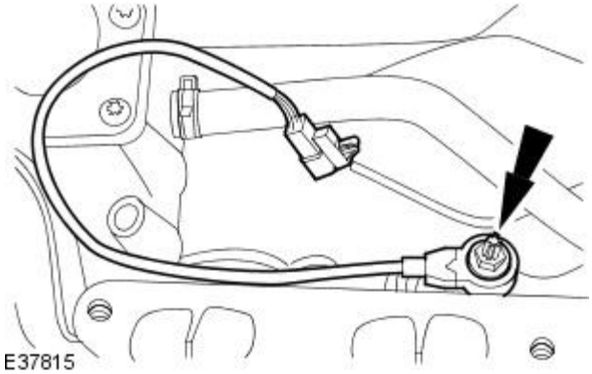

92. NOTE: Left hand shown, right hand similar.

Remove the knock sensors.

- Remove the retaining nut.

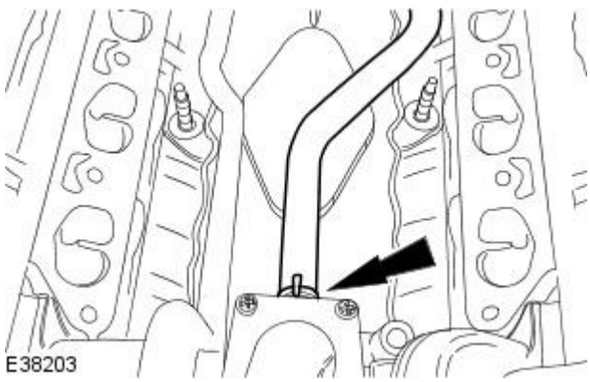

93. Remove the coolant hose.

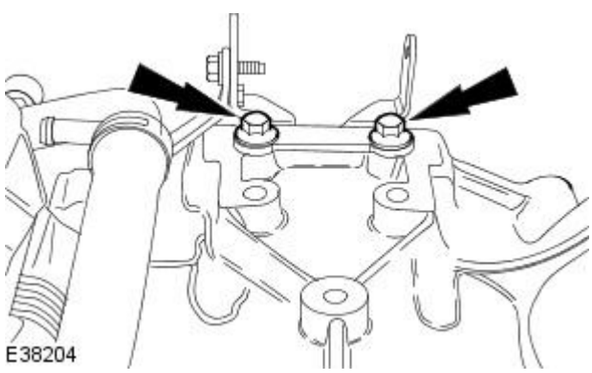

94. Detach the coolant hose.

- Remove the retaining bolts.

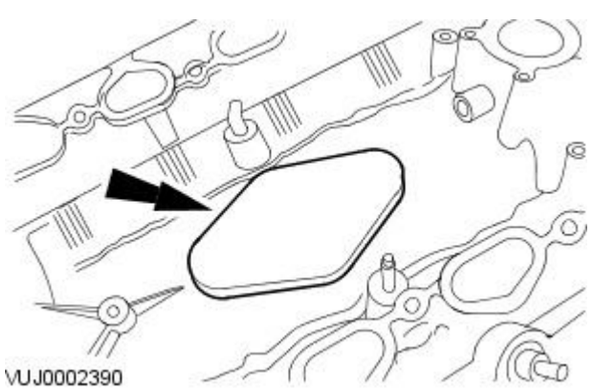

95. Remove the engine block insulation grommet.

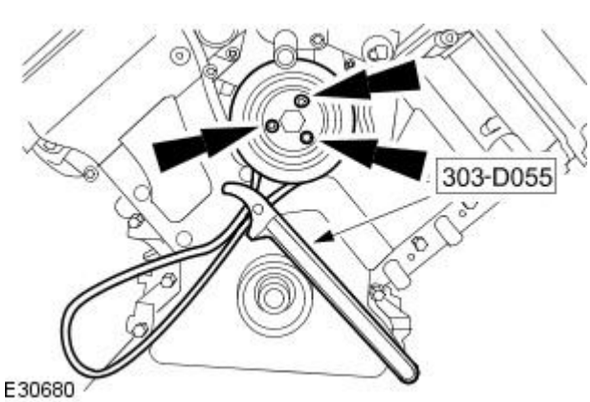

96. Remove the water pump pulley.

- Using special tool, retain the water pump pulley.

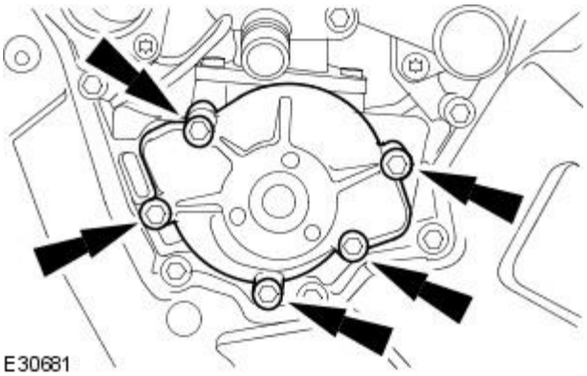

97. Remove the water pump.

- Remove and discard the gasket.
- Remove and discard the O-ring seal.

Vehicles without supercharger

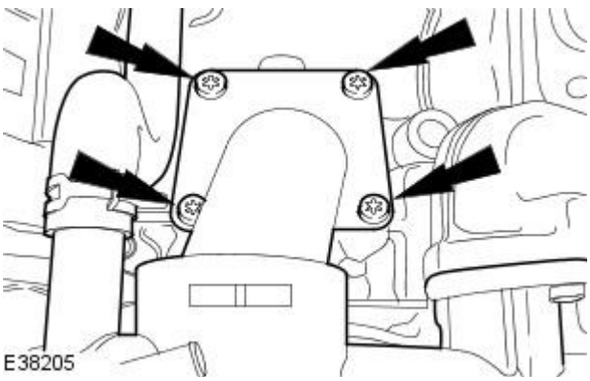

98. Remove the retaining bolts.

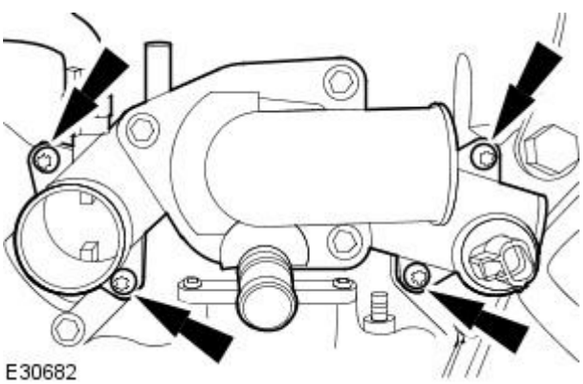

99. Remove the thermostat housing.

- Remove and discard the O-ring seals.

All vehicles

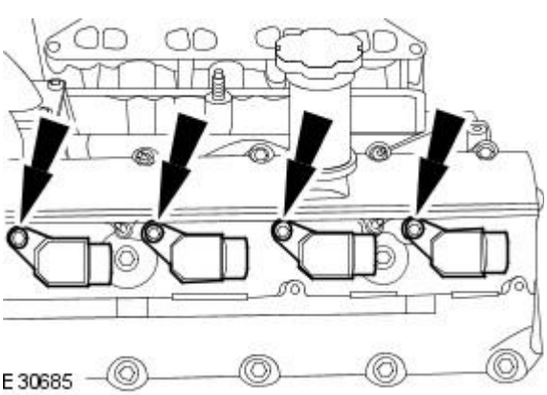

100. NOTE: Left hand shown, right hand similar.

Remove the ignition coil-on-plug

101. Remove the spark plugs.

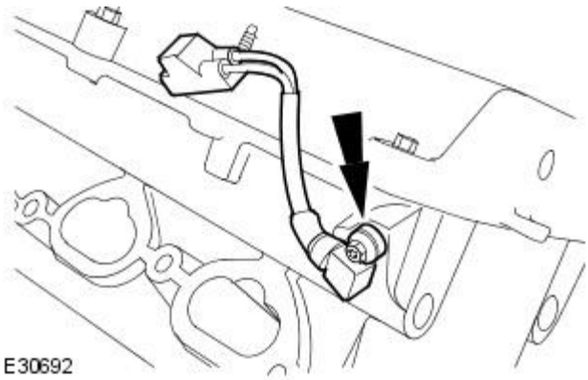

102. Remove the right-hand camshaft position (CMP) sensor.

- Remove and discard the O-ring seal.

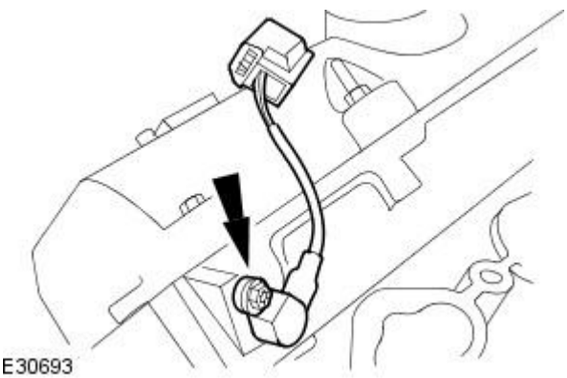

103. Remove the left-hand camshaft position (CMP) sensor.

- Remove and discard the O-ring seal.

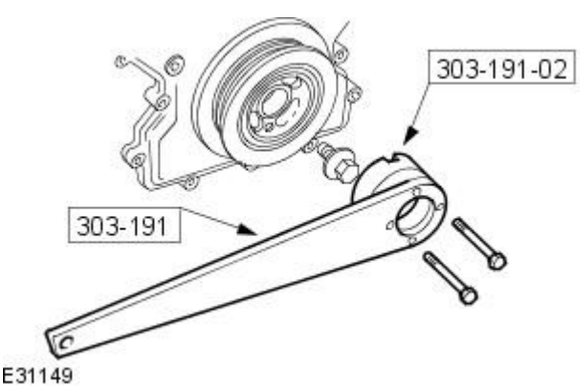

104. CAUTION: Under no circumstances should the crankshaft setting peg 303645 be used in the following operations to lock the crankshaft.

• NOTE: The crankshaft retaining bolt will be very tight.

Using special tools, retain the crankshaft pulley.

- Remove and discard the crankshaft pulley bolt.

105. Remove the special tools.

106. NOTE: The crankshaft pulley will be very tight.

Using special tools, remove the crankshaft pulley.

- Collect the locking ring.
- Remove and discard the O-ring seal.

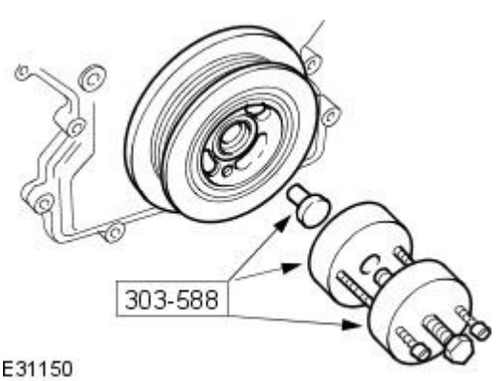

107. Remove the special tools.

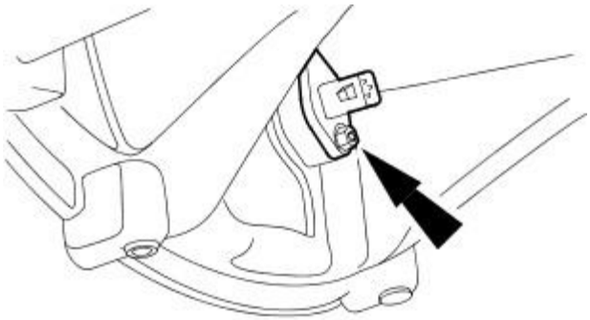

E30694

108. Remove the crankshaft position (CKP) sensor.

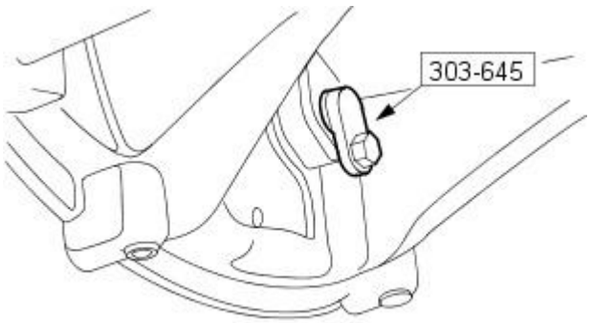

VUJ0002400

109. CAUTIONS:

Make sure the spark plugs are removed to enable the engine to rotate freely.

Do not rotate the crankshaft counterclockwise. The timing chains may bind causing engine damage.

Rotate the crankshaft clockwise to position the engine to top dead center (TDC) No. 1 cylinder

Install the special tool 303-645.

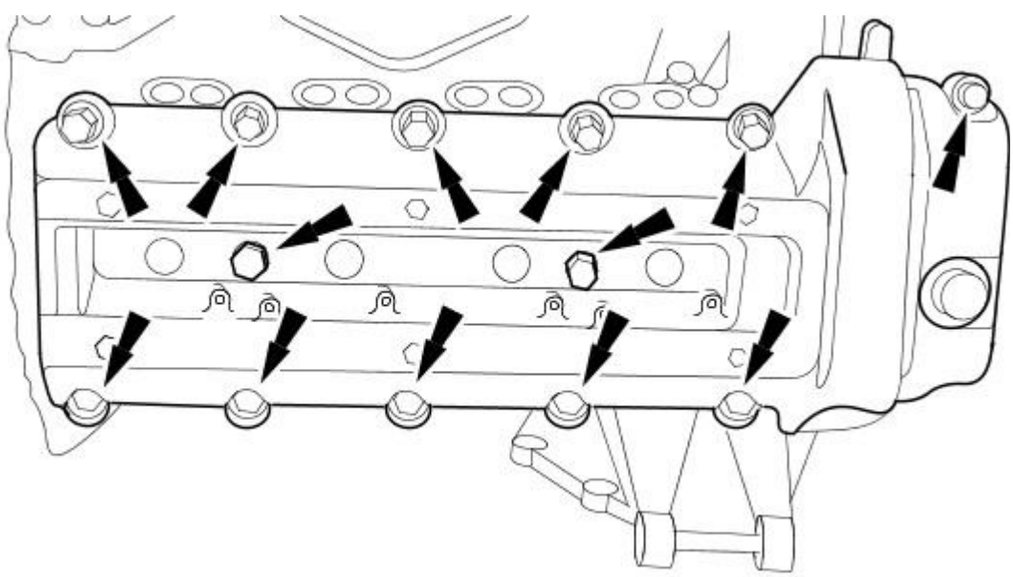

VUJ0002395

110. Remove the right-hand valve cover.

- Discard the valve cover gaskets.

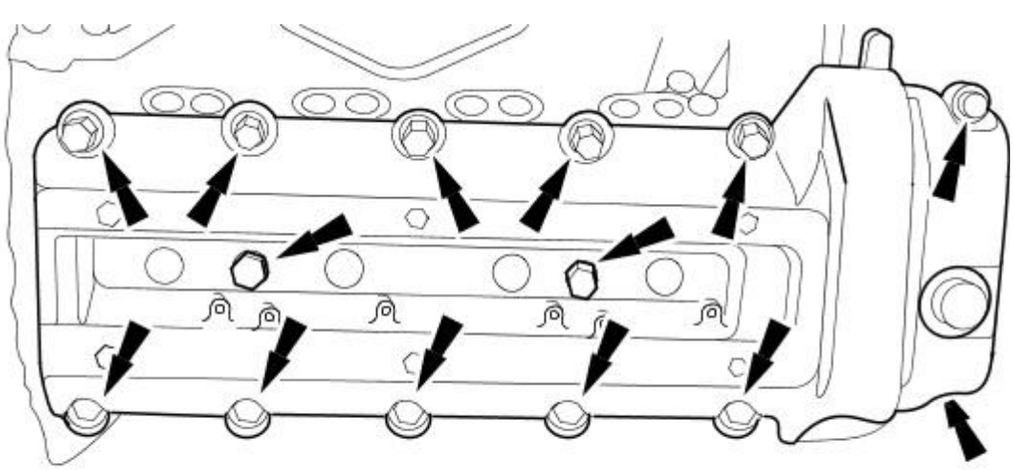

E30696

111. Remove the left-hand valve cover.

- Discard the valve cover gaskets.

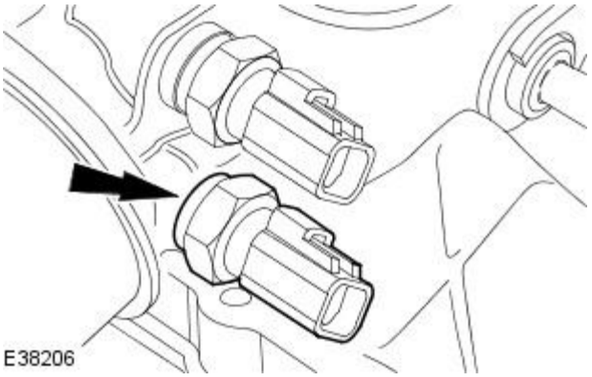

112. Remove the oil pressure sensor.

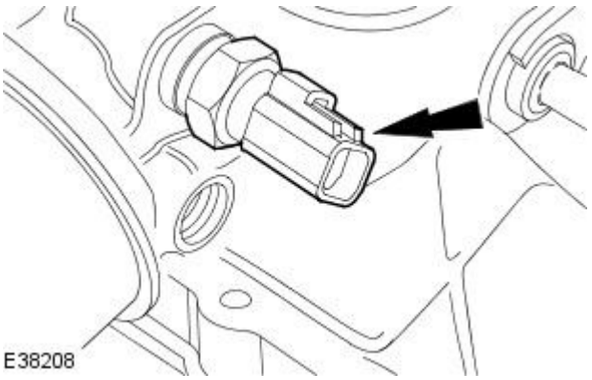

113. Remove the oil temperature sensor.

114. Remove the engine front cover.

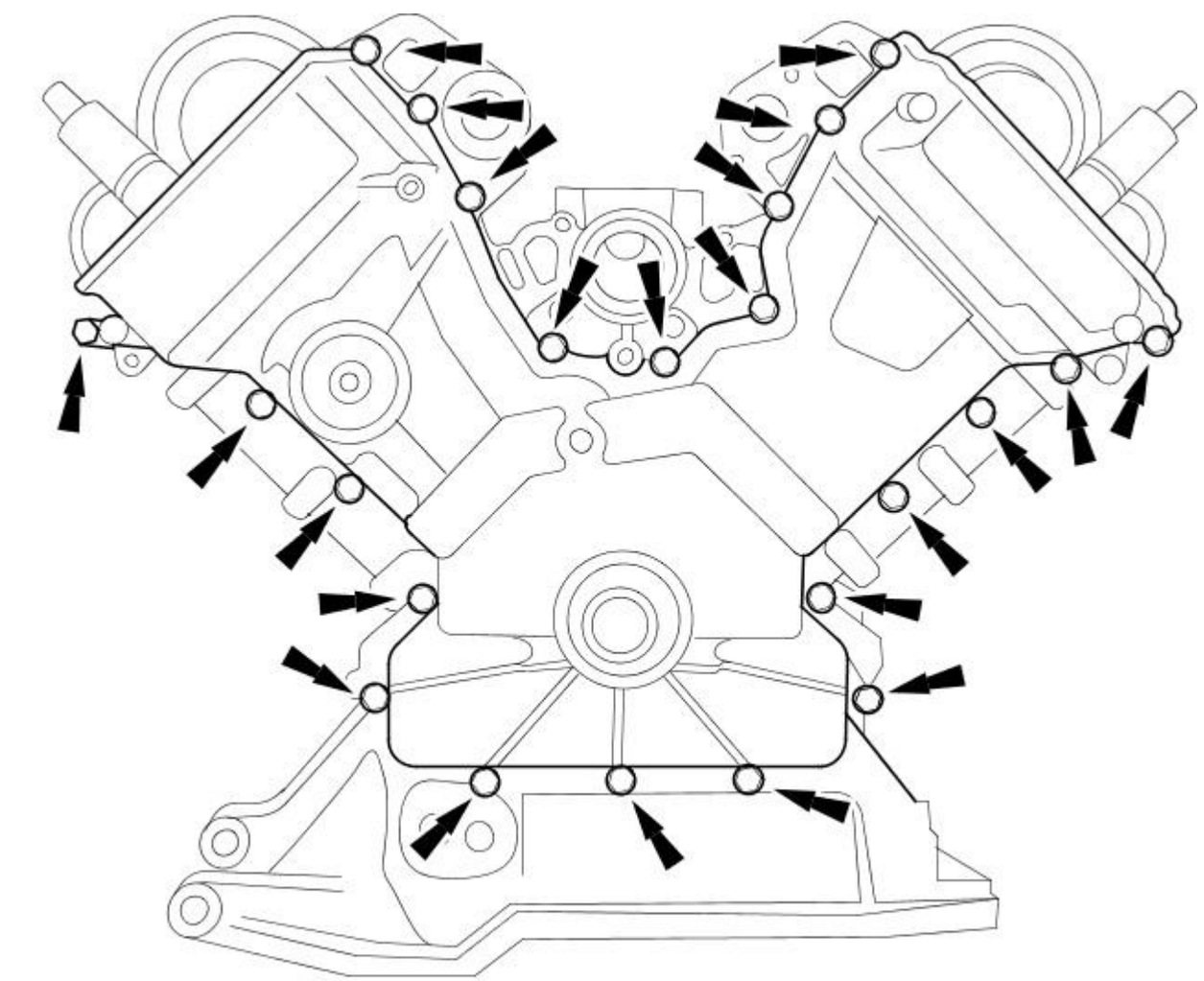

VUJ0002398

Vehicles without supercharger

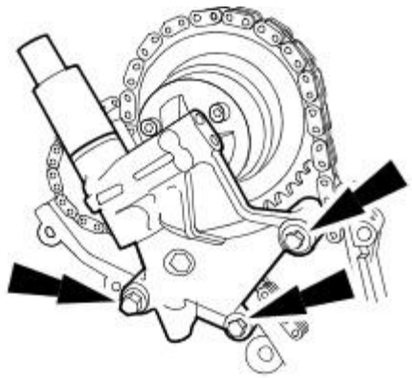
E30699

115. Remove the right-hand variable camshaft timing oil control unit housing.

- Remove and discard the O-ring seals.

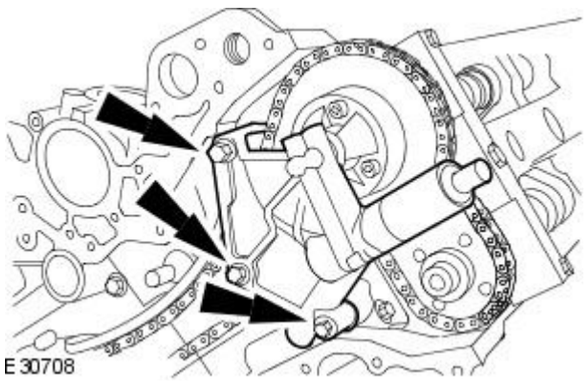
E30708

116. Remove the left-hand variable camshaft timing oil control unit housing.

- Remove and discard the O-ring seals.

All vehicles

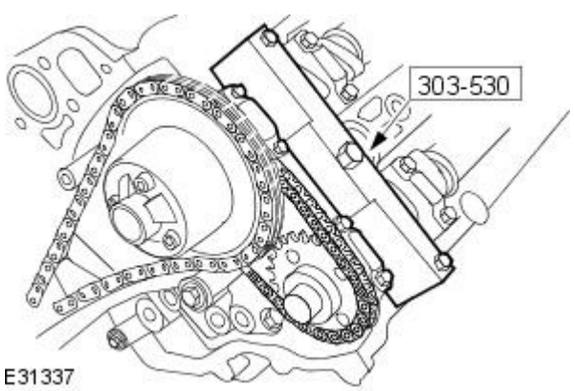

E31337

117. Install the special tool to the left-hand cylinder head.

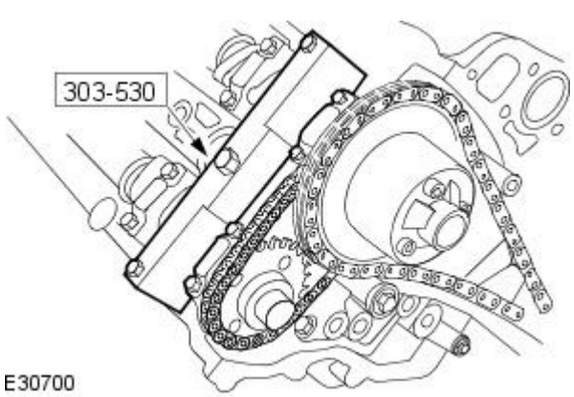

E30700

118. Install the special tool to the Right-hand cylinder head.

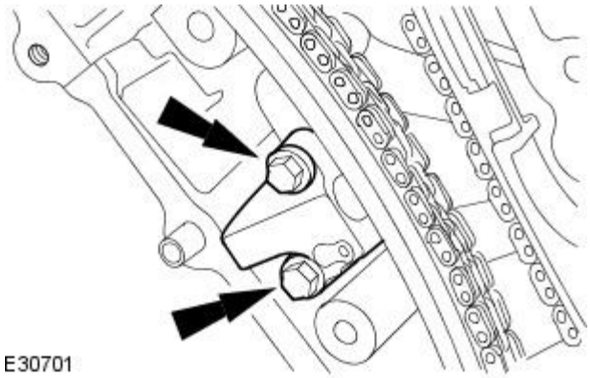

E30701

119. Remove the primary timing chain tensioner assembly.

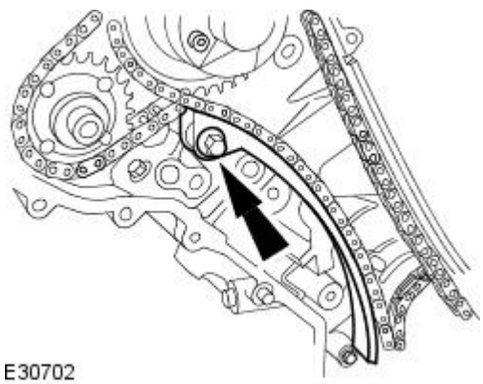

E30702

120. Remove the primary timing chain tensioner guide.

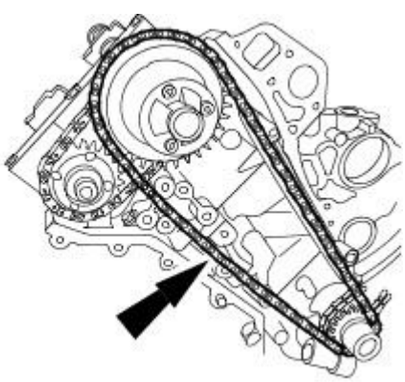

E30703

121. Remove the primary timing chain.

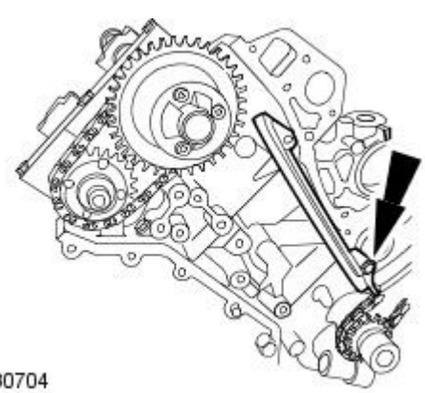

E30704

122. Remove the primary timing chain guide.

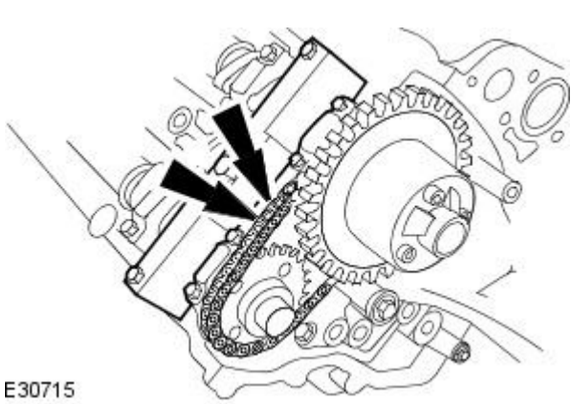

E30715

123. Remove the secondary timing chain tensioner retaining bolts.

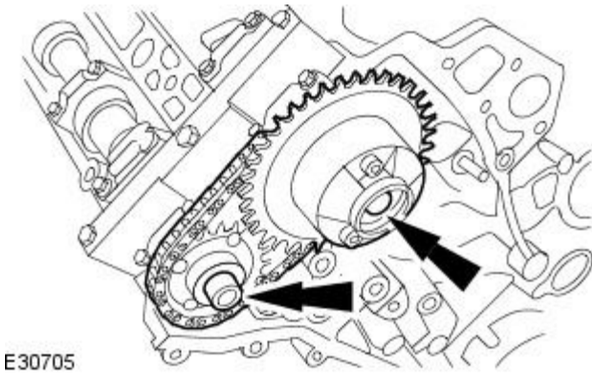

124. Remove the camshaft sprockets.

- Remove the secondary timing chain tensioner and secondary timing chain from the camshaft sprockets.

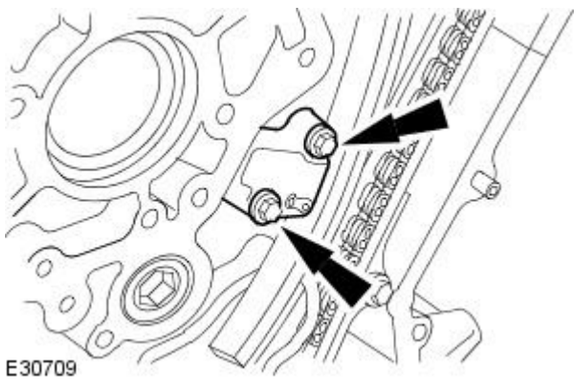

125. Remove the primary timing chain tensioner assembly.

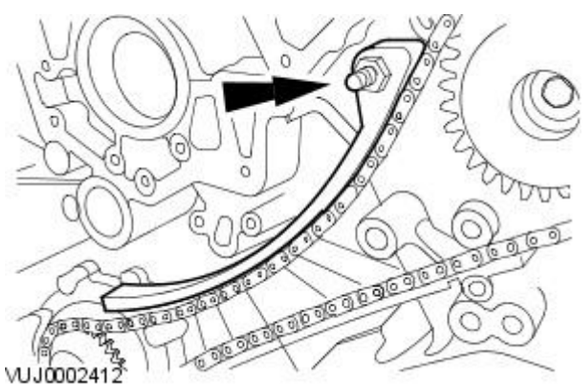

126. Remove the primary timing chain tensioner guide.

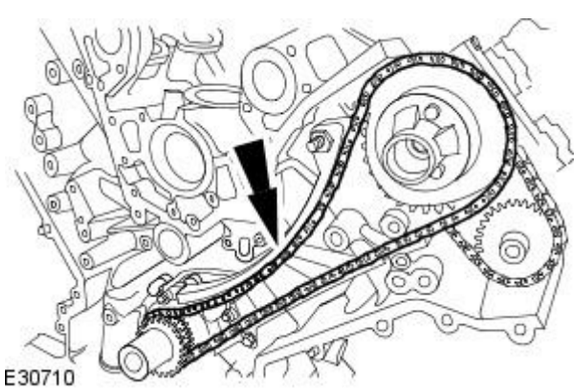

127. Remove the primary timing chain.

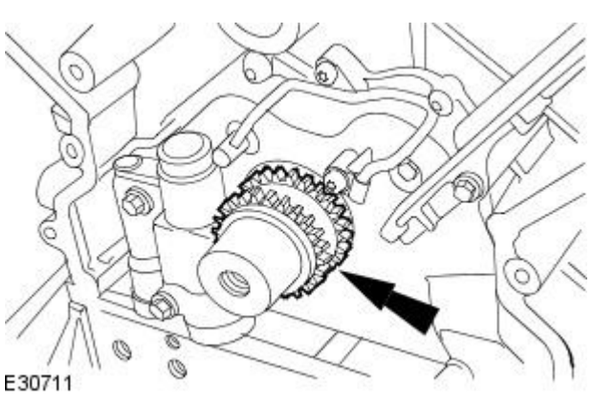

128. Remove the crankshaft sprocket.

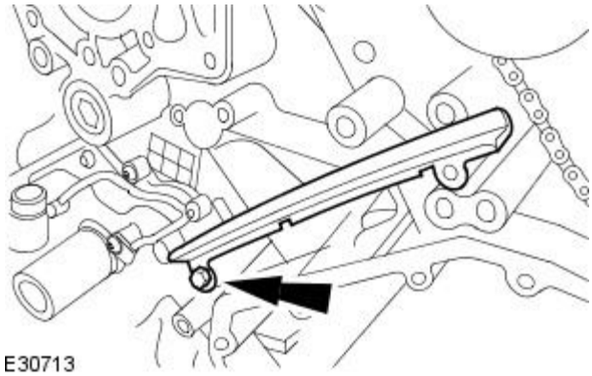

129. Remove the primary timing chain tensioner guide.

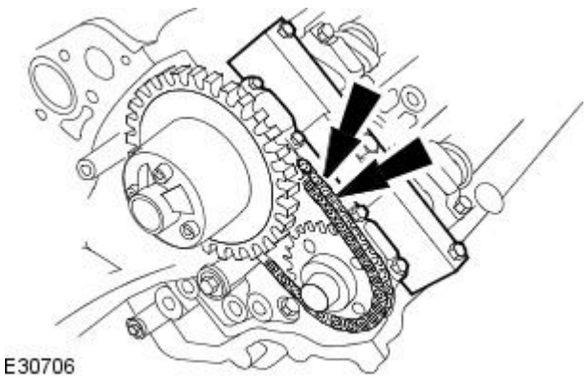

130. Remove the secondary timing chain tensioner retaining bolts.

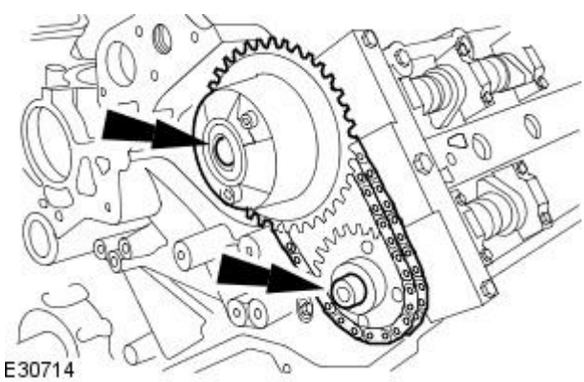

131. Remove the camshaft sprockets.

- Remove the secondary timing chain tensioner and secondary timing chain from the camshaft sprockets.

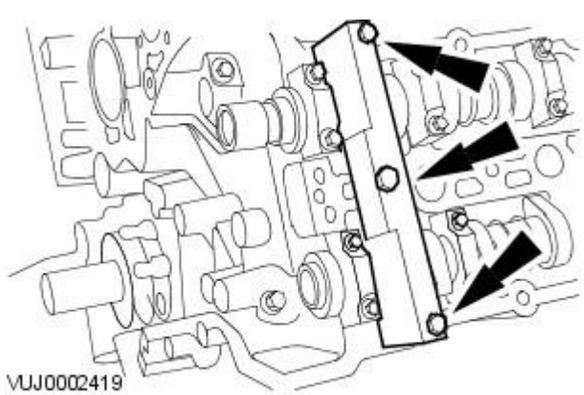

132. Remove the camshaft setting tool.

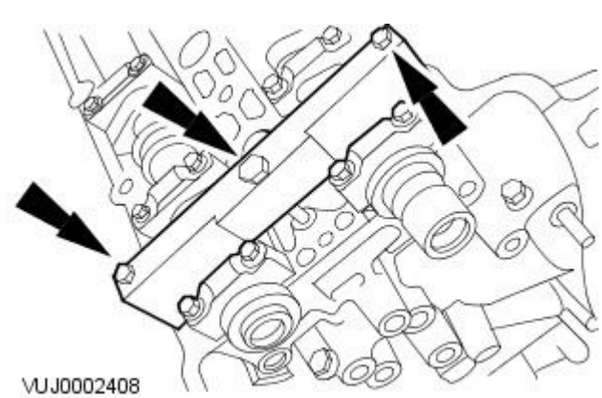

133. Remove the camshaft setting tool.

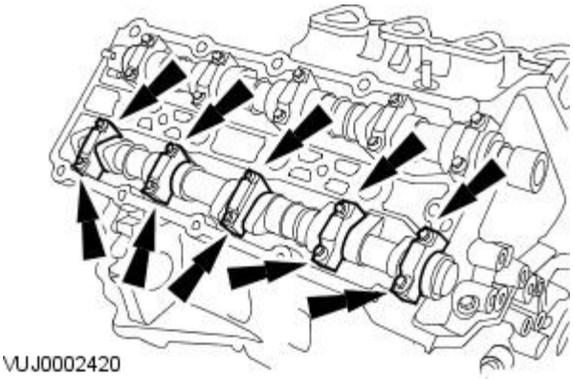

134. Remove the camshaft bearing caps.

- Remove the camshaft bearing cap retaining bolts evenly and in stages.
- Remove the camshaft bearing caps. Note their orientation and markings, each is marked with its position (a number) and orientation (an arrow).

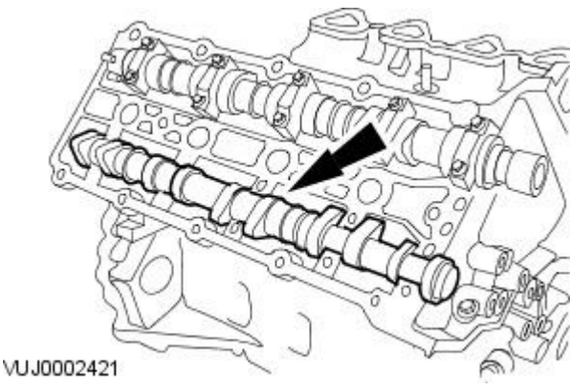

135. Remove the right-hand exhaust camshaft.

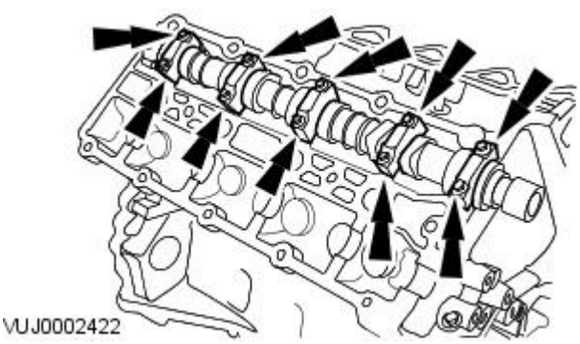

136. Remove the camshaft bearing caps.

- Remove the camshaft bearing cap retaining bolts evenly and in stages.
- Remove the camshaft bearing caps. Note their orientation and markings, each is marked with its position (a number) and orientation (an arrow).

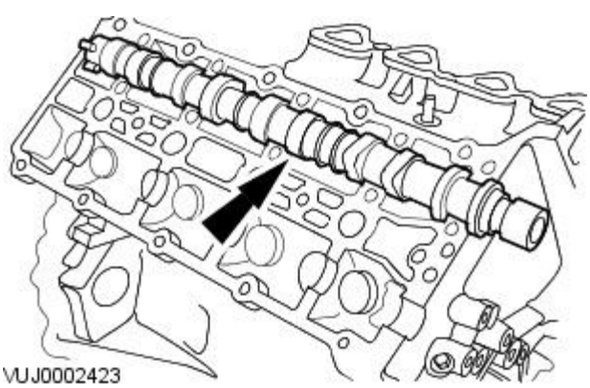

137. Remove the right-hand intake camshaft.

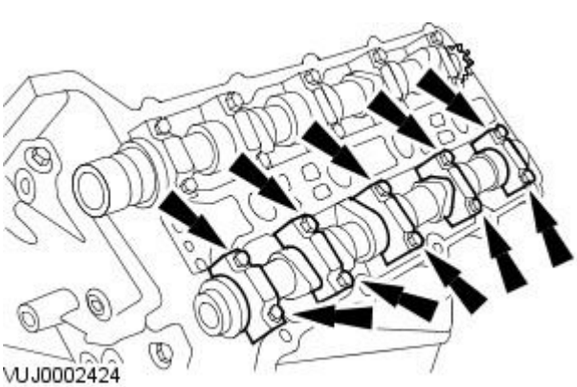

138. Remove the camshaft bearing caps.

- Remove the camshaft bearing cap retaining bolts evenly and in stages.
- Remove the camshaft bearing caps. Note their orientation and markings, each is marked with its position (a number) and orientation (an arrow).

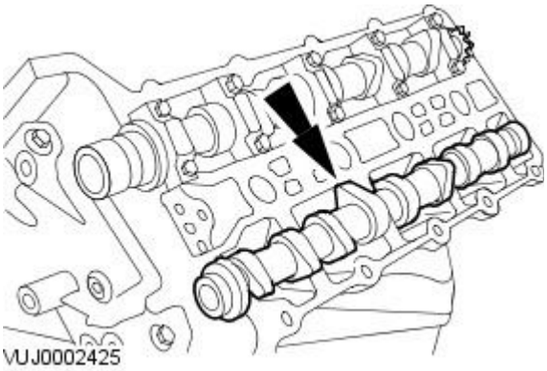

139. Remove the left-hand exhaust camshaft.

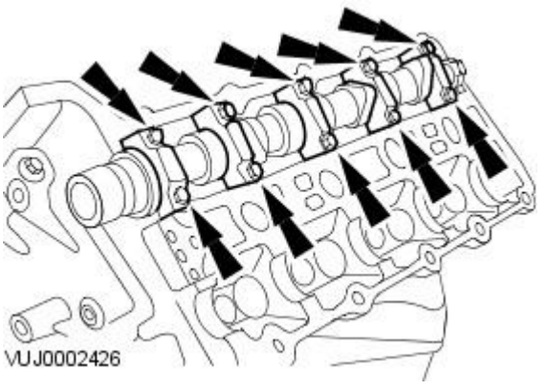

140. Remove the camshaft bearing caps.

- Remove the camshaft bearing cap retaining bolts evenly and in stages.
- Remove the camshaft bearing caps. Note their orientation and markings, each is marked with its position (a number) and orientation (an arrow).

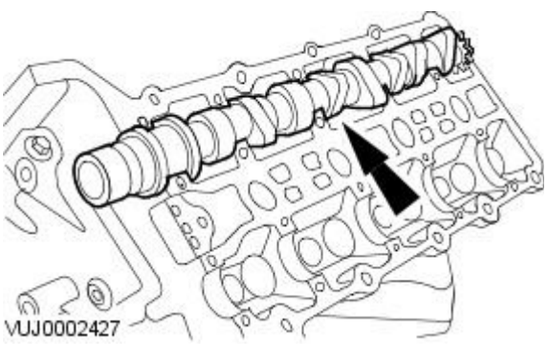

141. Remove the left-hand inlet camshaft.

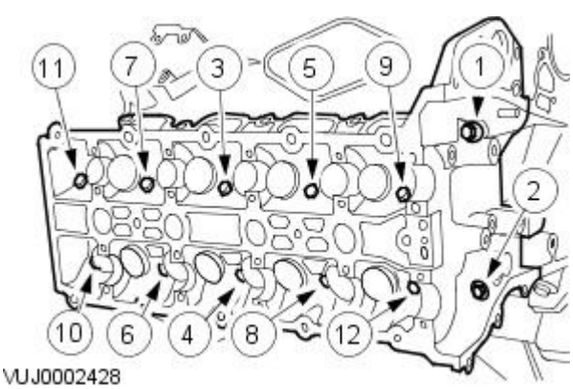

142. Remove the right-hand cylinder head.

- Remove the bolts in the indicated sequence.
- Remove and discard the gasket.

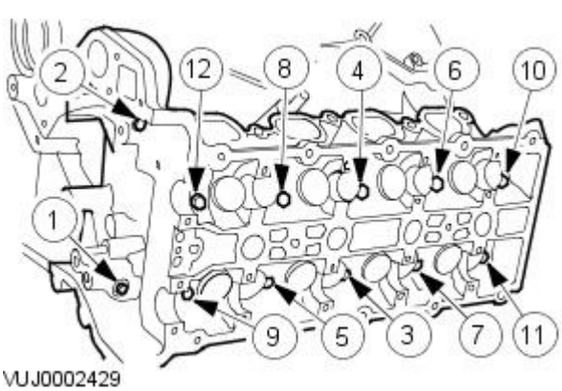

143. Remove the left-hand cylinder head.

- Remove the bolts in the indicated sequence.
- Remove and discard the gasket.

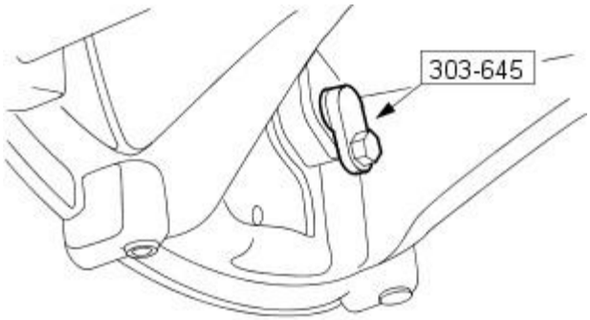

VUJ0002400

144. Remove the crankshaft setting peg 303645 from the crankshaft position sensor location.

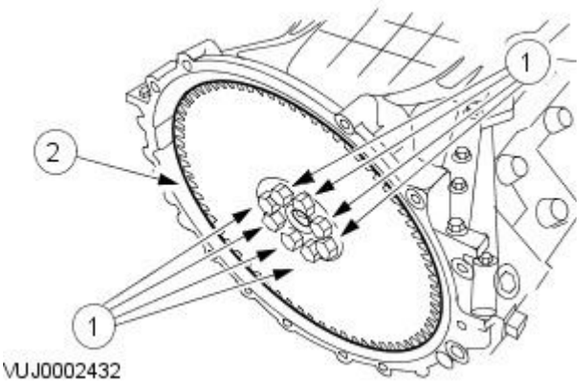

VUJ0002432

145. Remove the drive plate.

1. Remove the drive plate retaining bolts.
2. Remove the drive plate.

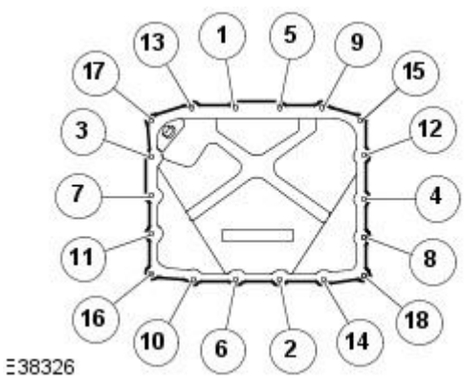

E38326

146. Remove the lower oil pan.

- Remove and discard the gasket.

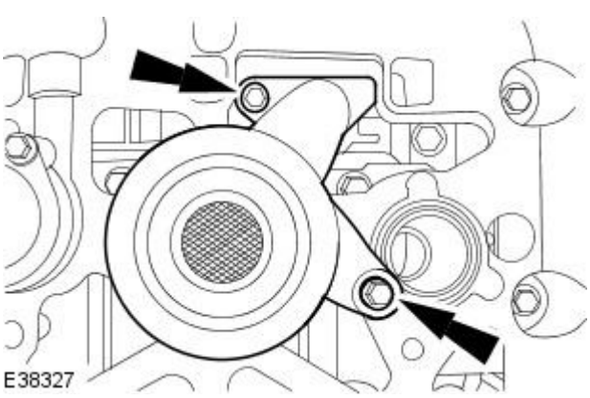

E38327

147. Remove the oil strainer.

- Remove and discard the O-ring seal.

148. Remove the upper oil pan.

- Remove and discard the gasket.

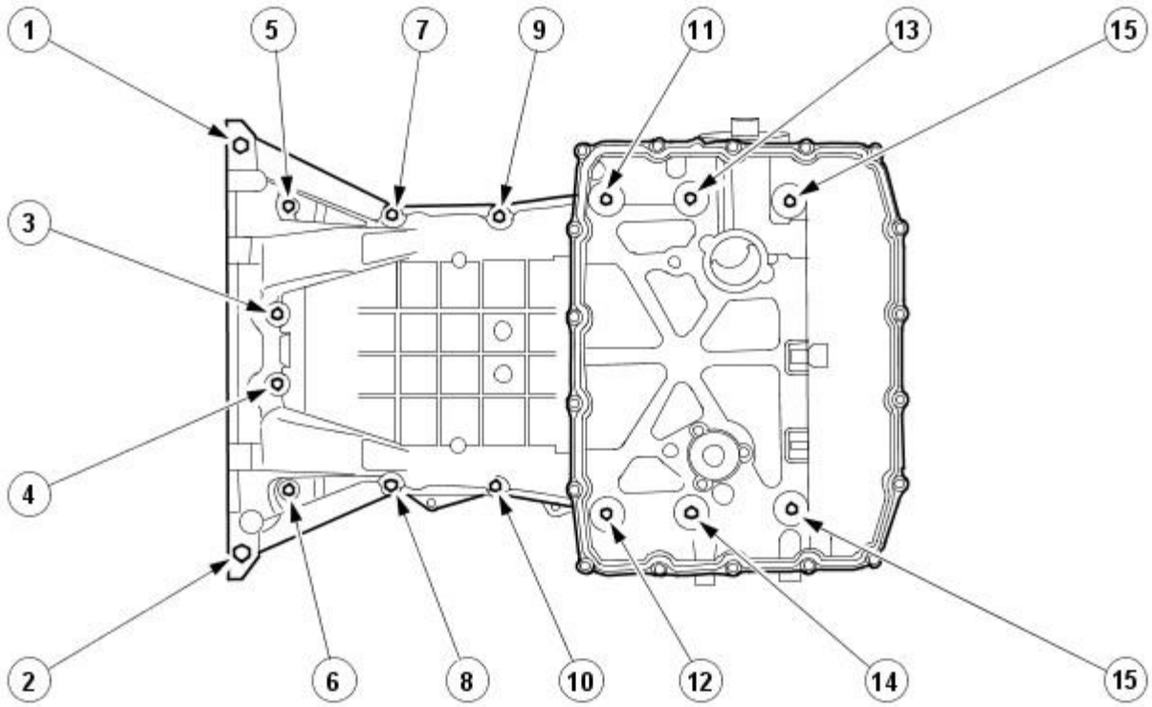

E38325

149. Remove the oil pump.

- Remove and discard the gasket.

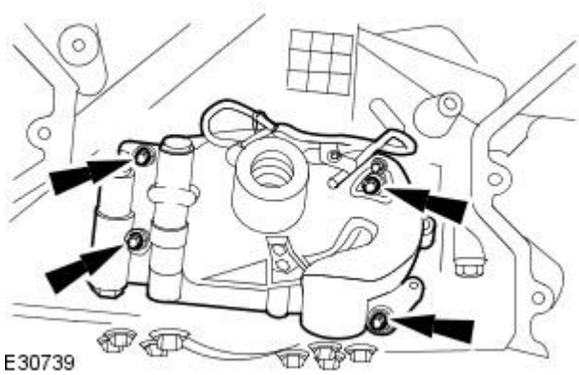

E30739

150. Inspect the tops of the cylinder bores. As necessary remove ridge and carbon build up from each cylinder.

Vehicles with supercharger

151. Remove the piston cooling jets.

All vehicles

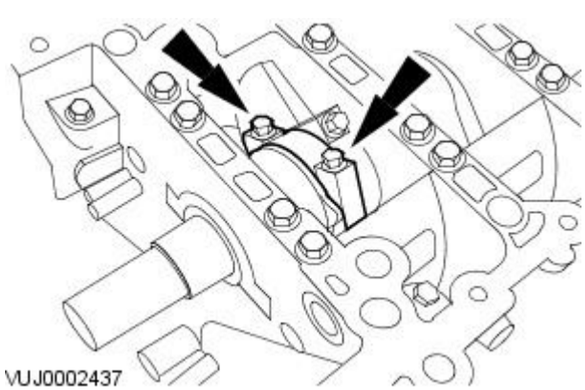

VUJ0002437

152. CAUTION: Pistons, connecting rods and connecting rod bearings should be numbered to make sure they are reassembled in the same position.

• NOTE: Mark the position of the connecting rod caps to the connecting rods to make sure of correct installation.

• NOTE: Discard the connecting rod bolts after removal.

Remove the connecting rod bolts, the connecting rod caps and the lower connecting rod bearings.

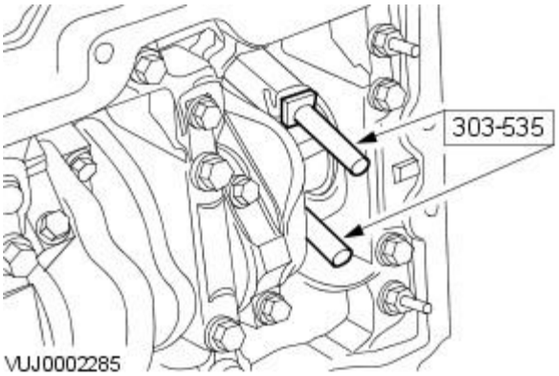

153. CAUTION: Use appropriate protection to prevent damage to the crankshaft bearing journals and cylinder bore surfaces.

Install special tools to the connecting rods.

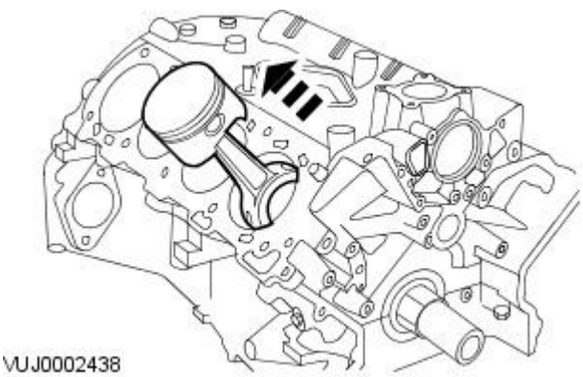

154. CAUTION: Care should be taken not to damage the connecting rod and cap joint face surfaces or possible engine damage may occur. Avoid contaminating the fractured joint surfaces with dirt or grease.

• NOTE: Attach the connecting rods and caps after removal to avoid mismatch.

Remove the pistons.

- Rotate the crankshaft to locate pistons at the bottom of travel.
- Push the piston, connecting rod and upper bearing through the top of the cylinder.

155. NOTE: Remove the lower cylinder block bolts in the indicated sequence.

• NOTE: Mark the position of the upper and lower crankshaft main bearings for reassembly.

Remove the lower cylinder block.

- Remove the lower cylinder block retaining bolts in the indicated sequence.

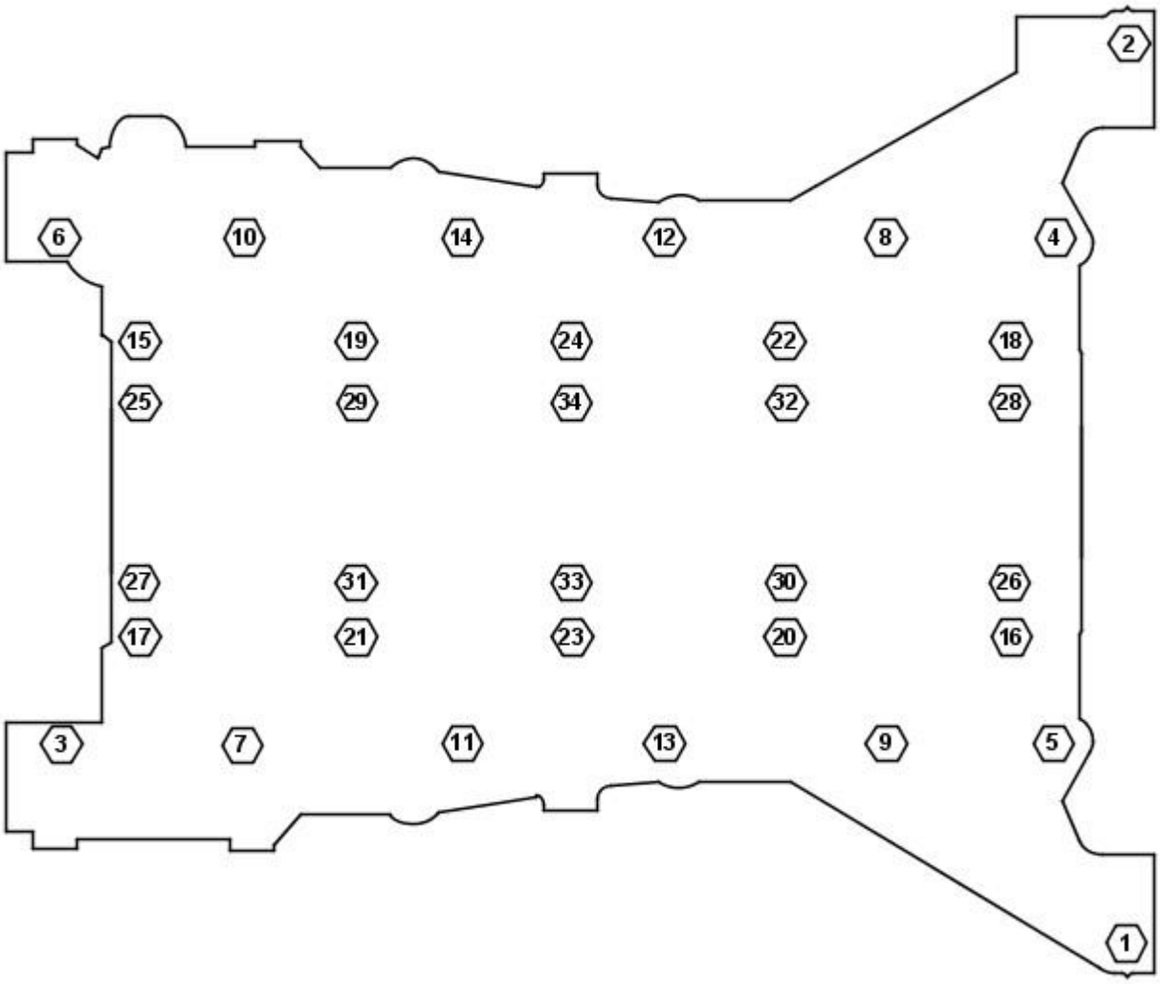

VUJ0002439

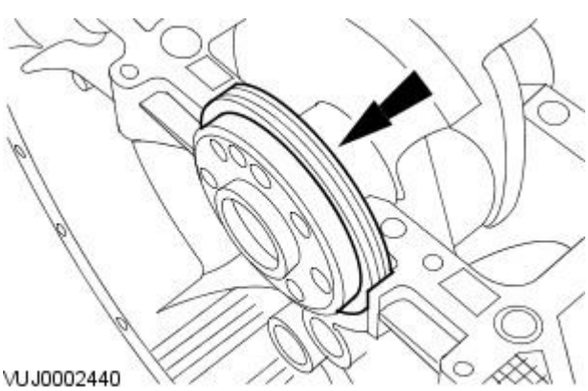

VUJ0002440

156. Discard the crankshaft rear main oil seal.

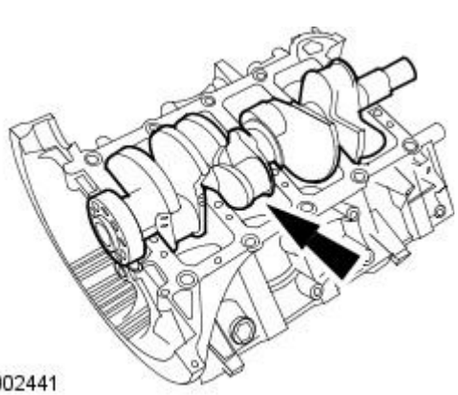

VUJ0002441

157. CAUTION: Avoid damage to any crankshaft bearing surfaces.

• NOTE: Never remove any pipe plugs or dowels unless they are to be newly installed or the cylinder block is to be washed.

Remove the crankshaft.

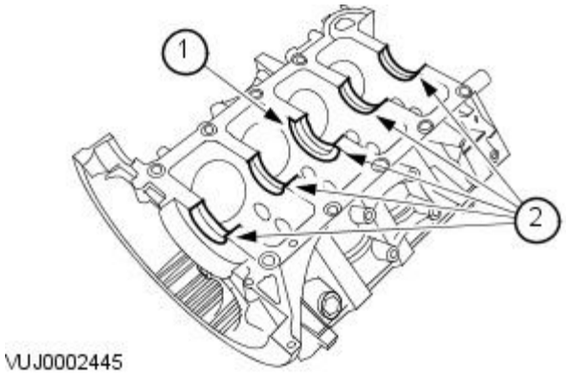

158. Remove the upper crankshaft main bearings.

1. Remove the upper crankshaft thrust washers.
2. Remove the upper crankshaft main bearings.

159. Clean the cylinder block with a soap and water solution. Dry the cylinder block completely with compressed air.

Engine - Cylinder Head

Disassembly and Assembly of Subassemblies

Special Tool(s)	
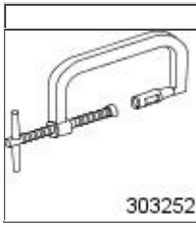 303252	Valve Spring Compressor 303-252

Disassembly

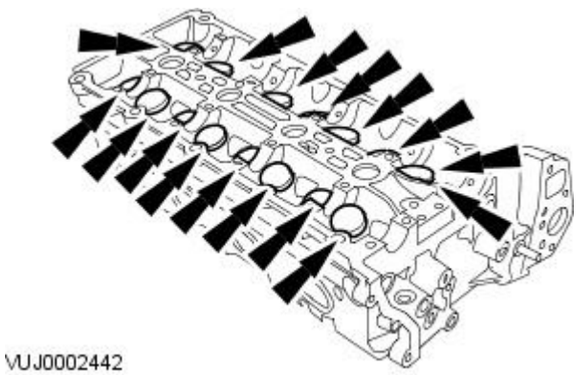

VUJ0002442

1. CAUTIONS:

Do not use a magnet to remove shims. Failure to follow these instructions may result in damage to the vehicle.

If the cylinder head valve components are to be reused, mark the position of the valve components to make sure they are reassembled in the same position.

Remove the bucket tappet and shim assemblies.

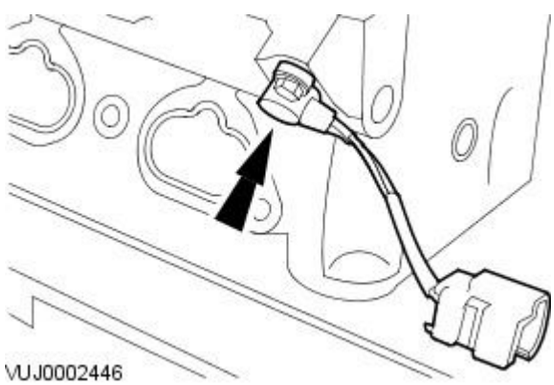

VUJ0002446

2. Remove the camshaft position (CMP) sensor.

- Remove and discard the 'O' ring seal.

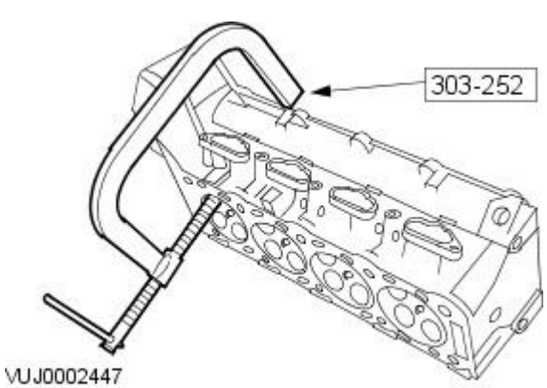

VUJ0002447

3. Using the special tool, compress the valve springs.

- Remove the valve collets.

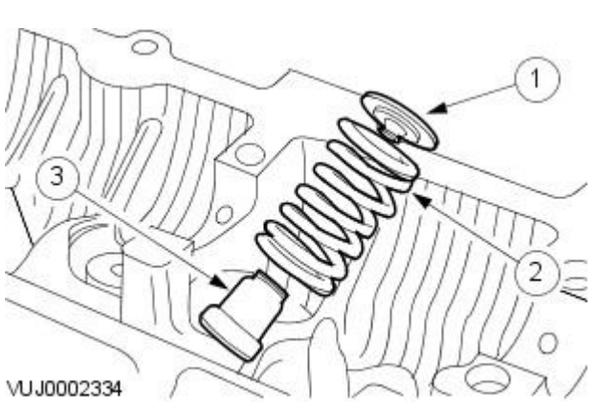

VUJ0002334

4. Remove the valve spring retainers and valve springs.

1. Remove the valve spring retainers.
2. Remove the valve springs.
3. Remove the valve stem oil seals.

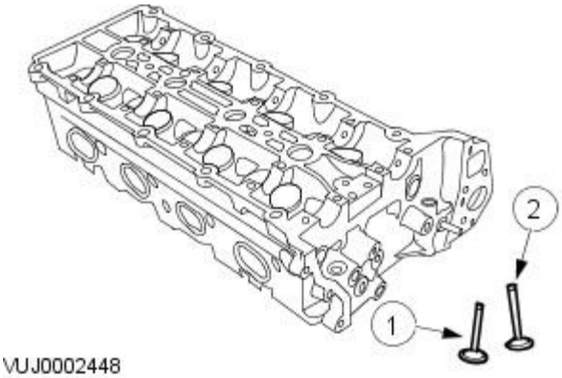

5. Remove the valves from the cylinder head.

1. Remove the intake valves.
2. Remove the exhaust valves.

6. Inspect the cylinder heads and related components. For additional information, refer to Section 303-00 Engine System - General Information

7. Remove the pipe plugs and alignment dowels as necessary to clean the cylinder heads.

Assembly

1. WARNING: Eye protection is required during use of compressed air. Failure to follow these instructions may result in personal injury.

CAUTION: The cylinder head surface finish is measured in microns. For correct head gasket sealing, avoid any contact of finish with metallic objects.

Clean gasket material, dirt and foreign material from cylinder heads. Wash with a suitable soap and water solution and dry the cylinder head completely using compressed air if pipe plugs have been removed.

2. Install the pipe plugs and alignment dowels to cylinder heads.

- Apply pipe sealant to plugs prior to installation.

3. NOTE: Lubricate the valve stems before assembly.

Install the valves into the cylinder heads.

1. Install the intake valves.
2. Install the exhaust valves.

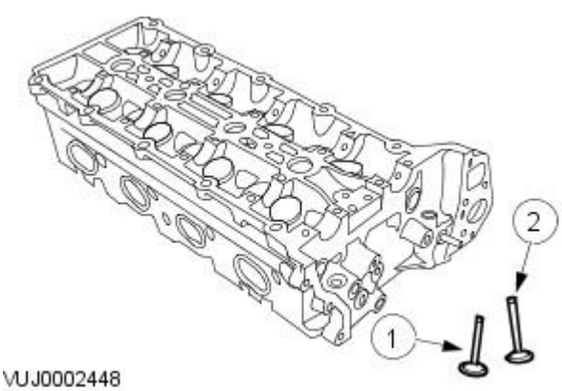

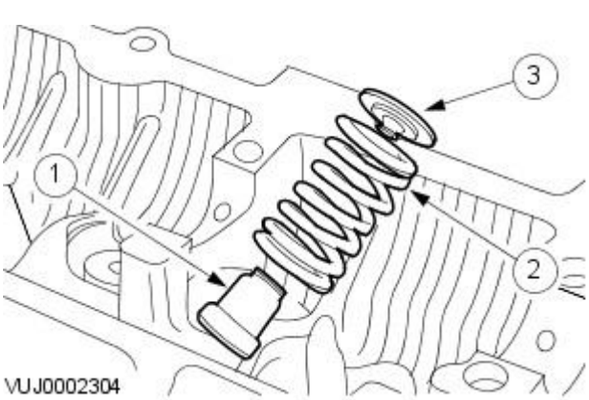

4. Install the valve spring retainers and valve springs.

1. Install the valve stem oil seals.
2. Install the valve springs.
3. Install the valve spring retainers.

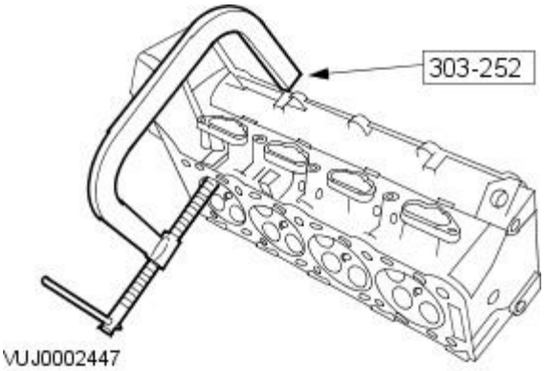

5. Using the special tool, compress the valve springs.

- Install the valve collets.

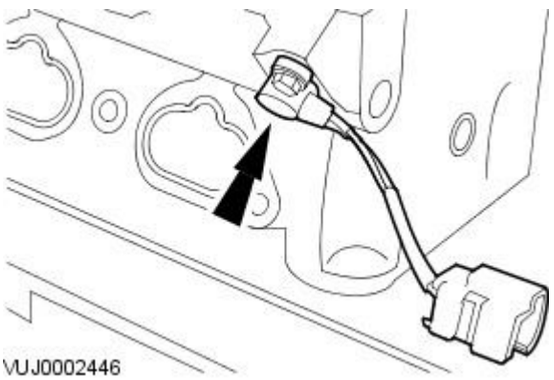

6. Install the camshaft position (CMP) sensor.

- Install a new 'O' ring seal.
- Tighten to 7 Nm.

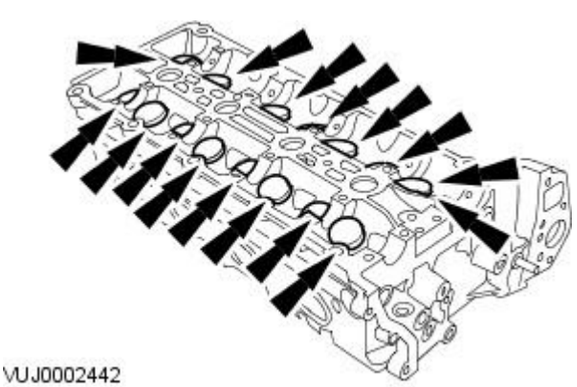

7. CAUTION: Do not use a magnet to install shims. Failure to follow these instructions may result in damage to the vehicle.

Install the bucket tappet and shim assemblies.

Engine - Engine

Assembly

Special Tool(s)	
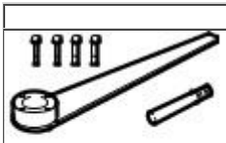 303-191	Crankshaft locking, main tool 303-191
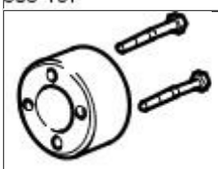 303-191-02	Adapter 303-191-02
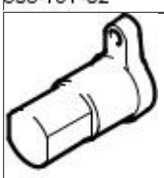 303-645	Crankshaft setting, main tool 303-645
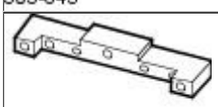 303-530	Camshaft setting 303-530
303-532	Timing chain tensioning tool 303-532
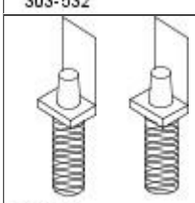 303535	Cylinder Bore Protectors 303-535
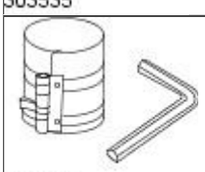 303372	Piston Ring Compressor 303-372
303-538	Crankshaft rear oil seal remover/replacer 303-538
303-750	Crankshaft front seal installer 303-538

Assembly

All vehicles

1. CAUTION: Use only a plastic scraper when removing old gasket material.

Clean all the mating faces and reusable parts thoroughly and check for damage.

- If gasket material remains on the cylinder head after cleaning, use a plastic tipped scraper to remove remaining material.

2. NOTE: Never remove pipe plugs or alignment dowels unless they are to be serviced.

Reseal oil passage blanking plugs, as necessary.

3. NOTE: The main bearings are precision selective fit.
For additional information, refer to Section 303-00 Engine System - General Information.

• NOTE: Lubricate the upper crankshaft main bearings and thrust washers.

Install the upper crankshaft main bearings.

1. Install the upper crankshaft thrust washers.
2. Install the upper crankshaft main bearings.

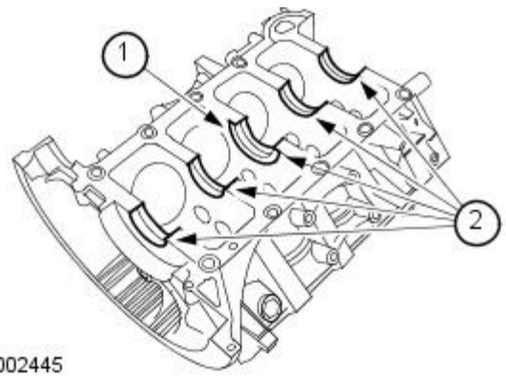

VUJ0002445

4. CAUTION: Avoid damage to any crankshaft bearing surfaces.

Install the crankshaft.

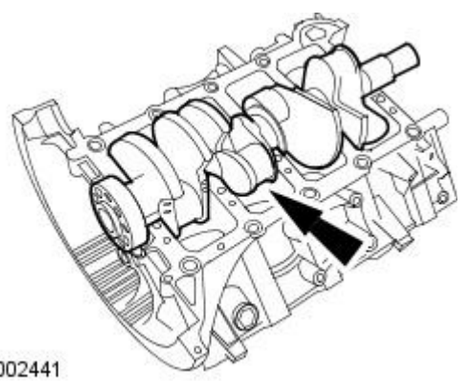
VUJ0002441

5. NOTE: The main bearings are precision selective fit.
For additional information, refer to Section 303-00 Engine System - General Information.

• NOTE: Install lower cylinder block and tighten bolts to specification within twenty minutes of applying sealer.

Apply a bead of sealant to the cylinder block housing.

- Use WSS-M4G320-A3-RTV sealant.

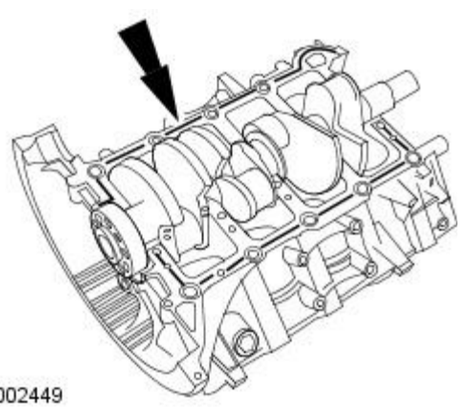
VUJ0002449

6. CAUTION: Make sure all dowels are fully seated into lower cylinder block prior to tightening the bolts.

• NOTE: Do not lubricate the lower cylinder block bolts.

• NOTE: Do not rotate crankshaft until all bolts are tightened to specification.

• NOTE: Bolts must be tightened within twenty minutes of applying sealer.

• NOTE: Tighten the bolts in the sequence shown.

Install the lower cylinder block to the upper cylinder block.

1. Tighten bolts 21 to 32 to 15 Nm
2. Tighten bolts 33 to 34 to 15 Nm
3. Tighten bolts 1 to 10 to 25 Nm
4. Tighten bolts 11 to 20 to 15 Nm
5. Tighten bolts 1 to 10 to 35 Nm +135°
6. Tighten bolts 11 to 20 to 20 Nm +150°
7. Tighten bolts 21 to 32 to 20 Nm +90°

8. Tighten bolts 33 to 34 to 20 Nm +150°

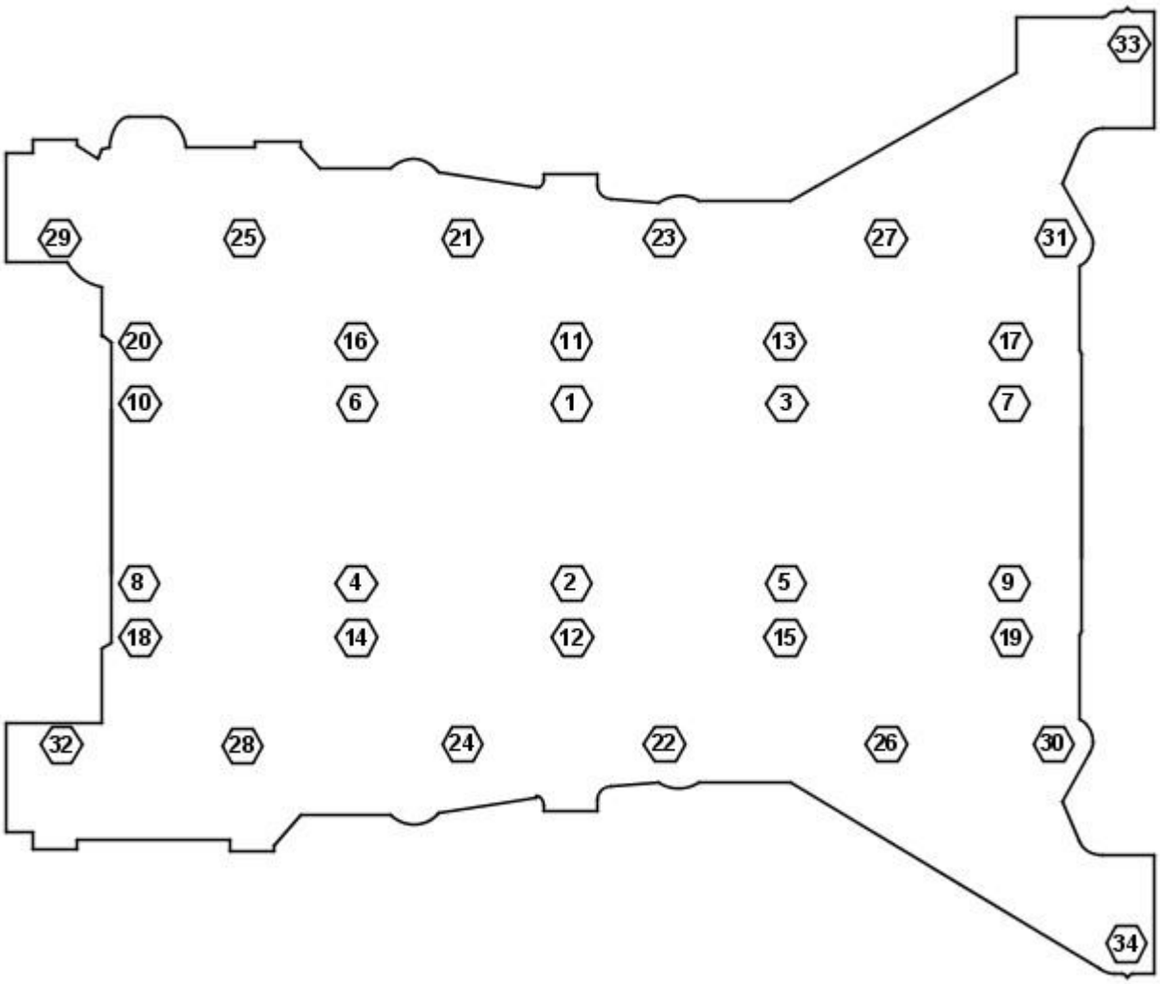

VUJ0002450

7. Rotate the crankshaft to check correct operation.
8. Remove excess sealant which may squeeze out at the sealing surfaces.
9. NOTE: Make sure all components are clean and dry.

   Make sure the transit sleeve is correctly in place and install the new seal over the crankshaft. Do not use any lubricant on the seal, the transit sleeve or the crankshaft.
10. Carefully remove the transit sleeve, leaving the seal in place.
11. Install the special tool to the crankshaft.

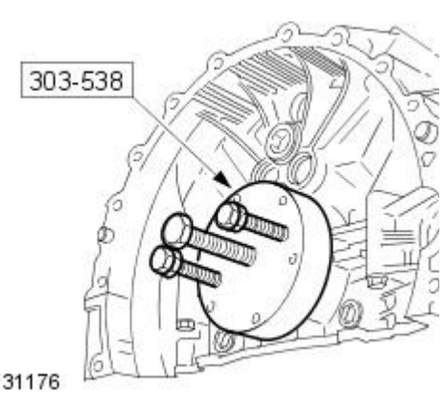

E31176

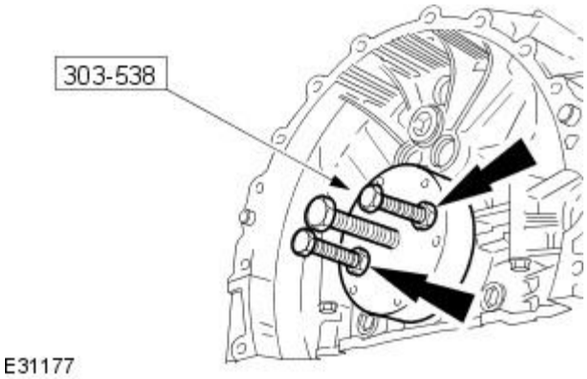

12. Reposition the nuts to hold the special tool against the crankshaft rear seal. Check that the crankshaft rear seal and the special tool are parallel to the rear of the engine.

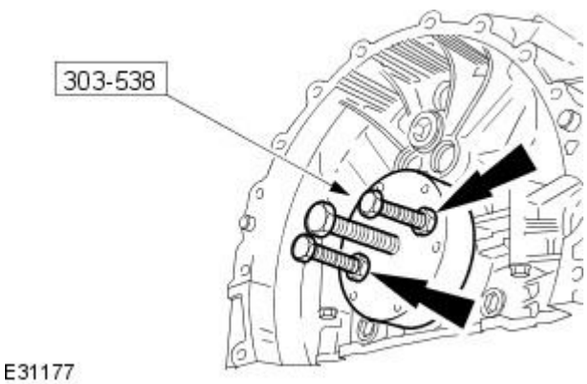

13. CAUTION: Alternate nut tightening to correctly seat the crankshaft rear seal.

Using the special tool, install the crankshaft rear seal.

14. Remove the special tool from the crankshaft.

- Check that the seal is located correctly.

15. CAUTION: Use appropriate protection to prevent damage to the crankshaft bearing journals and cylinder bore surfaces.

Install the special tools to the connecting rods.

- Position the crankshaft journal at the bottom of the stroke.
- Make sure the piston rings are positioned at different positions opposite the thrust side of the piston before installation.

16. NOTE: Install pistons with arrow to front of engine.

Using the special tool compress the rings and install the piston and connecting rod.

- Lubricate all piston components.

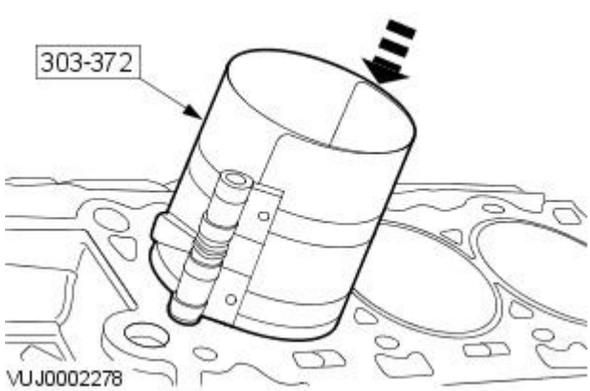

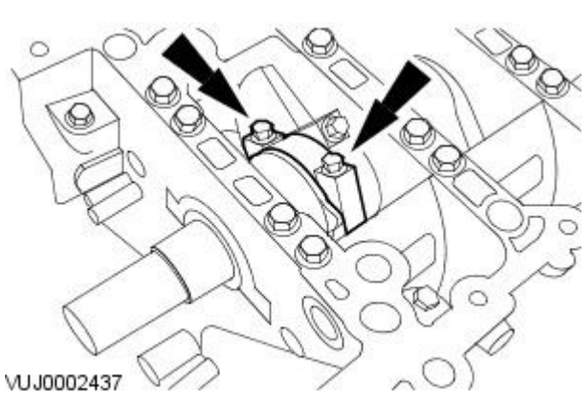

17. CAUTIONS:

When assembling the connecting rods and connecting rod caps it is imperative that bearing slots and tangs be located on the same side of the connecting rods.

Connecting rod bolts are torqued to yield and must be replaced.

Bolts must be tightened equally.

• NOTE: Remove the special tools from the connecting rods.

Position the connecting rod cap on the appropriate connecting rod.

1. Tighten to 10 Nm
2. Tighten to 30 Nm

3. Tighten to 90°

18. Rotate the crankshaft to check correct operation.

Vehicles with supercharger

19. Install the piston cooling jets.

- Tighten to 9 Nm

All vehicles

20. Install the oil pump.

- Install a new gasket.
- Tighten to 12 Nm.

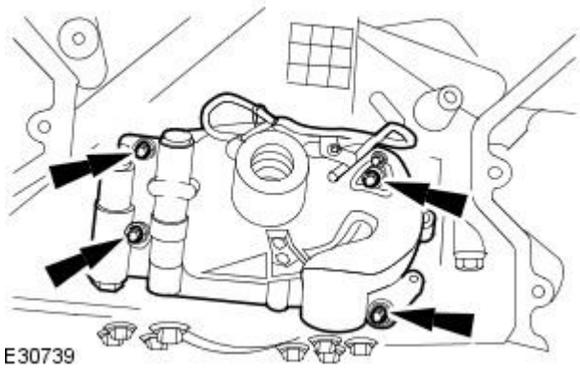

21. Install the upper oil pan.

- Install a new gasket.
- Tighten to 21 Nm.

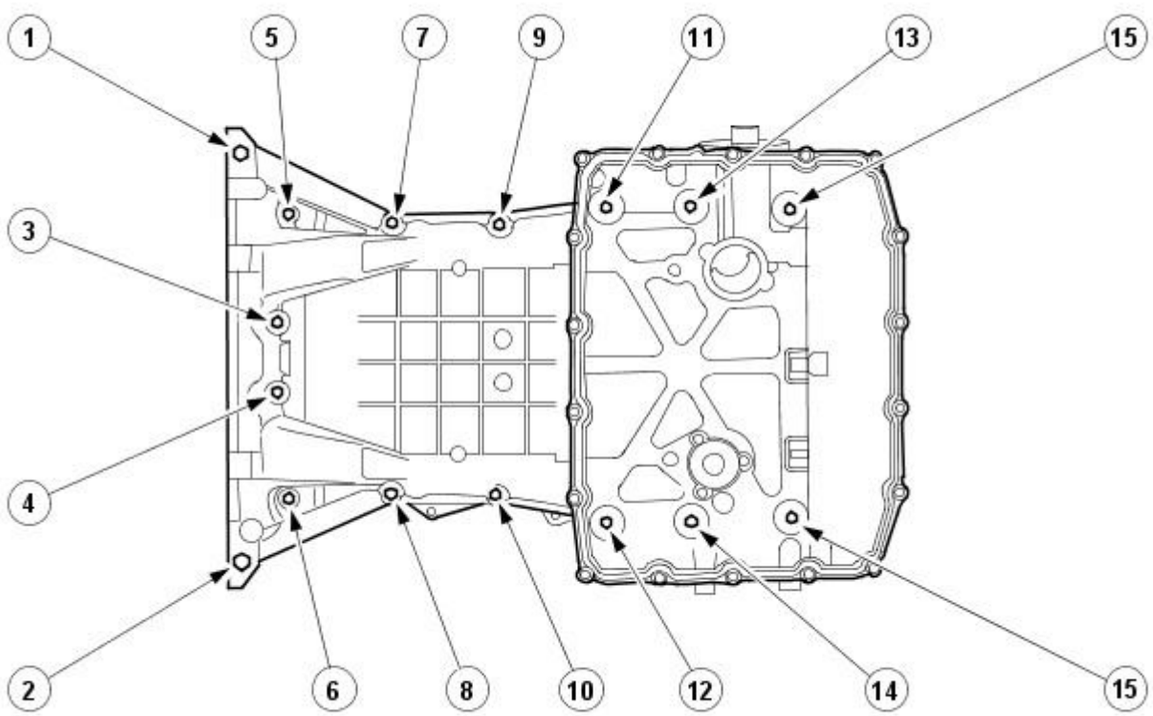

22. Install the oil strainer.

- Install a new O-ring seal.
- Tighten to 12 Nm.

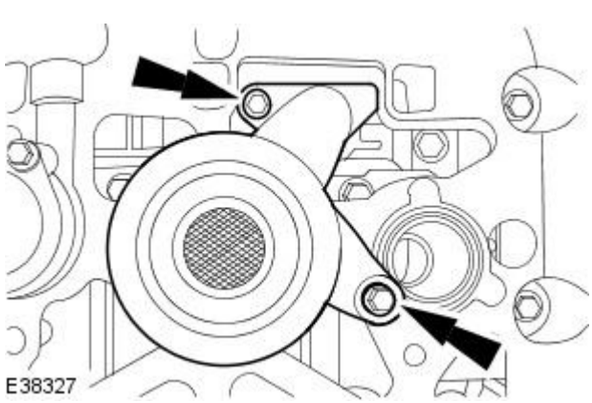

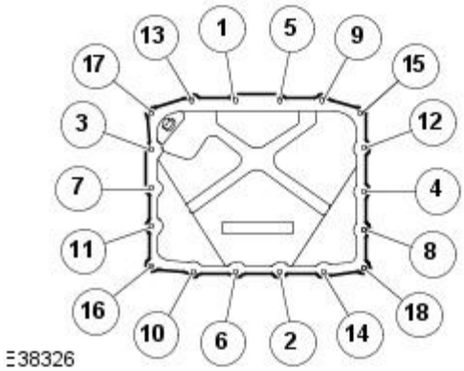

E38326

23. Install the lower oil pan.

- Install a new gasket.
- Tighten to 12 Nm.

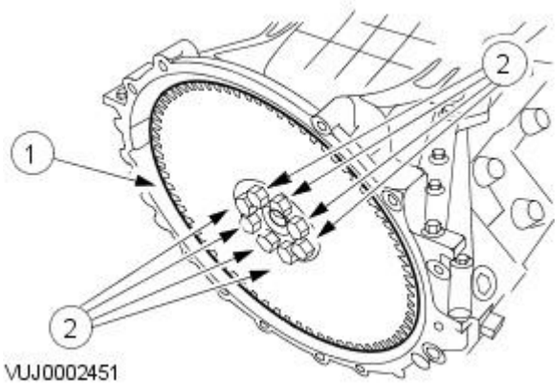

VUJ0002451

24. Install the drive plate.

1. Install the drive plate.
2. Install the drive plate retaining bolts.

- Tighten to 15 Nm.
- Tighten to 110 Nm.

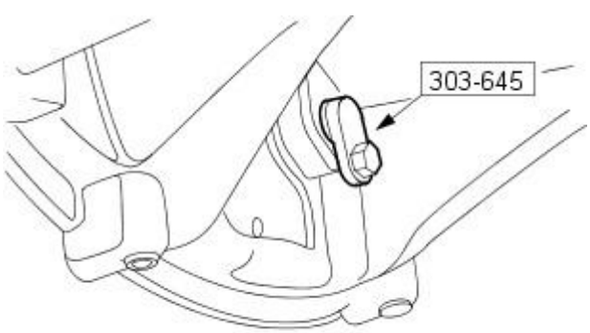

VUJ0002400

25. Reposition the crankshaft.

- Install the crankshaft setting peg 303645 to the crankshaft position sensor location.

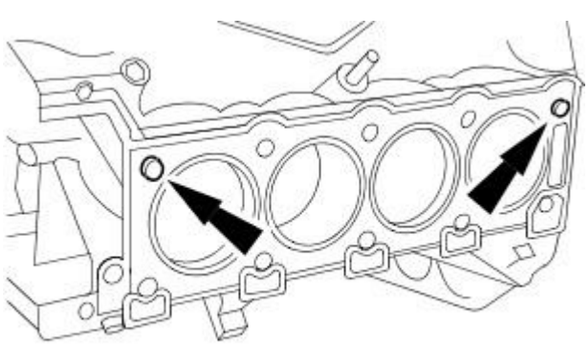
E31267

26. Install a new left-hand cylinder head gasket.

- Make sure the cylinder head dowels are correctly located.

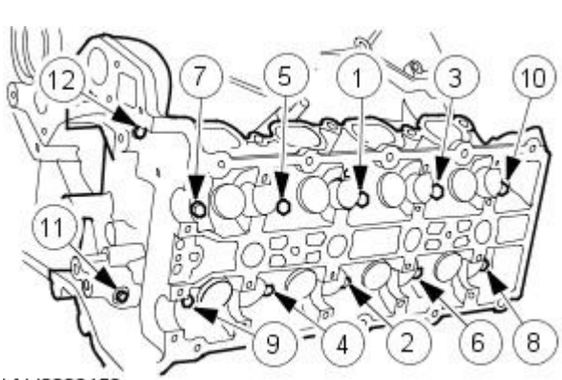

VUJ0002452

27. NOTE: Tighten the bolts 1 to 10 in the sequence shown.

Install the left-hand cylinder head.

1. Tighten bolts 1 to 10 to 20 Nm.
2. Tighten bolts 1 to 10 to 35 Nm.
3. Tighten bolts 1 to 10 to 90°.
4. Tighten bolts 1 to 10 to 90°.
5. Tighten bolts 11 to 12 to 25 Nm.

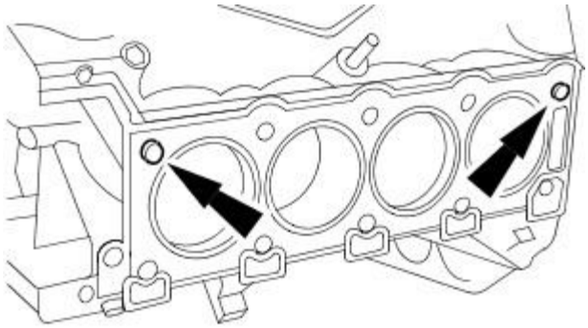

E31267

28. Install a new right-hand cylinder head gasket.

- Make sure the cylinder head dowels are correctly located.

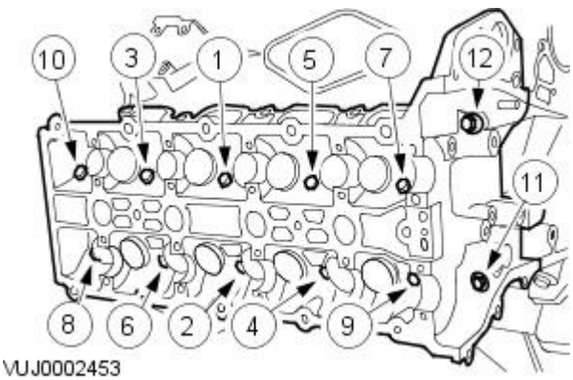

VUJ0002453

29. NOTE: Tighten the bolts 1 to 10 in the sequence shown.

Install the right-hand cylinder head.

1. Tighten bolts 1 to 10 to 20 Nm.
2. Tighten bolts 1 to 10 to 35 Nm.
3. Tighten bolts 1 to 10 to 90°.
4. Tighten bolts 1 to 10 to 90°.
5. Tighten bolts 11 to 12 to 25 Nm.

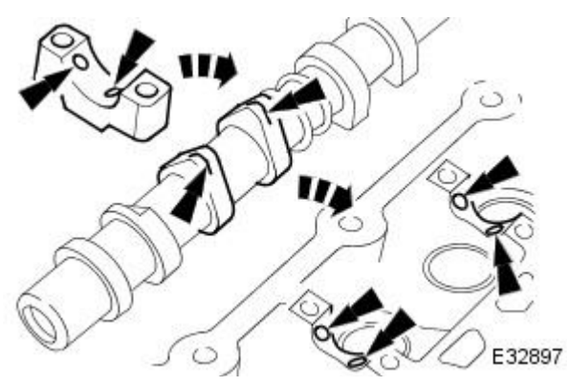

E32897

30. NOTE: Make sure all components are clean.

Apply oil (EP-90) to the camshaft and bearing surfaces, as follows:

- To the upper face of each bearing surface in the cylinder head.
- To the upper face of each bearing surface in each bearing cap.
- On the cam lobes ONLY, not on the base circle area.

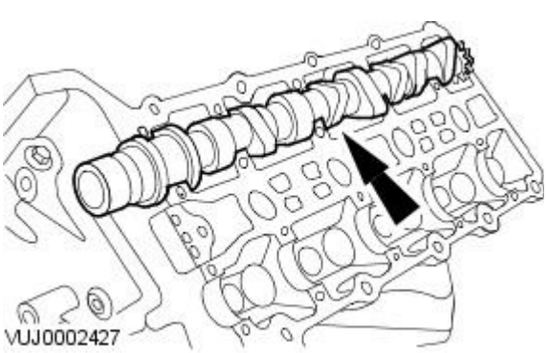

VUJ0002427

31. Install the left-hand inlet camshaft.

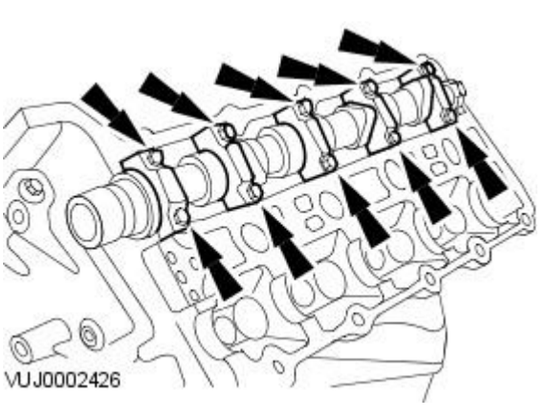

VUJ0002426

32. CAUTION: Alternate bolt tightening to correctly seat the camshaft bearing caps.

Install the camshaft bearing cap bolts evenly.

- Tighten to 10 Nm.

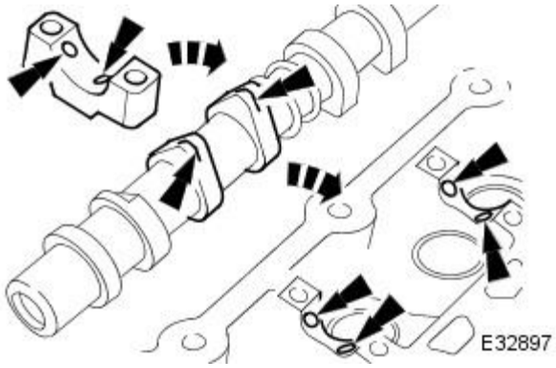

33. NOTE: Make sure all components are clean.

Apply oil (EP-90) to the camshaft and bearing surfaces, as follows:

- To the upper face of each bearing surface in the cylinder head.
- To the upper face of each bearing surface in each bearing cap.
- On the cam lobes ONLY, not on the base circle area.

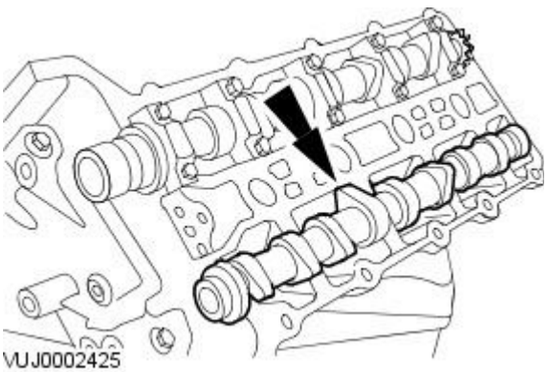

34. Install the left-hand exhaust camshaft.

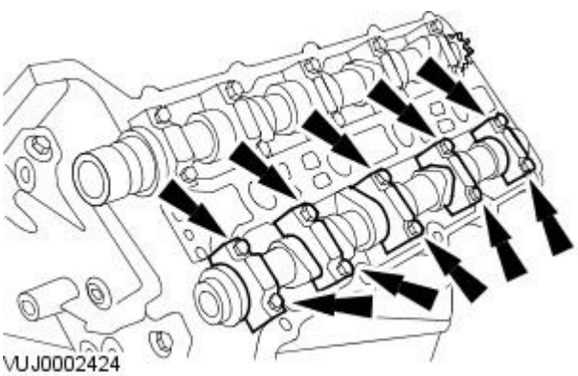

35. CAUTION: Alternate bolt tightening to correctly seat the camshaft bearing caps.

Install the camshaft bearing cap bolts evenly.

- Tighten to 10 Nm.

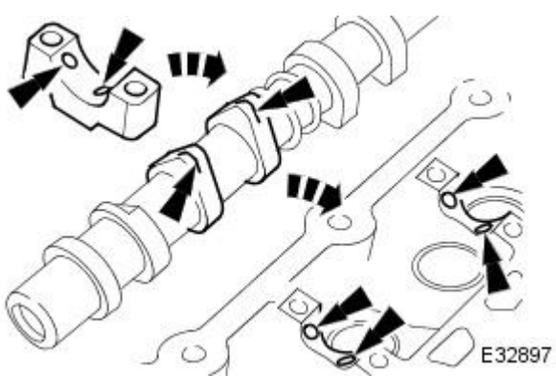

36. NOTE: Make sure all components are clean.

Apply oil (EP-90) to the camshaft and bearing surfaces, as follows:

- To the upper face of each bearing surface in the cylinder head.
- To the upper face of each bearing surface in each bearing cap.
- On the cam lobes ONLY, not on the base circle area.

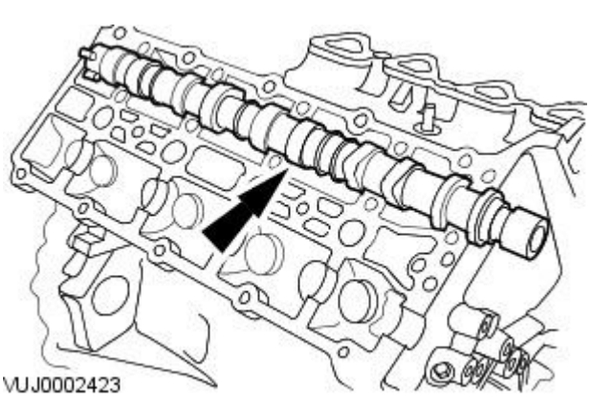

37. Install the right-hand inlet camshaft.

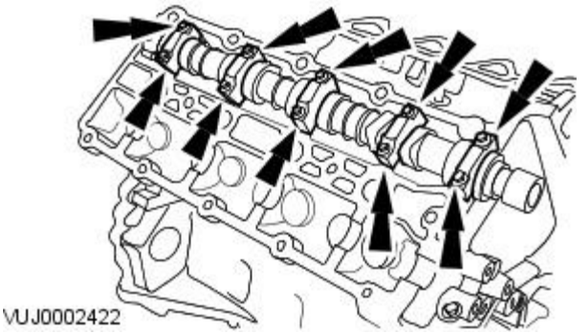

38. CAUTION: Alternate bolt tightening to correctly seat the camshaft bearing caps.

Install the camshaft bearing cap bolts evenly.

- Tighten to 10 Nm.

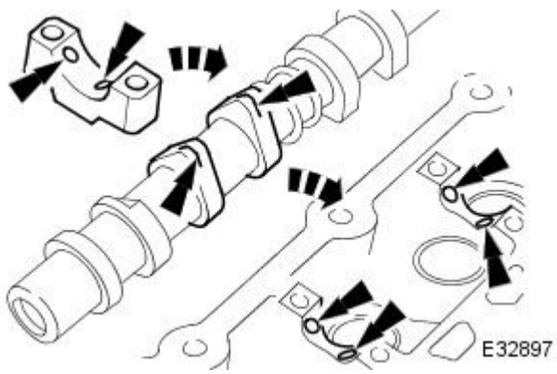

39. NOTE: Make sure all components are clean.

Apply oil (EP-90) to the camshaft and bearing surfaces, as follows:

- To the upper face of each bearing surface in the cylinder head.
- To the upper face of each bearing surface in each bearing cap.
- On the cam lobes ONLY, not on the base circle area.

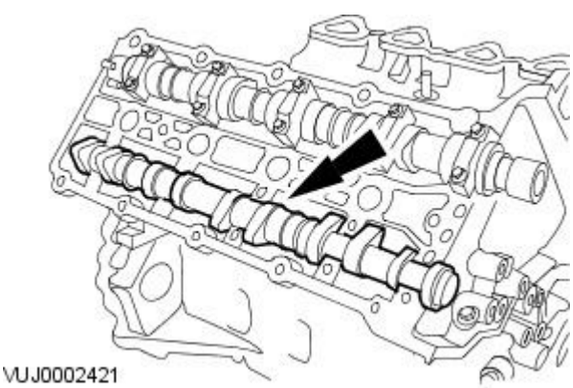

40. Install the right-hand exhaust camshaft.

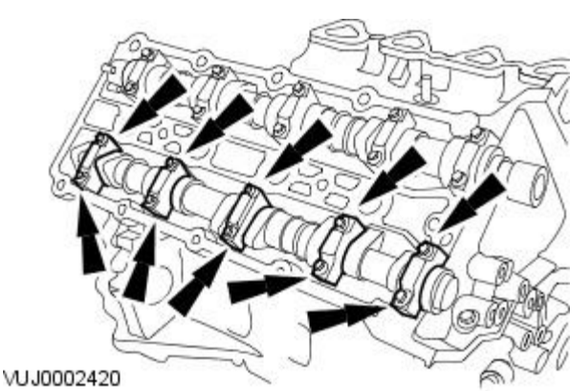

41. CAUTION: Alternate bolt tightening to correctly seat the camshaft bearing caps.

Install the camshaft bearing cap bolts evenly.

- Tighten to 10 Nm.

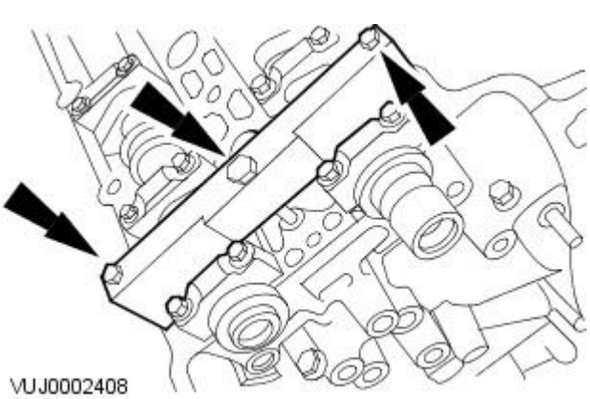

42. Install the camshaft setting tool.

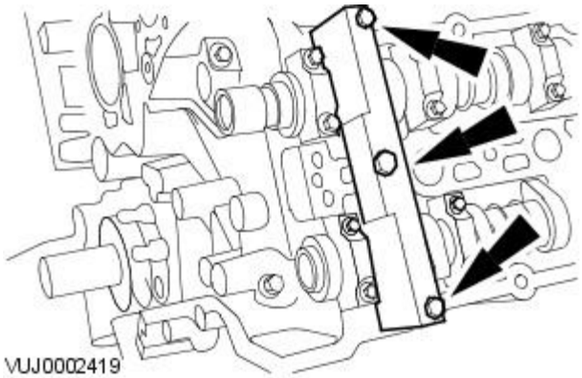

43. Install the camshaft setting tool.

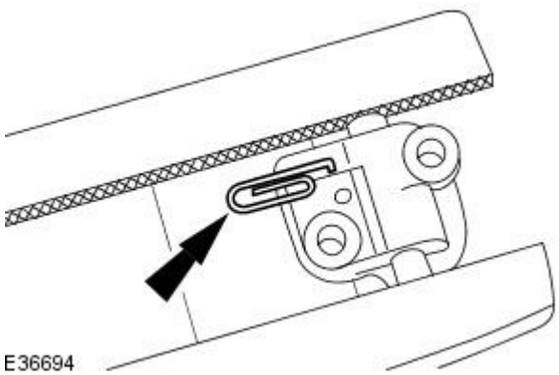

44. Using a suitable tool, retain the right-hand timing chain tensioner piston.

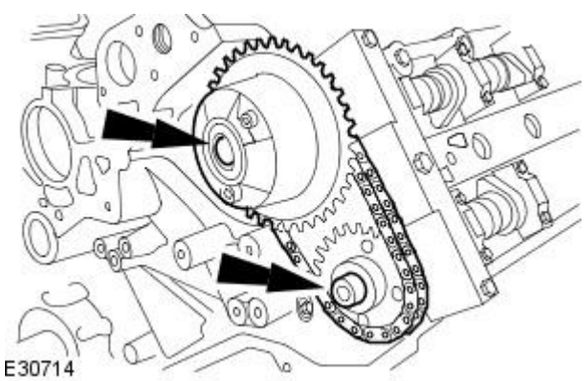

45. CAUTIONS:

Do not tighten the camshaft sprocket retaining bolts.

Make sure the secondary timing chain and camshaft sprockets are free to rotate.

Install the camshaft sprockets.

- Install the secondary timing chain tensioner and secondary timing chain to the camshaft sprockets.

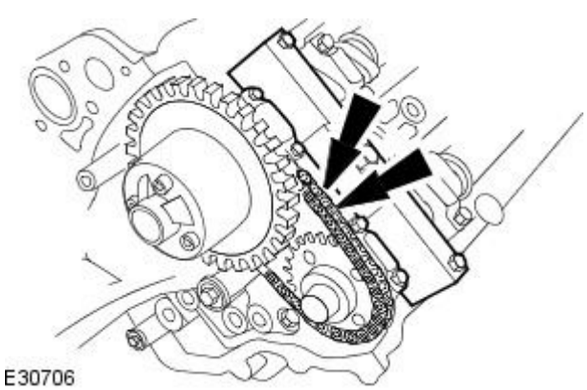

46. Install the secondary timing chain tensioner retaining bolts.

- Tighten to 12 Nm.

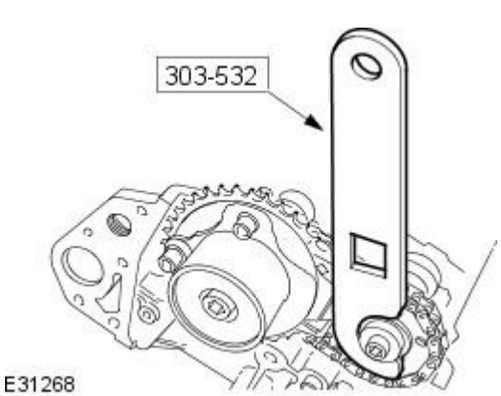

47. Install the timing chain tensioning tool 303-532 to the exhaust camshaft sprocket.

- Reposition the camshaft sprockets for the most advantageous position for use of the tool.

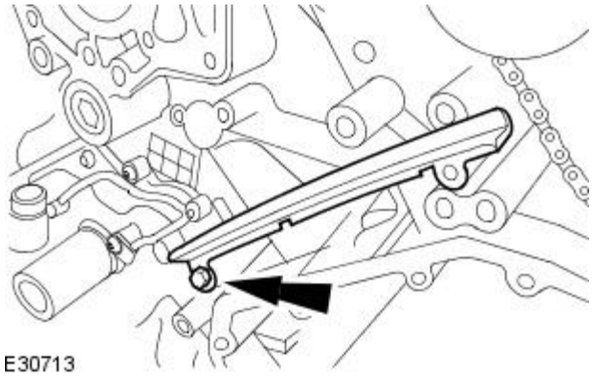

48. Install the primary timing chain tensioner guide.

- Tighten to 12 Nm.

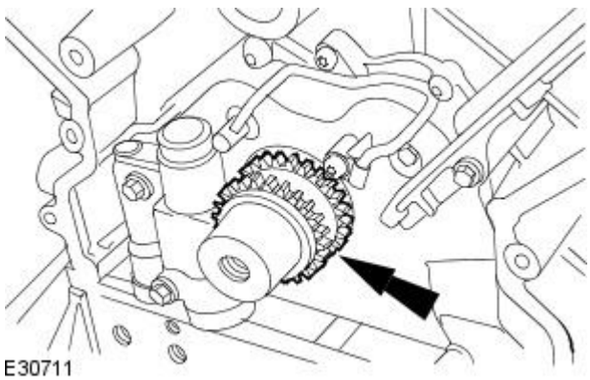

49. Install the crankshaft sprocket.

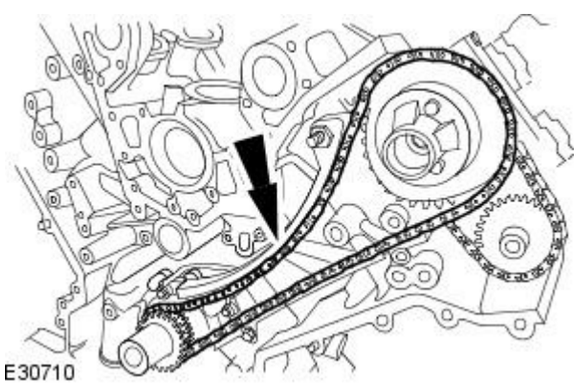

50. CAUTION: Make sure the timing chain slack is on the tensioned side of the timing chain.

Install the primary timing chain.

- Install the primary chain over the crankshaft sprocket and the intake sprocket.

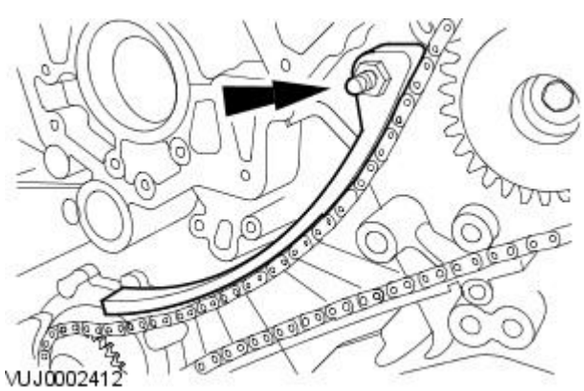

51. Install the primary timing chain tensioner guide.

- Tighten to 12 Nm.

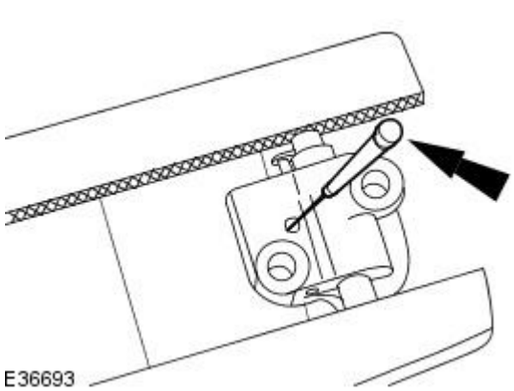

52. CAUTION: During timing chain tensioner compression, do not release the ratchet stem until the timing chain tensioner piston is fully bottomed in its bore or damage to the ratchet stem will result.

Using a suitable tool, hold the left-hand timing chain tensioner ratchet lock mechanism away from the ratchet stem.

53. NOTE: The timing chain tensioner piston should retract with minimal force. If binding occurs, reposition the timing chain tensioner to eliminate side loading.

Slowly compress the left-hand timing chain tensioner.

54. NOTE: The retaining tool must remain in the timing chain tensioner until the timing chain tensioner is installed to the engine with the piston bottomed in the bore.

Using a suitable tool, retain the left-hand timing chain tensioner piston.

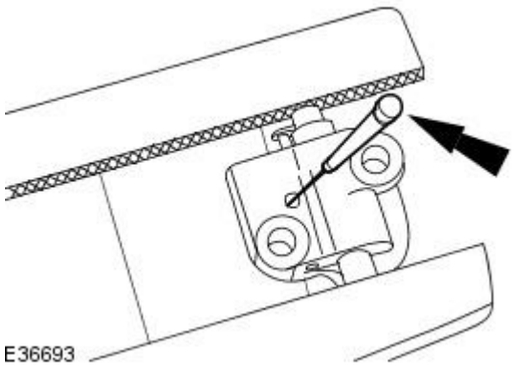

E36693

55. Install the primary timing chain tensioner assembly.

- Tighten to 12 Nm.

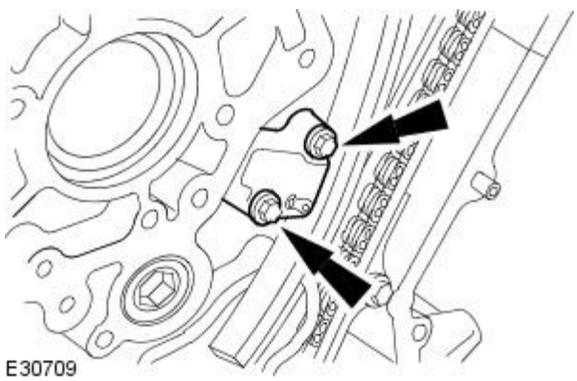

E30709

56. Release the tension in the left-hand timing chain tensioner.

- Remove the retaining tool.

57. CAUTION: While applying the opposing force to sprocket and chain, tighten the sprocket bolt.

Using the special tool apply force to the tool in an anti-clockwise direction to tension the primary timing chain on its drive side.

- Tighten to 120 Nm.

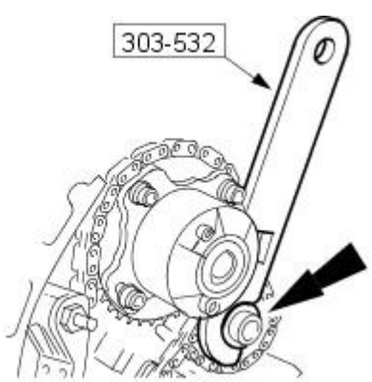

E31269

58. CAUTION: While applying the opposing force to sprocket and chain, tighten the sprocket bolt.

Using the special tool apply force to the tool in an anti-clockwise direction.

- Tighten to 120 Nm.

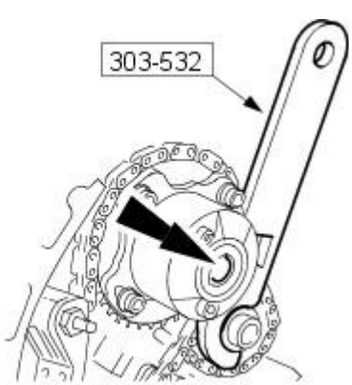

E31270

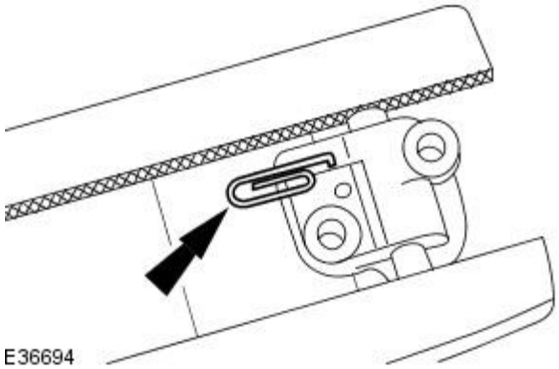

59. Using a suitable tool, retain the right-hand timing chain tensioner piston.

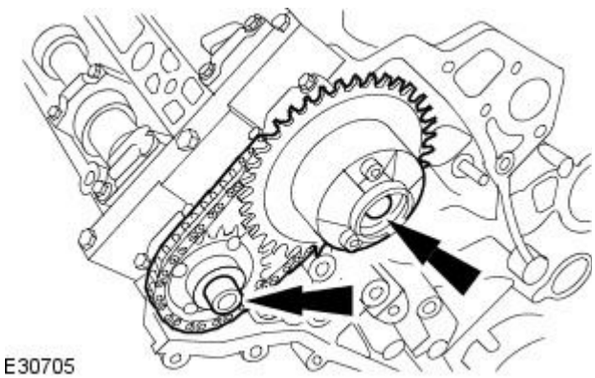

60. CAUTIONS:

Do not tighten the camshaft sprocket retaining bolts.

Make sure the secondary timing chain and camshaft sprockets are free to rotate.

Install the camshaft sprockets.

- Install the secondary timing chain tensioner and secondary timing chain to the camshaft sprockets.

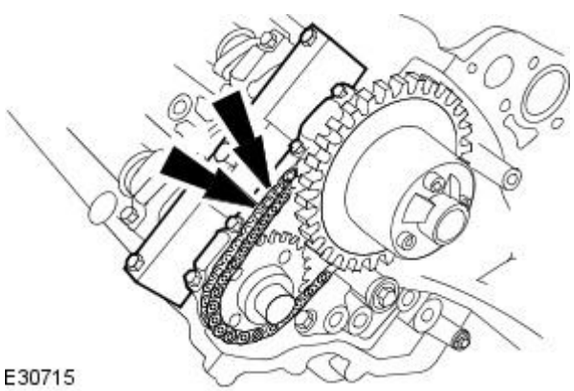

61. Install the secondary timing chain tensioner retaining bolts.

- Tighten to 12 Nm.

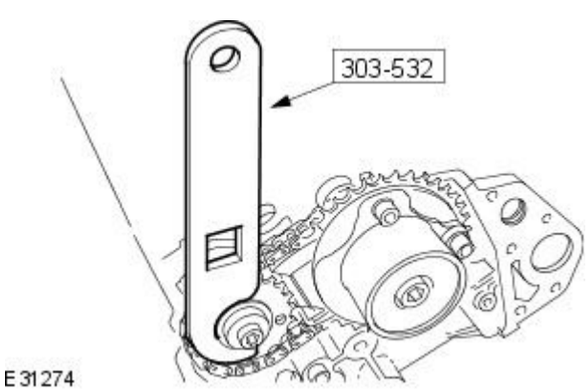

62. Install the timing chain tensioning tool 303-532 to the exhaust camshaft sprocket.

- Reposition the camshaft sprockets for the most advantageous position for use of the tool.

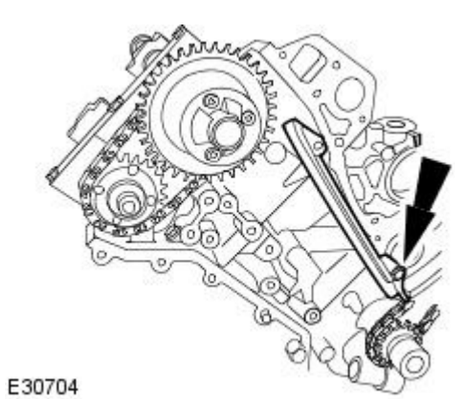

63. Install the primary timing chain guide.

- Tighten to 12 Nm.

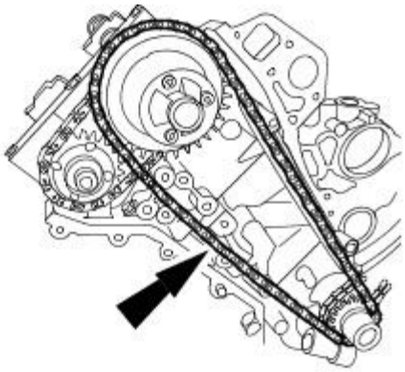

E30703

64. CAUTION: Make sure the timing chain slack is on the tensioned side of the timing chain.

Install the primary timing chain.

- Install the primary chain over the crankshaft sprocket and the intake sprocket.

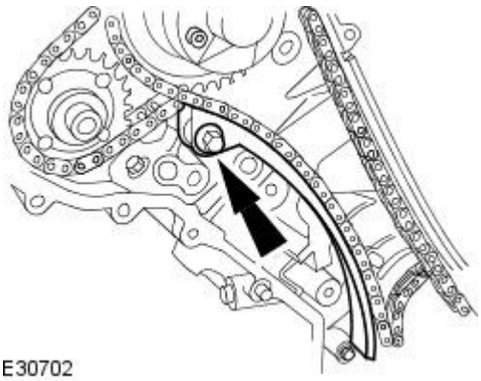

E30702

65. Install the primary timing chain tensioner guide.

- Tighten to 12 Nm.

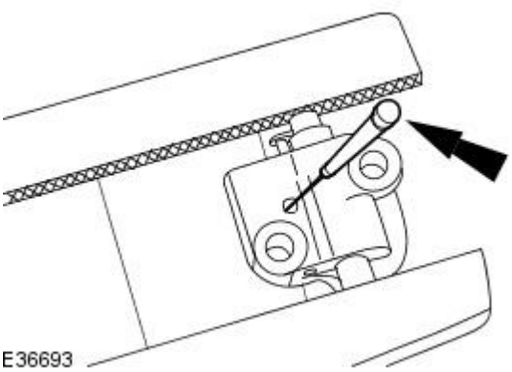

E36693

66. CAUTION: During timing chain tensioner compression, do not release the ratchet stem until the timing chain tensioner piston is fully bottomed in its bore or damage to the ratchet stem will result.

Using a suitable tool, hold the right-hand timing chain tensioner ratchet lock mechanism away from the ratchet stem.

67. NOTE: The timing chain tensioner piston should retract with minimal force. If binding occurs, reposition the timing chain tensioner to eliminate side loading.

Slowly compress the right-hand timing chain tensioner.

68. NOTE: The retaining tool must remain in the timing chain tensioner until the timing chain tensioner is installed to the engine with the piston bottomed in the bore.

Using a suitable tool, retain the right-hand timing chain tensioner piston.

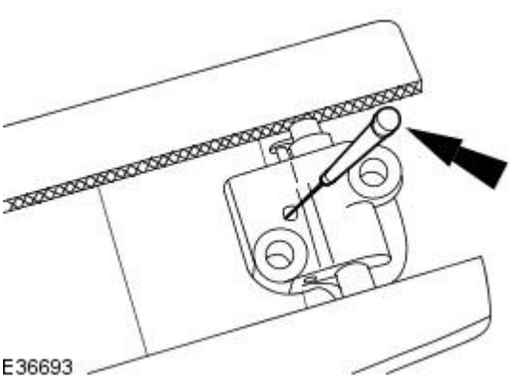

E36693

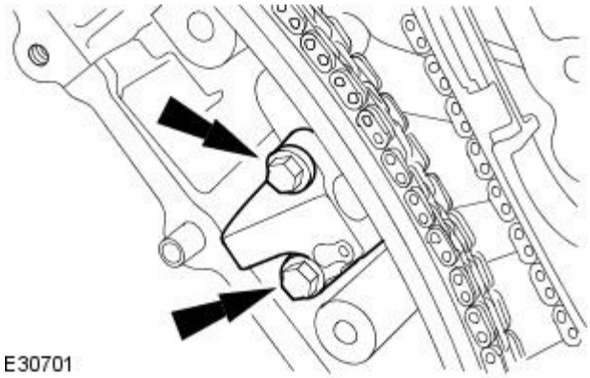

69. Install the primary timing chain tensioner assembly.

- Tighten to 12 Nm.

70. Release the tension in the right-hand timing chain tensioner.

- Remove the retaining tool.

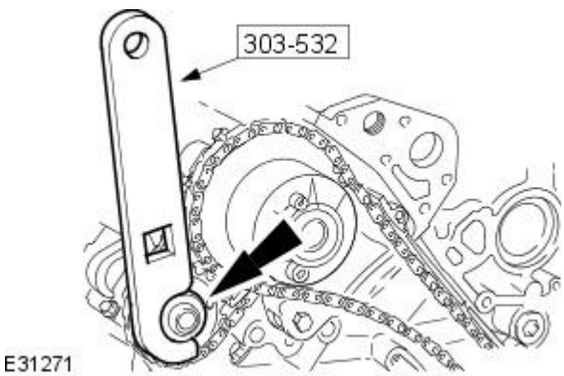

71. CAUTION: While applying the opposing force to sprocket and chain, tighten the sprocket bolt.

Using the special tool apply force to the tool in an anti-clockwise direction to tension the primary timing chain on its drive side.

- Tighten to 120 Nm.

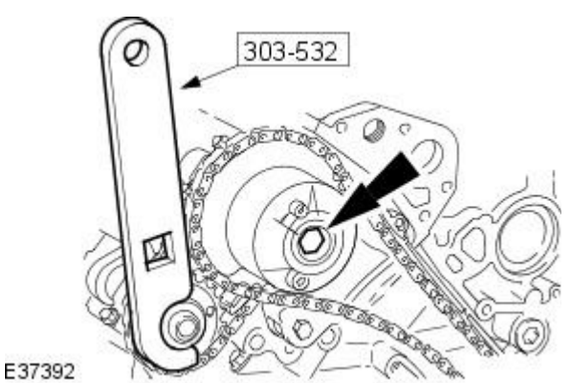

72. CAUTION: While applying the opposing force to sprocket and chain, tighten the sprocket bolt.

Using the special tool apply force to the tool in an anti-clockwise direction.

- Tighten to 120 Nm.

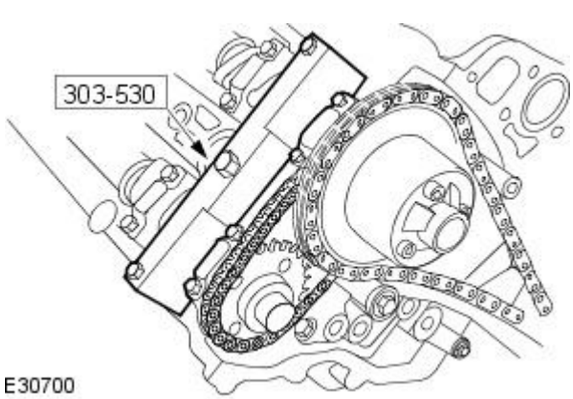

73. Remove the special tool from the Right-hand cylinder head.

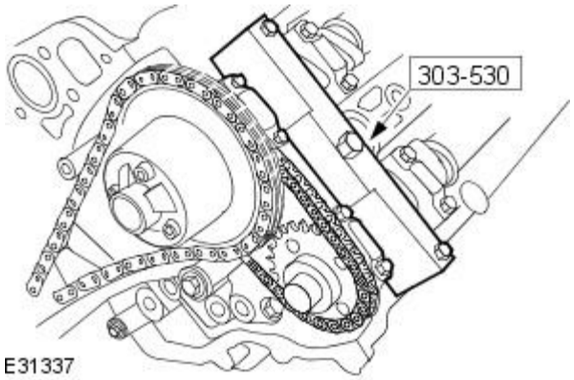

E31337

74. Remove the special tool from the left-hand cylinder head.

Vehicles without supercharger

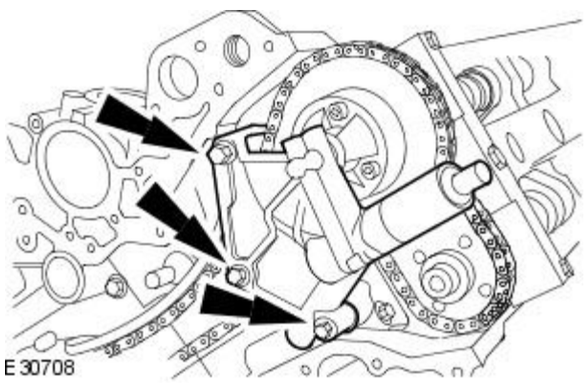
E30708

75. Install the left-hand variable camshaft timing oil control unit housing.

- Install new O-ring seals.
- Tighten to 22 Nm.

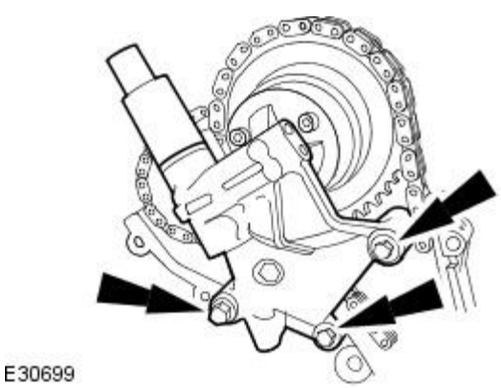
E30699

76. Install the right-hand variable camshaft timing oil control unit housing.

- Install new O-ring seals.
- Tighten to 22 Nm.

All vehicles

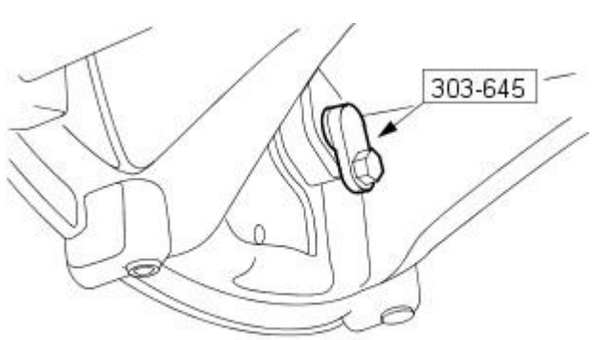

VUJ0002400

77. Remove the special tool.

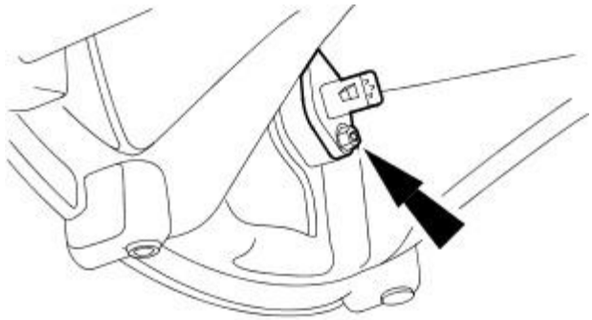

E30694

78. Install the crankshaft position sensor.

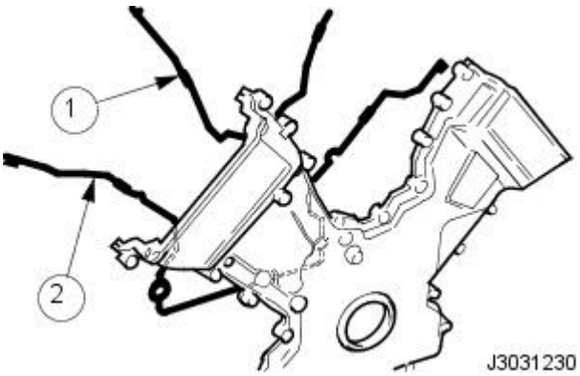

79. Install new seals to the timing cover.

1. Install the new seal to the inner groove on the face of the timing cover.
2. Install the new seal to the outer groove on the face of the timing cover.

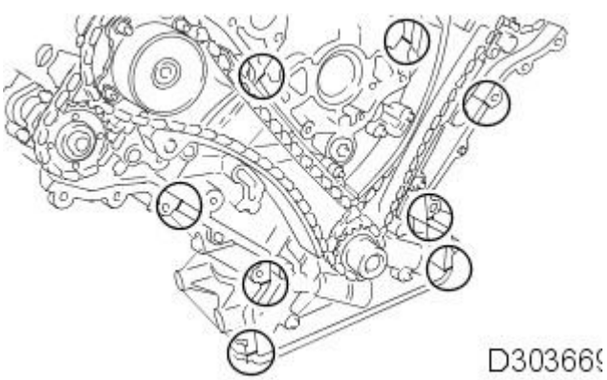

80. Apply sealant to the eight joints on the engine face.

- Sealant beads to be 3 mm diameter and 12 mm long. Cut the nozzle of the sealant tube to produce a 3 mm (0.12 in) bead. (Install and tighten the securing bolts within twenty minutes of sealant application).

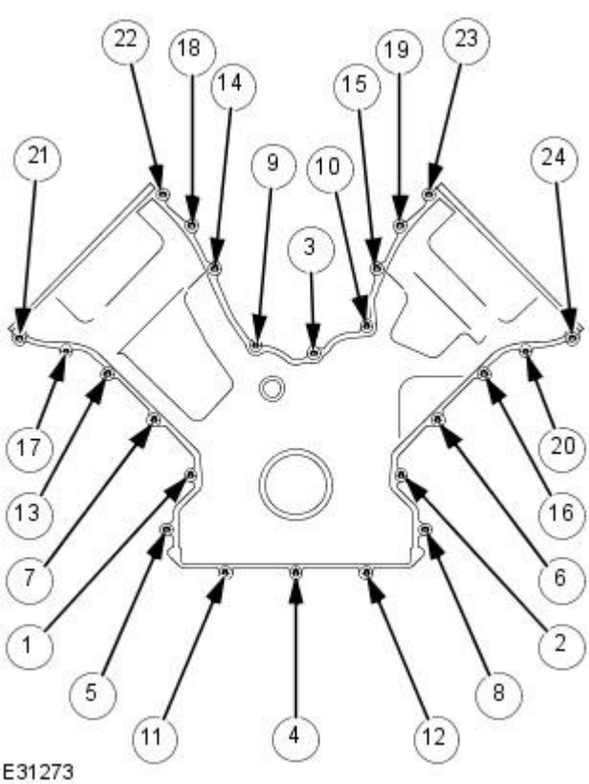

E31273

81. Install the front cover.

- Tighten in the sequence shown.
- Tighten to 13 Nm.

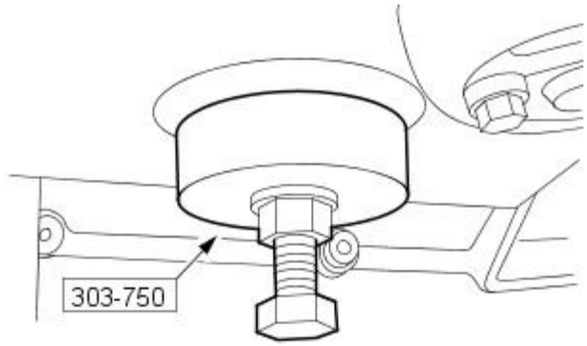

E31173

82. CAUTIONS:

Make sure the crankshaft front seal mating faces are clean and dry.

Do not remove the crankshaft front seal protector.

Using the special tool, install a new crankshaft front seal.

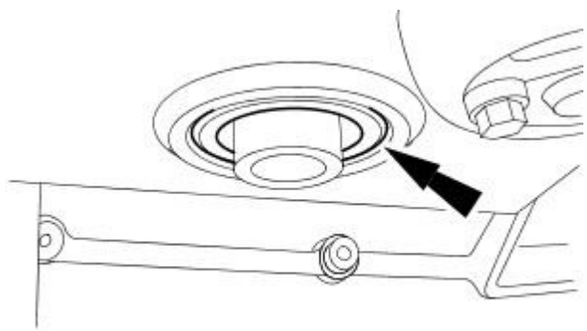

E31172

83. Remove the crankshaft seal protector.

84. Install a new O-ring seal to the crankshaft pulley.

- Lubricate the new O-ring.

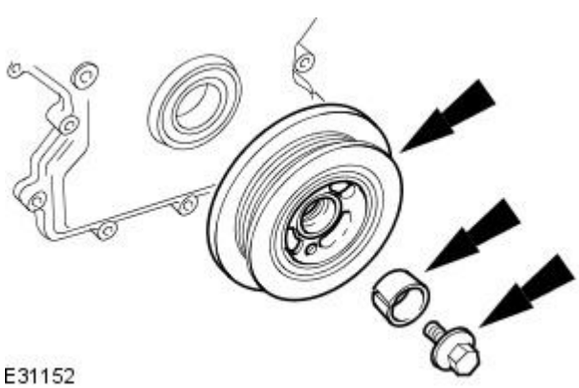

E31152

85. CAUTIONS:

The screw thread in the crankshaft must be cleaned out before a new crankshaft pulley bolt is installed.

A new crankshaft pulley bolt must be used.

Install, but do not tighten, a new crankshaft pulley retaining bolt.

- Install the crankshaft pulley and locking ring to the crankshaft.

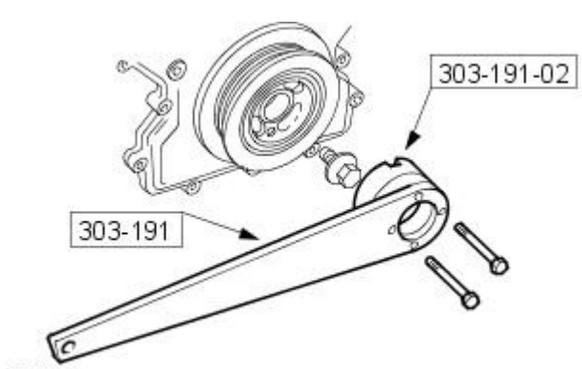

E31149

86. CAUTION: Under no circumstances should the crankshaft setting peg 303-645 be used in the following operations to lock the crankshaft.

Using special tools, retain the crankshaft pulley.

- Tighten the crankshaft pulley retaining bolt to 375 Nm.

87. Remove the special tools.

88. Carry out a valve clearance check.
For additional information, refer to Section 303-00 Engine System - General Information.

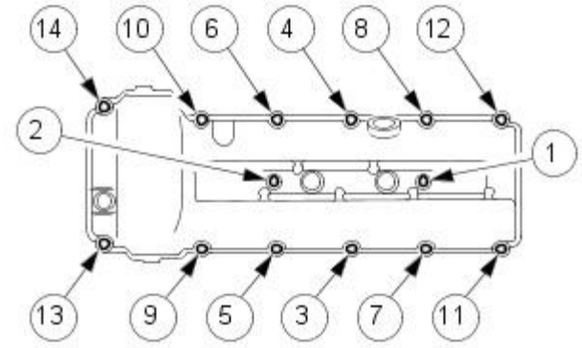

VUJ0001977

89. NOTE: Apply an 8 mm diameter bead of silicone gasket sealant on the two places where the cylinder head and front cover join.

Install the left-hand valve cover.

- Install new valve cover gaskets.
- Tighten in the sequence shown.
- Tighten to 10 Nm.

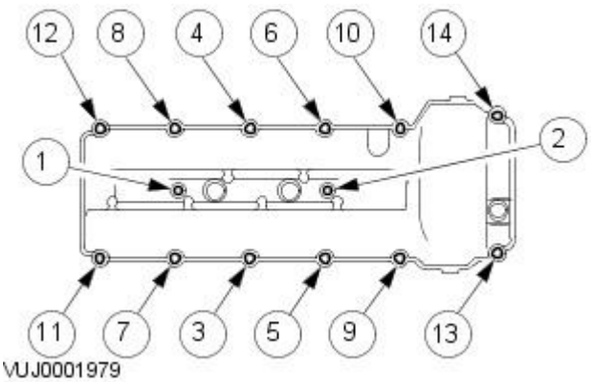

VUJ0001979

90. NOTE: Apply an 8 mm diameter bead of silicone gasket sealant on the two places where the cylinder head and front cover join.

Install the right-hand valve cover.

- Install new valve cover gaskets.
- Tighten in the sequence shown.
- Tighten to 10 Nm.

91. Install the spark plugs.

- Tighten to 27 Nm.

Vehicles without supercharger

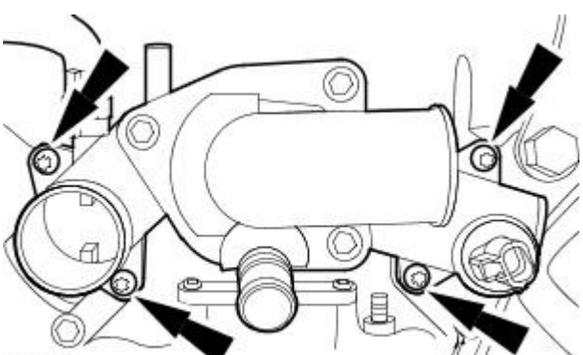
E30682

92. Install the thermostat housing.

- Install new O-ring seals.
- Tighten to 10 Nm.

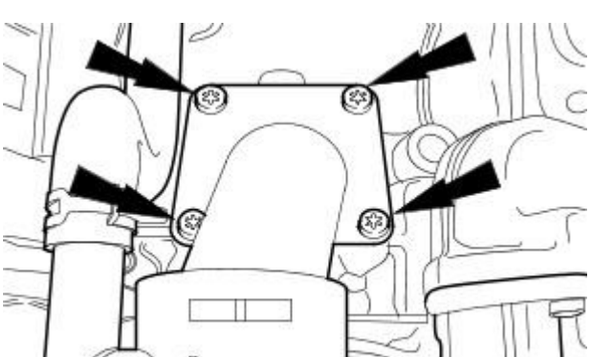
E38205

93. Remove the retaining bolts.

All vehicles

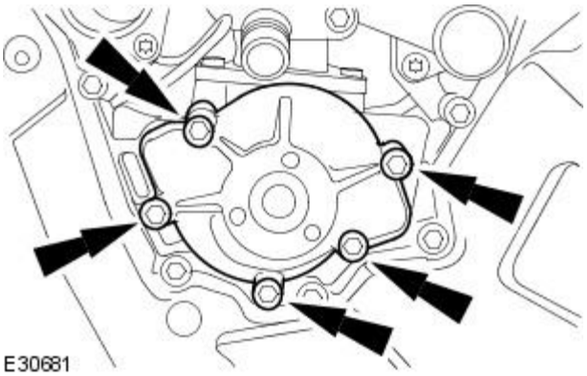

94. Install the water pump.

- Install a new O-ring seals and gasket.
- Tighten to 8 Nm + 90°

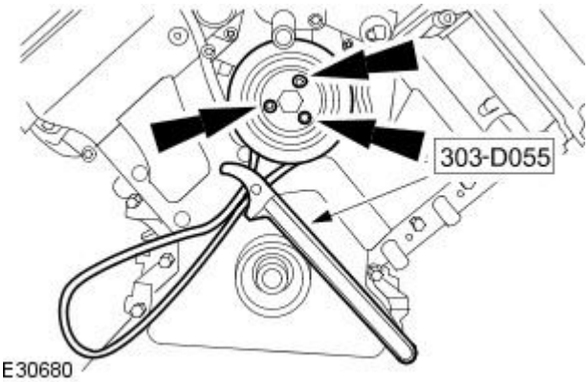

95. Install the water pump pulley.

- Using special tool, retain the water pump pulley.
- Tighten to 10 Nm + 45°

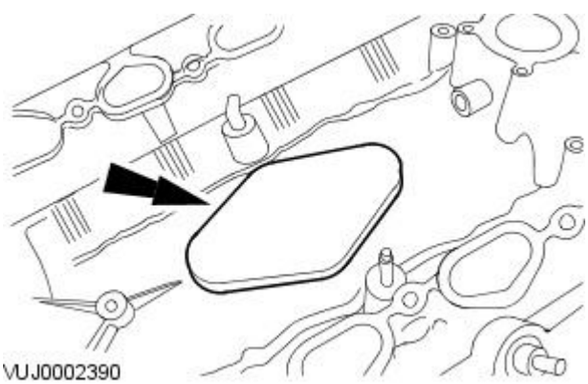

96. Install the engine block insulation grommet.

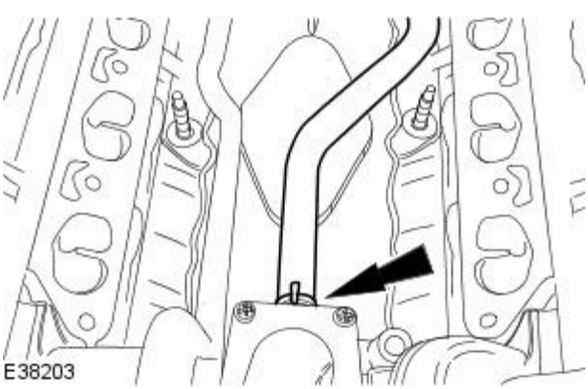

97. Install the coolant hose.

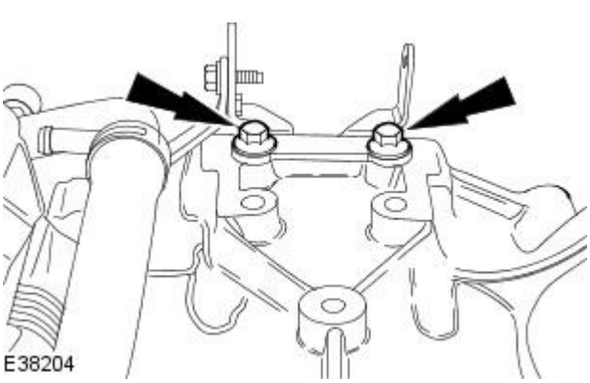

98. Attach the coolant hose.

- Tighten to 18 Nm.

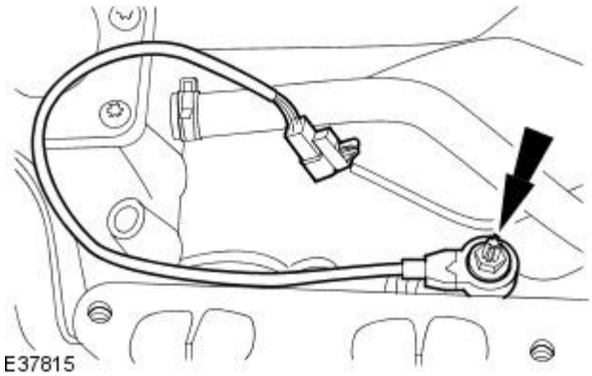

99. NOTE: Left hand shown, right hand similar.

Install the knock sensors.

- Tighten to 20 Nm.

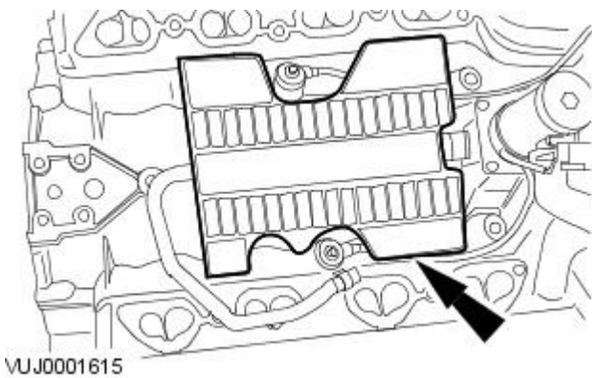

100. Install the noise and vibration insulating pad.

Vehicles with supercharger

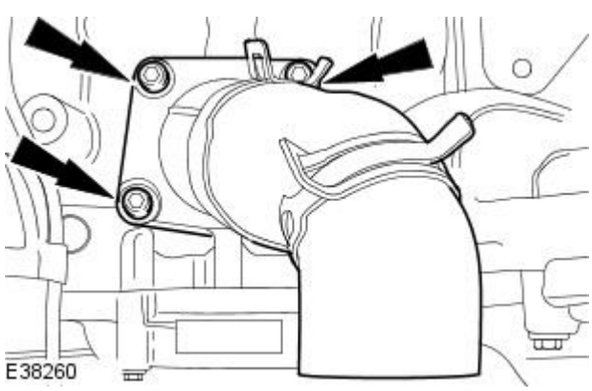

101. Install the coolant bypass to water pump pipe.

- Install new O-ring seal.
- Tighten to 9 Nm.

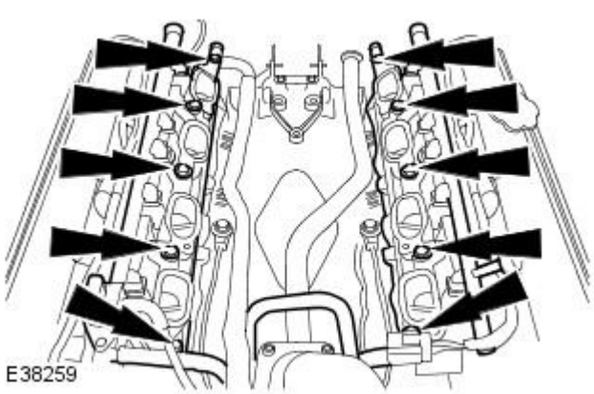

102. Install the lower intake manifold.

- Install new gaskets.
- Tighten to 22 Nm.

www.JagDocs.com

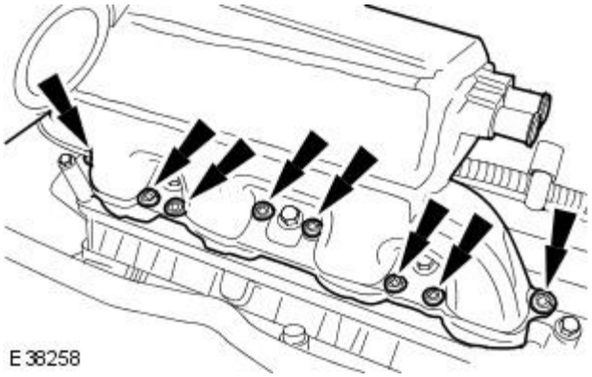

103. Install the charge air cooler.

- Install new gaskets.
- Tighten to 22 Nm.

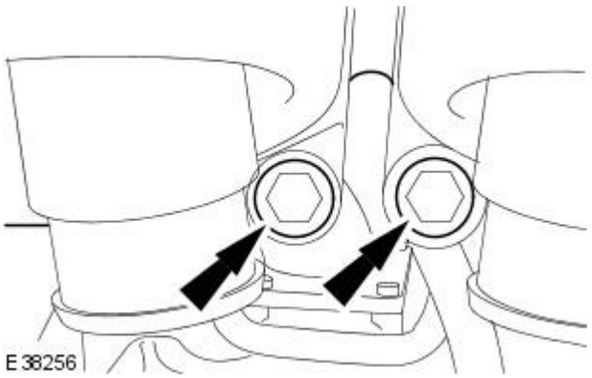

104. Install the supercharger outlet pipe to charge air cooler ducts.

- Tighten to 22 Nm.

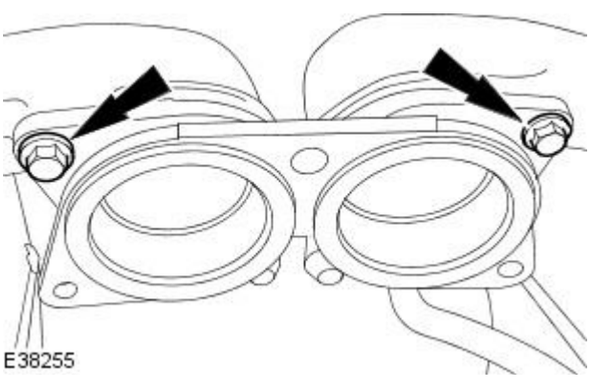

105. Tighten to 22 Nm.

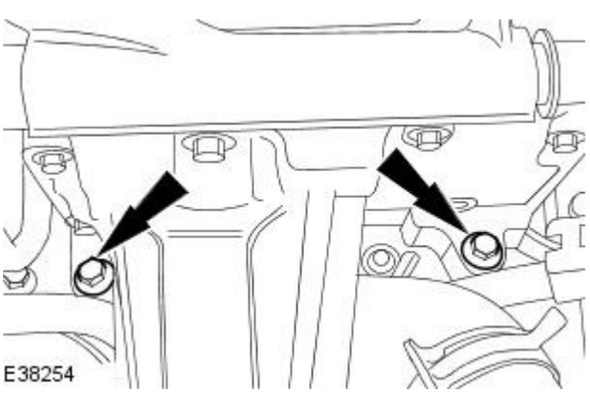

106. Install the supercharger.

- Install the spacer.
- Tighten to 22 Nm.

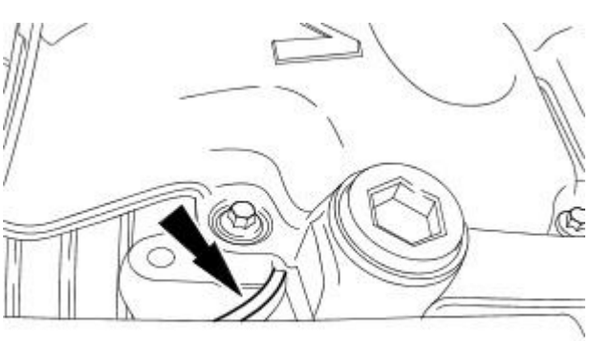

107. Connect the vacuum hose.

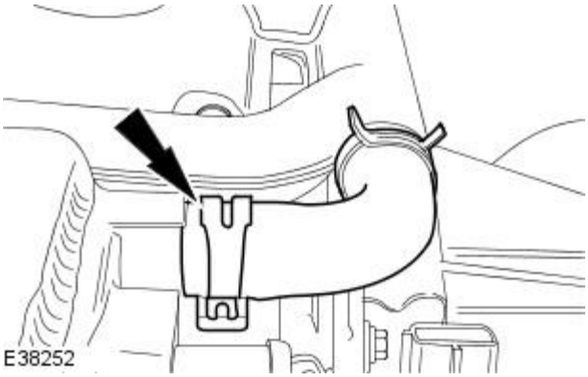

108. Connect the coolant hose.

- Reposition the retaining clip.

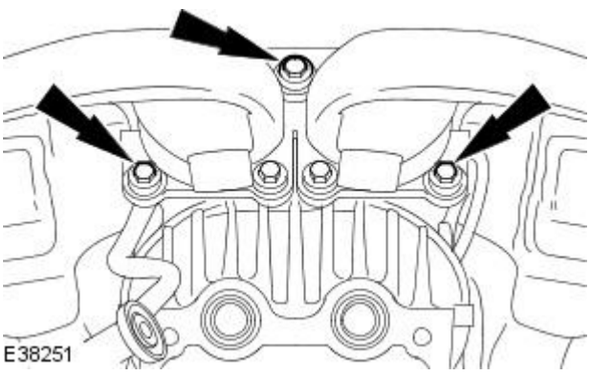

109. Install the retaining bolts.

- Tighten to 22 Nm.

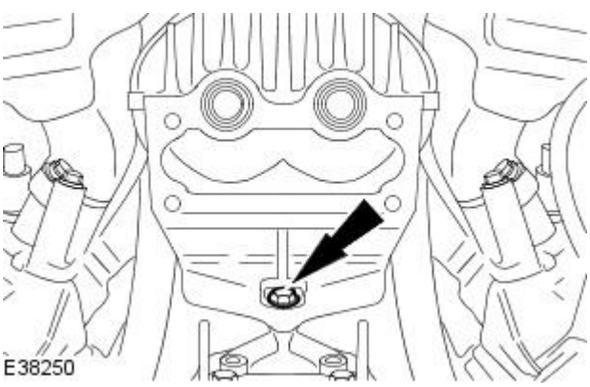

110. Install the retaining bolts.

- Tighten to 22 Nm.

Vehicles without supercharger

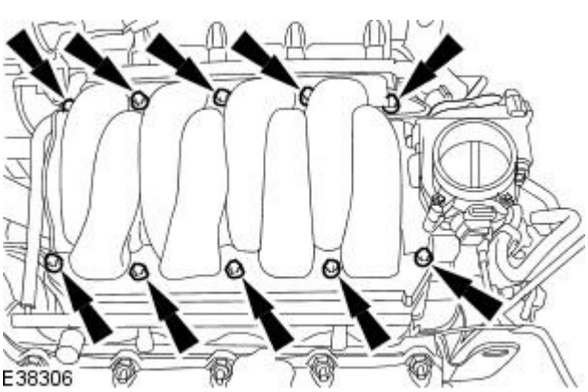

111. Install the intake manifold.

- Tighten to 22 Nm.

Vehicles with supercharger

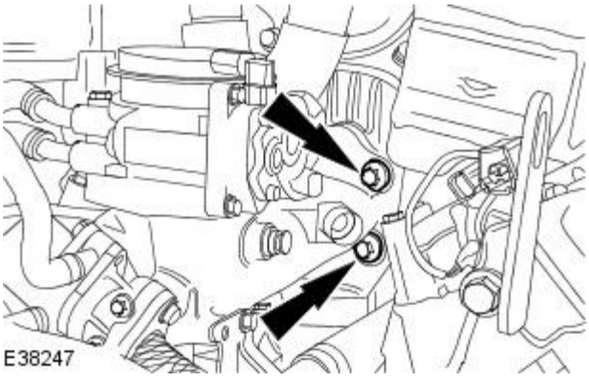

112. NOTE: Make sure the charge air cooler hoses align to the throttle body and throttle body elbow assembly.

Install the throttle body and throttle body elbow assembly.

- Install new gaskets.
- Tighten to 20 Nm.

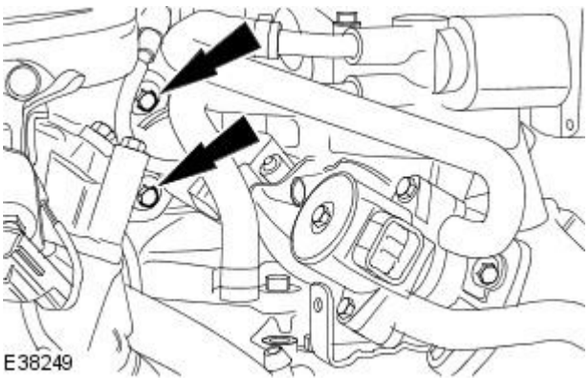

113. Install the retaining bolts.

- Tighten to 20 Nm.

All vehicles

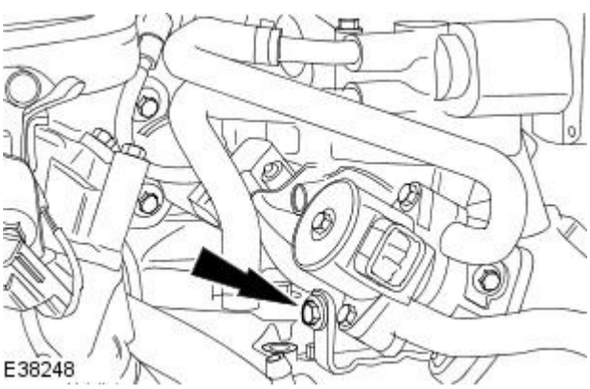

114. Install the retaining bolt.

- Tighten to 12 Nm.

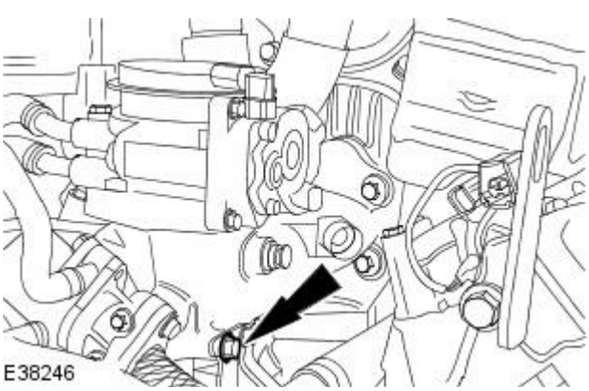

115. Install the retaining bolt.

- Tighten to 12 Nm.

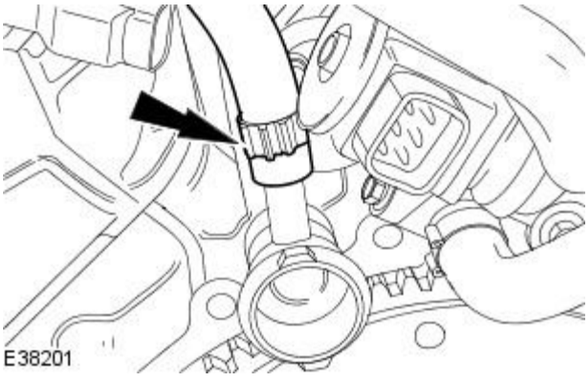

116. Connect the coolant hose.

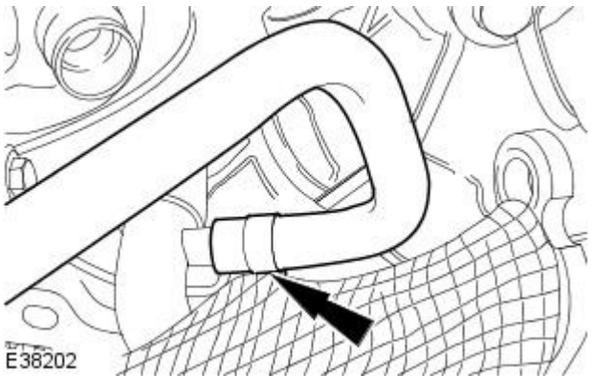

117. Connect the coolant hose.

Vehicles with supercharger

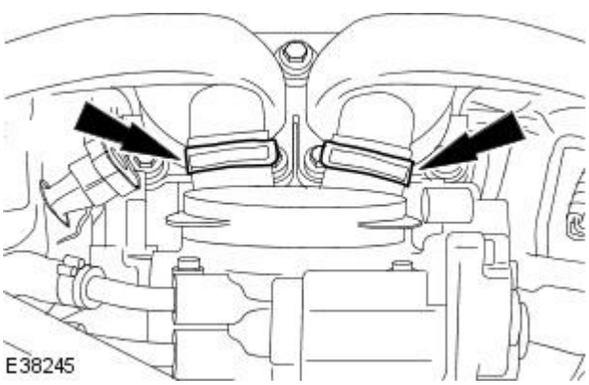

118. Reposition the retaining clips.

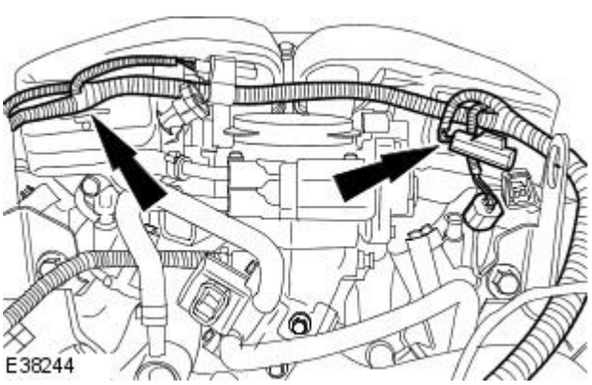

119. Install the engine wiring harness.

Vehicles without supercharger

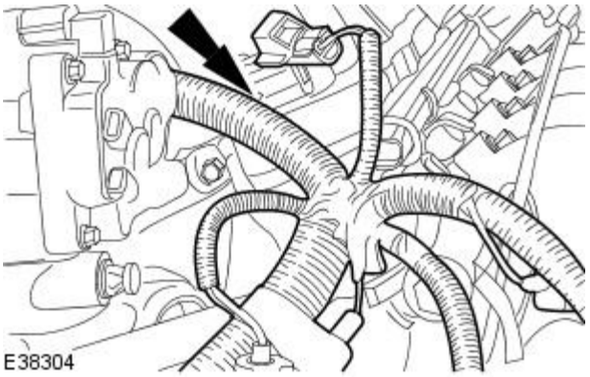

120. Install the engine wiring harness.

All vehicles

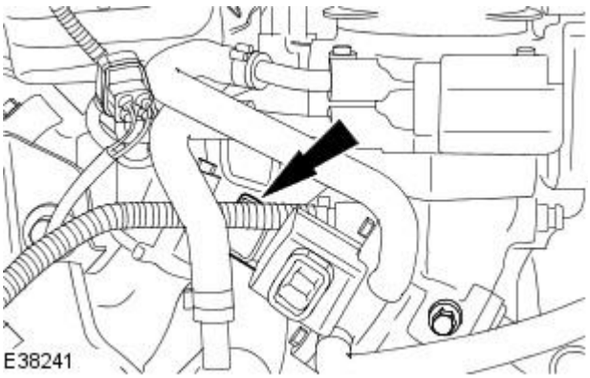

121. Connect the manifold absolute pressure (MAP) sensor

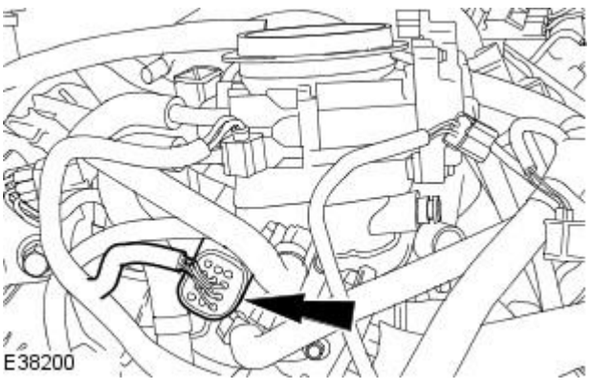

122. Connect the exhaust gas recirculation (EGR) valve electrical connector.

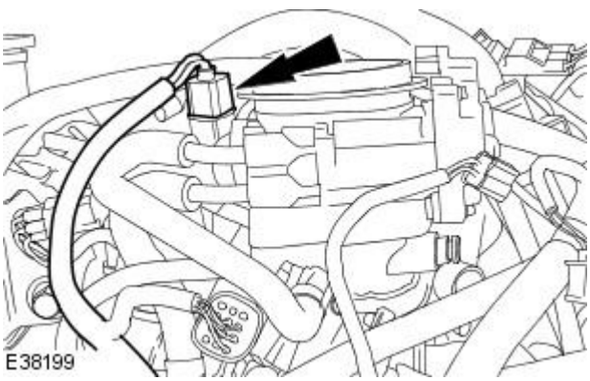

123. Connect the throttle position (TP) sensor electrical connector.

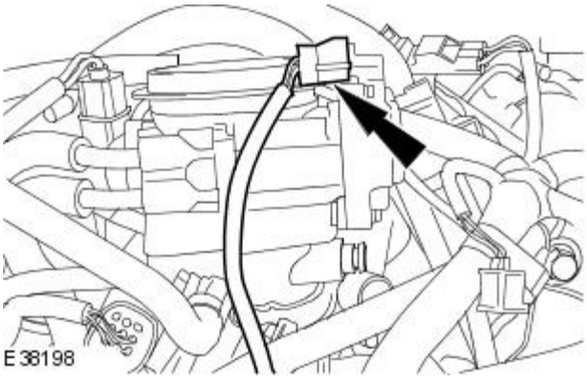

124. Connect the throttle motor electrical connector.

Vehicles with supercharger

125. Connect the fuel temperature sensor electrical connector.

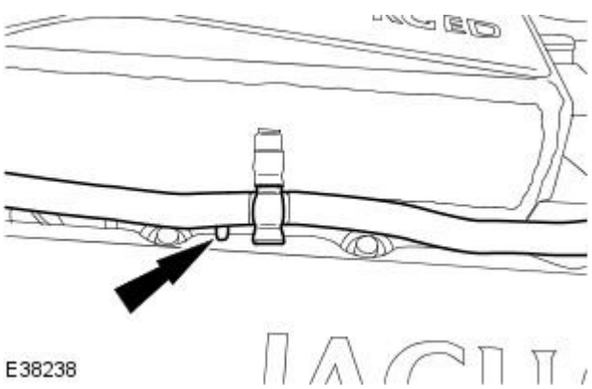

126. NOTE: Right hand shown, left hand similar.

Connect the camshaft position sensor electrical connector.

Vehicles without supercharger

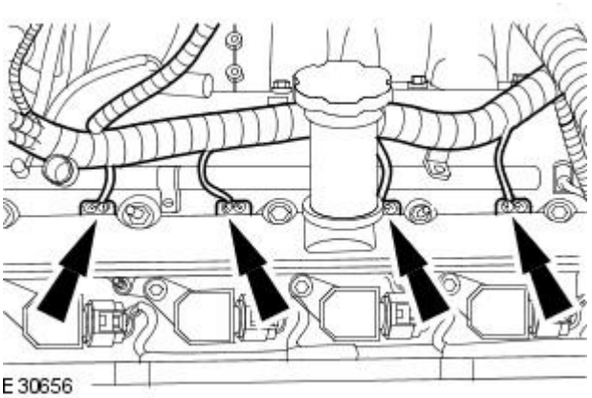

127. NOTE: Left hand shown, right hand similar.

Connect the fuel injector electrical connectors.

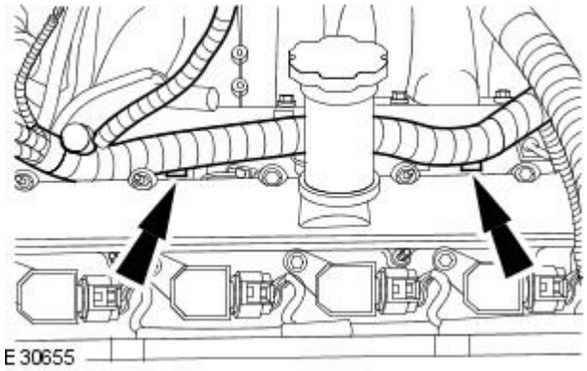

128. NOTE: Left hand shown, right hand similar.

Attach the engine wiring harness.

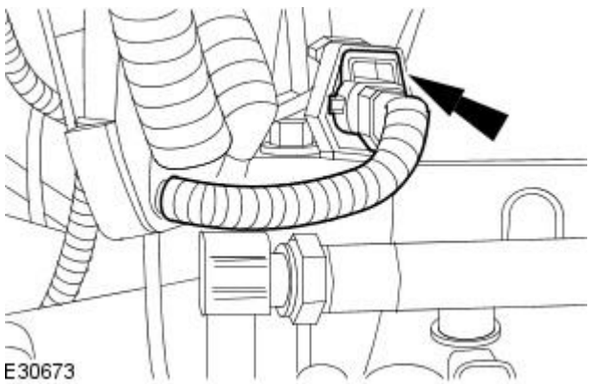

129. NOTE: Right hand shown, left hand similar.

Connect the camshaft position sensor electrical connector.

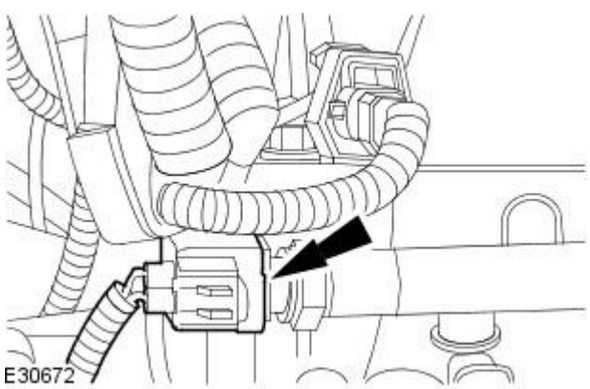

130. Connect the fuel temperature sensor electrical connector.

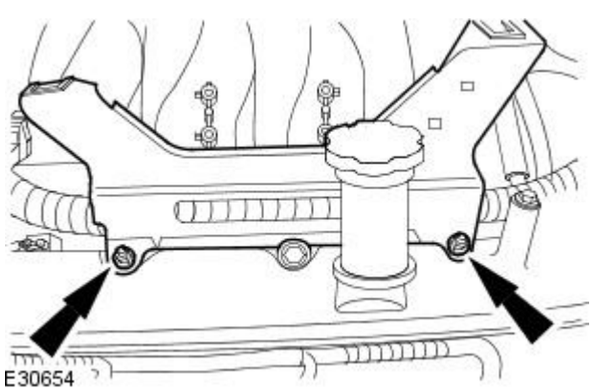

131. NOTE: Left hand shown, right hand similar.

Install the engine cover retaining bracket.

- Tighten to 6 Nm.

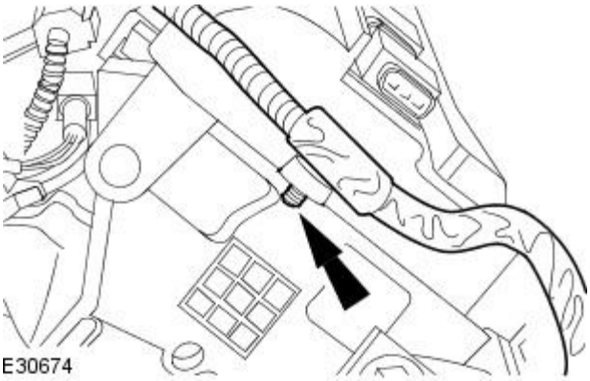

132. Attach the engine wiring harness.

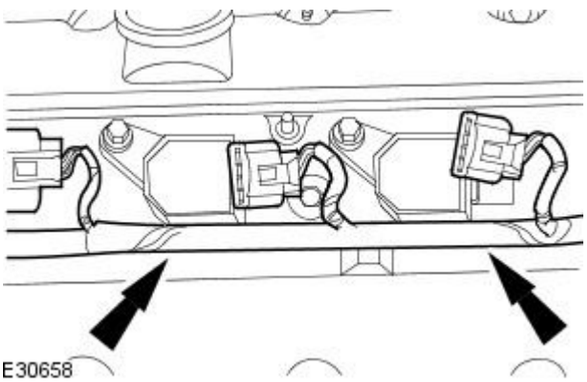

133. Attach the engine wiring harness.

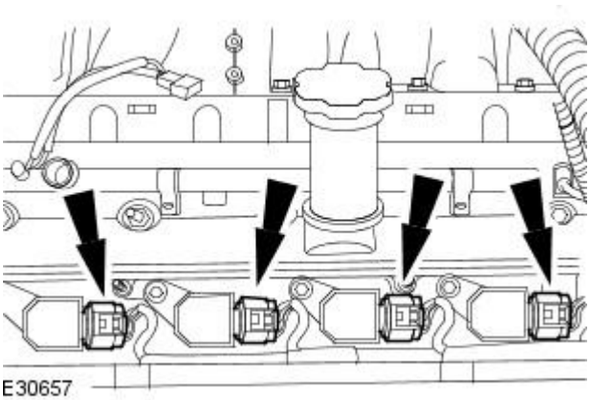

134. Connect the ignition coil electrical connectors.

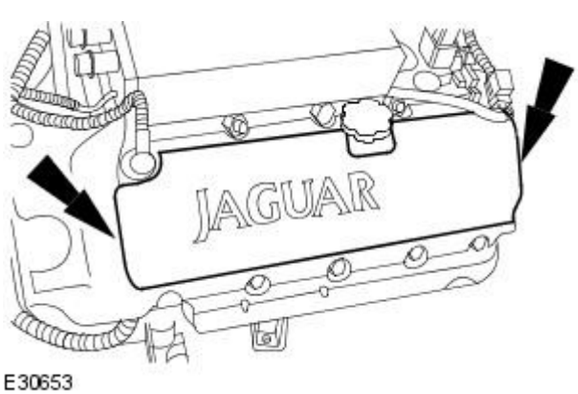

135. Install the ignition coil-on-plug cover.

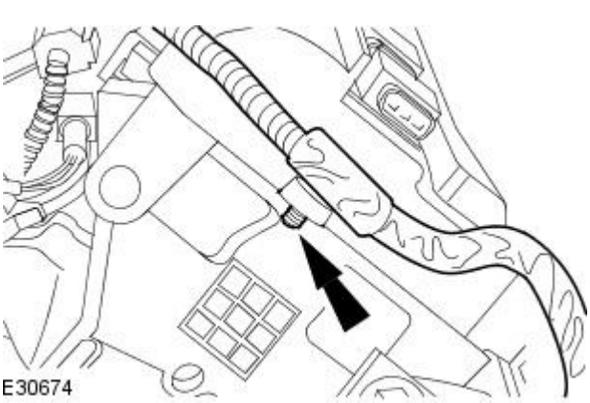

136. NOTE: Right hand shown, left hand similar.

Attach the engine wiring harness.

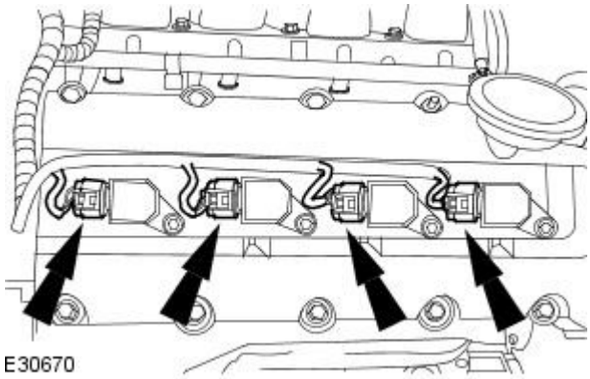

137. Connect the ignition coil-on-plug electrical connectors.

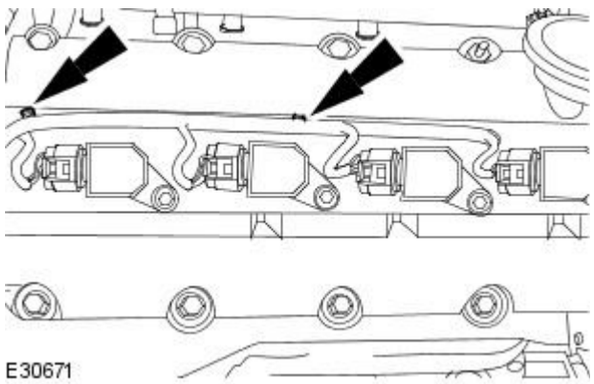

138. Attach the engine wiring harness.

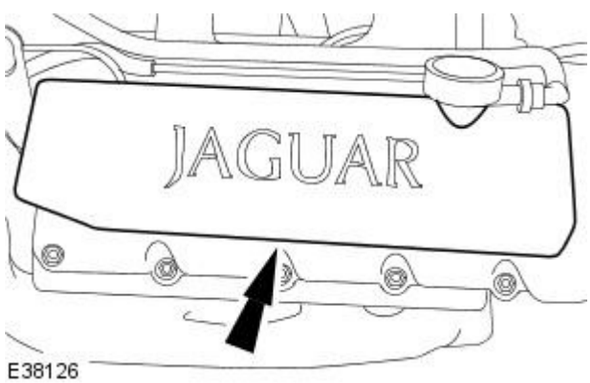

139. Remove the ignition coil-on-plug cover.

Vehicles with supercharger

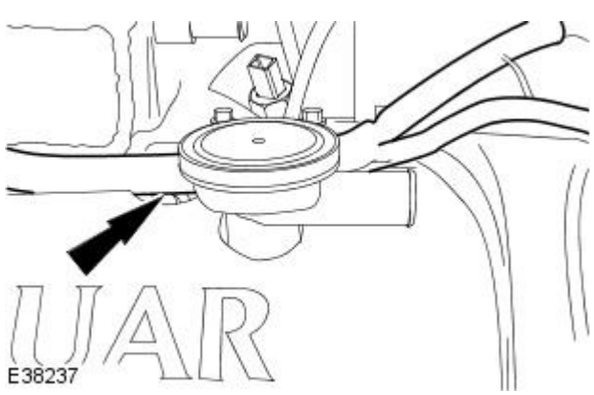

140. Attach the wiring harness.

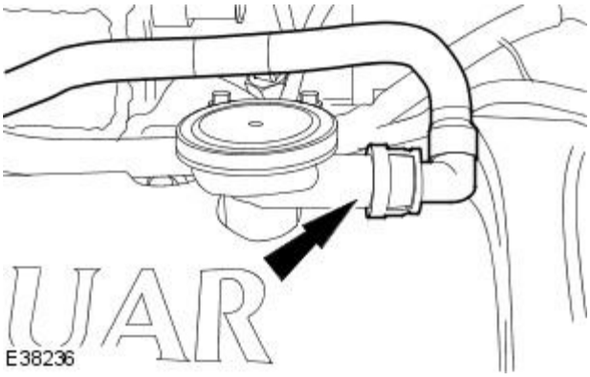

141. Attach the wiring harness.

All vehicles

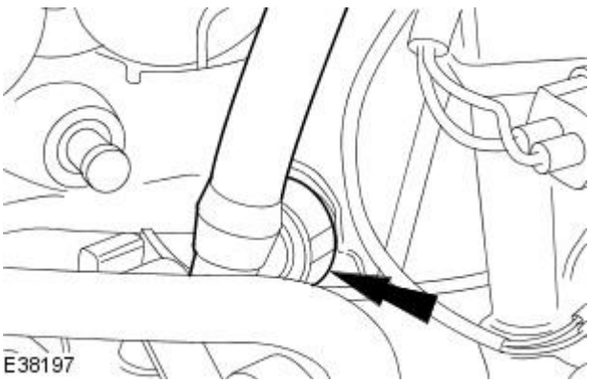

142. Install the positive crankcase ventilation pipe.

Vehicles with supercharger

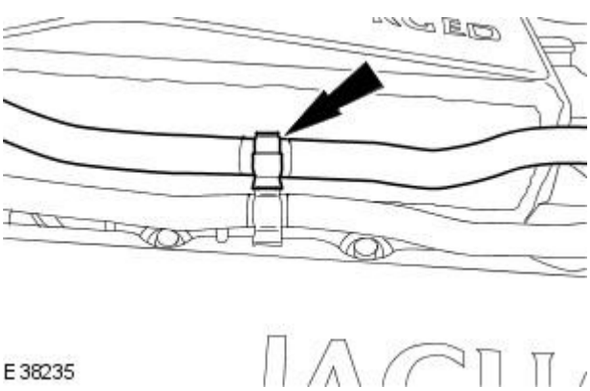

143. Connect the breather pipe.

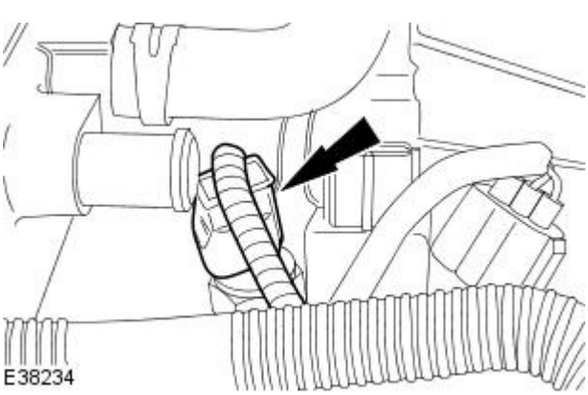

144. Attach the breather pipe.

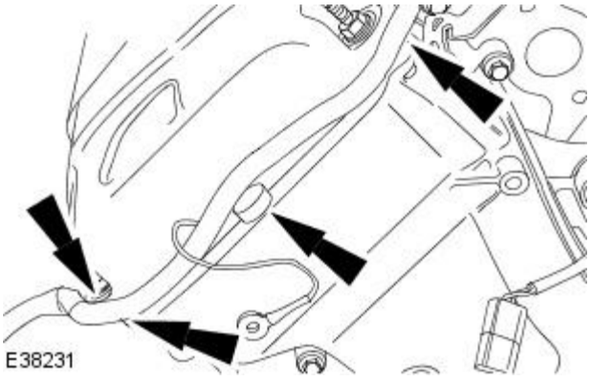

145. Attach the wiring harness.

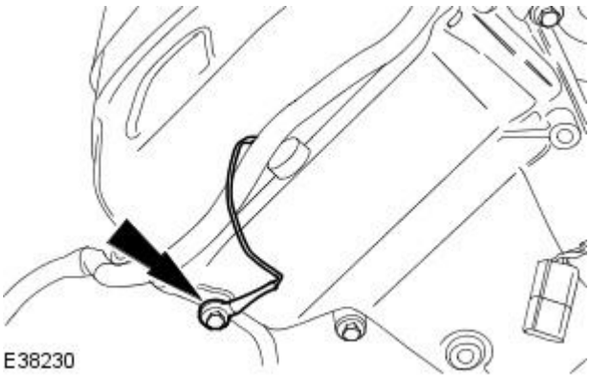

146. Attach the wiring harness.

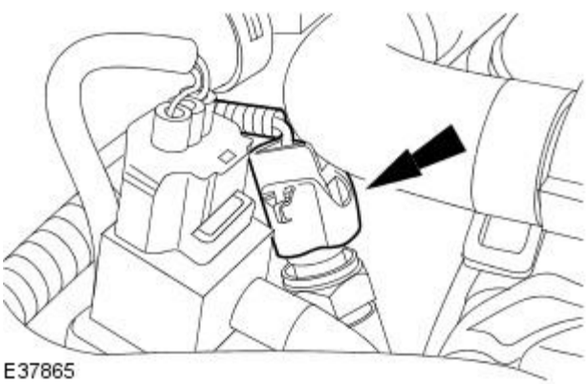

147. Connect the electrical connector.

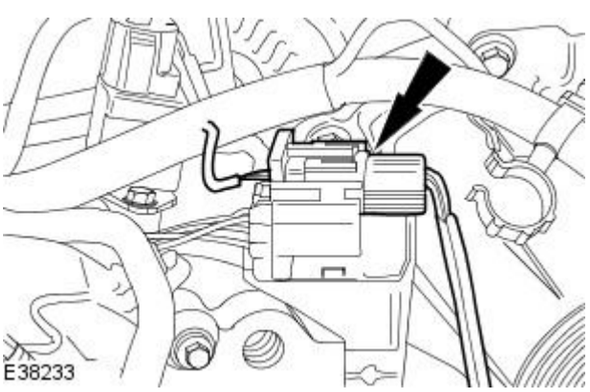

148. Connect the electrical connector.

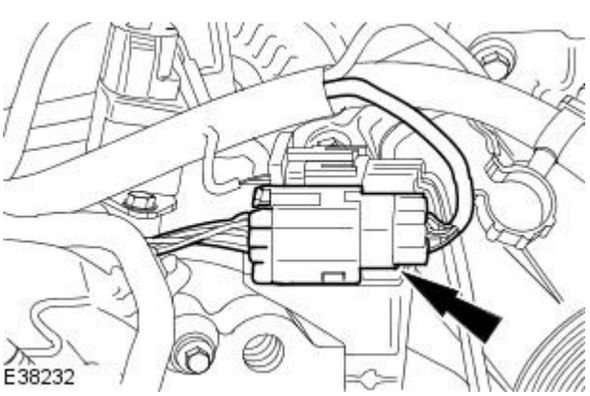

149. Connect the electrical connector.

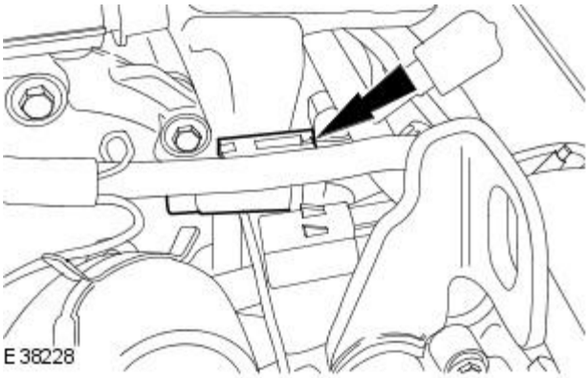

150. Connect the electrical connector.

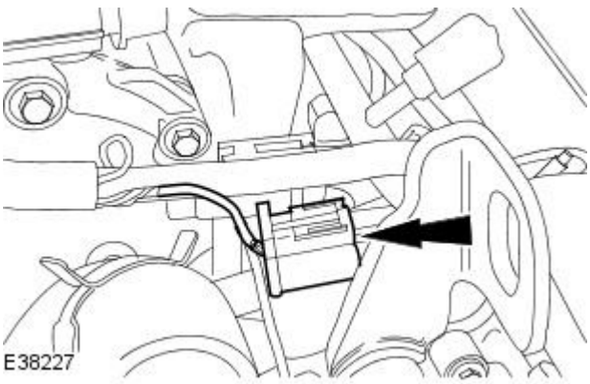

151. Connect the electrical connector.

152. Install the thermostat housing.

- Attach the coolant hose.
- Reposition the retaining clip.

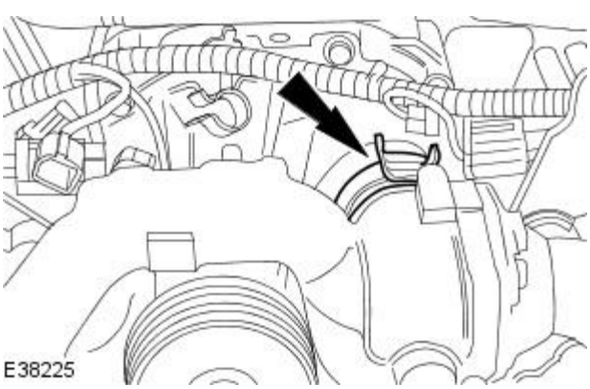

153. Attach the coolant hose.

- Reposition the retaining clip.

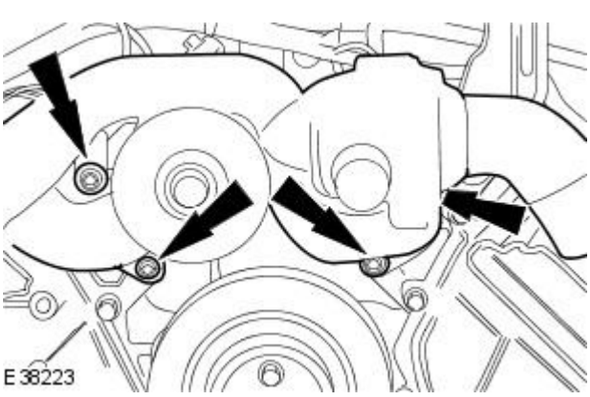

154. Attach the thermostat housing.

- Tighten to 10 Nm.

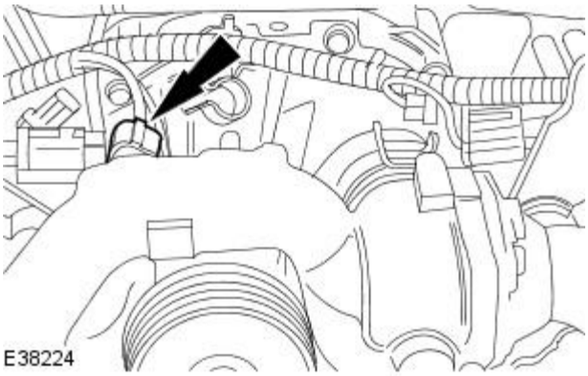

155. Connect the electrical connector.

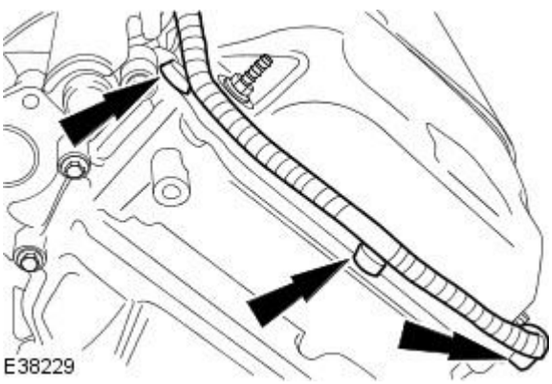

156. Attach the engine wiring harness.

All vehicles

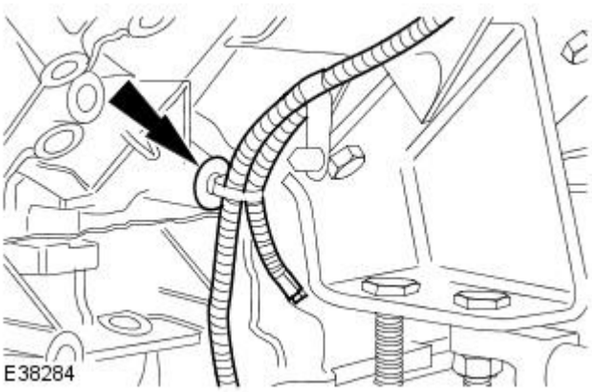

157. Attach the wiring harness.

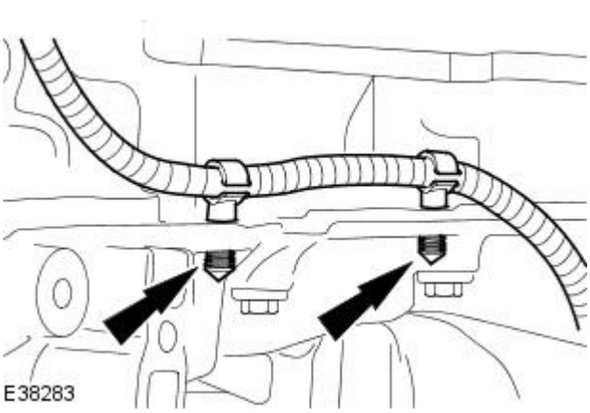

158. Attach the wiring harness.

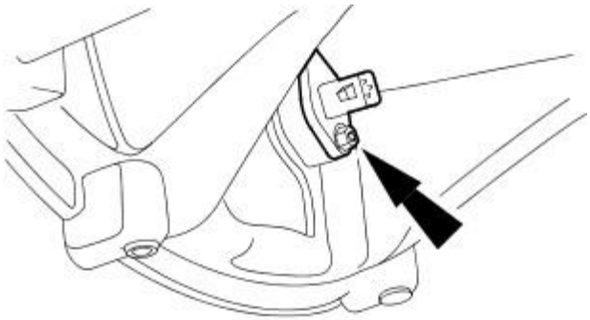

E30694

159. Install the crankshaft position sensor.

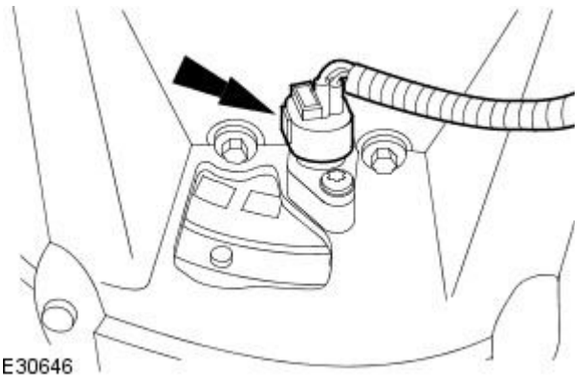

E30646

160. Connect the crankshaft position sensor electrical connector.

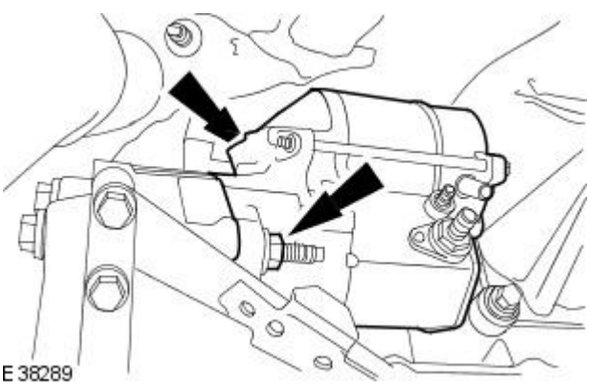

E38289

161. Install the starter motor.

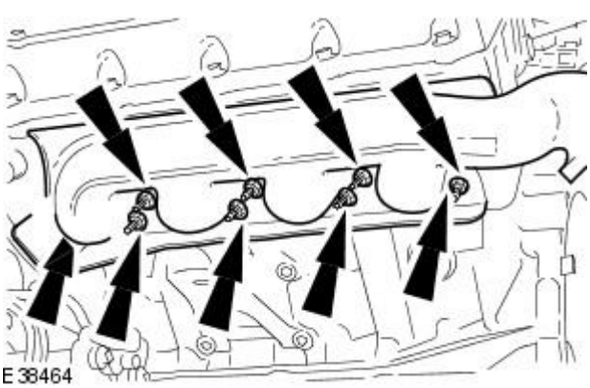

E38464

162. Install the right-hand exhaust manifold.

- Tighten to 25 Nm.

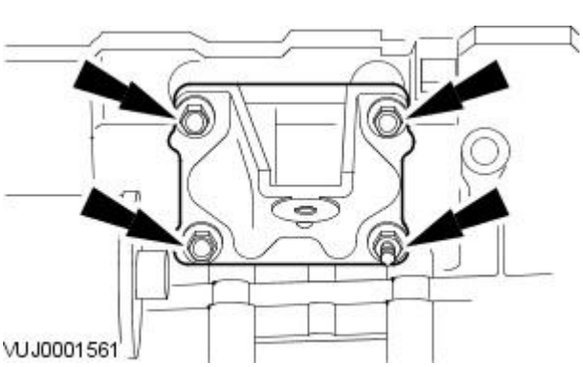

VUJ0001561

163. Install the engine mount bracket.

- Tighten to 40 Nm.

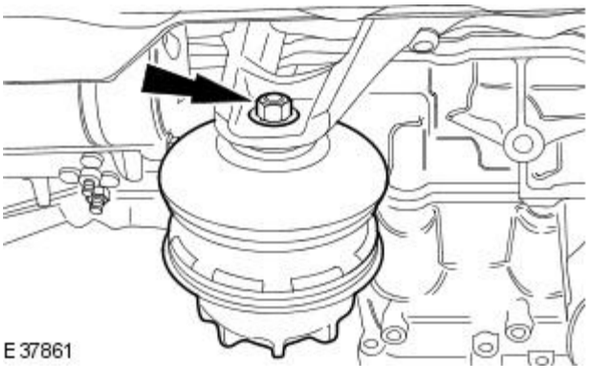

164. Install the engine mount.

- Tighten to 70 Nm.

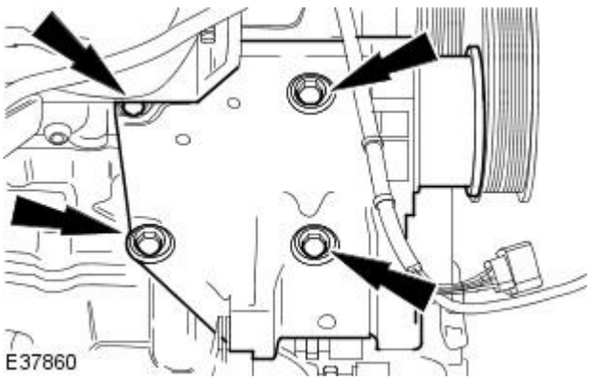

165. Install the mount bracket.

- Tighten to 45 Nm.

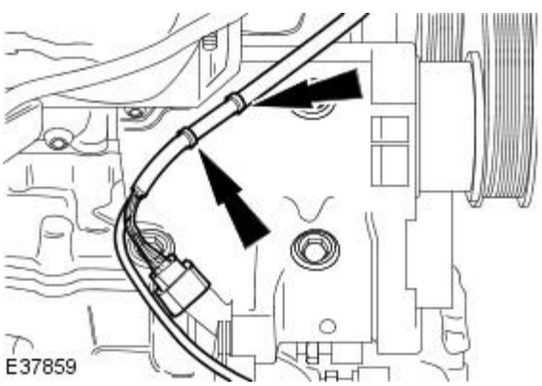

166. Attach the wiring harness.

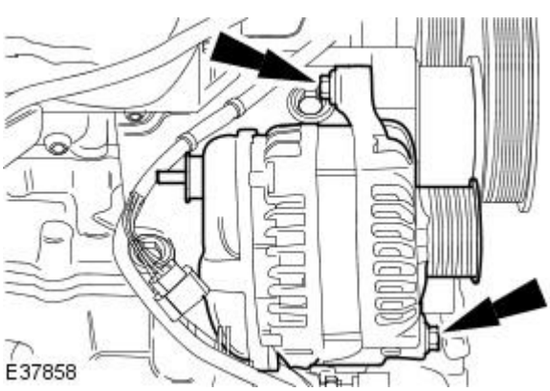

167. Install the generator.

- Tighten the generator upper retaining bolt to 21 Nm.
- Tighten the generator lower retaining bolt to 40 Nm.

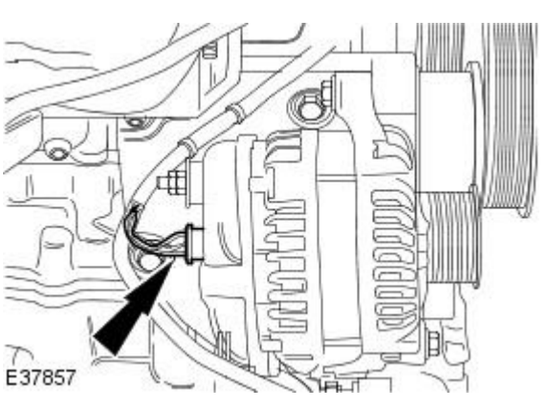

168. Connect the electrical connector.

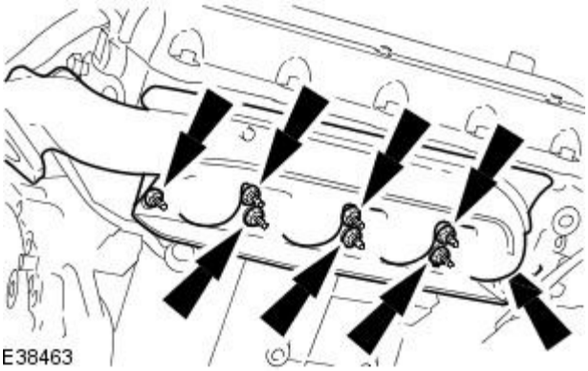

169. Install the left-hand exhaust manifold.

- Tighten to 25 Nm.

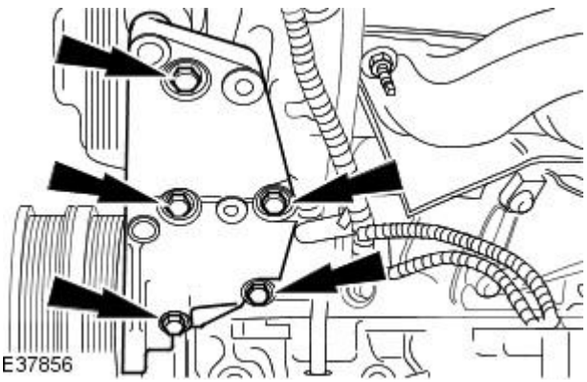

170. Install the mount bracket.

- Tighten to 25 Nm.

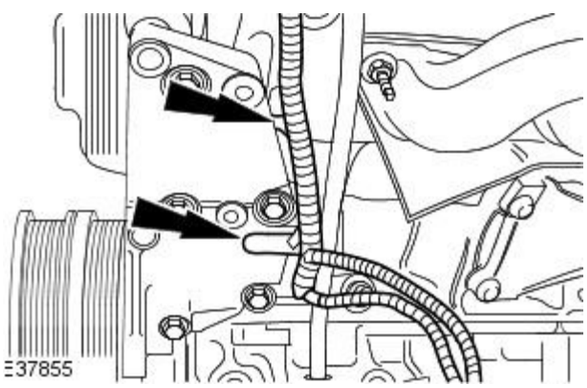

171. Attach the wiring harness.

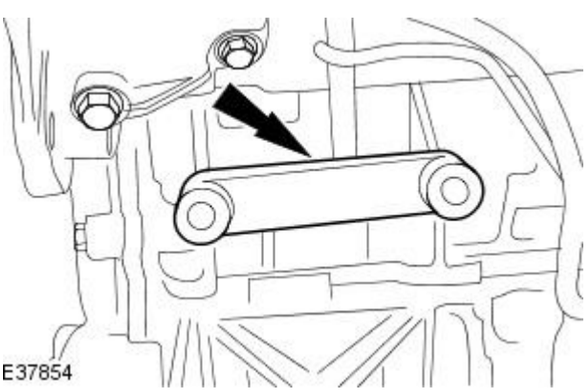

172. Install the mount bracket.

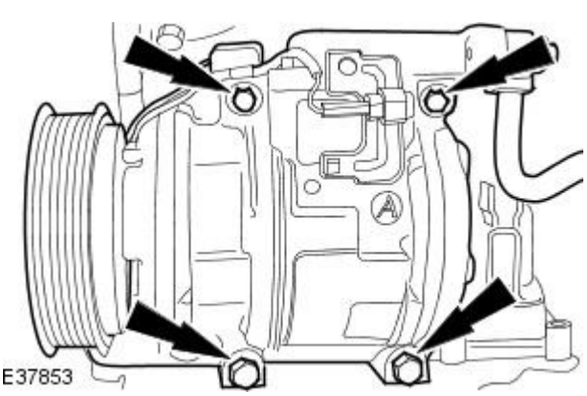

173. Install the air conditioning (A/C) compressor.

- Tighten to 25 Nm.

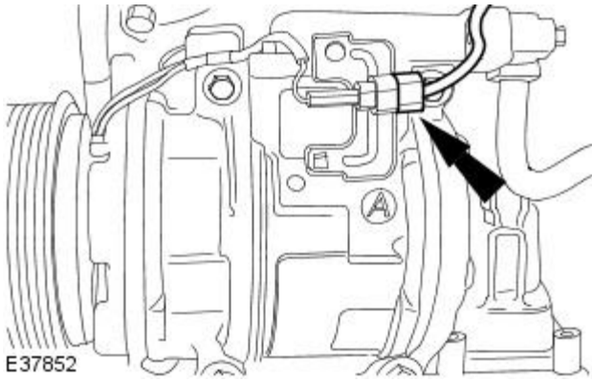

174. Connect the electrical connector.

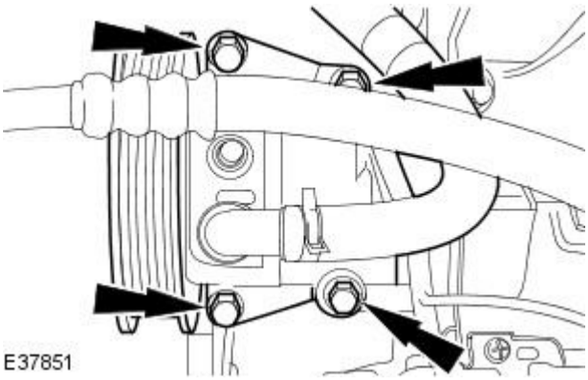

175. Install the power steering pump.

- Tighten to 25 Nm.

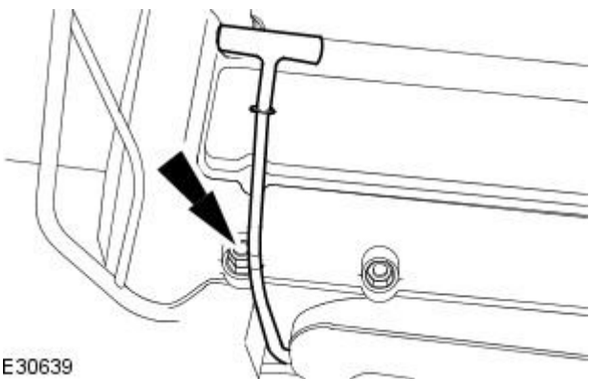

176. Install the oil level indicator and tube.

- Install new O-ring seals.

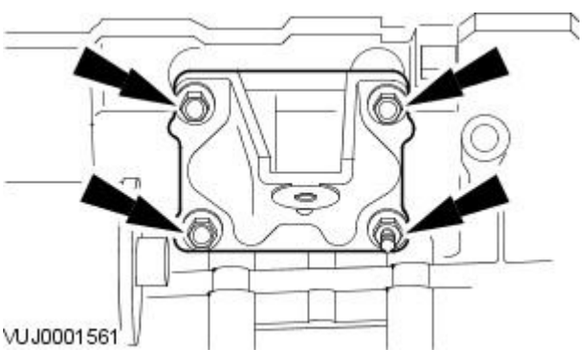

177. Install the engine mount bracket.

- Tighten to 40 Nm.

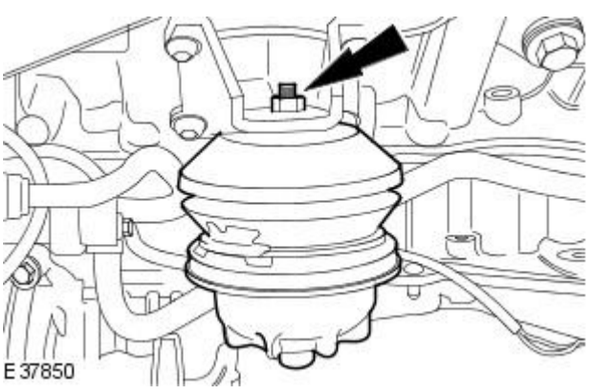

178. Install the engine mount.

- Tighten to 70 Nm.

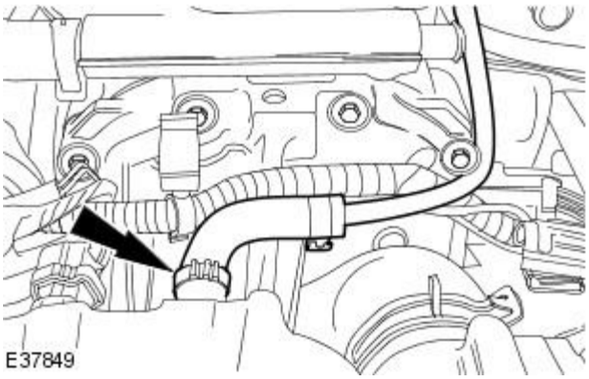

179. Install the coolant hose.

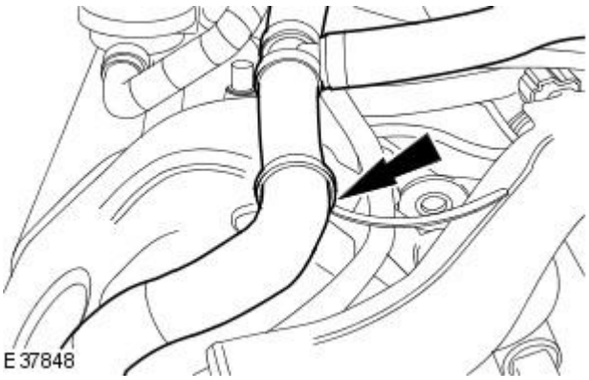

180. Install the coolant hose.

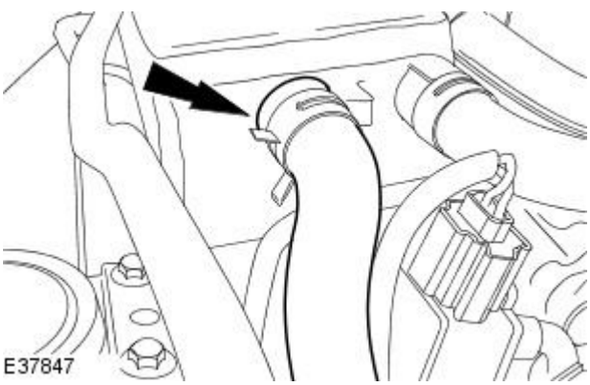

181. Attach the coolant hose.

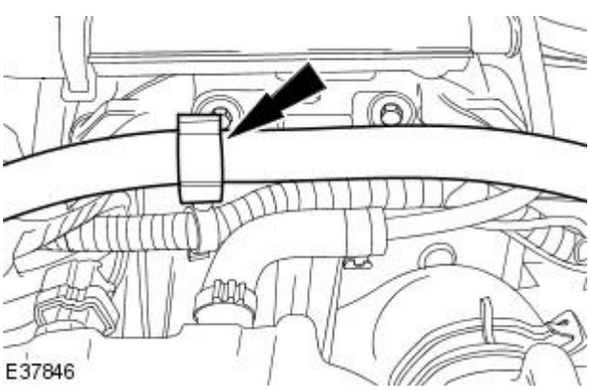

182. Attach the coolant hose.

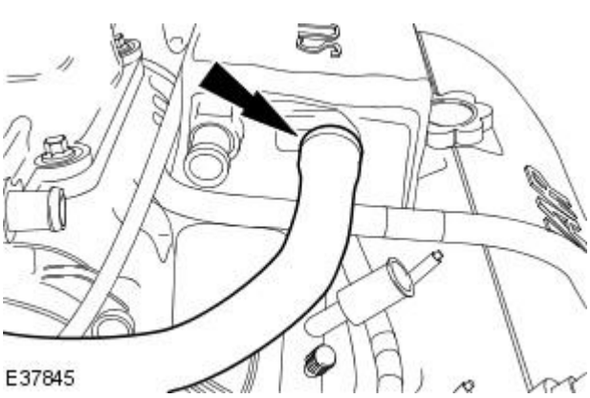

183. Attach the coolant hose.

All vehicles

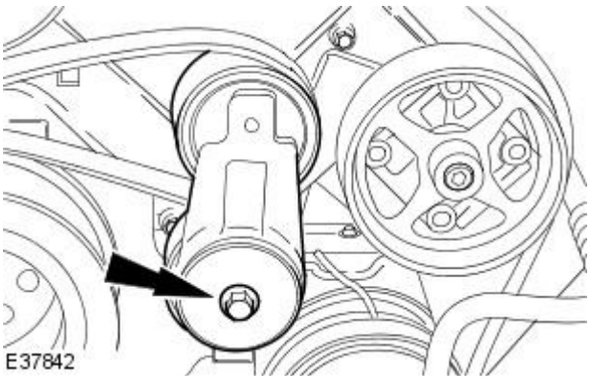

184. Install the drive belt.

- Install the drive belt tensioner.

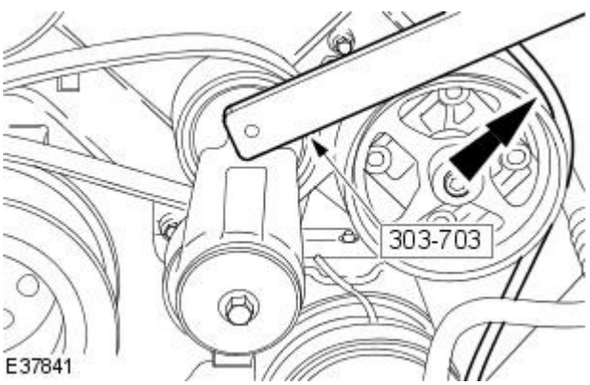

185. Attach the accessory drive belt.

Vehicles with supercharger

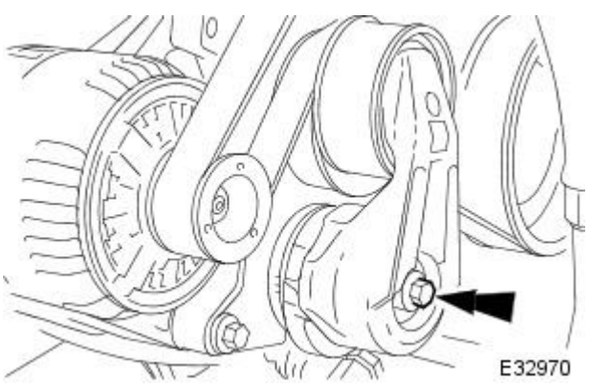

186. Install the supercharger drive belt tensioner.

- Install the super charger drive belt.

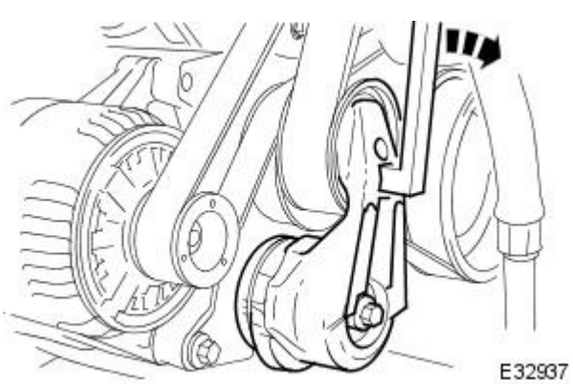

187. Attach the supercharger belt.

- Use a 1/2 inch square drive bar to rotate the supercharger belt tensioner.
- Attach the supercharger belt.

Engine - Engine

Installation

Special Tool(s)	
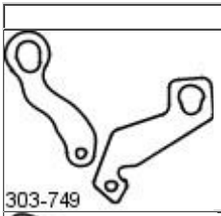 303-749	Engine lifting brackets 303749
303-536	Engine lifting brackets 303536

Installation

1. NOTE: Use high-temperature grease meeting Jaguar specification.

Apply a thin layer of high-temperature grease to the centering spigot bore on the torque converter.

2. CAUTION: Make sure the torque converter hub is correctly installed to the oil pump drive gear throughout the installation procedure. Failiure to follow this instruction may result in damage to the vehicle.

Install the engine using a suitable hydraulic lift.

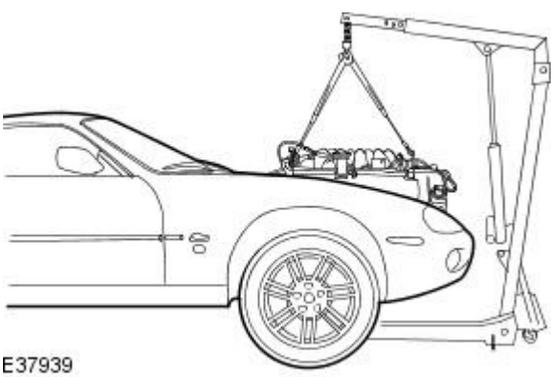

E37939

3. CAUTION: Make sure that the torque converter is free to rotate. Failiure to follow these instruction may result in damage to the vehicle.

Install two opposing engine to automatic gearbox retaining bolts.

4. Install the retaining bolts.

- Tighten to 48 Nm.

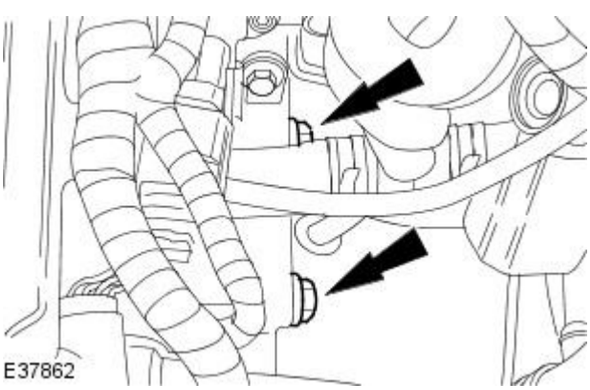

E37862

5. Install the retaining bolts.

- Tighten to 48 Nm.

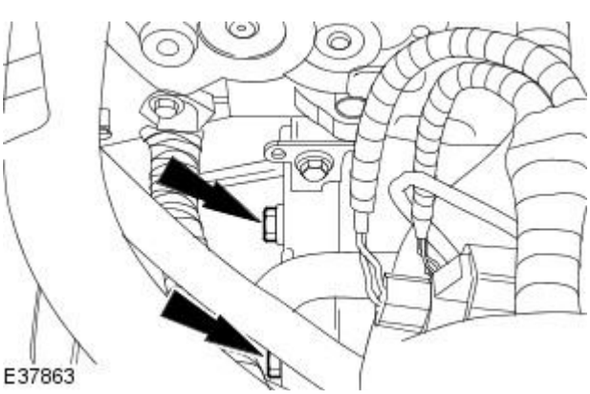

E37863

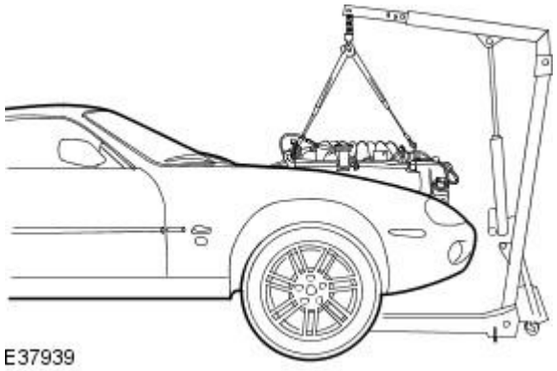

6. CAUTION: Do not support the automatic gearbox on the fluid pan. Failiure to follow these instruction may result in damage to the vehicle.

Lower the engine on to the engine mounts.

- Remove the automatic gearbox support.

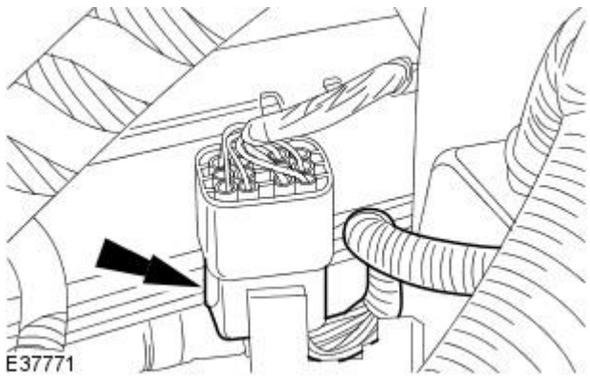

7. Connect the electrical connector.

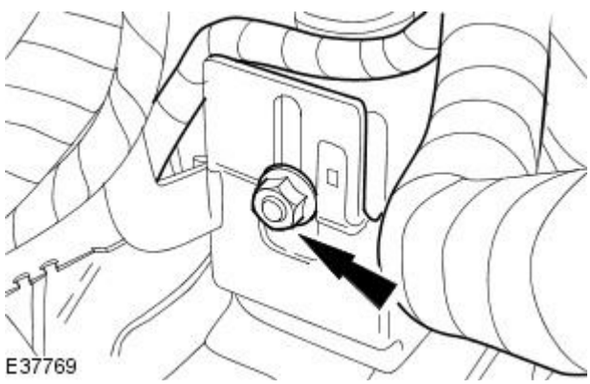

8. Attach the electrical connector.

- Tighten the retaining nut.

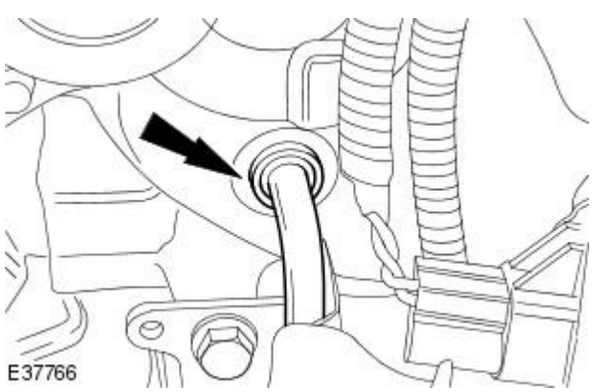

9. Connect the pipe.

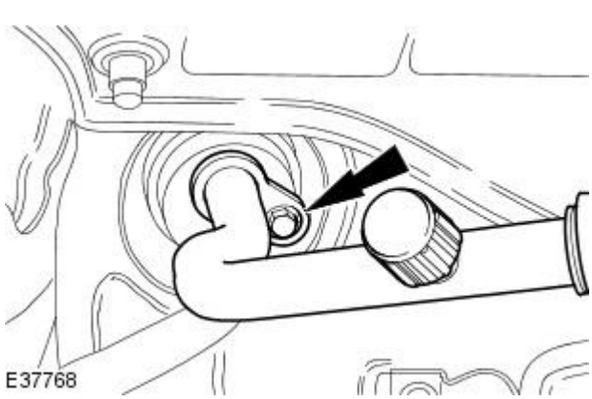

10. NOTE: Uncap the exposed ports.

Install new air conditioning line O-ring seals.

- Lubricate the new 0-ring with A/C refrigerant oil.

11. Clean off any oil residue that may contain A/C system flourescent dye.

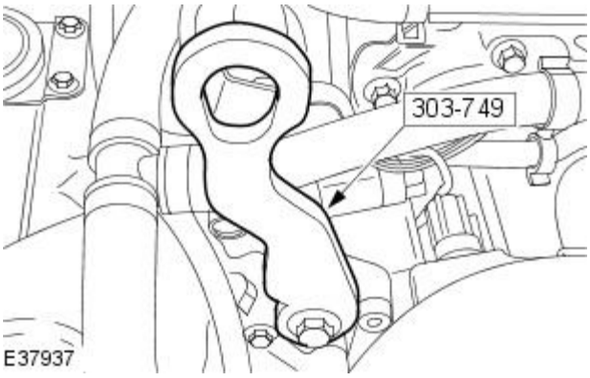

12. Remove the front engine lifting bracket.

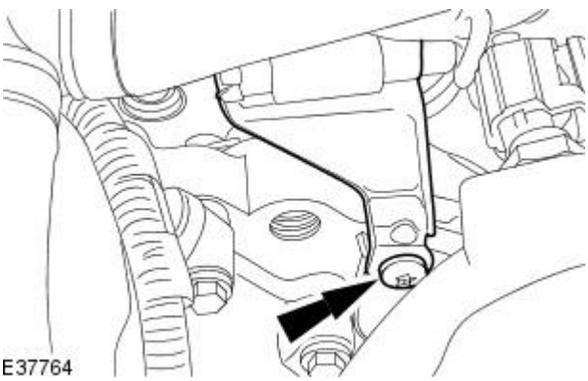

13. Install the retaining bolt.

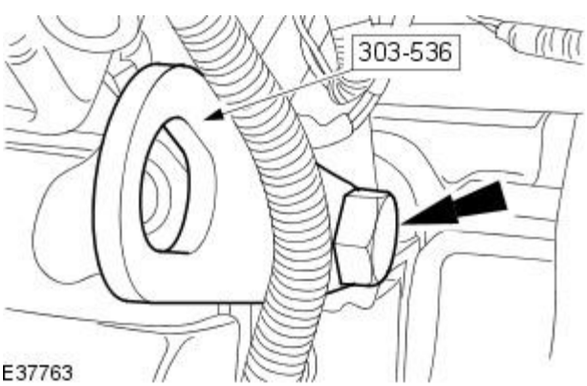

14. Remove the rear engine lifting bracket.

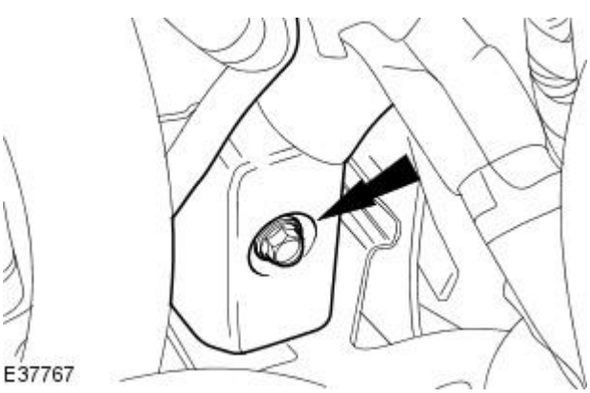

15. NOTE: The electrical connector retaining bolt remains captive in the electrical connector.

Connect the electrical connector.

- Tighten the retaining bolt.

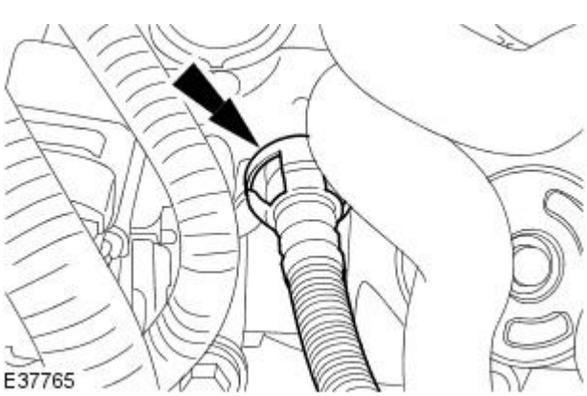

16. Connect the pipe.

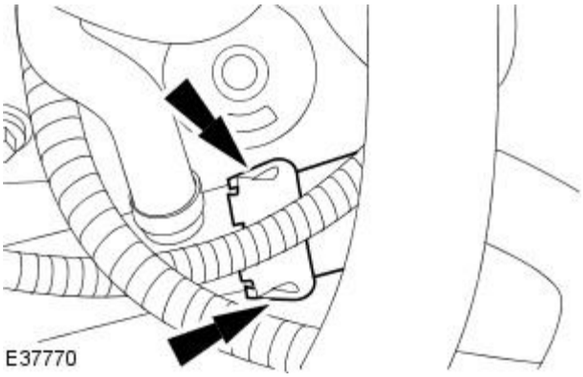

17. Connect the coolant hose.

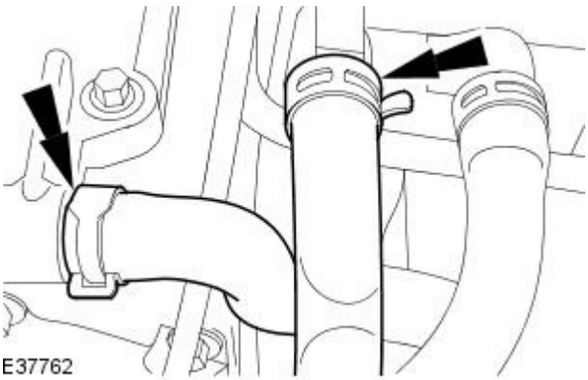

18. Connect the coolant hoses.

19. Connect the fuel line.
For additional information, refer to Section 310-00 Fuel System - General Information.

20. NOTE: Uncap the exposed ports.

Install new air conditioning line O-ring seals.

- Lubricate the new O-ring with A/C refrigerant oil.

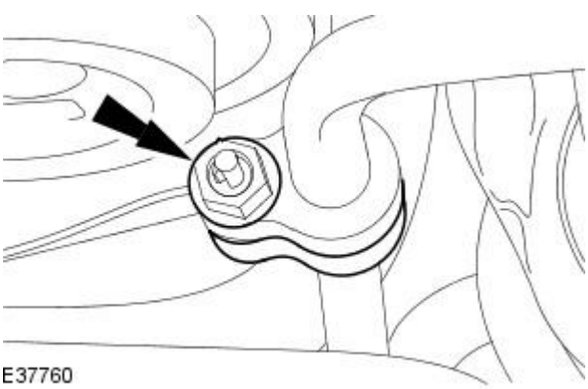

21. NOTE: Uncap the exposed ports.

Connect the air conditioning line.

- Tighten to 12 Nm.

22. Clean off any oil residue that may contain A/C system flourescent dye.

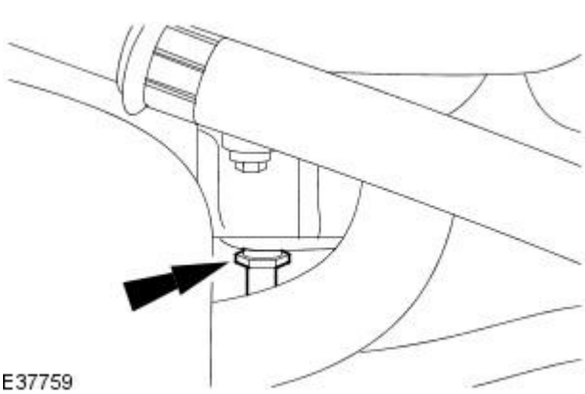

23. CAUTION: If power steering fluid comes into contact with the paintwork, the affected area must be immediately washed down with cold water.

• NOTE: Uncap the exposed ports.

Connect the power steering pump line.

- Tighten to 25 Nm.

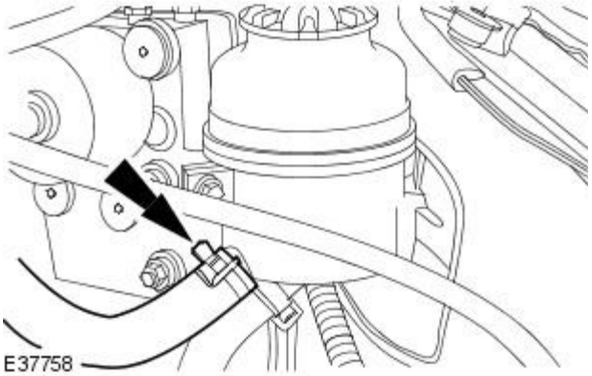

24. CAUTION: If power steering fluid comes into contact with the paintwork, the affected area must be immediately washed down with cold water.

• NOTE: Uncap the exposed ports.

Connect the power steering reservoir hose.

25. Raise the vehicle.

26. NOTE: Left-hand shown, right-hand similar

Install the engine mount retaining bolt.

- Tighten to 70 Nm.

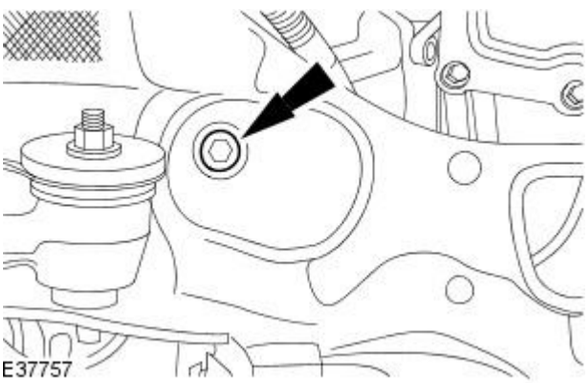

27. Attach the generator cable.

- Tighten to 12 Nm.

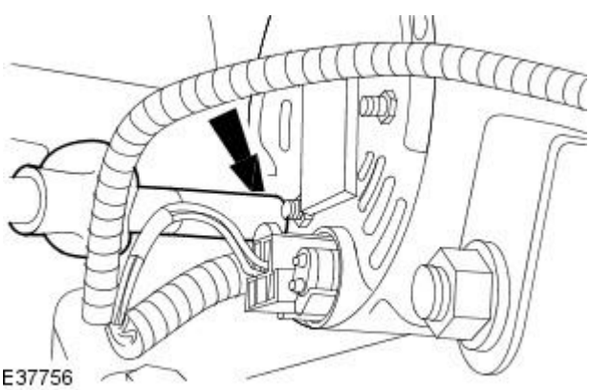

28. Reposition the generator cable cover.

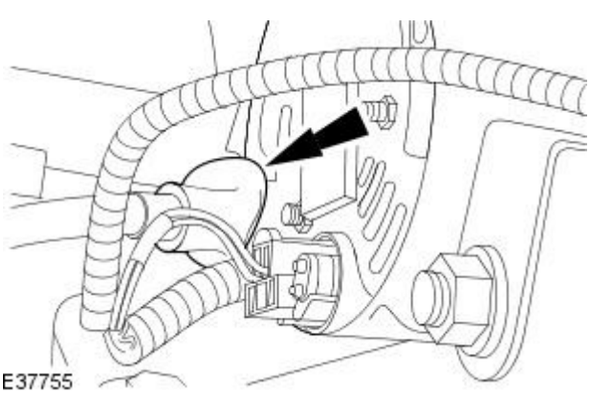

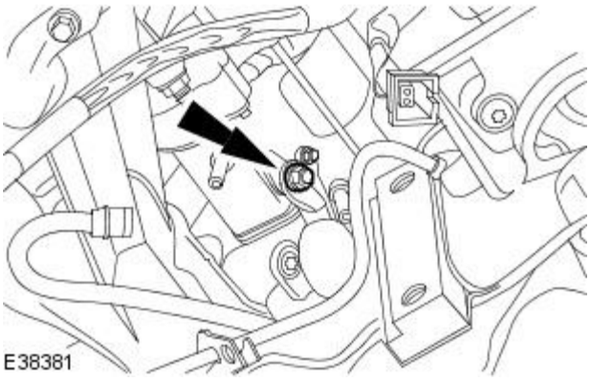

29. Attach the starter motor cable.

- Tighten to 10 Nm.

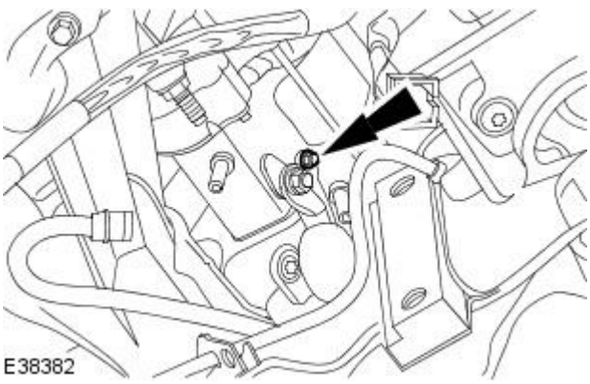

30. Attach the starter motor cable.

- Tighten to 7 Nm.

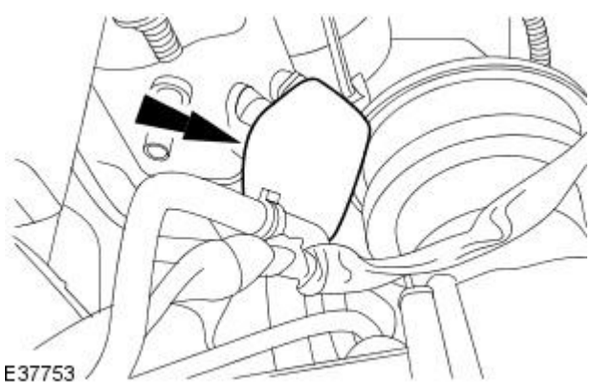

31. Reposition the starter motor cable cover.

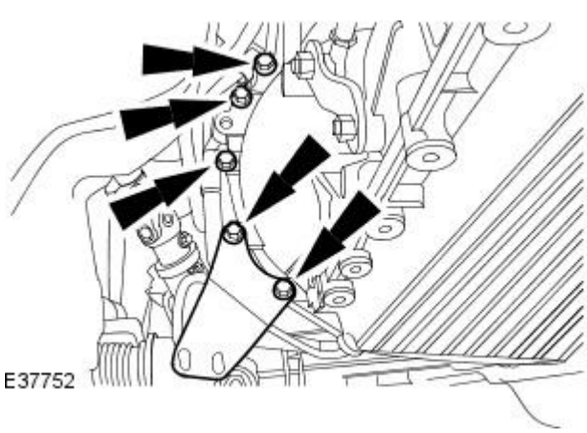

32. Install the retaining bolts.

- Install the mount bracket.
- Tighten to 48 Nm.

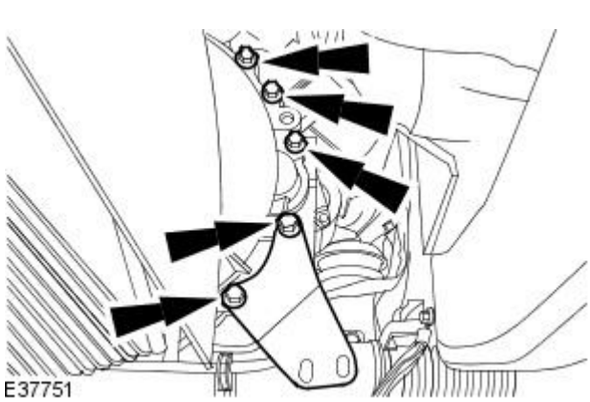

33. Install the retaining bolts.

- Install the mount bracket.
- Tighten to 48 Nm.

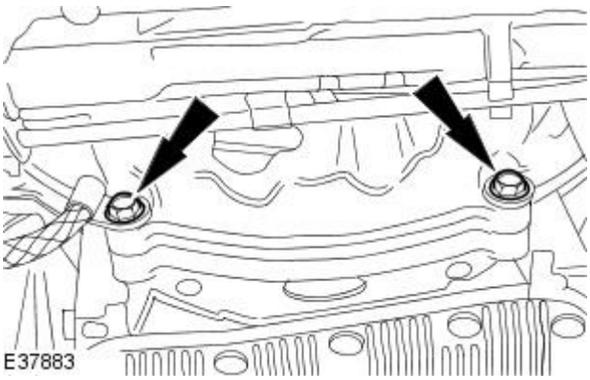

34. Install the retaining bolts.

- Tighten to 48 Nm.

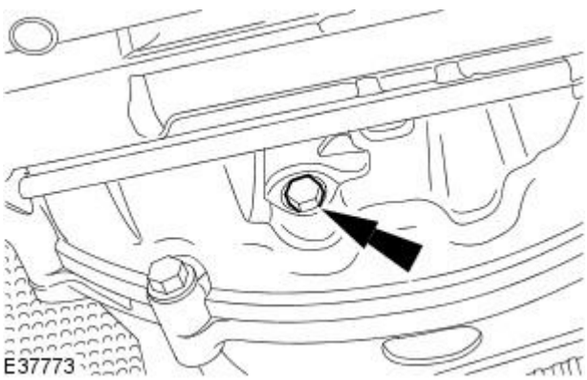

35. Install the retaining bolts.

- Tighten to 55 Nm.
- Rotate the torque converter to gain access to the remaining bolts.

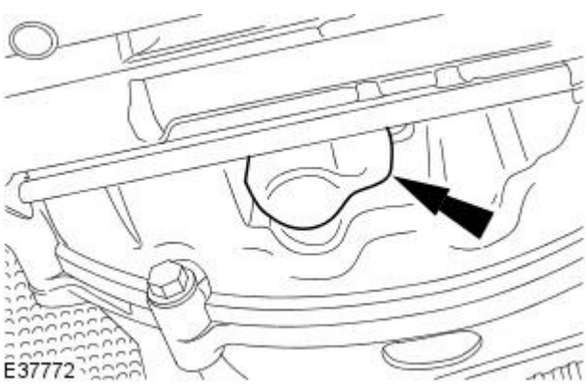

36. Install the rubber access cover.

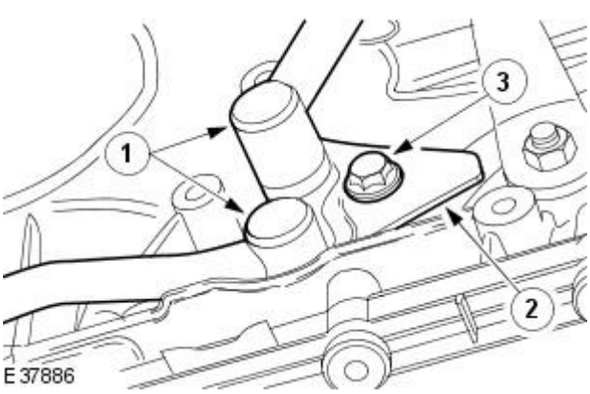

37. Install the retaining bolt.

1. Attach the transmission fluid cooler tubes to the automatic transmission.
2. Install the retaining plate.
3. Install the retaining bolt.

- Tighten to 23 Nm.

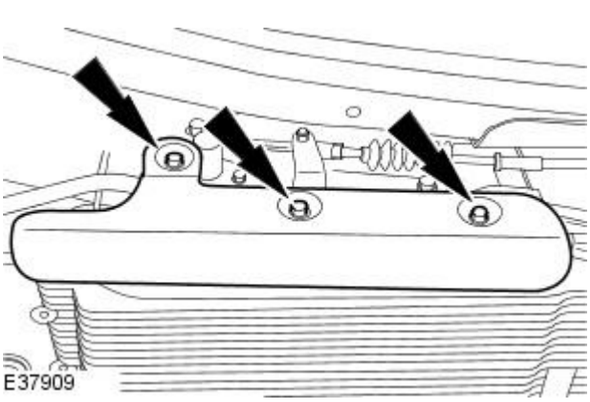

38. Install the transmission heat shield.

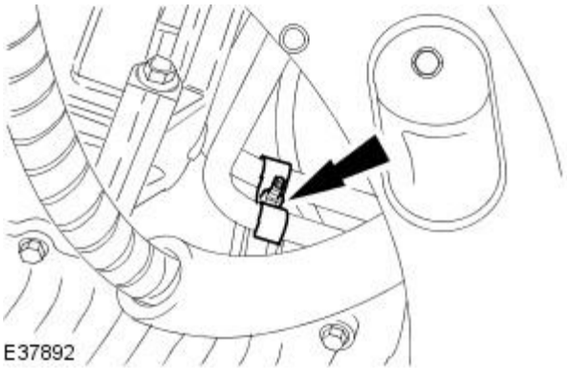

39. Detach the transmission fluid cooler tubes.

40. Install the catalytic converters.
For additional information, refer to Section 309-00 Exhaust System.

41. Install the radiator. For additional information, refer to Section 303-03A Engine Cooling / 303-03B Supercharger Cooling.

42. Carry out the A/C system evacuation and charging procedure.
For additional information, refer to Section 412-00 Climate Control System - General Information.

43. Bleed the power steering system.
For additional information, refer to Section 211-00 Steering System - General Information.

44. Carry out a transmission fluid level check.
For additional information, refer to Transmission Fluid Level Check in this section.

Engine Cooling -

Lubricants, Fluids, Sealers and Adhesives

Description	Specification
Jaguar Premium Cooling System Fluid	WSS M97B44-D
Jaguar Premium Cooling System Flush	EGR-M14P7-A
Jaguar Premium Cooling System Flush	164-R3670

Cooling System Refill Capacities

Engine	Capacity
4.2L - Vehicles without supercharger	9.5 Litres
4.2L - Vehicles with supercharger	11.5 Litres

Torque Specifications

Description	Nm	lb-ft	lb-in
Coolant expansion tank retaining nut	3	-	27
Cooling fan motor and shroud retaining nuts	4	-	35
Thermostat housing retaining bolts	9	-	80
Water pump retaining bolts	A	-	-
Water pump drive pulley retaining bolts	A	-	-
Radiator drain plug	1	-	9
Radiator retaining bracket	10	7	-
Filler plug - Vehicles with supercharger	45	33	-
A = refer to the procedure for the correct torque sequence	-	-	-

Published: 11-May-2011

Engine Cooling - Engine Cooling

Description and Operation

Engine Cooling Components

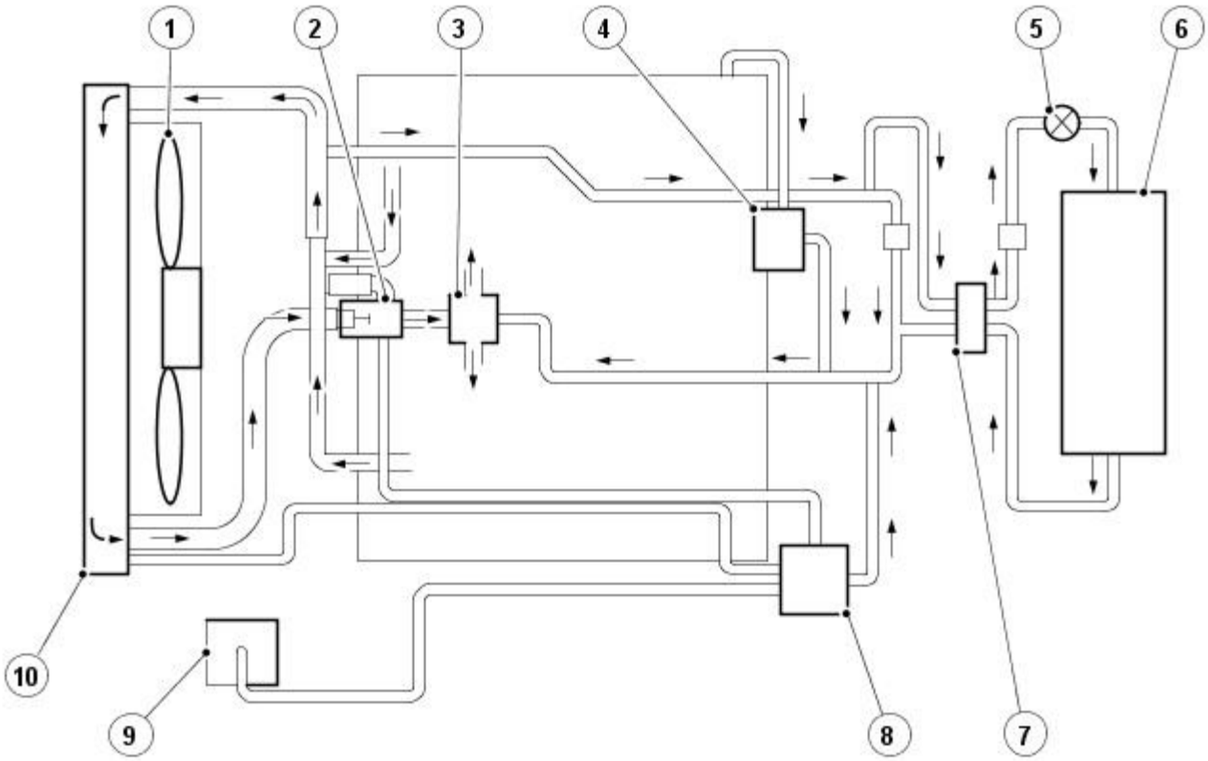

E37567

Item	Description
1	Cooling fan motors and shroud
2	Thermostat housing
3	Water pump
4	Throttle body
5	Heater water pump
6	Heater core
7	Water valve
8	Expansion tank
9	Degas bottle
10	Radiator

Engine cooling is via a low volume, high velocity system which achieves a very fast warm up. The temperature of the combustion chambers is reduced along with a more even temperature distribution. The temperature of the bores is increased.

From the pump, coolant flows into each bank of the cylinder block. In each bank, approximately 50% of the coolant cools the cylinder bores and the remainder is diverted through the bypass gallery to the cylinder head.

With the thermostat closed, coolant returns directly to the pump through the bypass on the thermostat housing.

With the thermostat open, coolant returns to the pump via the radiator.

The cooling system uses a mixture of soft water and Jaguar Anti-Freeze/Inhibitor (WSS M97B44-D).

Drain Location

A coolant drain plug is located at the rear of the cylinder block behind the starter motor.

Coolant Pump and Flow Control

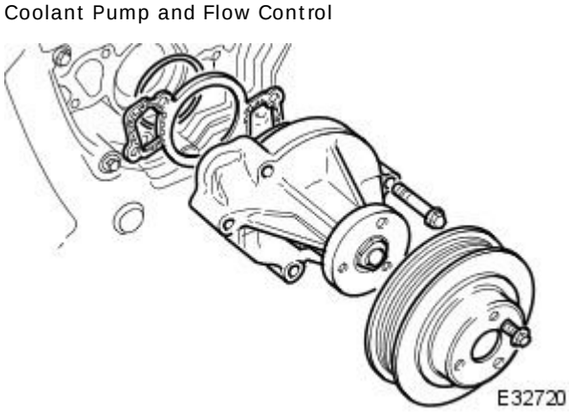

E32720

The water pump is fitted between the two cylinder banks, on the front face of the cylinder block.

The pump consists of a housing containing a shaft, with a shrouded plastic impeller on one end and a drive pulley on the other.

A pair of roller bearings support the shaft in the housing. A seal behind the impeller prevents coolant from contaminating the bearings. Should this seal fail, coolant escapes from a witness hole in the housing indicating that immediate action is required.

An O-ring and an aluminum-alloy gasket, seal the ports between the pump and the cylinder banks.

Coolant Outlet Duct - vehicles without supercharger

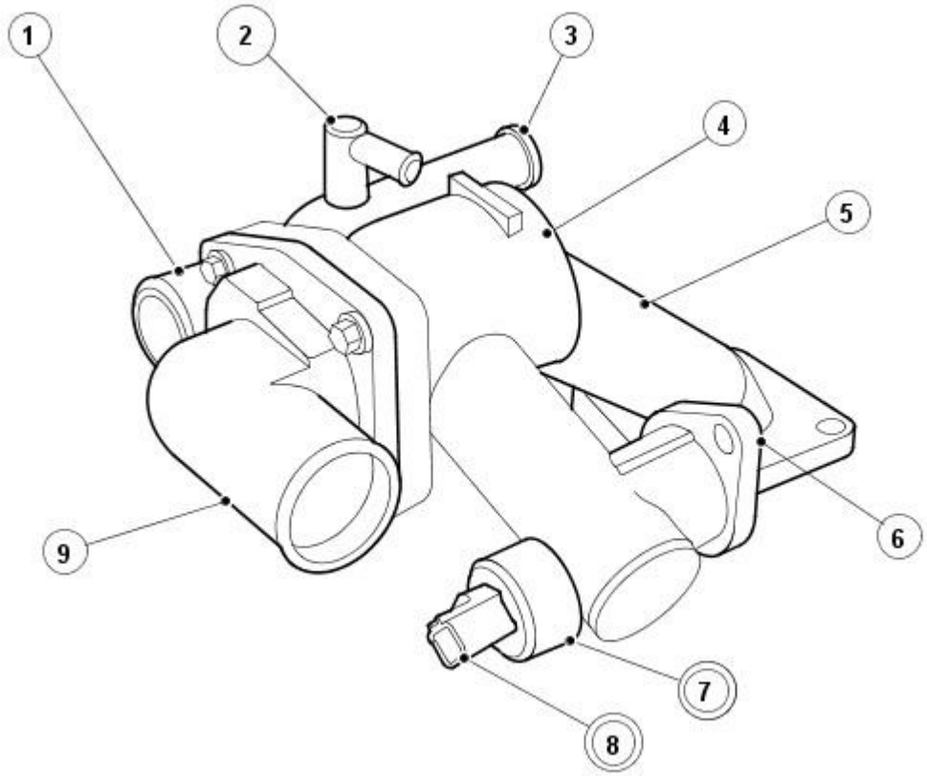

E38089

Item	Description
1	Bottom hose connection
2	Vent to expansion tank
3	Heater core hose connection
4	Thermostat housing
5	Bypass to water pump
6	Outlet to cylinder head
7	Rubber insulation boot
8	Engine coolant temperature (ECT) sensor
9	Thermostat cover

A coolant outlet plastic pipe connects to the outlet port of each cylinder head to provide a common connection point for the radiator top hose. It also incorporates the engine coolant temperature (ECT) sensor which provides a signal representing coolant temperature at the cylinder heads. Controlling the coolant flow through the radiator, the thermostat starts to open at 80° to 84°C and is fully open at 96°C. The outlet pipe has connections to supply the heater core and the bypass flow to the thermostat housing. An in-groove gasket, seals each of the outlet-to-cylinder head joints. An aluminium gasket seals the ECT sensor to thermostat housing.

Coolant Outlet Duct - vehicles with supercharger

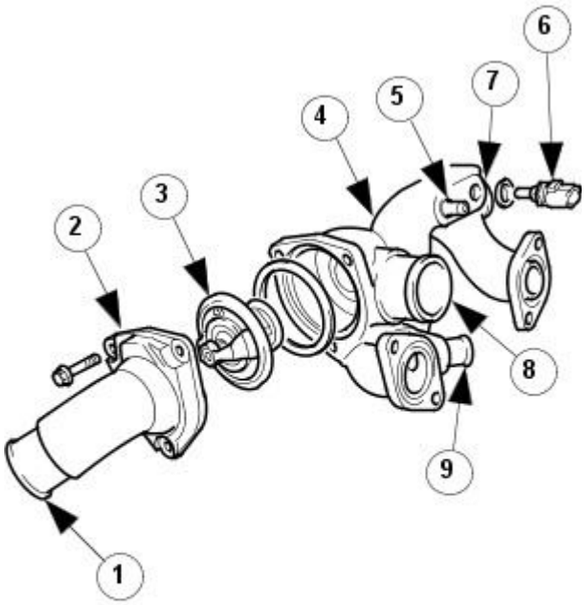

E32942

Item	Description
1	Bottom hose connection
2	Thermostat cover
3	Thermostat
4	Coolant outlet duct
5	Breather connection
6	Engine coolant temperature (ECT) sensor
7	Top hose connection
8	Bypass to water pump
9	Heater core hose connection

The coolant outlet duct on the supercharged engine performs exactly the same function as on the normally aspirated engine and connects to the same ports on the engine. The main physical difference is that the thermostat housing has been combined with the outlet duct and consequently, there is no separate housing assembly fitted above the water pump, as used on the normally aspirated engine.

A duct in the cylinder block connects the thermostat housing outlet to the water pump inlet. The joint between the thermostat housing and the cylinder block is via an in-groove seal.

Radiator

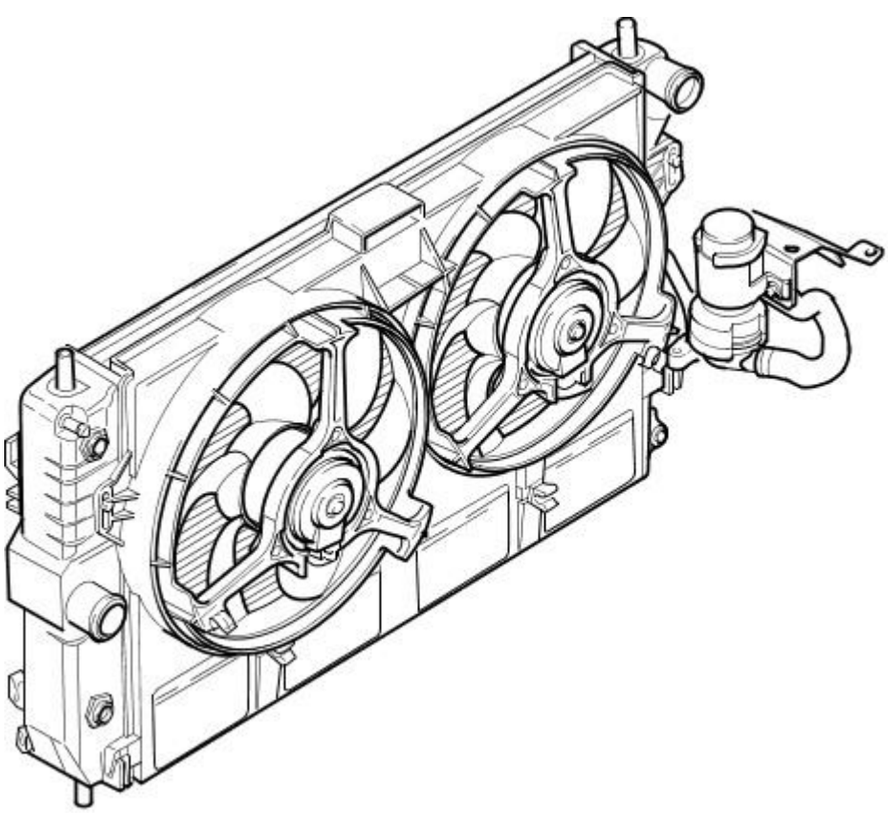

E33907

The cooling pack incorporates the radiator assembly with integral transmission oil cooler (located in the radiator outlet tank), an air conditioning condenser, and the twin fan and motor assembly.

The cooling pack on supercharged vehicles is the same as described above, but with the addition of a charge air cooler coolant radiator

located in front of the condenser.

Radiator Mounting

The radiator is mounted on four rubber mounts, one on each end of the upper and lower face. A closing panel which retains the radiator assembly, fits over the top of the radiator and is secured to the vehicle body.

Coolant Expansion Tank and Degas Bottle

A coolant recovery system is used, which comprises a coolant expansion tank and degas bottle. The degas bottle is located at the rear of the right hand front wheel arch.

The expansion tank provides the cooling system filling point and carries the coolant level sensor. The pressure cap allows controlled release of coolant to the degas bottle during normal operation.

The degas bottle accommodates the expansion of the system coolant during normal operation. On engine cool-down, the coolant contracts and is returned to the main system.

Cooling Fans

The two radiator cooling fans are mounted in a twin fan and motor assembly between the radiator and the engine.

The fans are controlled by the fan control module dependent on the demand from the cooling system (temperature) or the air conditioning system (pressure).

The fan control module is located on the twin fan and motor shroud. The fan speeds are controlled by the variable pulse width modulated (PWM) module.

Under hot operating conditions, the fans may continue to operate for some time after the engine has been switched off, but will stop automatically when the coolant temperature has been sufficiently reduced.

Engine Coolant Temperature Sensor (ECT) vehicles without supercharger.

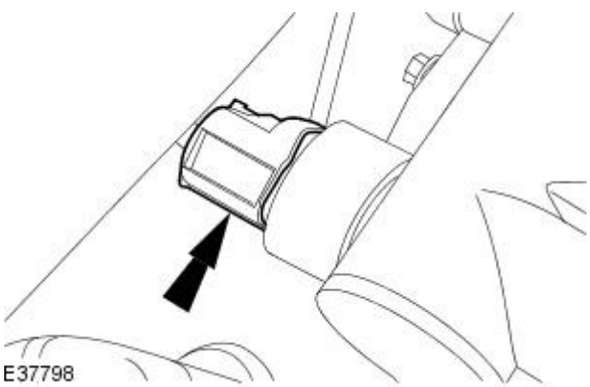

Engine Coolant Temperature Sensor (ECT) vehicles with supercharger.

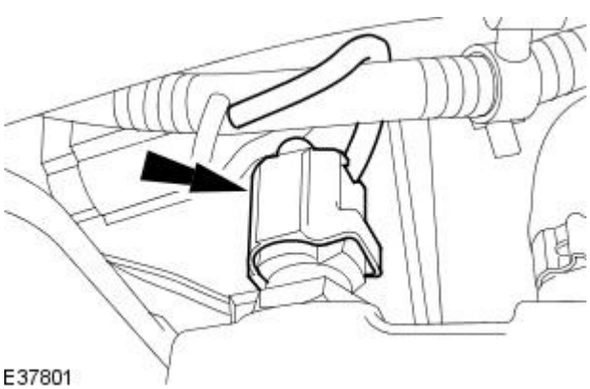

The engine coolant temperature (ECT) sensor is located in the coolant outlet pipe and reacts to engine coolant temperature changes, providing an input to the Engine Control Module (ECM). The sensor has a negative temperature coefficient so that the sensor resistance decreases as temperature rises.

Engine Cooling - Cooling System Draining, Filling and Bleeding

General Procedures

All vehicles

1. WARNINGS:

Never remove the coolant pressure cap under any circumstances while the engine is operating. Failure to follow this instruction may result in personal injury.

To avoid having scalding hot coolant or steam blow out of the cooling system, use extreme care when removing the coolant pressure cap from a hot cooling system. Wait until the engine has cooled, then wrap a thick cloth around the coolant pressure cap and turn it slowly until the pressure begins to release. Step back while the pressure is released from the system. When certain all the pressure has been released (still with a cloth) turn and remove the coolant pressure cap from the coolant expansion tank. Failure to follow these instructions may result in personal injury.

To avoid the possibility of personal injury, do not operate the engine with the hood open until the fan blades have been examined for cracks and separation. Failure to follow this instruction may result in personal injury.

Remove fuse 14 from the engine management fuse box prior to performing any under hood service in the area of the cooling fan when the engine is hot, since the cooling fan motor could operate if the engine has been switched OFF. Failure to follow this instruction may result in personal injury.

• CAUTIONS:

The engine cooling system must be maintained with the correct concentration and type of anti-freeze solution to prevent corrosion and frost damage.

Never remove the coolant pressure cap under any circumstances while the engine is operating. Failure to follow this instruction may result in damage to the engine.

Release the cooling system pressure.

- Remove the expansion tank cap.

2. Remove the coolant expansion tank cap.

3. Raise and support the vehicle.
For additional information, refer to Section 100-02 Jacking and Lifting.

4. Remove the generator lower cooling duct.

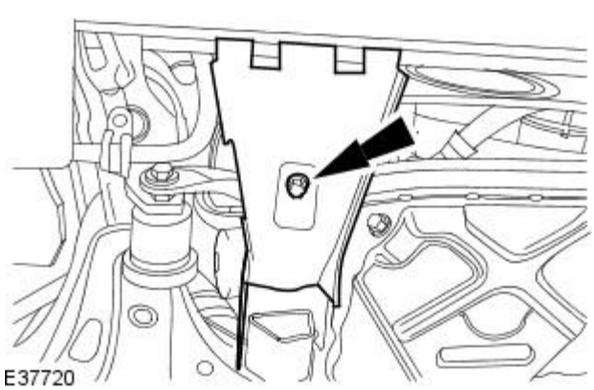

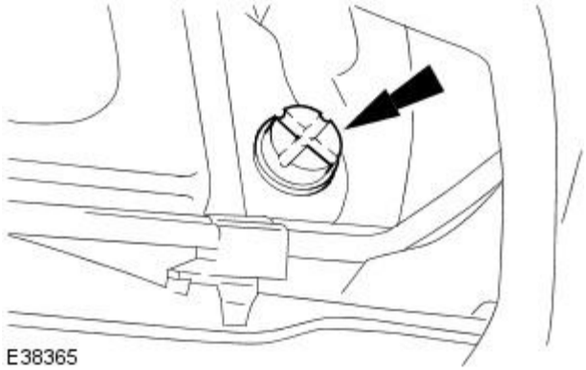

5. Drain the coolant

1. Remove the radiator drain plug.

- Drain the coolant into a suitable container.
- Clean off any spillages.

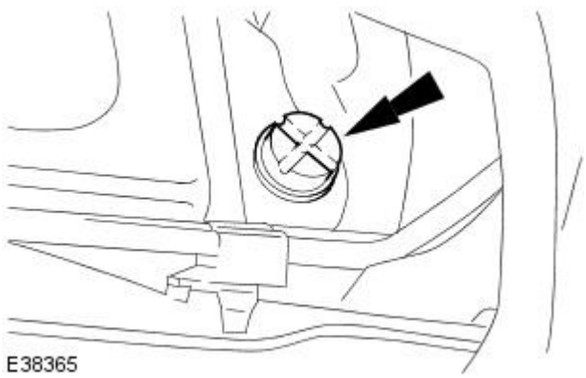

6. CAUTION: Do not over tighten the radiator drain plug. Failure to follow this instruction may cause damage to the vehicle.

• NOTE: Clean any coolant from the underside of the vehicle.

Install the radiator drain plug when all coolant has drained.

- Remove the drain tray.

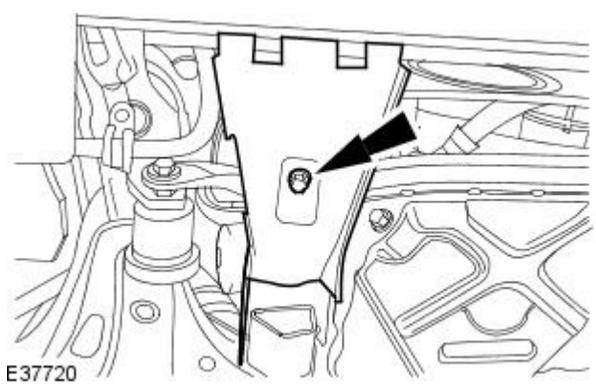

7. Install the generator lower cooling duct.

8. Lower the vehicle.

9. CAUTION: The cooling system must be maintained with the correct concentration and type of coolant solution to prevent corrosion and frost damage.

• NOTE: Jaguar recommends filling the cooling system with softened water.

Fill the cooling system up to the MAX mark on the coolant expansion tank using a fifty percent mixture of Jaguar Premium Cooling System Fluid or equivalent, meeting Jaguar specification WSS M97B44-D and fifty percent water.

10. Install the coolant expansion tank pressure cap.

Vehicles with supercharger

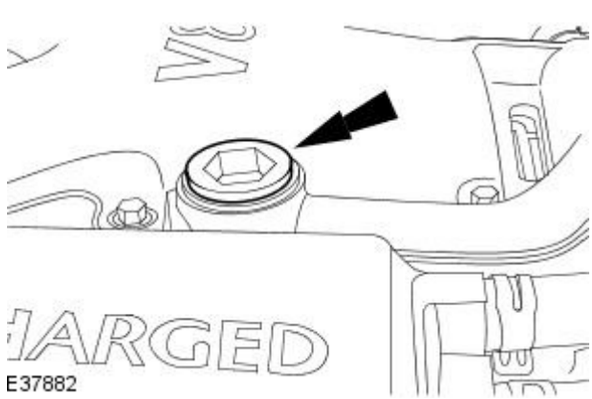

11. Remove the supercharger coolant filler plug.

- Remove and discard the sealing washer.

12. NOTE: Place a suitable cloth around supercharger fill port.

• NOTE: Jaguar recommends filling the cooling system with softened water.

Top up the coolant through the supercharger fill port.

13. CAUTION: Coolant may spill from supercharger fill port when ignition is switched on.

Switch ignition on.

14. Allow the supercharger pump to run and top up the coolant through supercharger fill port.

15. Switch the ignition off.

16. Install the supercharger coolant fill plug.

- Install a new sealing washer.
- Tighten to 45 Nm.
- Clean off any spillages.

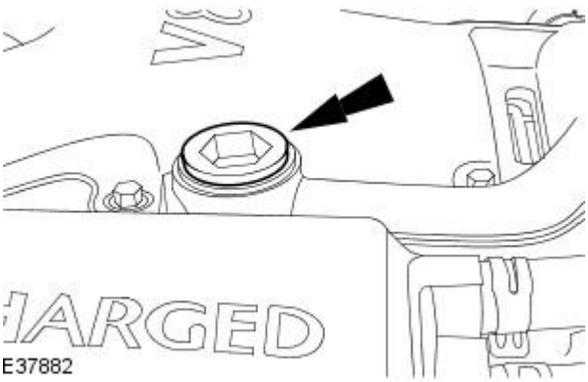

All vehicles

17. CAUTIONS:

Install fuse 14 to the engine management fuse box. Failure to follow this instruction may result in damage to the vehicle.

Do not RUN the engine with the coolant expansion tank pressure cap removed. Failure to follow this instruction may cause damage to the vehicle.

START and RUN the engine.

18. SET the heating system to MAX heat, the blower motor to MAX speed and the air distribution to instrument panel registers.

19. CAUTION: Observe the engine temperature gauge. If the engine rises above normal operating temperature switch off immediately and allow to cool. Failure to follow this instruction may cause damage to the vehicle.

Allow the engine to RUN until hot air is emitted from the instrument panel registers, while observing the engine temperature gauge.

20. Switch off the engine.

21. Allow the engine to cool.

22. Release the cooling system pressure.

- Remove the coolant expansion tank pressure cap.

23. CAUTION: The cooling system must be maintained with the correct concentration and type of coolant solution to prevent corrosion and frost damage.

• NOTE: Jaguar recommends filling the cooling system with softened water.

Fill the cooling system up to the MAX mark on the coolant expansion tank using a fifty percent mixture of Jaguar Premium Cooling System Fluid or equivalent, meeting Jaguar specification WSS M97B44-D and fifty percent water.

24. Install the coolant expansion tank pressure cap.

Engine Cooling - Cooling System Draining and Vacuum Filling

General Procedures

• NOTE: Vehicles fitted with supercharged engines shown, V8 NA and V6 engines similar.

All vehicles

1. WARNING: To avoid having scalding hot coolant or steam blowing out of the cooling system, use extreme care when removing the coolant pressure cap from a hot cooling system. Wait until the engine has cooled, then wrap a thick cloth around the coolant pressure cap and turn it slowly until the pressure begins to release. Step back while the pressure is released from the system. When certain all the pressure has been released (still with a cloth) turn and remove the coolant pressure cap from the coolant expansion tank. Failure to follow these instructions may result in personal injury.

• CAUTIONS:

The engine cooling system must be maintained with the correct concentration and type of anti-freeze solution to prevent corrosion and frost damage. Failure to follow this instruction may result in damage to the vehicle.

Engine coolant will damage the paint finished surfaces. If spilt, immediately remove the coolant and clean the area with water.

Set the heater controls to maximum HOT.

2. WARNING: Relieve the cooling system pressure by unscrewing the coolant pressure cap. Failure to follow this instruction may result in personal injury.

Remove the coolant expansion tank pressure cap.

3. WARNING: Do not work on or under a vehicle supported only by a jack. Always support the vehicle on safety stands.

Raise and support the vehicle.

4. Remove the generator lower cooling duct.

- Remove the screw.

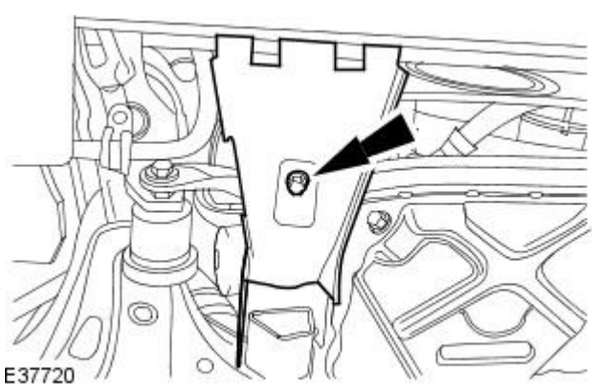

5. NOTE: Remove and discard the radiator drain plug O-ring seal.

Remove the radiator drain plug.

- Drain the coolant into a suitable container.

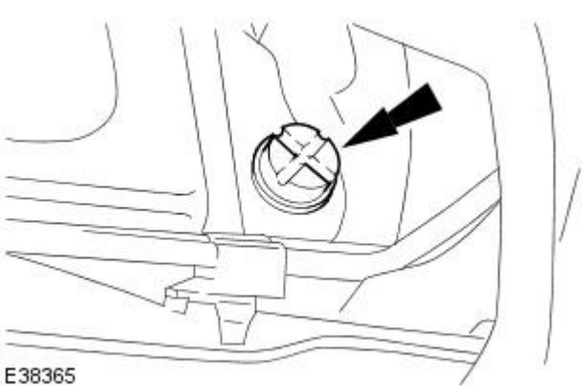

6. Allow the coolant to drain.

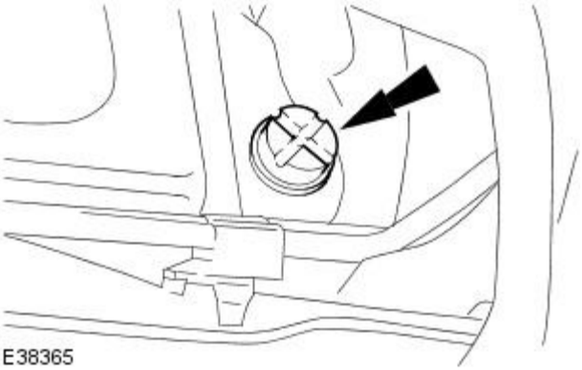

7. CAUTION: Do not over tighten the drain plug. Failure to follow this instruction may result in damage to the vehicle.

• NOTE: Install a new O-ring seal.

Install the radiator drain plug.

- Remove the drain tray.

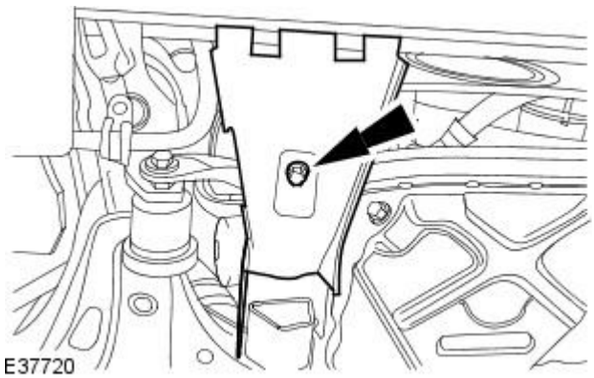

8. Install the generator lower cooling duct.

Vehicles with supercharger

9. Remove the supercharger radiator drain plug.

- Drain the coolant into a suitable container.

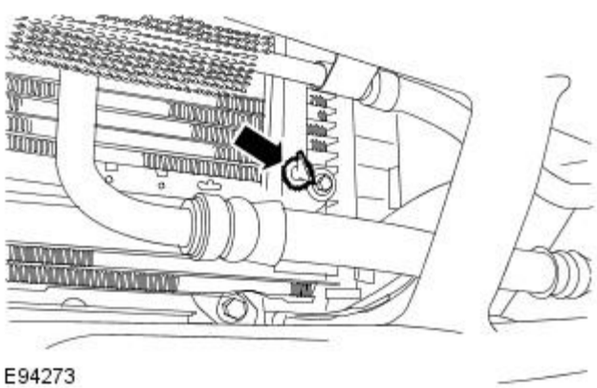

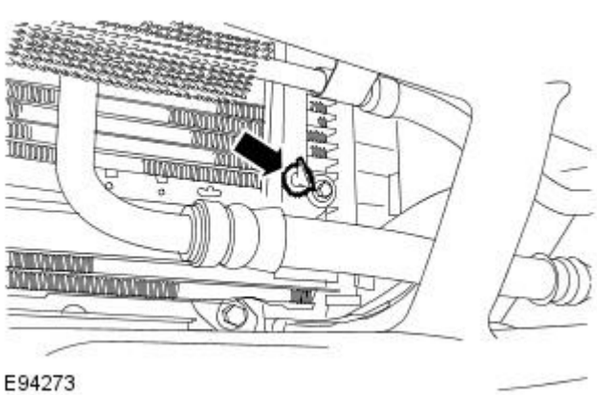

10. CAUTION: Do not over tighten the drain plug. Failure to follow this instruction may result in damage to the vehicle.

• NOTE: Install a new O-ring seal.

Install the supercharger radiator drain plug.

All vehicles

11. Lower the vehicle.

12. Install the cooling system vacuum refill adaptor to the expansion tank.

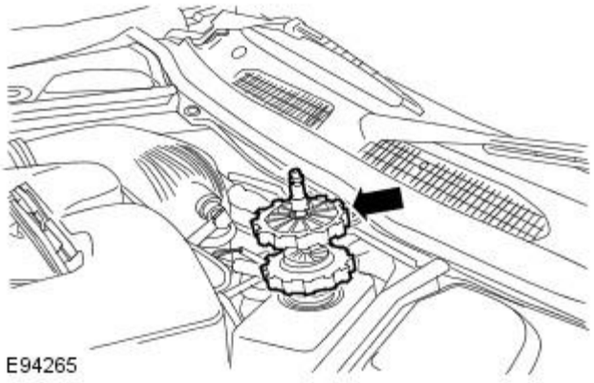

13. Install the vacuum filler gauge to the cooling system vacuum refill adaptor.

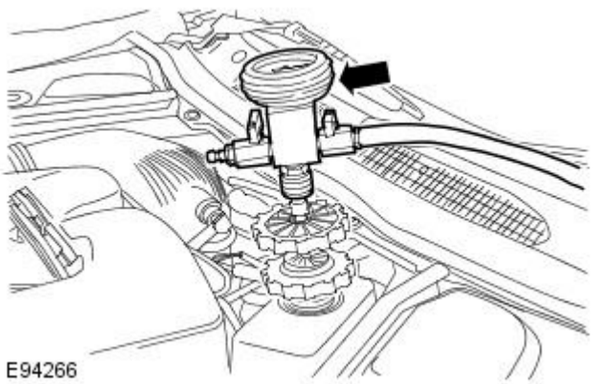

14. Install the venturi tube assembly to the vacuum filler gauge.

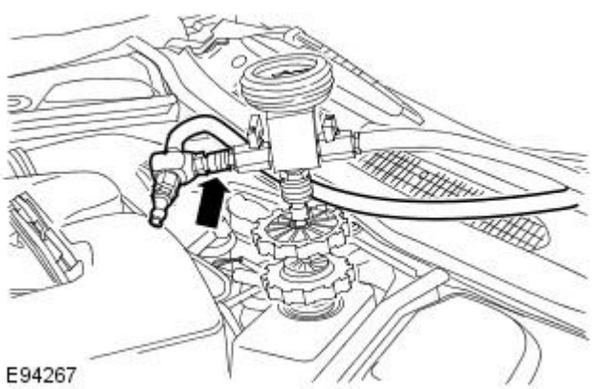

15. Connect a regulated compressed air supply to the venturi tube assembly.

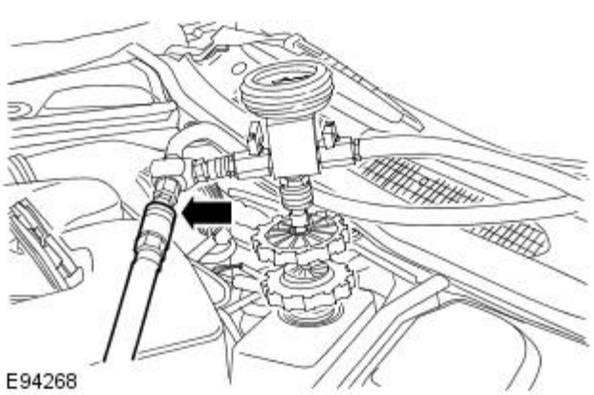

16. Position the evacuated air hose into a container.

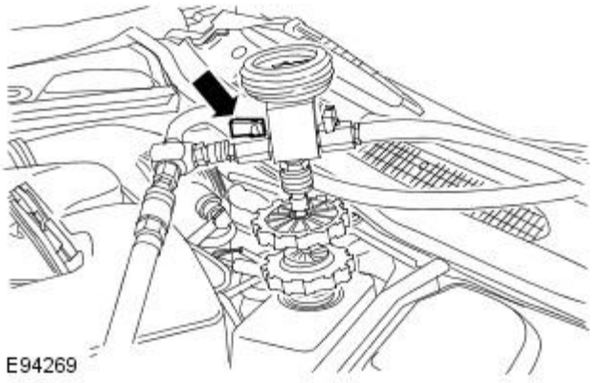

17. NOTE: Make sure the coolant supply valve is in the closed position on the vacuum filler gauge assembly.

• NOTE: The coolant vacuum fill tool needs an air pressure of 6 to 8 bar (87 to 116 psi) to operate correctly.

• NOTE: Small diameter or long airlines may restrict airflow to the coolant vacuum fill tool.

Open the air supply valve.

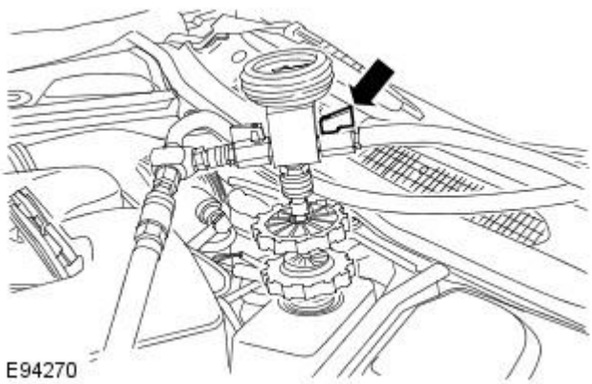

18. NOTE: Make sure the coolant supply hose is positioned into a container of fifty percent mixture of Jaguar Premium Cooling System Fluid or equivalent, meeting Jaguar specification WSS M97B44-D and fifty percent water. Make sure no air can enter the coolant supply hose.

Open the coolant supply valve for 2 seconds to prime the coolant supply hose.

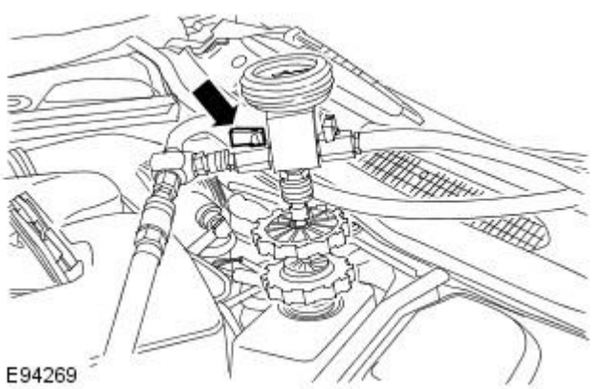

19. Apply air pressure progressively until the arrow on the vacuum filler gauge reaches the green segment.

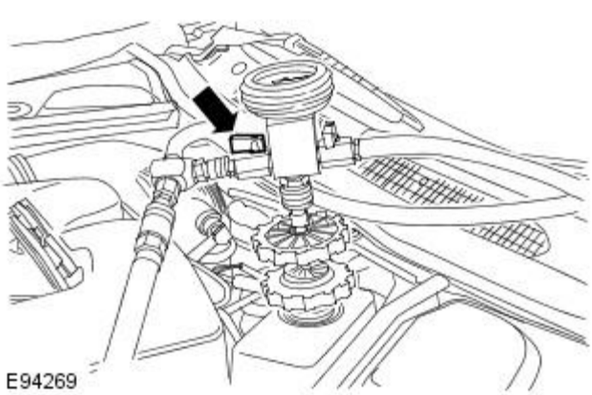

20. Close the air supply valve.

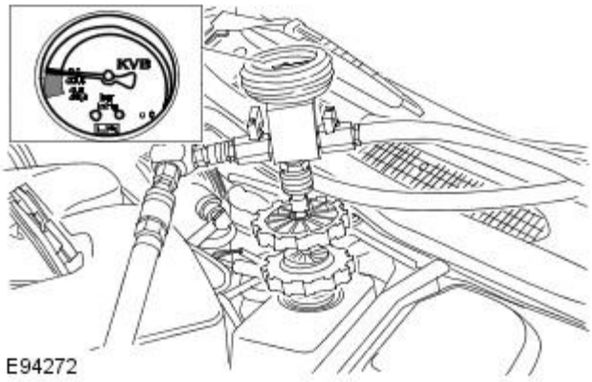

21. Allow one minute to check the vacuum is held.

- Disconnect the air supply.

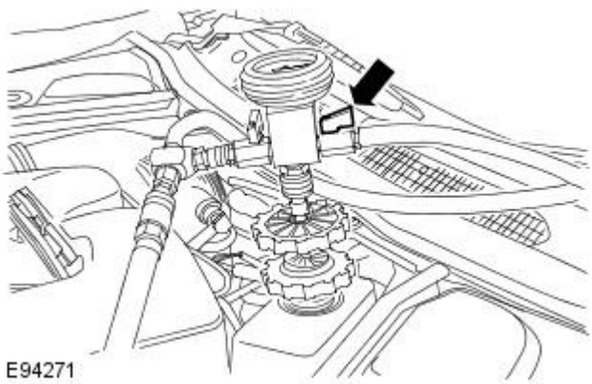

22. NOTE: Close the coolant supply valve when the coolant expansion tank MAX mark is reached or coolant movement has ceased.

Open the coolant supply valve and allow the coolant to be drawn into the system.

23. Remove the vacuum filler gauge and cooling system vacuum refill adaptor assembly.

24. Make sure that the coolant level in the expansion tank is at maximum.

25. Install the coolant expansion tank pressure cap.

Vehicles with supercharger

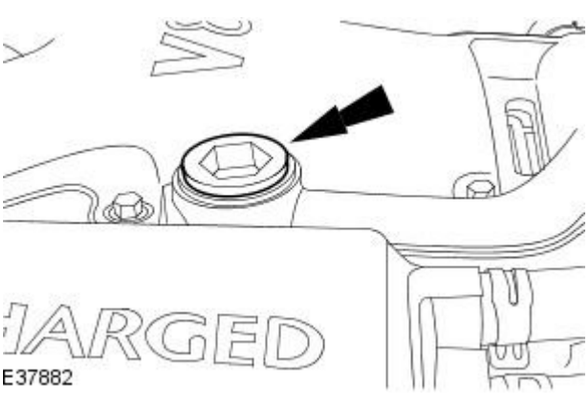

26. Remove the supercharger coolant filler plug.

- Remove and discard the sealing washer.

27. NOTE: Place a suitable cloth around the supercharger fill port.

Top up the coolant through the supercharger fill port.

28. CAUTION: Coolant may spill from the supercharger fill port when the ignition is switched on.

Switch on the ignition.

29. Allow the supercharger pump to run and top up the coolant through the supercharger fill port.

30. Switch the ignition off.

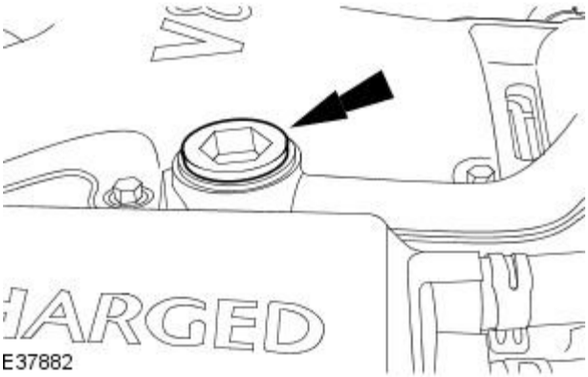

31. Install the supercharger coolant fill plug.

- Install a new sealing washer.
- Tighten to 45 Nm.
- Clean off any spillages.

All vehicles

32. CAUTION: Do not run the engine with the coolant expansion tank pressure cap removed. Failure to follow this instruction may cause damage to the vehicle.

START and RUN the engine.

33. Set the heating system to MAX heat, the blower motor to MAX speed and the air distribution to instrument panel registers.

34. CAUTION: Observe the engine temperature gauge. If the engine starts to over-heat switch off immediately and allow to cool. Failure to follow this instruction may cause damage to the vehicle.

Allow the engine to run until hot air is emitted from the instrument panel registers.

35. Switch off the engine.

36. Allow the engine to cool.

37. WARNING: To avoid having scalding hot coolant or steam blowing out of the cooling system, use extreme care when removing the coolant pressure cap from a hot cooling system. Wait until the engine has cooled, then wrap a thick cloth around the coolant pressure cap and turn it slowly until the pressure begins to release. Step back while the pressure is released from the system. When certain all the pressure has been released (still with a cloth) turn and remove the coolant pressure cap from the coolant expansion tank. Failure to follow these instructions may result in personal injury.

Remove the coolant expansion tank pressure cap.

38. NOTE: Make sure the coolant supply hose is positioned into a container of fifty percent mixture of Jaguar Premium Cooling System Fluid or equivalent, meeting Jaguar specification WSS M97B44-D and fifty percent water. Make sure no air can enter the coolant supply hose.

Check and top-up the coolant if required.

39. Install the coolant expansion tank pressure cap.

Engine Cooling - Cooling System Flushing

General Procedures

All vehicles

1. Remove the thermostat.
For additional information, refer to Thermostat in this section.

Vehicles without supercharger

2. Remove the radiator hose.

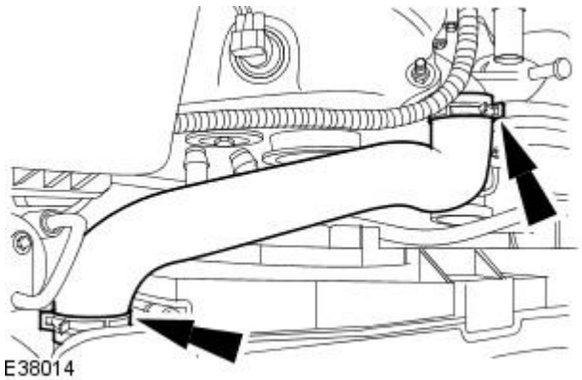

Vehicles with supercharger

3. Remove the radiator hose.

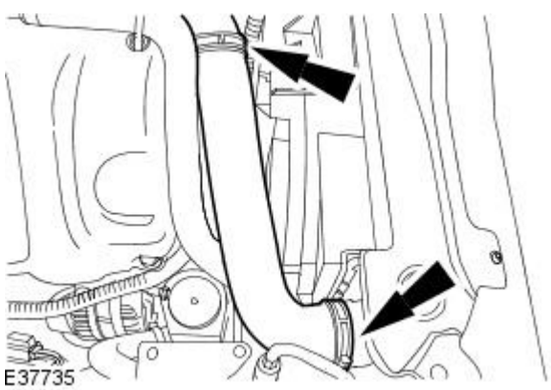

All vehicles

4. Detach the radiator hose.

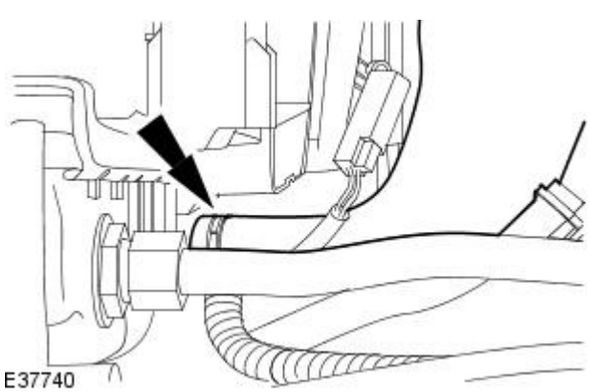

• NOTE: To remove rust, sludge and other foreign material from the cooling system, use Premium Cooling System flush, meeting Jaguar specification EGR-M14P7-A, which is safe for use with aluminium cooling systems. This cleaning restores cooling system efficiency and helps prevent overheating.

• NOTE: In severe cases where cleaning solvents will not properly clean the cooling system, it will be necessary to use the pressure flushing method using Cooling System Flusher, 164-R3670 to restore efficient operation.

• NOTE: A pulsating or reversed direction of flushing water will loosen sediment more quickly than a steady flow in the normal coolant flow direction.

• NOTE: Dispose of old coolant and flushing water contaminated with coolant and cleaning chemicals in accordance with local, state and federal laws.

5. Connect a hose pipe to the radiator upper coolant hose connection using a suitable connector.

6. CAUTION: Radiator internal pressure must not exceed 100 kPa (14.5 psi). Failure to follow this instruction may cause damage to the vehicle.

Flush the radiator using the hose pipe until the coolant flowing from the radiator lower coolant hose connection is clear.

7. Remove the hose pipe from the radiator upper coolant hose connection.

8. Connect a hose pipe to the upper coolant hose using a suitable connector.

9. Flush the engine using the hose pipe until the coolant flowing from the radiator lower coolant hose is clear.

10. Remove the hose pipe from the upper coolant hose connection.

Vehicles with supercharger

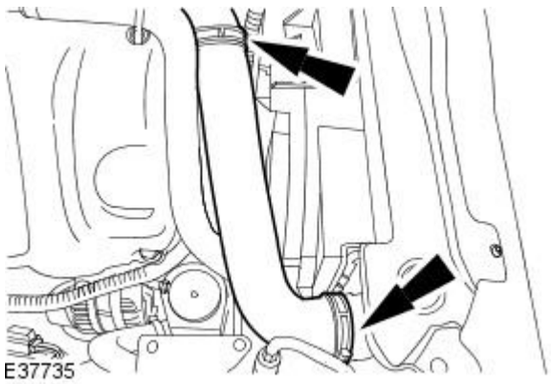

11. Install the radiator hose.

Vehicles without supercharger

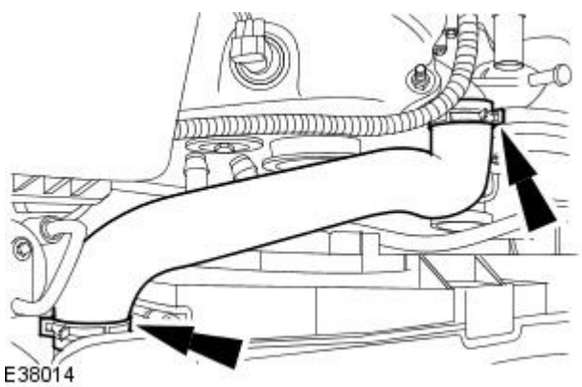

12. Install the radiator hose.

All vehicles

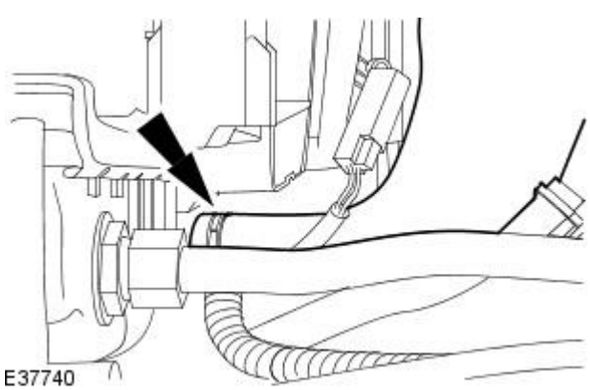

13. Attach the radiator hose.

14. Install the thermostat.
For additional information, refer to Thermostat in this section.

15. Fill the cooling system.
For additional information, refer to Cooling System Draining, Filling and Bleeding in this section.

Published: 11-May-2011

Engine Cooling - Cooling System Backflushing

General Procedures

• CAUTIONS:

The heater core must be backflushed separately from the engine cooling system to prevent the engine cooling system particles from clogging the heater core tubes and reducing (or eliminating) coolant flow through the heater core.

All engine cooling system flushing and backflushing procedures must include a separate backflushing of the heater core after the flushing or backflushing of the engine cooling system.

Heater core internal pressure must not exceed 100 kPa (14.5 psi). Failure to follow this instruction may cause damage to the heater core.

• NOTE: Cooling system backflushing should be carried out before the cooling system components are installed after the cooling system flushing procedure.

1. Disconnect the heater outlet coolant hose from the engine and connect the heater hose to a suitable hose pipe.
2. Disconnect the heater inlet coolant hose from the engine and allow the coolant to drain into a suitable container.
3. Turn the water supply valve to the hose ON and allow water pressure to flow through the heater core.
4. Allow water pressure to flow through the heater core for approximately five minutes.
5. Turn the water supply valve to the hose OFF and disconnect the hose pipe from the heater hose.
6. Connect the heater inlet coolant hose to the engine.
7. Connect the heater outlet coolant hose to the engine.
8. Fill the cooling system as described using a 50% mixture of Jaguar Premium Cooling System Fluid, or equivalent meeting Jaguar specification WSS M97B44-D and 50% distilled water.
9. Test the system for correct heater performance with the specified engine cooling system conditions.

Radiator Backflushing

1. Remove the radiator.
   For additional information, refer to Radiator in this section.
2. Invert the radiator.
3. Connect a suitable hose pipe to the lower coolant hose connection of the radiator.
4. Turn the water supply valve to the hose ON and allow water pressure to flow through the radiator.
5. Allow water pressure to flow through the radiator for approximately five minutes.
6. Turn the water supply valve to the hose OFF and disconnect the hose pipe from the radiator.
7. Allow the coolant to drain from the radiator.
8. Install the radiator.
   For additional information, refer to Radiator in this section.

Engine Backflushing

1. Remove the thermostat before backflushing the engine.
   For additional information, refer to Thermostat in this section.
2. Position the high-pressure water hose into the engine through the engine return and backflush the engine.
3. Connect a suitable hose pipe to the upper coolant hose connection of the engine.
4. Turn the water supply valve to the hose ON and allow water pressure to flow through the engine.
5. Allow water pressure to flow through the engine for approximately five minutes.
6. Turn the water supply valve to the hose OFF and disconnect the hose pipe from the upper coolant hose connection of the engine.
7. Connect the upper coolant hose to the engine.
8. Fill the cooling system as described using a 50% mixture of Jaguar Premium Cooling System Fluid or equivalent, meeting Jaguar specification WSS M97B44-D and 50% distilled water.

Engine Cooling - Coolant Expansion TankV8 4.2L Petrol

Removal and Installation

Removal

• WARNINGS:

NEVER REMOVE THE COOLANT EXPANSION TANK PRESSURE CAP UNDER ANY CIRCUMSTANCES WHILE THE ENGINE IS OPERATING. FAILURE TO FOLLOW THIS INSTRUCTION MAY RESULT IN PERSONAL INJURY.

TO AVOID HOT COOLANT OR STEAM BLOWING OUT OF THE COOLING SYSTEM, USE EXTREME CARE WHEN REMOVING THE COOLANT EXPANSION TANK PRESSURE CAP. WAIT UNTIL THE ENGINE HAS COOLED DOWN, THEN INSULATE THE COOLANT PRESSURE CAP WITH A SUITABLE CLOTH AND SLOWLY LOOSEN THE COOLANT EXPANSION TANK PRESSURE CAP UNTIL THE COOLING SYSTEM PRESSURE IS RELEASED. DO NOT REMOVE THE COOLANT EXPANSION TANK PRESSURE CAP. STEP BACK WHILE THE PRESSURE IS RELEASED FROM THE SYSTEM. WHEN ALL OF THE PRESSURE HAS BEEN RELEASED SLOWLY REMOVE THE COOLANT EXPANSION TANK PRESSURE CAP (STILL WITH THE SUITABLE CLOTH IN POSITION) FROM THE COOLANT EXPANSION TANK. FAILURE TO FOLLOW THIS INSTRUCTION MAY RESULT IN PERSONAL INJURY

1. Open the engine compartment and fit paintwork protection sheets.
2. Release the cooling system pressure.
   - Remove the coolant expansion tank pressure cap.
3. Place a cloth under the expansion tank to absorb any spillage caused by disconnecting the hoses.
4. Disconnect the hose from the expansion tank.

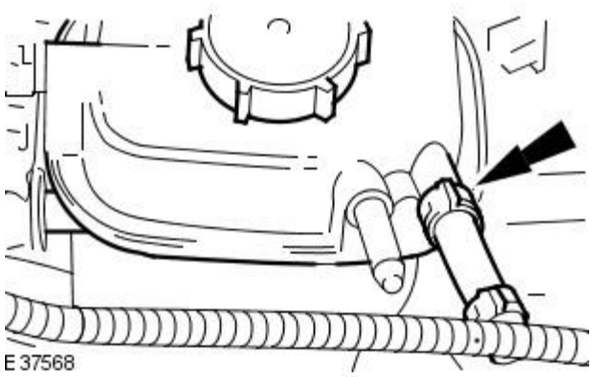
E 37568

5. Disconnect the hose from the expansion tank.

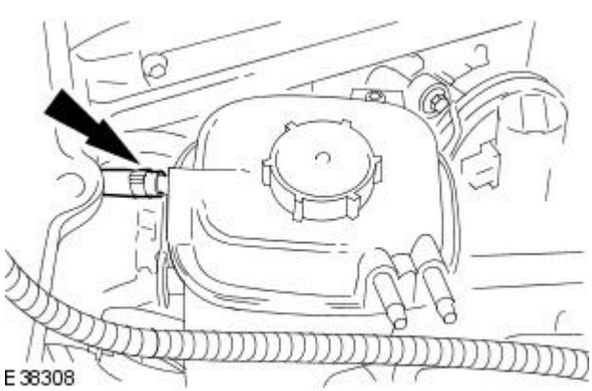
E 38308

6. Fit blanking plugs to the pipe and the tank.
7. Remove the expansion tank from the mounting.
   - Remove the bolt which secures the tank.
   - Remove the tank from the rear mounting grommets.
   - Disconnect the coolant level sensor connector.

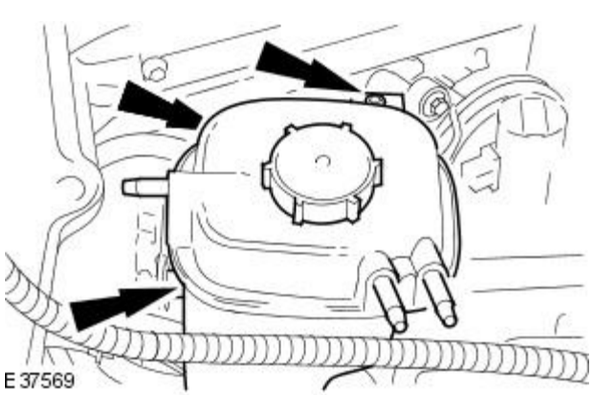
E 37569

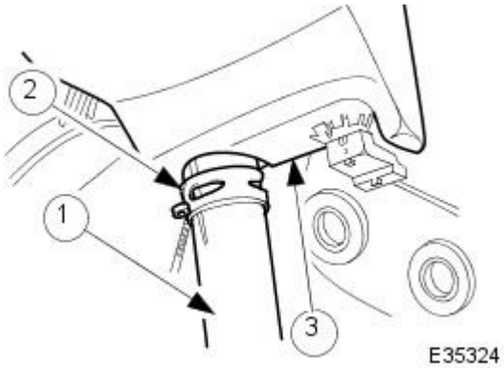

8. Remove the expansion tank from the vehicle.

1. Use a pipe clamp to clamp the bottom hose branch.
2. Release the pipe clip and move it along the pipe.
3. Disconnect the tank from the bottom hose and remove it from the vehicle.

Installation

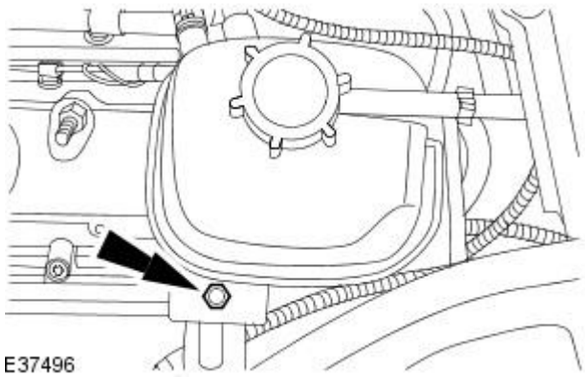

1. Installation is the reverse of the removal procedure.

- Tighten to 10 Nm.
- Fill the cooling system to the correct level.

Engine Cooling - Coolant Expansion TankV8 S/C 4.2L Petrol

Removal and Installation

Removal

1. Open the engine compartment and fit paintwork protection sheets.

2. Ensure that the cooling system is cool and very carefully, remove the pressure cap.

3. Place a cloth under the expansion tank to absorb any spillage caused by disconnecting the hoses.

4. Release the hoses from the expansion tank.

1. Release the hose clip (expansion tank to radiators). Disconnect the hose.
2. Release the hose clip (expansion tank to coolant output pipe). Disconnect the hose.
3. Release the hose clip (expansion tank to coolant recovery bottle). Disconnect the hose.

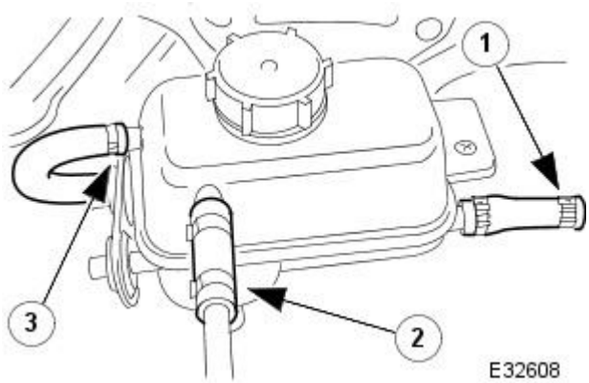

5. Fit blanking plugs to the hoses and the tank.

6. Remove the expansion tank from the mounting.

1. Remove the bolt which secures the tank.
2. Remove the tank from the rear mounting grommets.
3. Disconnect the coolant level sensor connector.

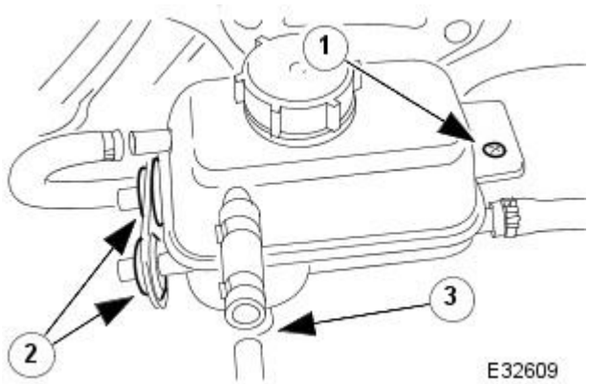

7. Remove the expansion tank from the vehicle.

1. Use a pipe clamp to clamp the lower hose branch.
2. Release the hose clip and move it along the hose.
3. Disconnect the tank from the lower hose and remove it from the vehicle.

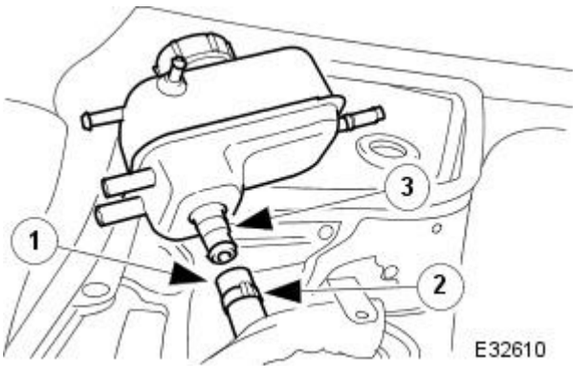

8. Empty any surplus coolant from the expansion tank into a drain tray.

9. Remove the cloth from the engine and clean any spillage from the engine bay.

10. Remove the coolant level probe.

1. Use a lever to release the probe from the expansion tank and remove it.

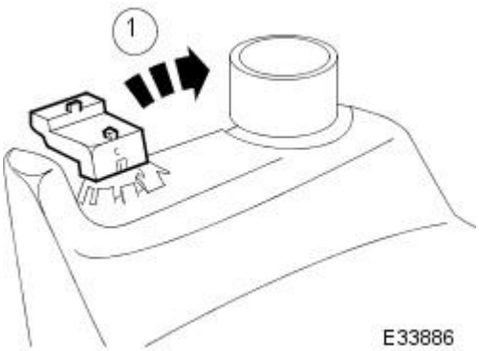

Installation

1. Installation is the reverse of the removal procedure.

Engine Cooling - Cooling Fan Module

Removal and Installation

Removal

• WARNINGS:

Never remove the coolant pressure cap under any circumstances while the engine is operating. Failure to follow this instruction may result in personal injury.

To avoid having scalding hot coolant or steam blow out of the cooling system, use extreme care when removing the coolant pressure cap from a hot cooling system. Wait until the engine has cooled, then wrap a thick cloth around the coolant pressure cap and turn it slowly until the pressure begins to release. Step back while the pressure is released from the system. When certain all the pressure has been released (still with a cloth) turn and remove the coolant pressure cap from the coolant expansion tank. Failure to follow these instructions may result in personal injury.

To avoid the possibility of personal injury, do not operate the engine with the hood open until the fan blades have been examined for cracks and separation. Failure to follow this instruction may result in personal injury.

Remove fuse 14 from the engine management fuse box prior to performing any under hood service in the area of the cooling fan when the engine is hot, since the cooling fan motor could operate if the engine has been switched OFF. Failure to follow this instruction may result in personal injury.

CAUTION: The engine cooling system must be maintained with the correct concentration and type of anti-freeze solution to prevent corrosion and frost damage. Failure to follow this instruction may cause damage to the vehicle.

1. Remove the cooling fan motor and shroud.
For additional information, refer to Cooling Fan Motor and Shroud in this section.

2. Detach the cooling fan module wiring harness.

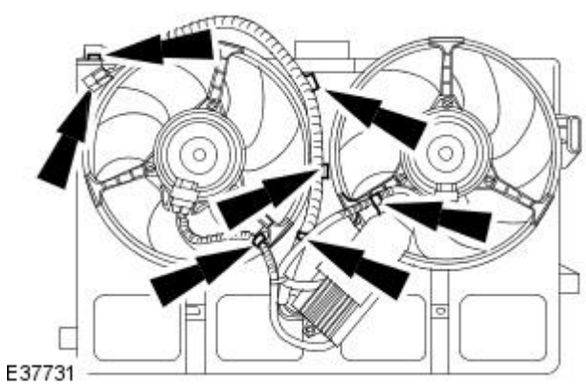

3. Disconnect the cooling fan module electrical connectors.

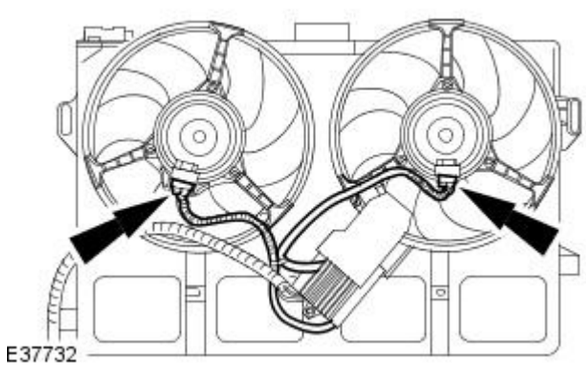

4. Remove the cooling fan module.

- Remove the retaining bolt.

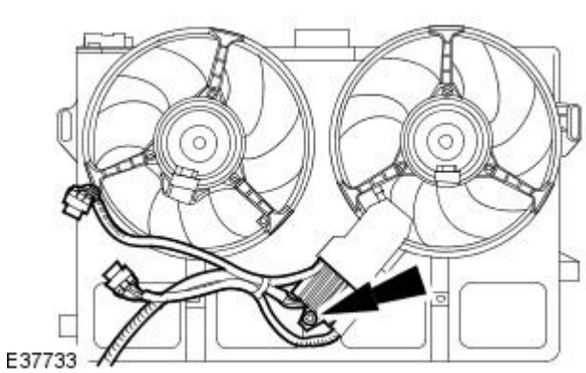

Installation

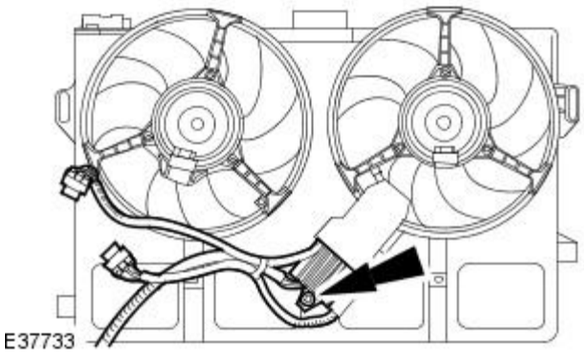

1. Install the cooling fan module.

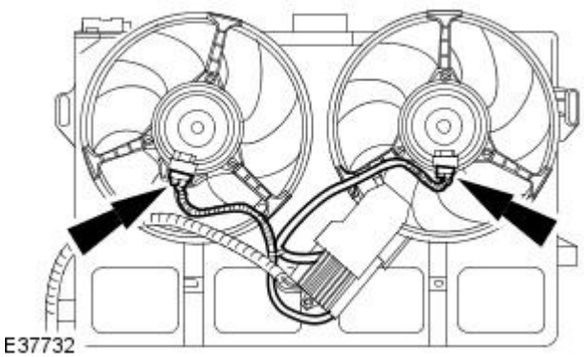

2. Connect the cooling fan module electrical connectors.

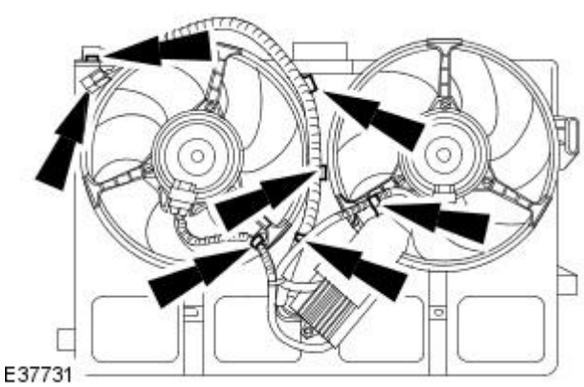

3. Attach the cooling fan module wiring harness.

4. Install the cooling fan motor and shroud.
For additional information, refer to Cooling Fan Motor and Shroud in this section.

Engine Cooling - Cooling Fan Motor and Shroud

Removal and Installation

Removal

All vehicles

• WARNINGS:

Never remove the coolant pressure cap under any circumstances while the engine is operating. Failure to follow this instruction may result in personal injury.

To avoid having scalding hot coolant or steam blow out of the cooling system, use extreme care when removing the coolant pressure cap from a hot cooling system. Wait until the engine has cooled, then wrap a thick cloth around the coolant pressure cap and turn it slowly until the pressure begins to release. Step back while the pressure is released from the system. When certain all the pressure has been released (still with a cloth) turn and remove the coolant pressure cap from the coolant expansion tank. Failure to follow these instructions may result in personal injury.

To avoid the possibility of personal injury, do not operate the engine with the hood open until the fan blades have been examined for cracks and separation. Failure to follow this instruction may result in personal injury.

Remove fuse 14 from the engine management fuse box prior to performing any under hood service in the area of the cooling fan when the engine is hot, since the cooling fan motor could operate if the engine has been switched OFF. Failure to follow this instruction may result in personal injury.

CAUTION: The engine cooling system must be maintained with the correct concentration and type of anti-freeze solution to prevent corrosion and frost damage. Failure to follow this instruction may cause damage to the vehicle.

1. Remove the air cleaner.
   For additional information, refer to: Air Cleaner (303-12 Intake Air Distribution and Filtering, Removal and Installation).
2. Drain the coolant.
   For additional information, refer to: Cooling System Draining, Filling and Bleeding (303-03A Engine Cooling, General Procedures).
3. Detach the air conditioning tube.

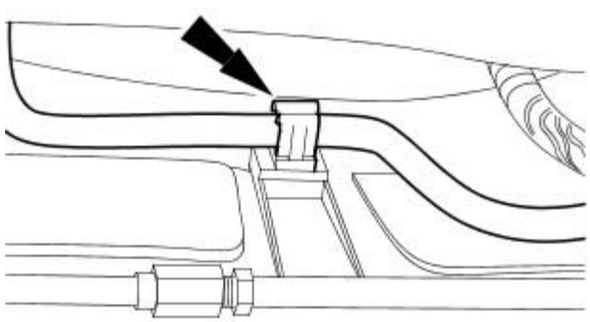

E37734

4. Lower the vehicle.

Vehicles with supercharger

5. Remove the radiator hose.

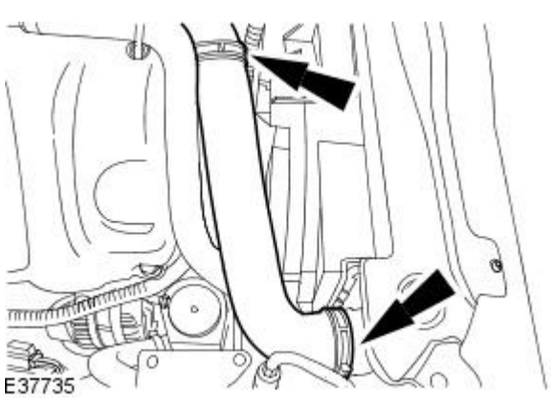

E37735

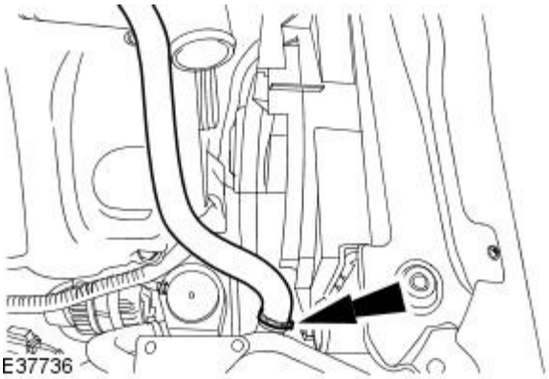

6. Detach the intercooler hose.

Vehicles without supercharger

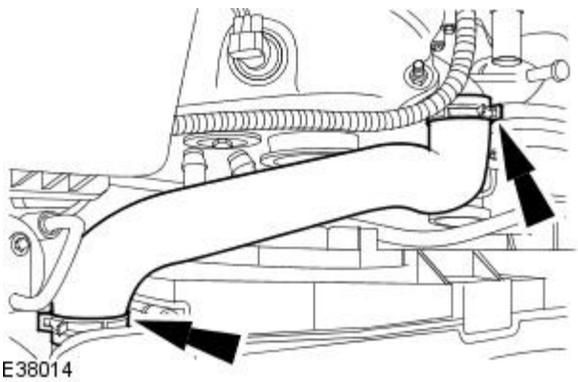

7. Remove the radiator hose.

All vehicles

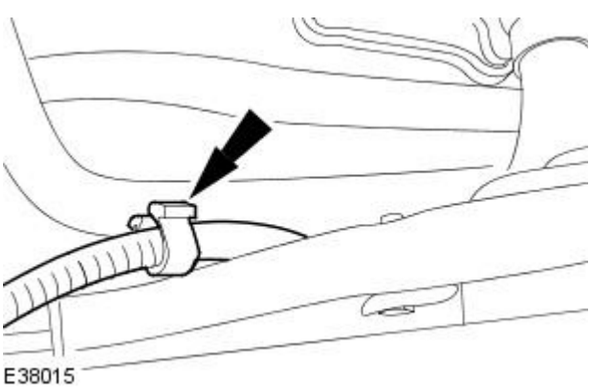

8. Detach the wiring harness.

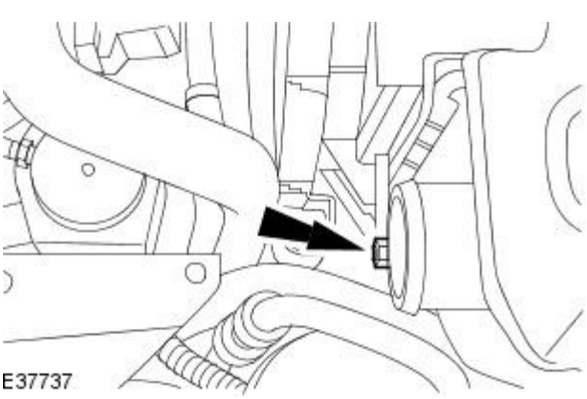

9. Remove the cooling fan motor shroud retaining bolt.

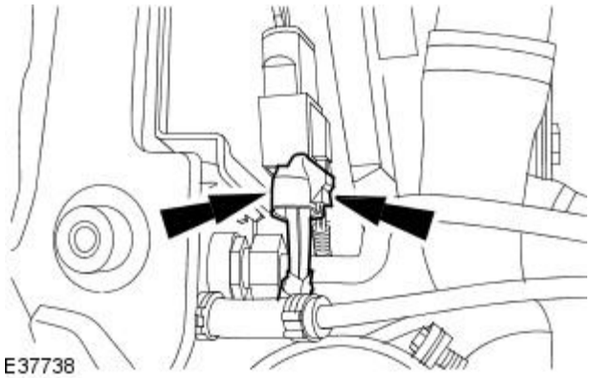

10. Disconnect the cooling fan module electrical connectors

Vehicles with supercharger

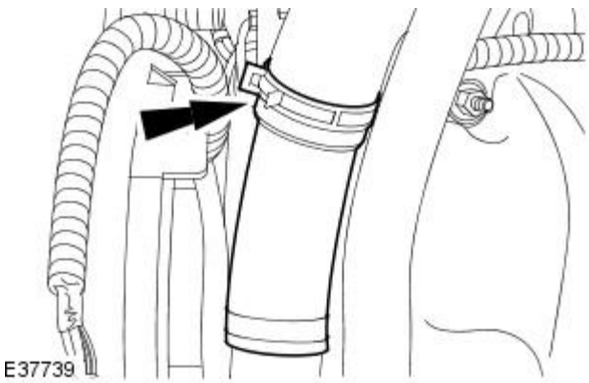

11. Detach the radiator hose.

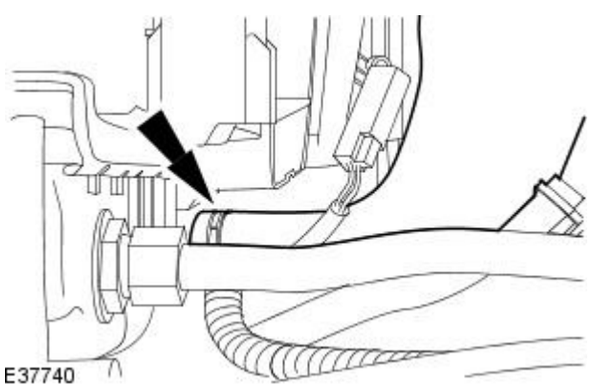

12. Detach the radiator hose.

All vehicles

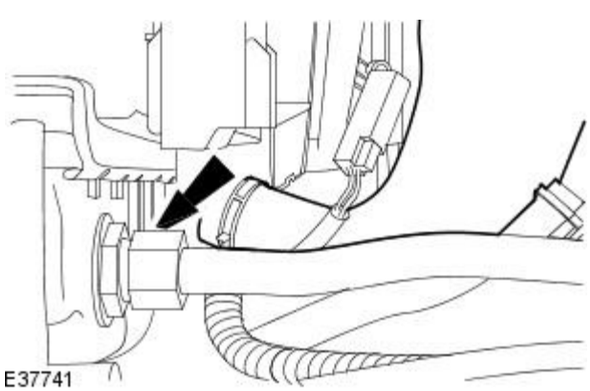

13. CAUTION: Carefully remove the cooling fan motor and shroud from the vehicle. Failure to follow this instruction may cause damage to the vehicle.

Remove the cooling fan motor and shroud.

- Remove the retaining nut.

Installation

All vehicles

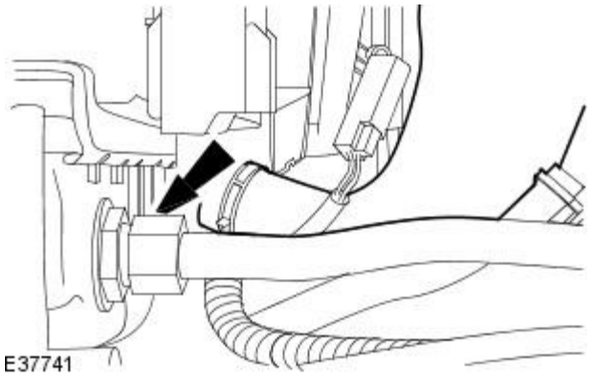

1. CAUTION: Carefully install the cooling fan motor and shroud to the vehicle. Failure to follow this instruction may cause damage to the vehicle.

• NOTE: Make sure that the cooling fan motor and shroud is correctly located in the lower mounts

Install the cooling fan motor and shroud.

- Tighten to 4 Nm.

Vehicles with supercharger

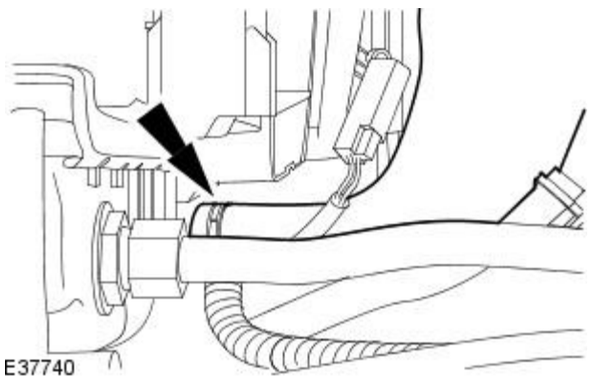

2. Attach the radiator hose.

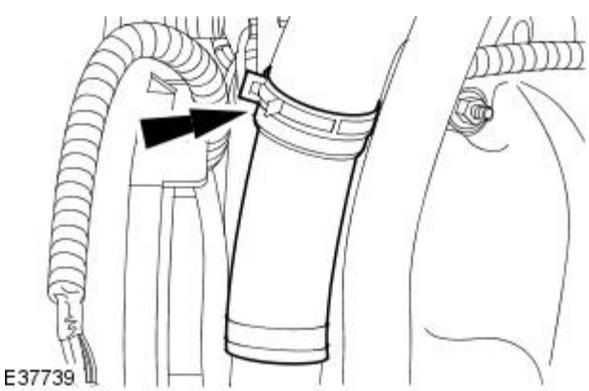

3. Attach the radiator hose.

All vehicles

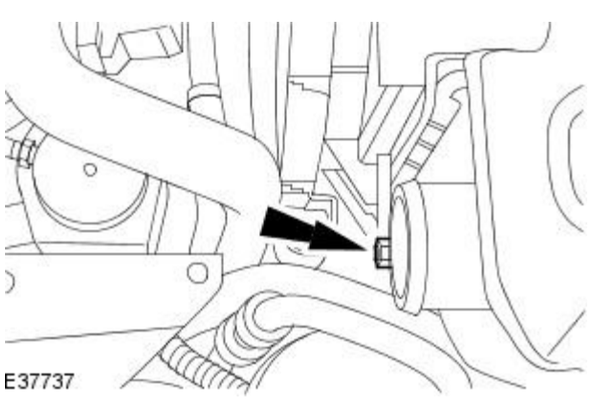

4. Install the cooling fan motor shroud retaining bolt.

- Tighten to 4 Nm.

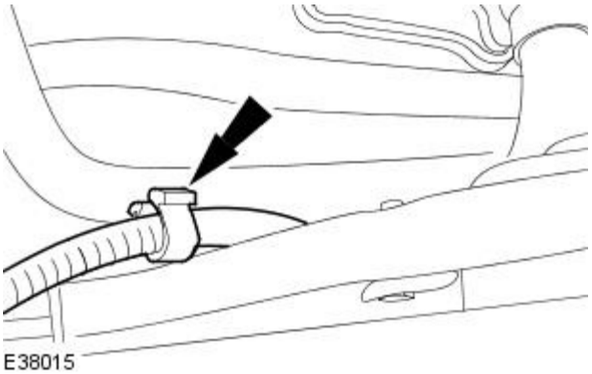

5. Attach the wiring harness.

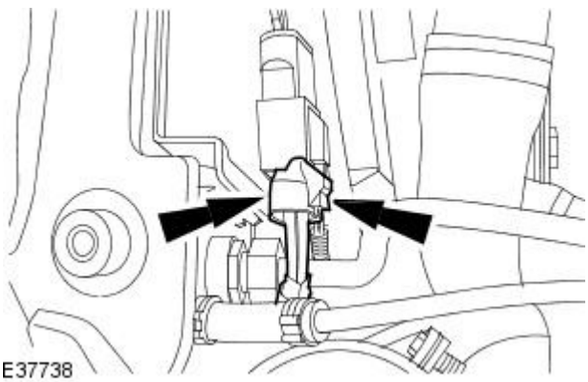

6. Connect the cooling fan module electrical connectors.

Vehicles without supercharger

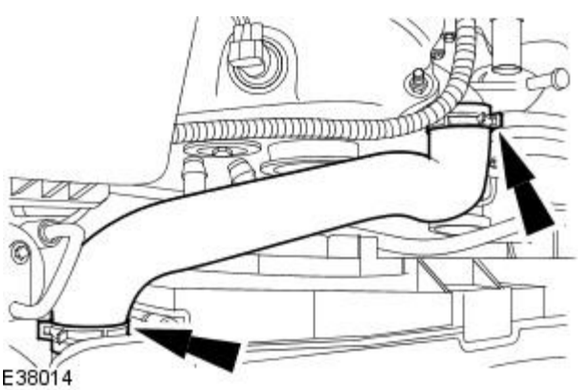

7. Install the radiator hose.

Vehicles with supercharger

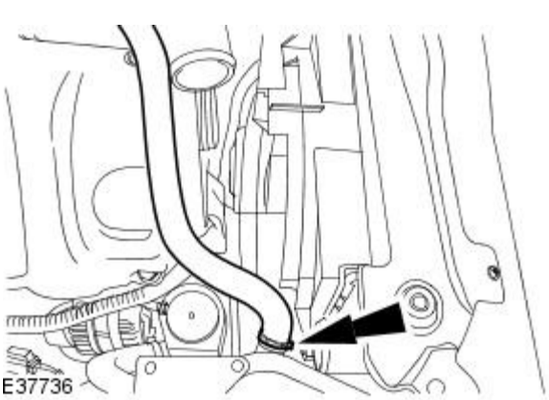

8. Attach the intercooler hose.

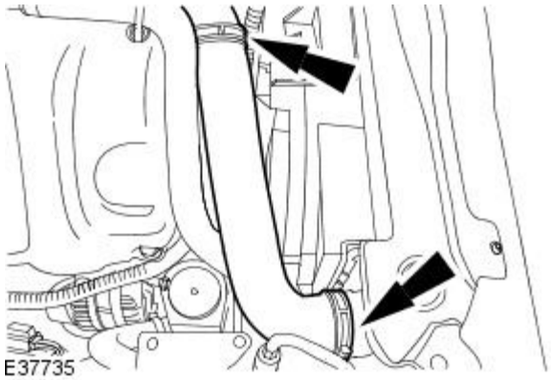

9. Install the radiator hose.

All vehicles

10. Raise the vehicle.

11. Attach the air conditioning tube.

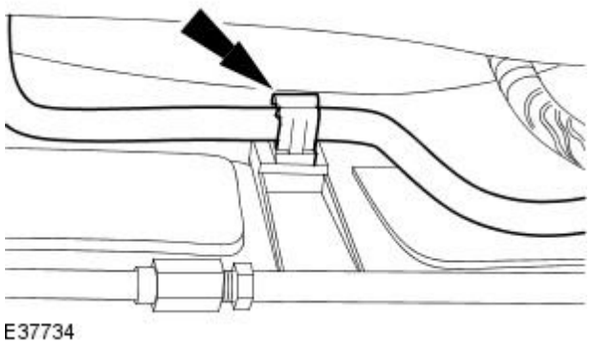

12. Lower the vehicle.

13. Fill the coolant.
For additional information, refer to: Cooling System Draining, Filling and Bleeding (303-03A Engine Cooling, General Procedures).

Engine Cooling - Degas Bottle

Removal and Installation

Removal

1. WARNINGS:

NEVER REMOVE THE COOLANT EXPANSION TANK PRESSURE CAP UNDER ANY CIRCUMSTANCES WHILE THE ENGINE IS OPERATING. FAILURE TO FOLLOW THIS INSTRUCTION MAY RESULT IN PERSONAL INJURY.

TO AVOID HOT COOLANT OR STEAM BLOWING OUT OF THE COOLING SYSTEM, USE EXTREME CARE WHEN REMOVING THE COOLANT EXPANSION TANK PRESSURE CAP. WAIT UNTIL THE ENGINE HAS COOLED DOWN, THEN INSULATE THE COOLANT PRESSURE CAP WITH A SUITABLE CLOTH AND SLOWLY LOOSEN THE COOLANT EXPANSION TANK PRESSURE CAP UNTIL THE COOLING SYSTEM PRESSURE IS RELEASED. DO NOT REMOVE THE COOLANT EXPANSION TANK PRESSURE CAP. STEP BACK WHILE THE PRESSURE IS RELEASED FROM THE SYSTEM. WHEN ALL OF THE PRESSURE HAS BEEN RELEASED SLOWLY REMOVE THE COOLANT EXPANSION TANK PRESSURE CAP (STILL WITH THE SUITABLE CLOTH IN POSITION) FROM THE COOLANT EXPANSION TANK. FAILURE TO FOLLOW THIS INSTRUCTION MAY RESULT IN PERSONAL INJURY

Release the cooling system pressure.

- Remove the coolant expansion tank pressure cap.

2. Remove the right-hand front fender splash shield.
For additional information, refer to Section 501-02 Front End Body Panels.

3. Detach the degas bottle breather pipe.

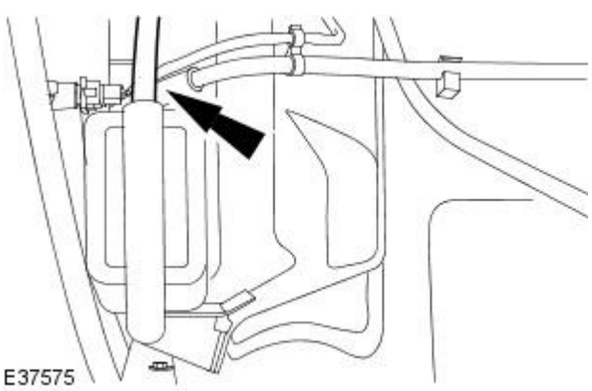

4. Detach the coolant hose from the degas bottle.

- Detach the coolant hose from the retaining clip.

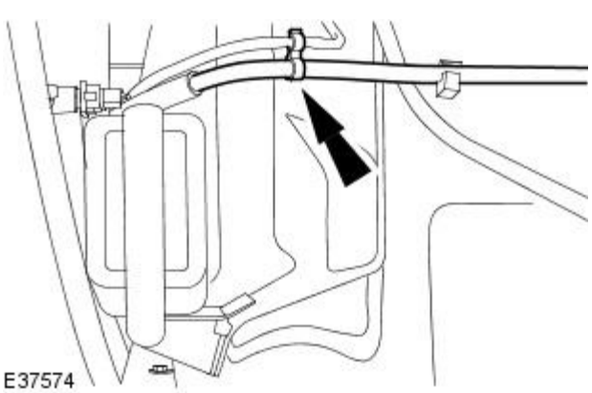

5. Remove the degas bottle retaining nut.

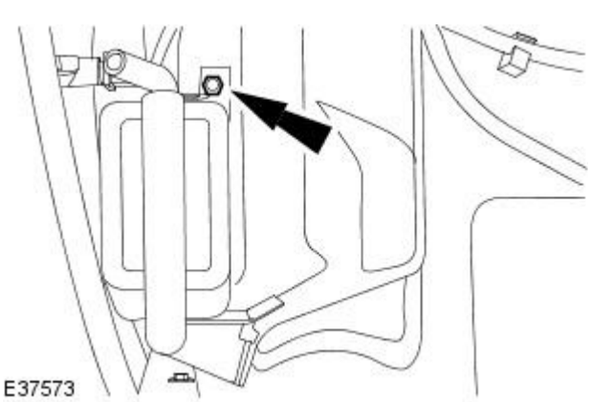

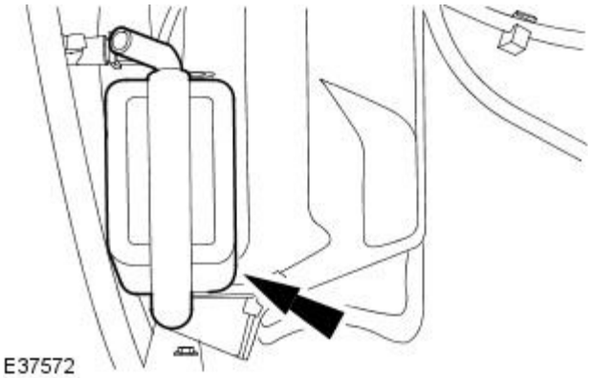

6. Remove the degas bottle.

Installation

1. To install, reverse the removal procedure.

Published: 11-May-2011

Engine Cooling - Engine Coolant Level Switch

Removal and Installation

Removal

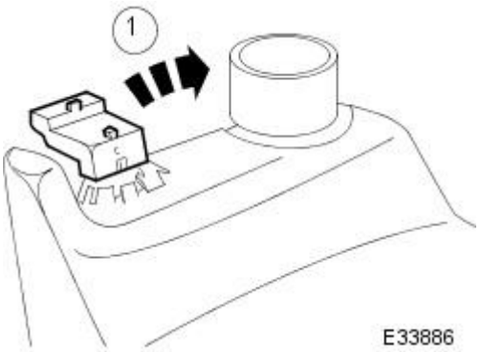

1. Open the engine compartment and fit paintwork protection sheets.

2. Remove the expansion tank; refer to Operation (26.15.01.).

3. Remove the coolant level probe.

1. Use a lever to release the probe from the expansion tank and remove it.

4. Clean the expansion tank probe aperture.

Installation

1. Installation is the reverse of the removal procedure.

Engine Cooling - RadiatorV8 4.2L Petrol

Removal and Installation

Removal

All vehicles

• WARNINGS:

Never remove the coolant pressure cap under any circumstances while the engine is operating. Failure to follow this instruction may result in personal injury.

To avoid having scalding hot coolant or steam blow out of the cooling system, use extreme care when removing the coolant pressure cap from a hot cooling system. Wait until the engine has cooled, then wrap a thick cloth around the coolant pressure cap and turn it slowly until the pressure begins to release. Step back while the pressure is released from the system. When certain all the pressure has been released (still with a cloth) turn and remove the coolant pressure cap from the coolant expansion tank. Failure to follow these instructions may result in personal injury.

To avoid the possibility of personal injury, do not operate the engine with the hood open until the fan blades have been examined for cracks and separation. Failure to follow this instruction may result in personal injury.

Remove fuse 14 from the engine management fuse box prior to performing any under hood service in the area of the cooling fan when the engine is hot, since the cooling fan motor could operate if the engine has been switched OFF. Failure to follow this instruction may result in personal injury.

CAUTION: The engine cooling system must be maintained with the correct concentration and type of anti-freeze solution to prevent corrosion and frost damage. Failure to follow this instruction may cause damage to the vehicle.

1. Carry out the air conditioning (A/C) system recovery procedure.
   For additional information, refer to Section 412-00 Climate Control System - General Information.
2. Remove the cooling fan motor and shroud.
   For additional information, refer to Cooling Fan Motor and Shroud in this section.
3. NOTE: Cap the exposed ports.

   Disconnect the air conditioning pipes.

   - Remove the retaining nuts.
   - Remove and discard the O-ring seals.

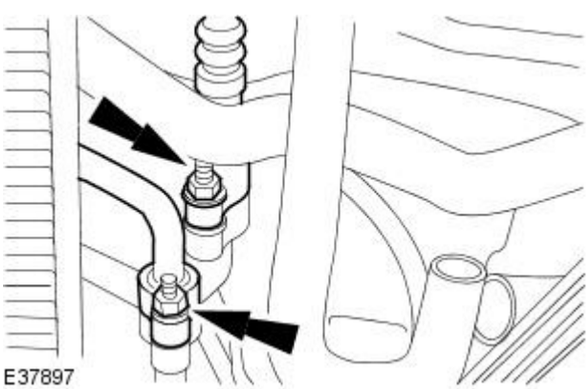
E37897

4. NOTE: Cap the exposed ports.

   Remove the receiver drier to condenser pipe.

   - Remove the retaining bolt.
   - Remove and discard the O-ring seal.

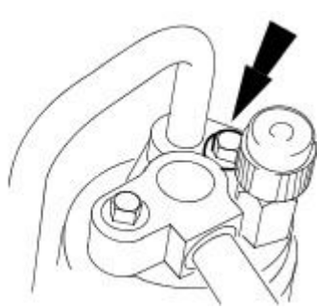
E38366

5. NOTE: Cap the exposed ports.

   Disconnect the transmission oil cooler lower pipe.

   - Remove and discard the O-ring seal.

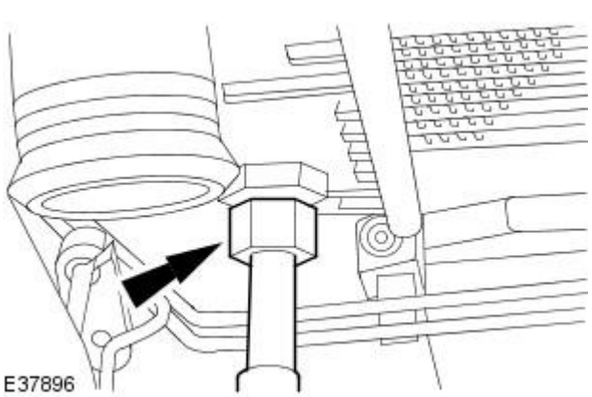
E37896

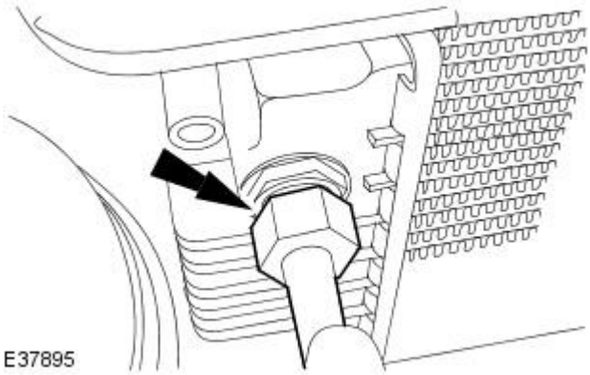

6. NOTE: Cap the exposed ports.

Disconnect the transmission oil cooler upper pipe.

- Remove and discard the O-ring seal.

Vehicles with convertible top

7. Remove the radiator grille opening cross brace.
For additional information, refer to Section 501-02 Front End Body Panels.

All vehicles

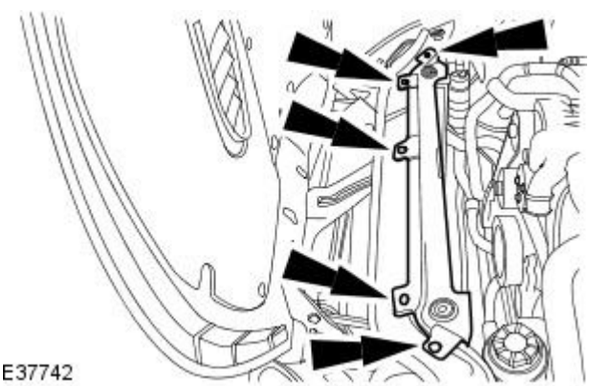

8. Remove the radiator.

- Remove the radiator support bracket.

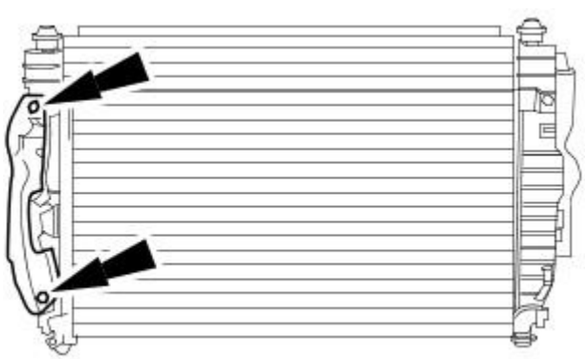

9. Remove the condenser pipe protection bracket.

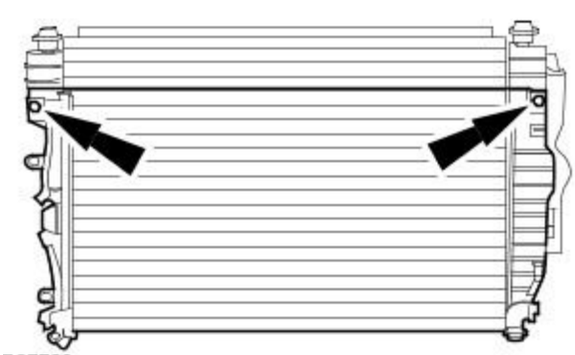

10. Remove the radiator.

- Remove the retaining bolts.

Installation

All vehicles

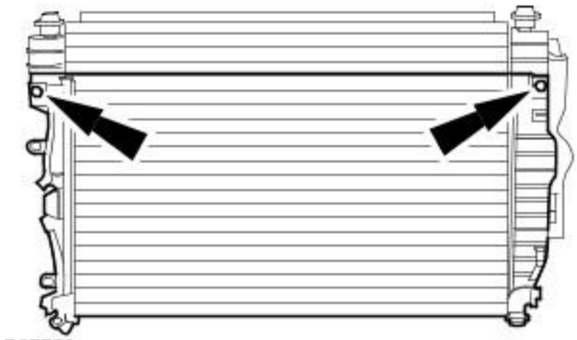
E37729

1. Install the radiator.

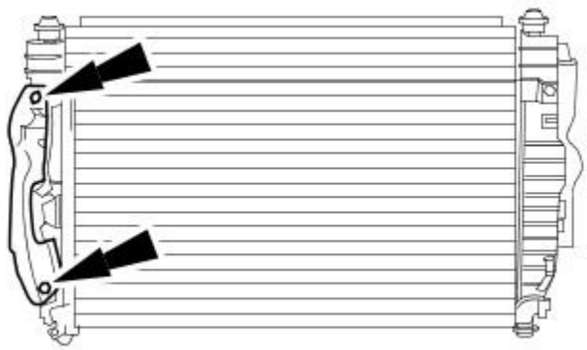
E37728

2. Install the condenser pipe protection bracket.

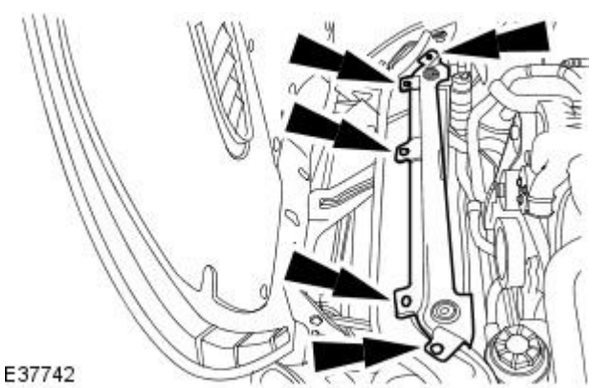
E37742

3. Install the radiator.

- Tighten to 10 Nm.

Vehicles with convertible top

4. Install the radiator grille opening cross brace.
For additional information, refer to Section 501-02 Front End Body Panels.

All vehicles

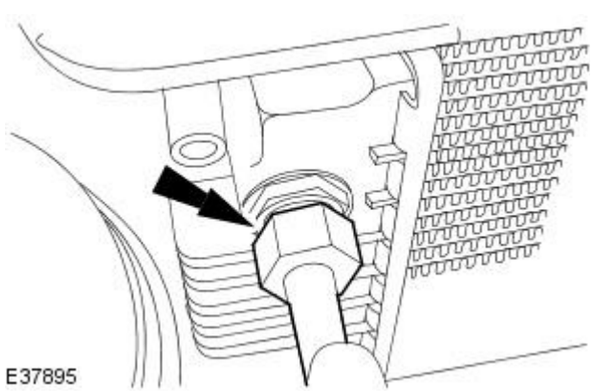
E37895

5. NOTE: Uncap the ports.

Connect the transmission oil cooler upper pipe.

- Install a new O-ring seal.
- Tighten to 20 Nm.

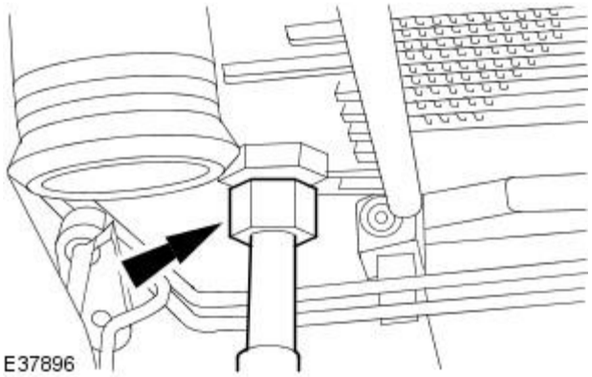

6. NOTE: Uncap the ports.

Connect the transmission oil cooler lower pipe.

- Install a new O-ring seal.
- Tighten to 20 Nm.

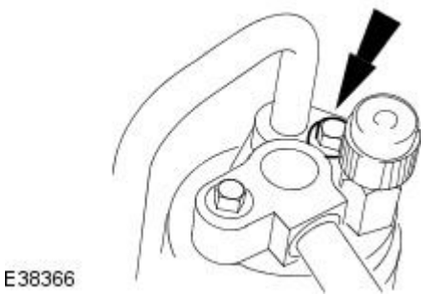

7. NOTE: Uncap the ports.

Install the receiver drier to condenser pipe.

- Install a new O-ring seal.
- Tighten to 10 Nm.

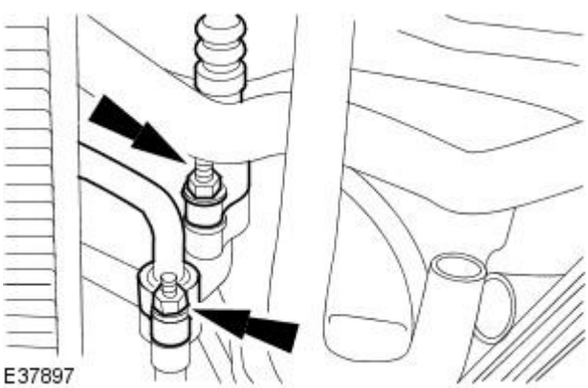

8. NOTE: Uncap the ports.

Connect the air conditioning pipes.

- Install new O-ring seals.
- Tighten to 10 Nm.

9. Clean off any oil residue that may contain A/C system fluorescent dye.

10. Install the cooling fan motor and shroud.
For additional information, refer to Cooling Fan Motor and Shroud in this section.

11. Carry out the air conditioning (A/C) evacuation and charging procedure.
For additional information, refer to Section 412-00 Climate Control System - General Information.

Engine Cooling - RadiatorV8 S/C 4.2L Petrol

Removal and Installation

Removal

All vehicles

• WARNINGS:

Never remove the coolant pressure cap under any circumstances while the engine is operating. Failure to follow this instruction may result in personal injury.

To avoid having scalding hot coolant or steam blow out of the cooling system, use extreme care when removing the coolant pressure cap from a hot cooling system. Wait until the engine has cooled, then wrap a thick cloth around the coolant pressure cap and turn it slowly until the pressure begins to release. Step back while the pressure is released from the system. When certain all the pressure has been released (still with a cloth) turn and remove the coolant pressure cap from the coolant expansion tank. Failure to follow these instructions may result in personal injury.

To avoid the possibility of personal injury, do not operate the engine with the hood open until the fan blades have been examined for cracks and separation. Failure to follow this instruction may result in personal injury.

Remove fuse 14 from the engine management fuse box prior to performing any under hood service in the area of the cooling fan when the engine is hot, since the cooling fan motor could operate if the engine has been switched OFF. Failure to follow this instruction may result in personal injury.

CAUTION: The engine cooling system must be maintained with the correct concentration and type of anti-freeze solution to prevent corrosion and frost damage. Failure to follow this instruction may cause damage to the vehicle.

1. Carry out the air conditioning (A/C) system recovery procedure. For additional information, refer to Section 412-00 Climate Control System - General Information.
2. Remove the supercharger coolant pump. For additional information, refer to Section 303-03A Engine Cooling / 303-03B Supercharger Cooling.
3. Remove the cooling fan motor and shroud. For additional information, refer to Cooling Fan Motor and Shroud in this section.
4. NOTE: Cap the exposed ports.

   Disconnect the air conditioning pipes.

   - Remove the retaining nuts.
   - Remove and discard the O-ring seals.

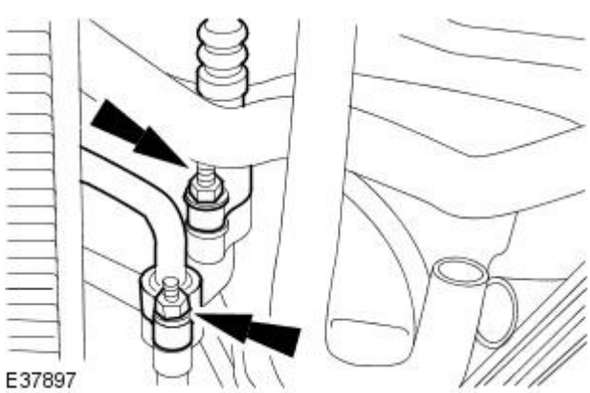

5. NOTE: Cap the exposed ports.

   Remove the receiver drier to condenser pipe.

   - Remove the retaining bolt.
   - Remove and discard the O-ring seal.

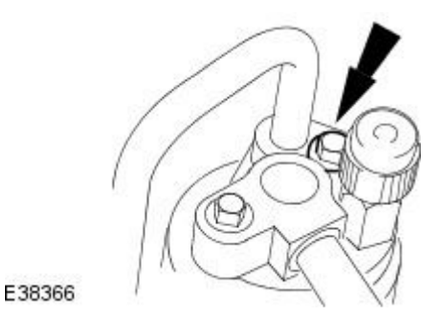

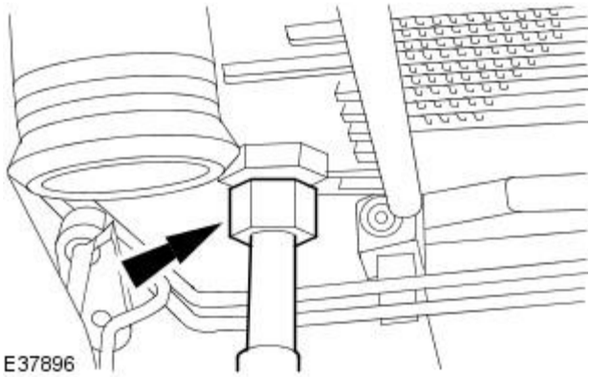

6. NOTE: Cap the exposed ports.

Disconnect the transmission oil cooler lower pipe.

- Remove and discard the O-ring seal.

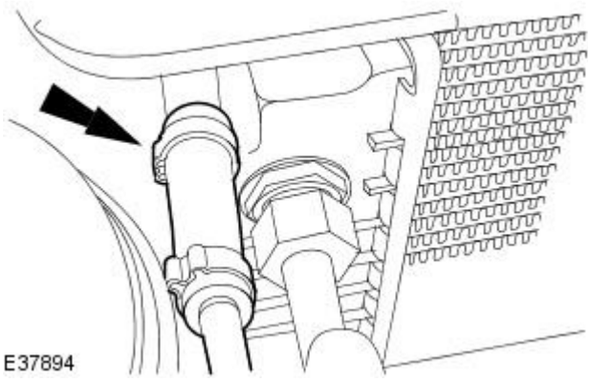

7. Disconnect the radiator vent hose.

- Release the retaining clip.

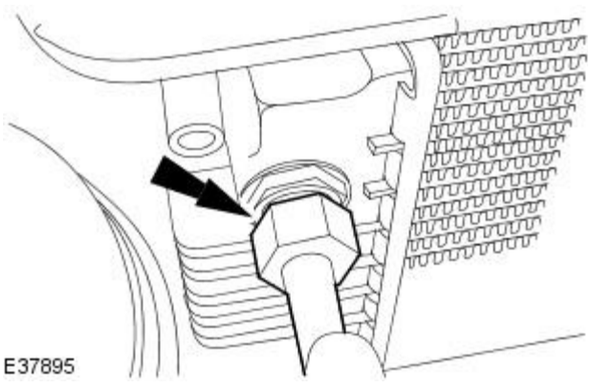

8. NOTE: Cap the exposed ports.

Disconnect the transmission oil cooler upper pipe.

- Remove and discard the O-ring seal.

Vehicles with convertible top

9. Remove the radiator grille opening cross brace.
For additional information, refer to Section 501-02 Front End Body Panels.

All vehicles

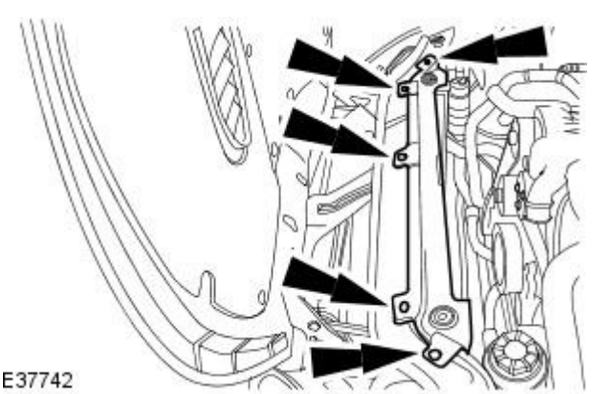

10. Remove the radiator.

- Remove the radiator support bracket.

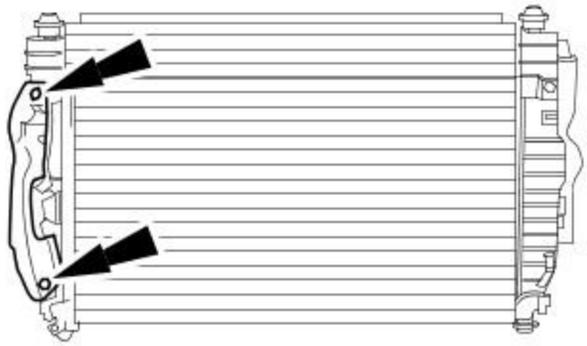
E37728

11. Remove the condenser pipe protection bracket.

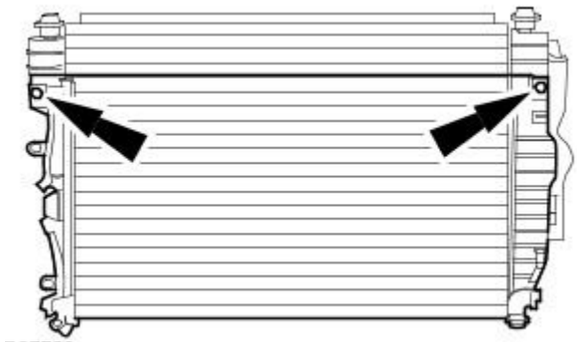
E37729

12. Remove the radiator.

- Remove the retaining bolts.

Installation

All vehicles

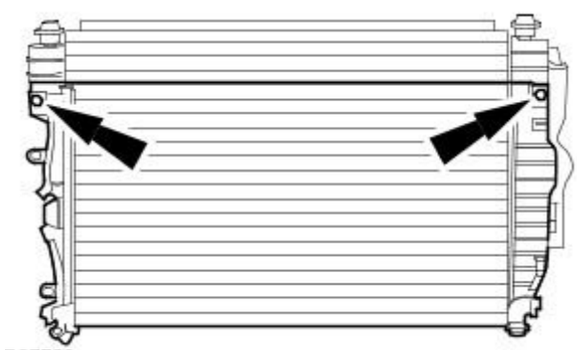
E37729

1. Install the radiator.

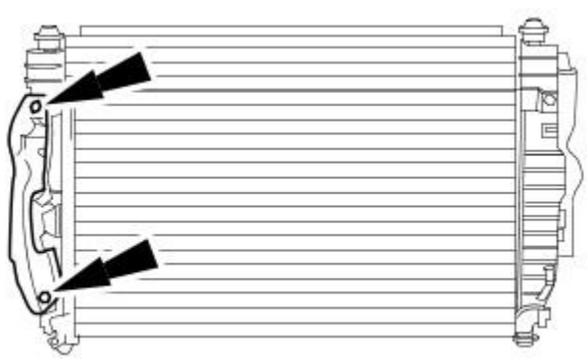
E37728

2. Install the condenser pipe protective bracket.

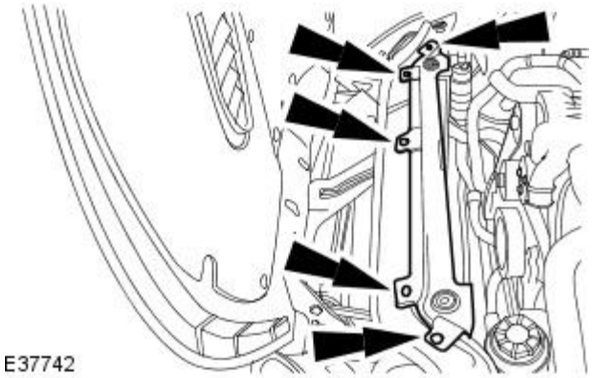

3. Install the radiator.

- Tighten to 10 Nm.

Vehicles with convertible top

4. Install the radiator grille opening cross brace.
For additional information, refer to Section 501-02 Front End Body Panels.

All vehicles

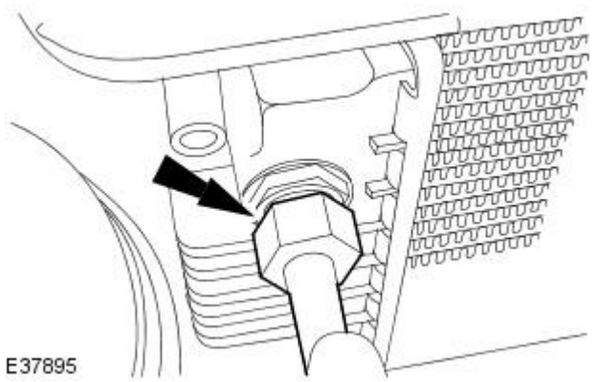

5. NOTE: Uncap the ports.

Connect the transmission oil cooler upper pipe.

- Install a new O-ring seal.
- Tighten to 20 Nm.

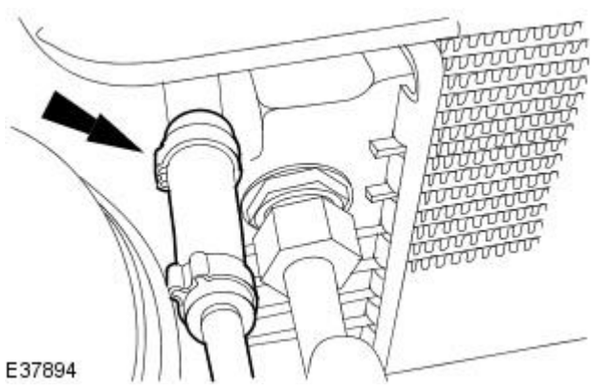

6. Connect the radiator vent hose.

- Install the retaining clip.

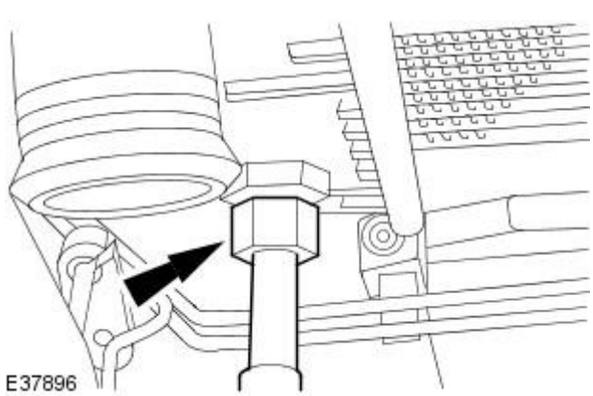

7. NOTE: Uncap the ports.

Connect the transmission oil cooler lower pipe.

- Install a new O-ring seal.
- Tighten to 20 Nm.

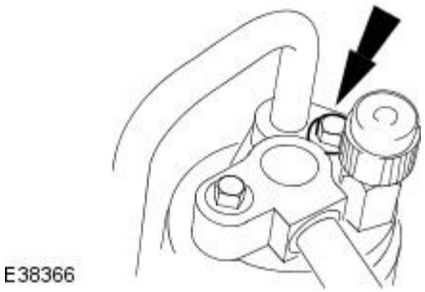

8. NOTE: Uncap the ports.

Install the receiver drier to condenser pipe.

- Install a new O-ring seal.
- Tighten to 10 Nm.

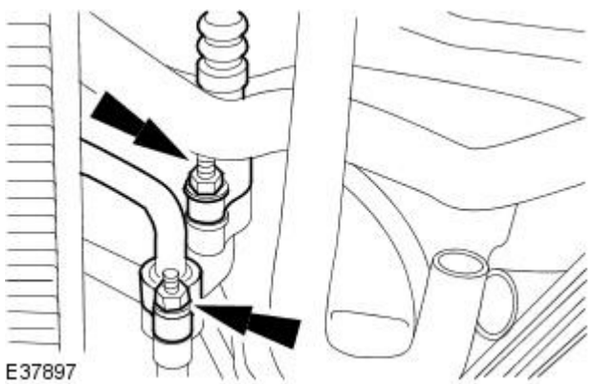

9. Connect the air conditioning pipes.

- Uncap the exposed ports.
- Install new O-ring seals.
- Tighten to 10 Nm.

10. Clean off any oil residue that may contain A/C system fluorescent dye.

- Lubricate the new 0-ring with A/C refrigerant oil.

11. Install the cooling fan motor and shroud.
For additional information, refer to Cooling Fan Motor and Shroud in this section.

12. Install the supercharger coolant pump. For additional information, refer to Section 303-03A Engine Cooling / 303-03B Supercharger Cooling.

13. Carry out the air conditioning (A/C) evacuation and charging procedure. For additional information, refer to Section 412-00 Climate Control System - General Information.

Engine Cooling - ThermostatV8 4.2L Petrol

Removal and Installation

Removal

• WARNINGS:

Never remove the coolant pressure cap under any circumstances while the engine is operating. Failure to follow this instruction may result in personal injury.

To avoid having scalding hot coolant or steam blow out of the cooling system, use extreme care when removing the coolant pressure cap from a hot cooling system. Wait until the engine has cooled, then wrap a thick cloth around the coolant pressure cap and turn it slowly until the pressure begins to release. Step back while the pressure is released from the system. When certain all the pressure has been released (still with a cloth) turn and remove the coolant pressure cap from the coolant expansion tank. Failure to follow these instructions may result in personal injury.

To avoid the possibility of personal injury, do not operate the engine with the hood open until the fan blades have been examined for cracks and separation. Failure to follow this instruction may result in personal injury.

Remove fuse 14 from the engine management fuse box prior to performing any under hood service in the area of the cooling fan when the engine is hot, since the cooling fan motor could operate if the engine has been switched OFF. Failure to follow this instruction may result in personal injury.

CAUTION: The engine cooling system must be maintained with the correct concentration and type of anti-freeze solution to prevent corrosion and frost damage. Failure to follow this instruction may cause damage to the vehicle.

1. Drain the cooling system.
   For additional information, refer to: Cooling System Draining, Filling and Bleeding (303-03A Engine Cooling, General Procedures).
2. Lower the vehicle.
3. Detach the coolant hose.

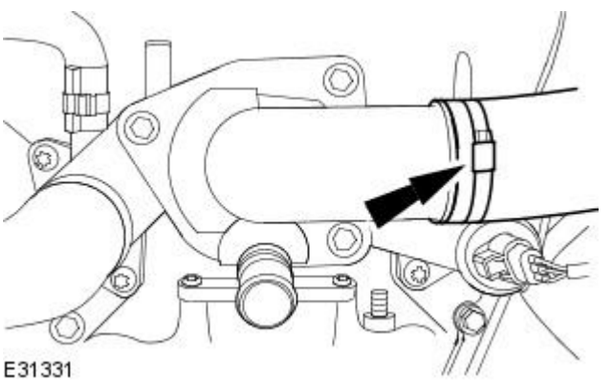

E31331

4. Remove the thermostat.
   - Remove and discard the O-ring seal.

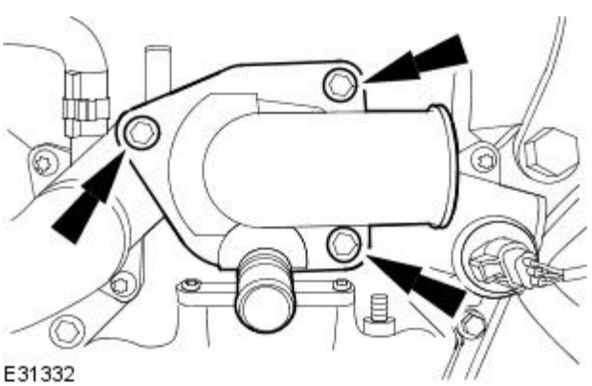

E31332

Installation

1. To install, reverse the removal procedure.

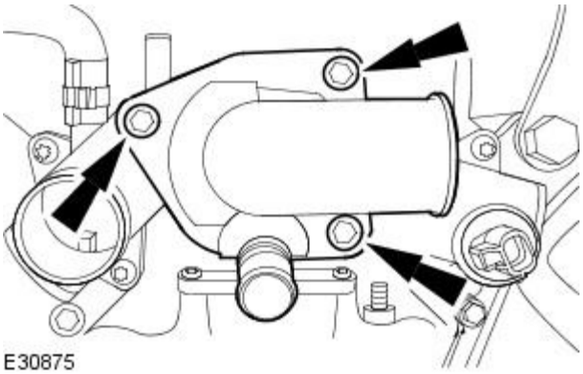

2. Tighten to 9 Nm.

- Install a new O-ring seal.

3. Fill the cooling system.
For additional information, refer to: Cooling System Draining, Filling and Bleeding (303-03A Engine Cooling, General Procedures).

4. NOTE: For NAS vehicles only.

If required, carry out a long drive cycle.
For additional information, refer to: Powertrain Control Module (PCM) Long Drive Cycle Self-Test (303-14 Electronic Engine Controls, General Procedures).

Engine Cooling - ThermostatV8 S/C 4.2L Petrol

Removal and Installation

Removal

• WARNINGS:

Never remove the coolant pressure cap under any circumstances while the engine is operating. Failure to follow this instruction may result in personal injury.

To avoid having scalding hot coolant or steam blow out of the cooling system, use extreme care when removing the coolant pressure cap from a hot cooling system. Wait until the engine has cooled, then wrap a thick cloth around the coolant pressure cap and turn it slowly until the pressure begins to release. Step back while the pressure is released from the system. When certain all the pressure has been released (still with a cloth) turn and remove the coolant pressure cap from the coolant expansion tank. Failure to follow these instructions may result in personal injury.

To avoid the possibility of personal injury, do not operate the engine with the hood open until the fan blades have been examined for cracks and separation. Failure to follow this instruction may result in personal injury.

Remove fuse 14 from the engine management fuse box prior to performing any under hood service in the area of the cooling fan when the engine is hot, since the cooling fan motor could operate if the engine has been switched OFF. Failure to follow this instruction may result in personal injury.

CAUTION: The engine cooling system must be maintained with the correct concentration and type of anti-freeze solution to prevent corrosion and frost damage. Failure to follow this instruction may cause damage to the vehicle.

1. Drain the cooling system.
   For additional information, refer to: Cooling System Draining, Filling and Bleeding (303-03A Engine Cooling, General Procedures).
2. Lower the vehicle.
3. Detach the coolant hose hose.

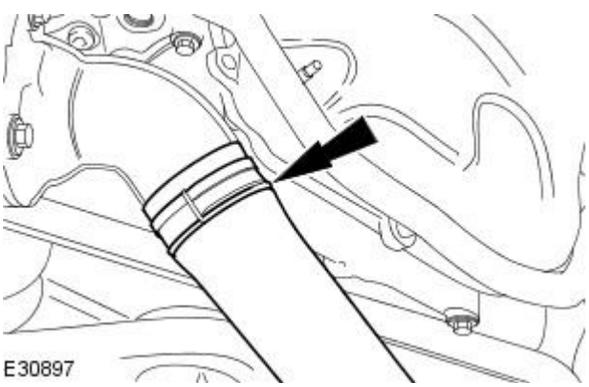

4. Remove the thermostat housing cover.

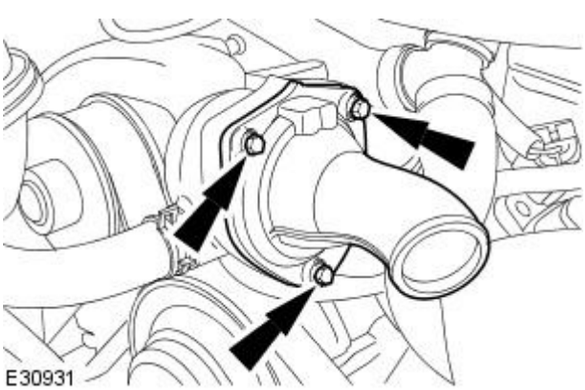

5. Remove the thermostat.
   - Remove and discard the O-ring seal.

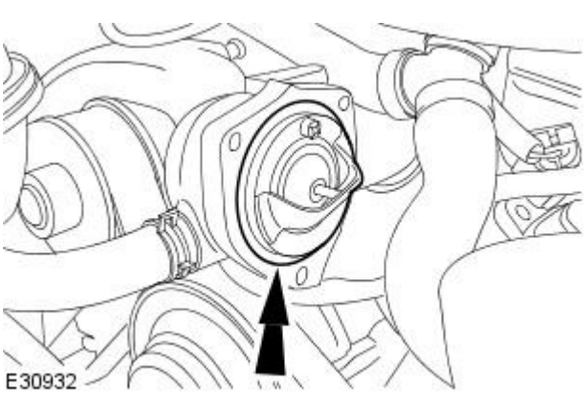

Installation

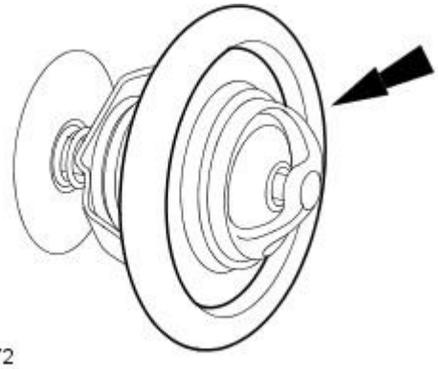

VUJ0000172

1. CAUTION: Make sure the thermostat bypass valve is at the 12 O`clock position.

To install, reverse the removal procedure.

- Install a new O-ring seal.

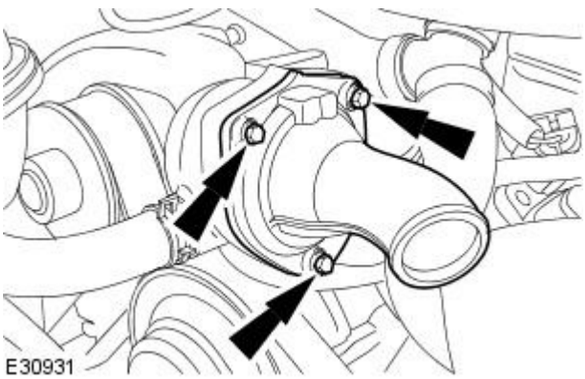

E30931

2. Tighten to 9 Nm.

3. Fill the cooling system.
For additional information, refer to: Cooling System Draining, Filling and Bleeding (303-03A Engine Cooling, General Procedures).

4. NOTE: For NAS vehicles only.

If required, carry out a long drive cycle.
For additional information, refer to: Powertrain Control Module (PCM) Long Drive Cycle Self-Test (303-14 Electronic Engine Controls, General Procedures).

Engine Cooling - Water PumpV8 4.2L Petrol

Removal and Installation

Removal

• WARNINGS:

Never remove the coolant pressure cap under any circumstances while the engine is operating. Failure to follow this instruction may result in personal injury.

To avoid having scalding hot coolant or steam blow out of the cooling system, use extreme care when removing the coolant pressure cap from a hot cooling system. Wait until the engine has cooled, then wrap a thick cloth around the coolant pressure cap and turn it slowly until the pressure begins to release. Step back while the pressure is released from the system. When certain all the pressure has been released (still with a cloth) turn and remove the coolant pressure cap from the coolant expansion tank. Failure to follow these instructions may result in personal injury.

To avoid the possibility of personal injury, do not operate the engine with the hood open until the fan blades have been examined for cracks and separation. Failure to follow this instruction may result in personal injury.

Remove fuse 14 from the engine management fuse box prior to performing any under hood service in the area of the cooling fan when the engine is hot, since the cooling fan motor could operate if the engine has been switched OFF. Failure to follow this instruction may result in personal injury.

CAUTION: The engine cooling system must be maintained with the correct concentration and type of anti-freeze solution to prevent corrosion and frost damage. Failure to follow this instruction may cause damage to the vehicle.

1. Drain the cooling system.
   For additional information, refer to Cooling System Draining, Filling and Bleeding in this section.
2. Lower the vehicle.
3. Loosen the water pump pulley bolts.

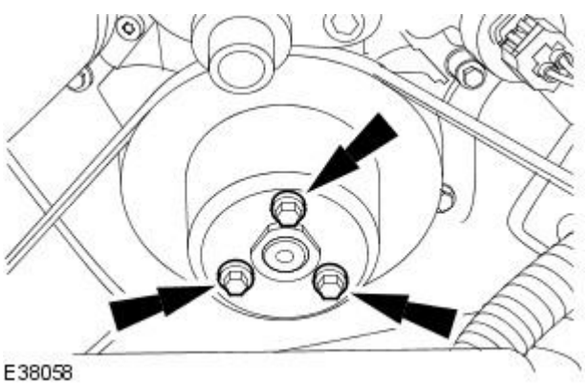

4. NOTE: Rotate the accessory drive belt tensioner counter-clockwise.

   Detach the accessory drive belt.

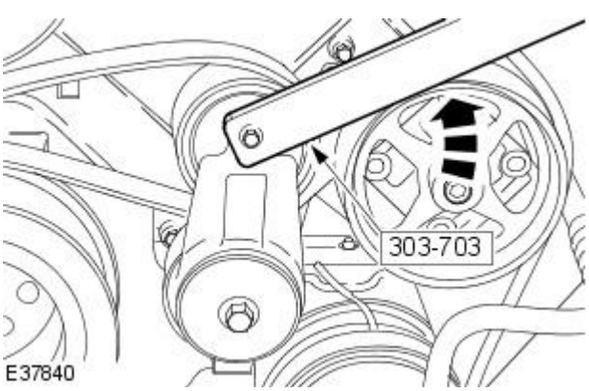

5. Remove the water pump pulley.
   - Discard the water pump pulley retaining bolts.

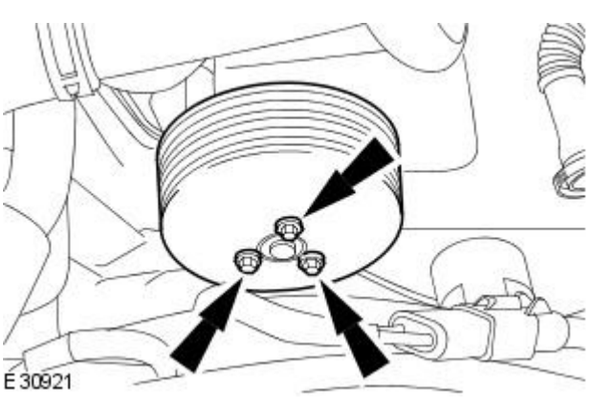

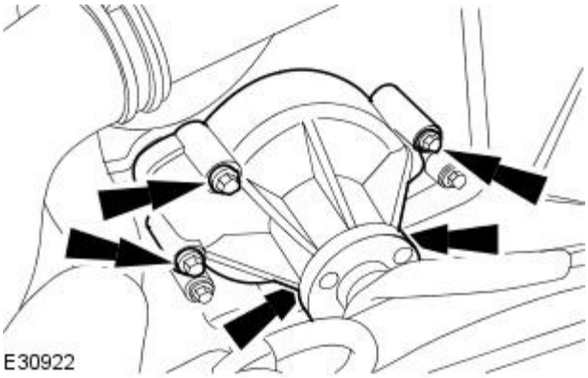

6. Remove the water pump.

- Remove and discard the gasket and O-ring seal.

Installation

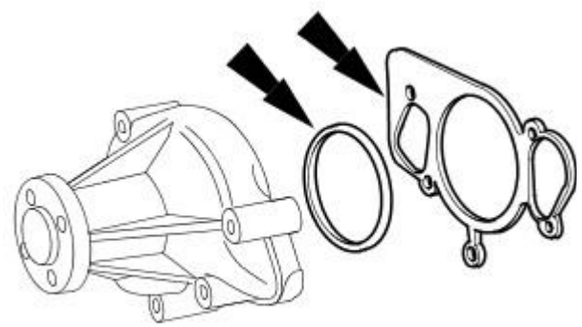

1. To install, reverse the removal procedure.

- Install a new water pump gasket and O-ring seal.

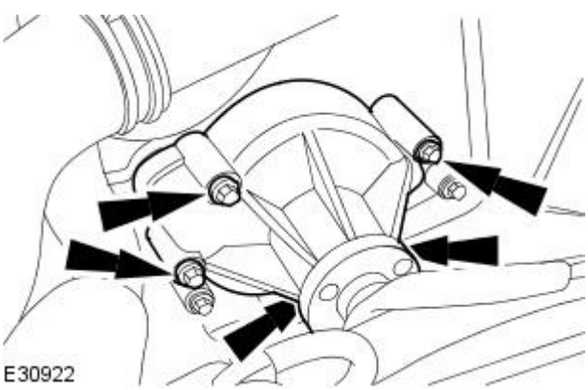

2. Tighten to 8 Nm + 90°

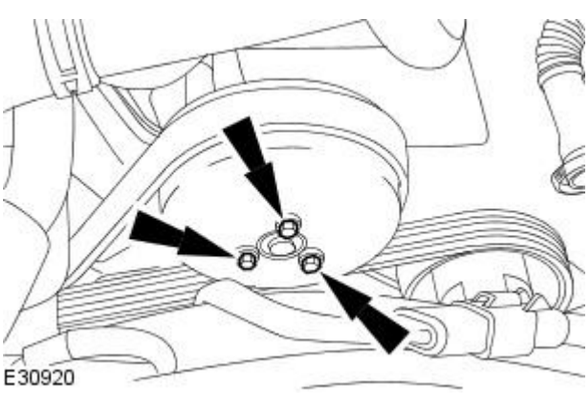

3. Tighten to 10 Nm + 45°.

- Install new retaining bolts.

4. Fill the cooling system.
For additional information, refer to Cooling System Draining, Filling and Bleeding in this section.

Engine Cooling - Water PumpV8 S/C 4.2L Petrol

Removal and Installation

Removal

• WARNINGS:

Never remove the coolant pressure cap under any circumstances while the engine is operating. Failure to follow this instruction may result in personal injury.

To avoid having scalding hot coolant or steam blow out of the cooling system, use extreme care when removing the coolant pressure cap from a hot cooling system. Wait until the engine has cooled, then wrap a thick cloth around the coolant pressure cap and turn it slowly until the pressure begins to release. Step back while the pressure is released from the system. When certain all the pressure has been released (still with a cloth) turn and remove the coolant pressure cap from the coolant expansion tank. Failure to follow these instructions may result in personal injury.

To avoid the possibility of personal injury, do not operate the engine with the hood open until the fan blades have been examined for cracks and separation. Failure to follow this instruction may result in personal injury.

Remove fuse 14 from the engine management fuse box prior to performing any under hood service in the area of the cooling fan when the engine is hot, since the cooling fan motor could operate if the engine has been switched OFF. Failure to follow this instruction may result in personal injury.

CAUTION: The engine cooling system must be maintained with the correct concentration and type of anti-freeze solution to prevent corrosion and frost damage. Failure to follow this instruction may cause damage to the vehicle.

1. Drain the cooling system.
   For additional information, refer to Cooling System Draining, Filling and Bleeding in this section.
2. Lower the vehicle.
3. Loosen the water pump pulley bolts.

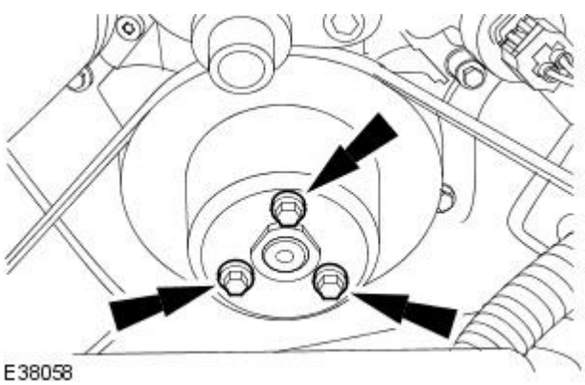

4. NOTE: Rotate the accessory drive belt tensioner counter-clockwise.

   Detach the accessory drive belt.

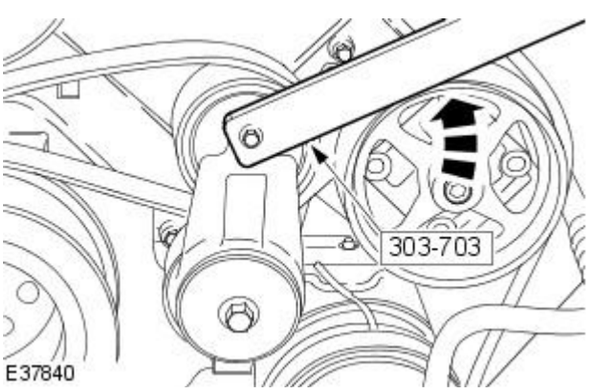

5. Remove the water pump pulley.
   - Discard the water pump pulley retaining bolts.

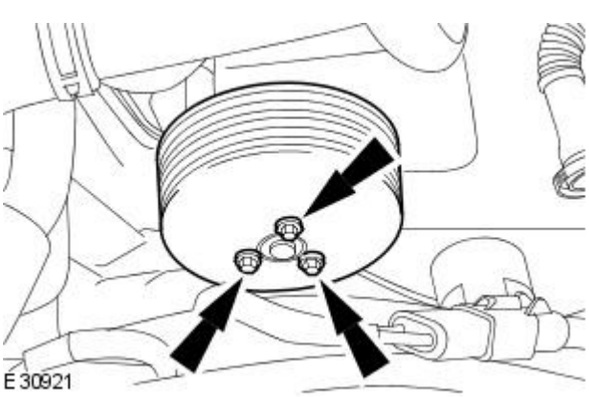

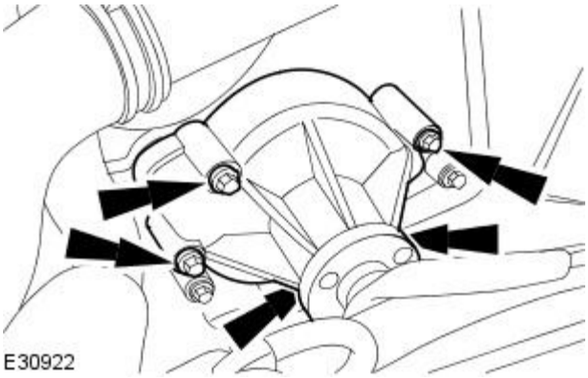

6. Remove the water pump.

- Remove and discard the gasket and O-ring seal.

Installation

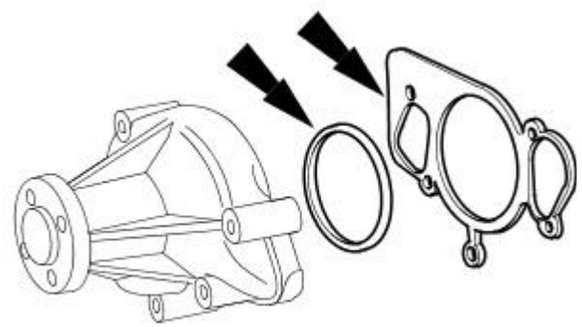

1. To install, reverse the removal procedure.

- Install a new gasket and O-ring seal.

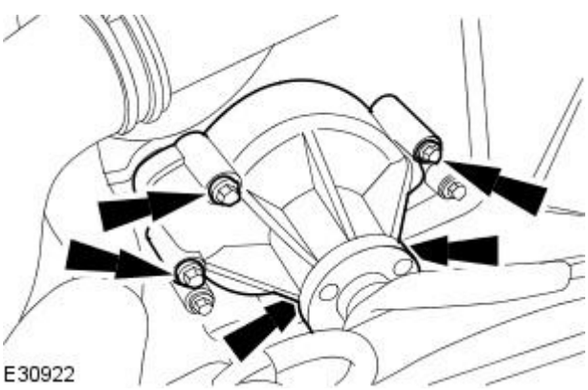

2. Tighten to 8 Nm + 90°

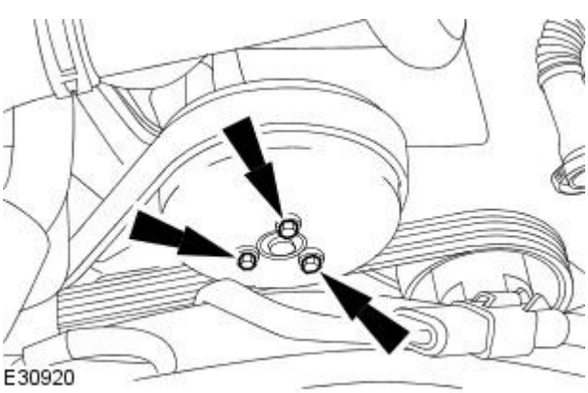

3. Tighten to 10 Nm + 45°.

- Install new retaining bolts.

4. Fill the cooling system.
For additional information, refer to Cooling System Draining, Filling and Bleeding in this section.

Supercharger Cooling -

Torque Specifications

Description	Nm	lb-ft	lb-in
Engine oil cooler retaining bolts	7	-	62
Cooling module retaining bolts	7	-	62
Charge air cooler water pump bracket retaining bolts	7	-	62
Charge air cooler radiator drain plug	1	-	9
Supercharger coolant fill plug	45	33	-

Lubricants, Fluids, Sealers and Adhesives

Description	Specification
Jaguar Premium Cooling System Fluid	WSS M97B44-D

Published: 11-May-2011

Supercharger Cooling - Supercharger Cooling

Description and Operation

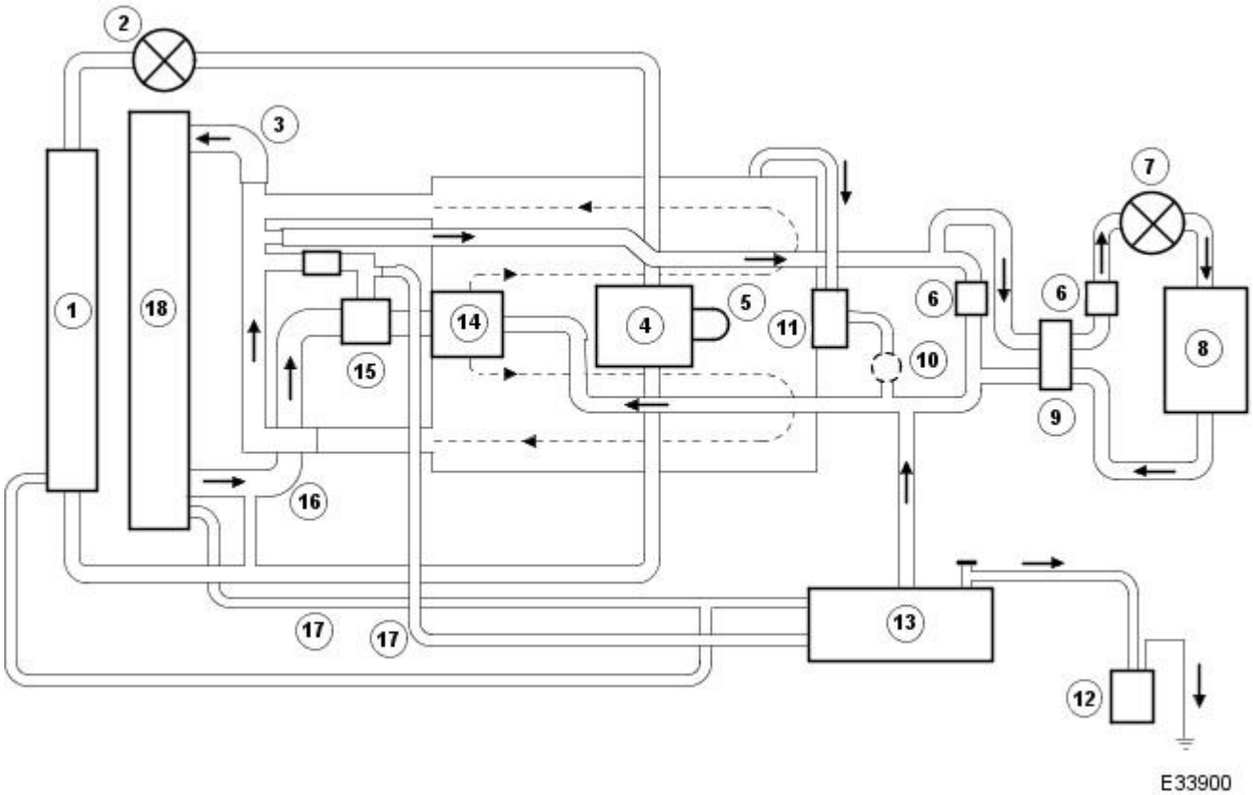

Item	Description
1	Radiator - intake air coolant
2	Electrically operated coolant pump
3	Top hose
4	Charge air coolers - intake air cooling
5	Filling point for intake air cooling
6	Non-return valves - heater
7	Electrically operated coolant pump
8	Heater core
9	Water valve - heater control
10	EGR valve
11	Throttle body
12	Degas bottle
13	Expansion tank
14	Water pump
15	Thermostat housing
16	Bottom hose
17	Air bleed pipes
18	Radiator - main cooling system

The cooling system for the supercharged engine is very similar to the normally aspirated engine, but with the addition of a water cooled, intake air charge cooling system. This comprises a radiator, an electrically operated water pump and two charge air cooler assemblies (heat exchangers). The system works independently, but is connected to the main cooling system at the bottom hose to allow for thermal expansion and to help to prevent unwanted circulation.

The supercharger cooling system is integrated with in the engine cooling system but uses a separate radiator and electrical water pump.

Radiator

The supercharger radiator is of aluminium construction. The radiator is mounted to the cooling module between the oil cooler and the air conditioning condenser. A coolant drain plug is located at the left-hand bottom of the radiator.

Water pump

The charge air cooler water pump is electrically driven, continuously while the ignition is on. The charge air cooler water pump provides an efficient coolant flow to the charge air coolers.

Published: 11-May-2011

Supercharger Cooling - Supercharger Cooling

Diagnosis and Testing

1. **1.** Verify the customer concern by operating the system.
2. **2.** Visually inspect for obvious signs of mechanical and electrical damage.

Visual Inspection Chart

Mechanical	Electrical
• Leak(s) • Hose(s) • Charge air cooler radiator • Supercharger cooling water pump • Coolant expansion tank • Coolant pressure cap • Radiator • Engine cooling water pump • Cooling fan	• Fuse(S) • Wiring harness • Electrical connector(S) • Engine coolant temperature sensor • Cooling fan motor • Supercharger cooling water pump

3. **3.** If an obvious cause for an observed or reported concern is found, correct the cause (if possible) before proceeding to the next step.
4. **4.** If the cause is not visually evident, verify the symptom and refer to the Jaguar Approved Diagnostic System.

Component tests

Pressure test. REFER to Section 303-03A Engine Cooling / 303-03B Supercharger Cooling. Coolant pressure cap pressure test. REFER to Section 303-03A Engine Cooling / 303-03B Supercharger Cooling. Thermostat test. REFER to Section 303-03A Engine Cooling / 303-03B Supercharger Cooling. Radiator leak test. REFER to Section 303-03A Engine Cooling / 303-03B Supercharger Cooling.

Supercharger Cooling - Supercharger Cooling System Draining, Filling and Bleeding

General Procedures

1. WARNINGS:

Never remove the coolant expansion tank pressure cap under any circumstances while the engine is operating. Failure to follow this instruction may result in personal injury.

To avoid hot coolant or steam blowing out of the cooling system, use extreme care when removing the coolant expansion tank pressure cap. Wait until the engine has cooled down, then insulate the coolant pressure cap with a suitable cloth and slowly loosen the coolant expansion tank pressure cap until the cooling system pressure is released. Do not remove the coolant expansion tank pressure cap. Step back while the pressure is released from the system. When all of the pressure has been released slowly remove the coolant expansion tank pressure cap (still with the suitable cloth in position) from the coolant expansion tank. Failure to follow this instruction may result in personal injury.

Remove fuse 14 from the engine management fuse box prior to performing any under hood service in the area of the cooling fan when the engine is hot, since the cooling fan motor could operate if the engine has been switched OFF. Failure to follow this instruction may result in personal injury.

• CAUTIONS:

The engine cooling system must be maintained with the correct concentration and type of anti-freeze solution to prevent corrosion and frost damage.

Never remove the coolant pressure cap under any circumstances while the engine is operating. Failure to follow this instruction may result in damage to the engine.

Release the cooling system pressure.

- Remove the expansion tank cap.

2. Raise and support the vehicle.
For additional information, refer to Section 100-02 Jacking and Lifting.

3. Remove the radiator drain plug.

- Drain the coolant into a suitable container.

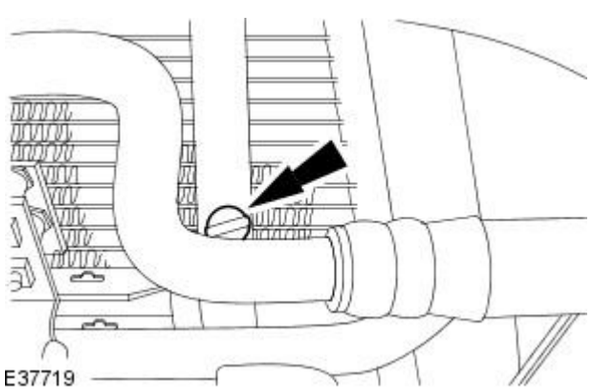

4. CAUTION: Do not over tighten the radiator drain plug. Failure to follow this instruction may cause damage to the vehicle.

Install the radiator drain plug when all coolant has drained.

- Remove the container.
- Clean off any spillages.

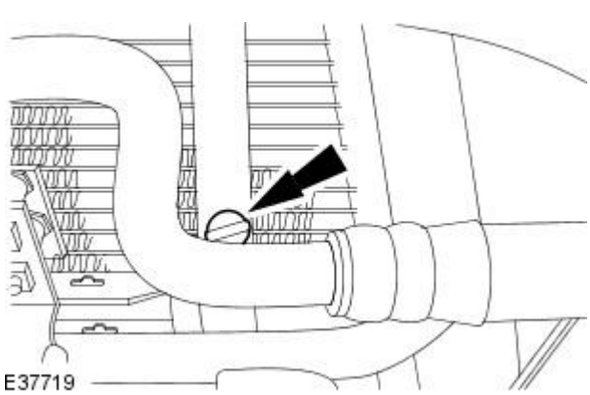

5. CAUTION: The supercharger cooling system must be maintained with the correct concentration and type of coolant solution to prevent corrosion and frost damage.

• NOTE: Jaguar recommends filling the cooling system with softened water.

Fill the cooling system up to the MAX mark on the coolant expansion tank using a fifty percent mixture of Jaguar Premium Cooling System Fluid or equivalent, meeting Jaguar specification WSS M97B44-D and fifty percent water.

6. Install the expansion tank pressure cap.

7. Remove the supercharger coolant fill plug.

- Remove and discard the sealing washer.

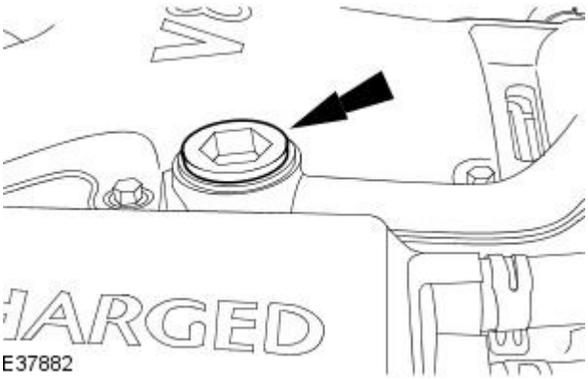

8. NOTE: Place a suitable cloth around supercharger fill port.

• NOTE: Jaguar recommends filling the cooling system with softened water.

Top up the coolant through the supercharger fill port.

9. CAUTION: Coolant may spill from supercharger fill port when ignition switched on.

Switch ignition on.

10. CAUTION: Do not allow the supercharger water pump to run dry for more than one minute. Failure to follow this instruction may result in damage to the vehicle.

Allow the supercharger water pump to run and top up the coolant through supercharger fill port.

11. Switch the ignition off.

12. Install the supercharger coolant fill plug.

- Install a new sealing washer.
- Tighten to 45 Nm.
- Clean off any spillages.

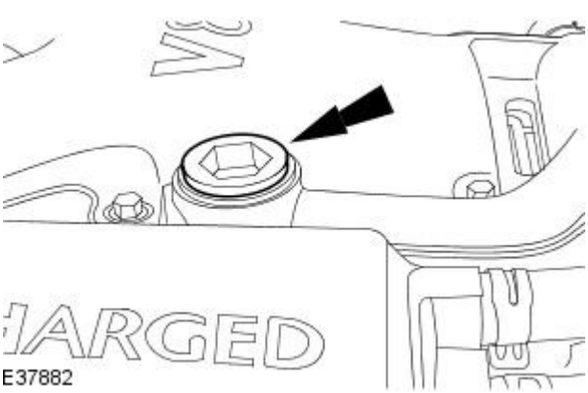

13. CAUTIONS:

Install fuse 14 to the engine management fuse box. Failure to follow this instruction may result in damage to the vehicle.

Do not RUN the engine with the coolant expansion tank pressure cap removed. Failure to follow this instruction may cause damage to the vehicle

START and RUN the engine.

14. SET the heating system to MAX heat, the blower motor to MAX speed and the air distribution to instrument panel registers.

15. CAUTION: Observe the engine temperature gauge. If the engine starts to over-heat switch off immediately and allow to cool. Failure to follow this instruction may cause damage to the vehicle.

Allow the engine to RUN until hot air is emitted from the instrument panel registers, while observing the engine temperature gauge.

16. Switch off the engine.

17. Allow the engine to cool.

18. Release the cooling system pressure.

- Remove the coolant expansion tank pressure cap.

19. CAUTION: The cooling system must be maintained with the correct concentration and type of coolant solution to prevent corrosion and frost damage.

• NOTE: Jaguar recommends filling the cooling system with softened water.

Fill the cooling system up to the MAX mark on the coolant expansion tank using a fifty percent mixture of Jaguar Premium Cooling System Fluid or equivalent, meeting Jaguar specification WSS M97B44-D and fifty percent water.

20. Install the coolant expansion tank pressure cap.

Supercharger Cooling - Radiator

Removal and Installation

Removal

1. Drain the supercharger cooling system.
   For additional information, refer to Supercharger Cooling System Draining, Filling and Bleeding in this section.
2. Remove the oil cooler.
   For additional information, refer to Section 303-01 Engine.
3. NOTE: Left-hand shown, right-hand similar.

   Remove the oil cooler mounts.

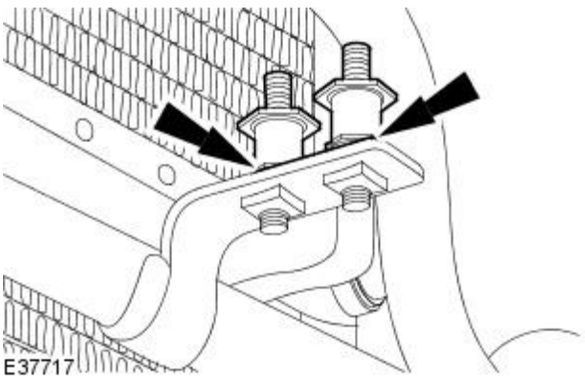

4. Detach the power steering fluid cooler.

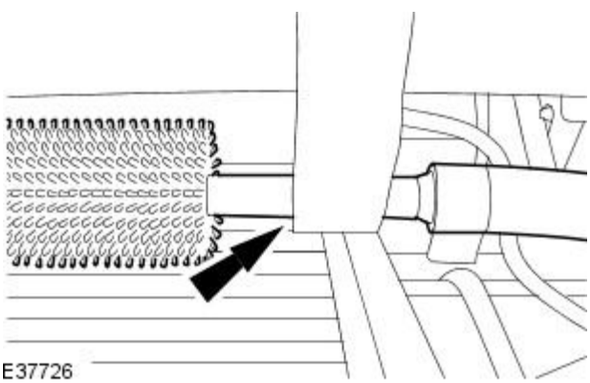

5. Detach the power steering fluid cooler.

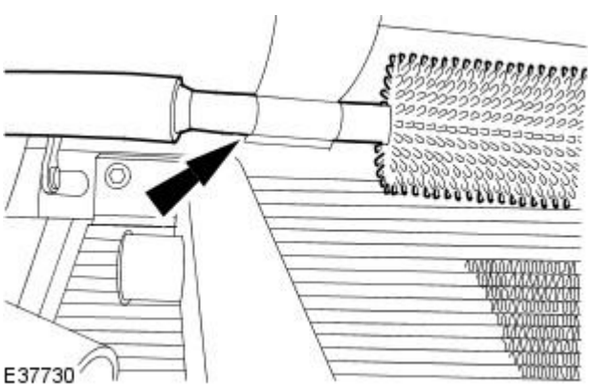

6. NOTE: Left-hand shown, right-hand similar.

   Remove the power steering oil cooler mounts.

   - Remove the retaining bolt.

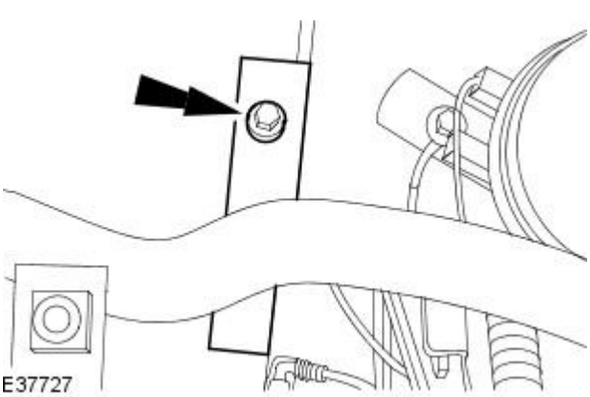

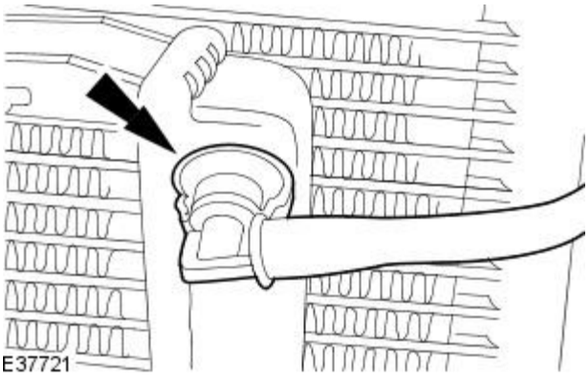

7. Disconnect the radiator coolant vent hose.

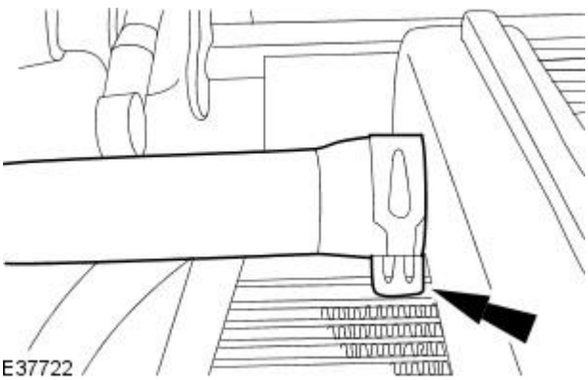

8. Disconnect the radiator coolant hose.

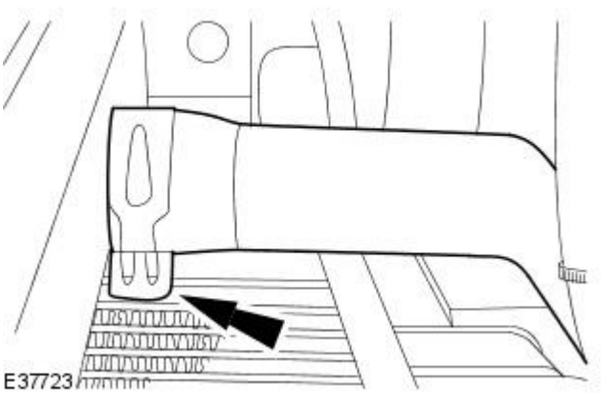

9. Disconnect the radiator coolant hose.

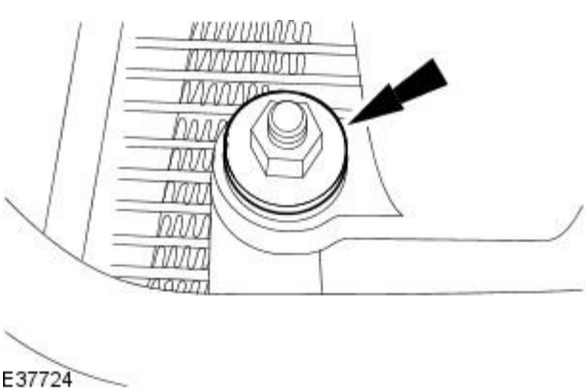

10. Remove the radiator retaining nut.

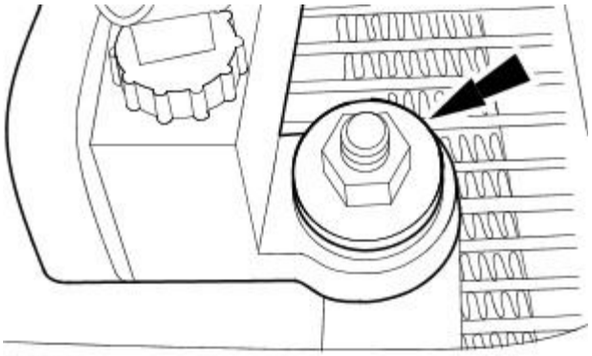

11. Remove the radiator.

- Remove the radiator retaining nut.

Installation

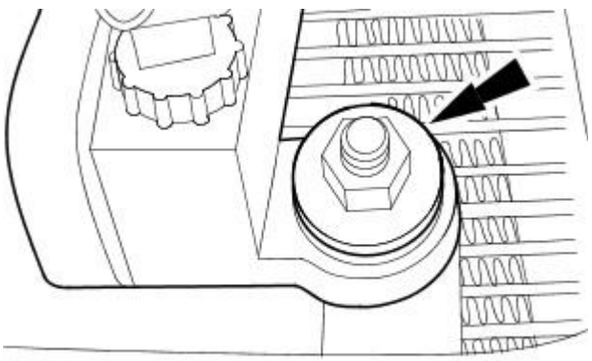

1. Install the radiator.

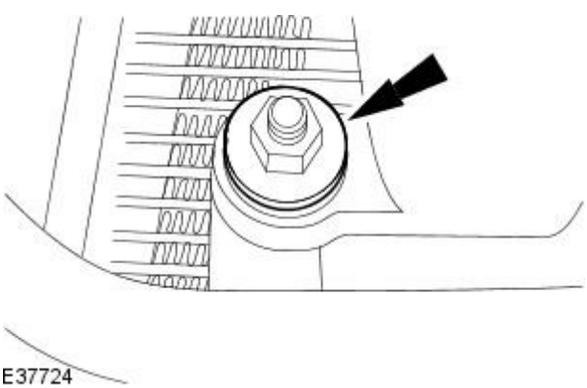

2. Install the radiator retaining nut.

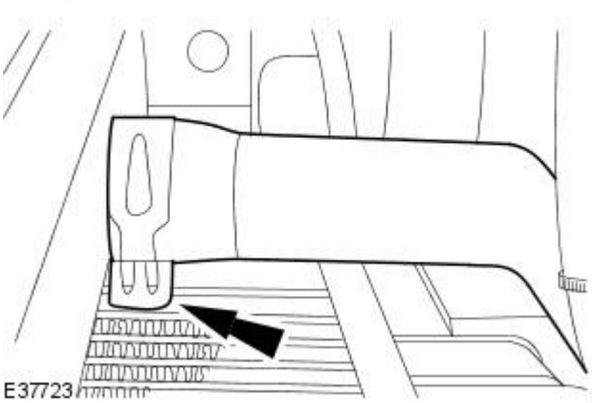

3. Connect the radiator coolant hose.

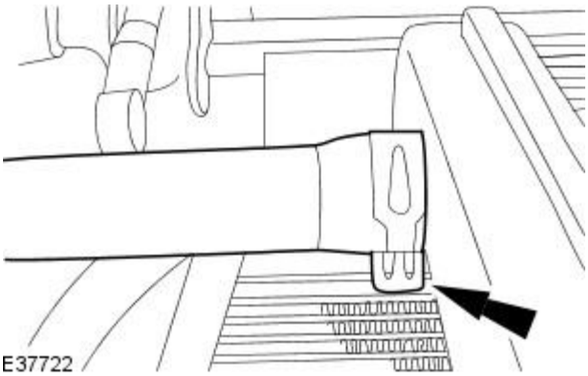

4. Connect the radiator coolant hose.

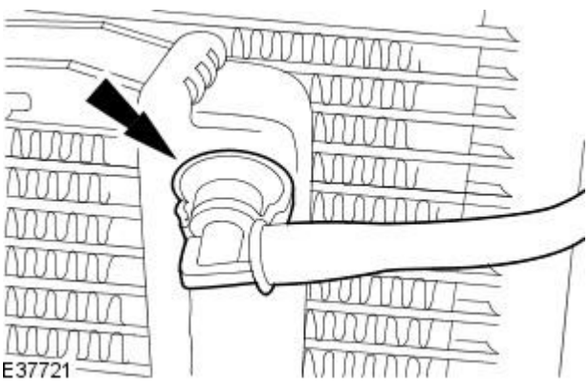

5. Connect the radiator coolant vent hose.

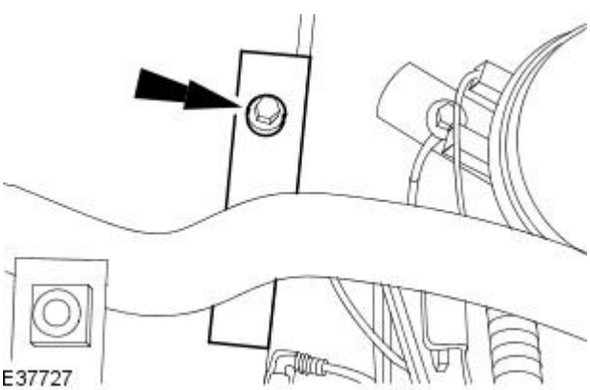

6. NOTE: Left-hand shown, right-hand similar.

Install the power steering fluid cooler mount.

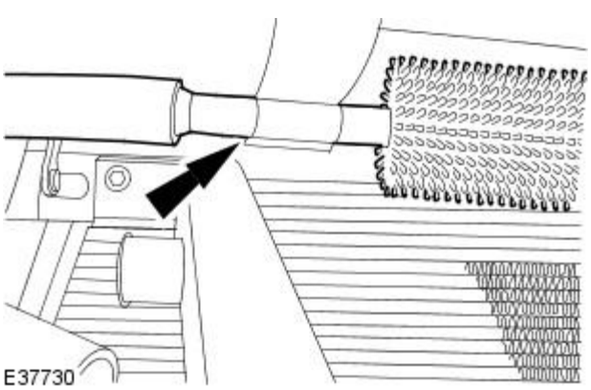

7. Attach the power steering fluid cooler.

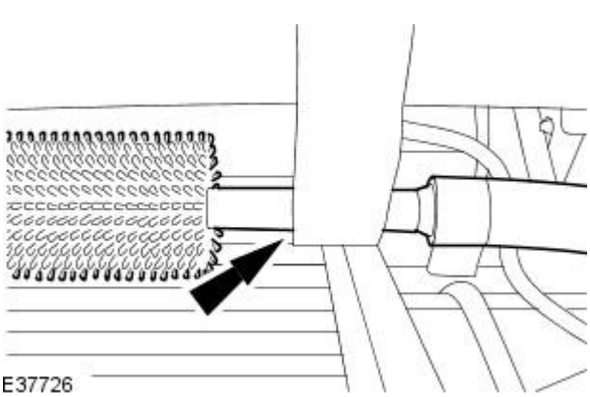

8. Attach the power steering fluid cooler.

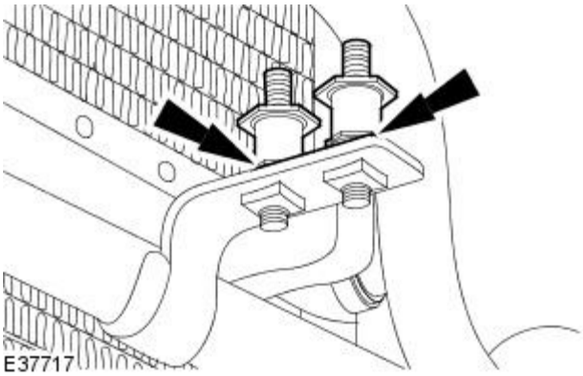

9. NOTE: Left-hand shown, right-hand similar.

Install the oil cooler mounts.

10. Install the oil cooler.
For additional information, refer to Section 303-01 Engine.

11. Fill the supercharger cooling system.
For additional information, refer to Supercharger Cooling System Draining, Filling and Bleeding in this section.

Supercharger Cooling - Water Pump

Removal and Installation

Removal

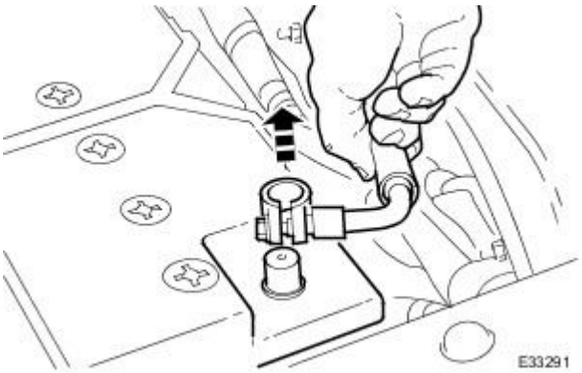

1. Open the driver's door, or both doors if necessary, to allow the side windows to drop. Ensure that the doors remain open until after the battery has been disconnected.
2. Disconnect the battery ground cable.
   - Remove the battery cover.

3. Open the engine compartment and fit paintwork protection sheets.
4. Set the engine compartment cover to the service access position.
5. Remove the air cleaner assembly. Refer to Operation 19.10.05.
6. Disconnect the harness electrical connector.
   1. Release the harness connector from the mounting bracket.
   2. Disconnect the harness connector.

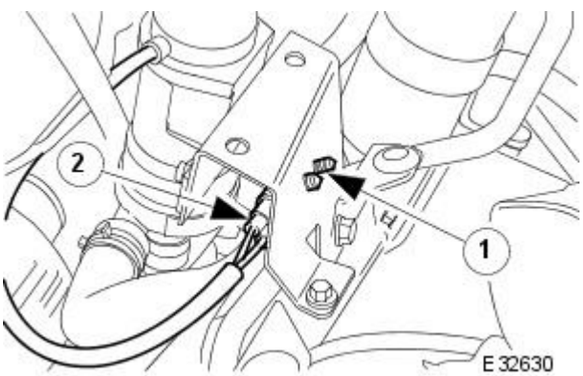

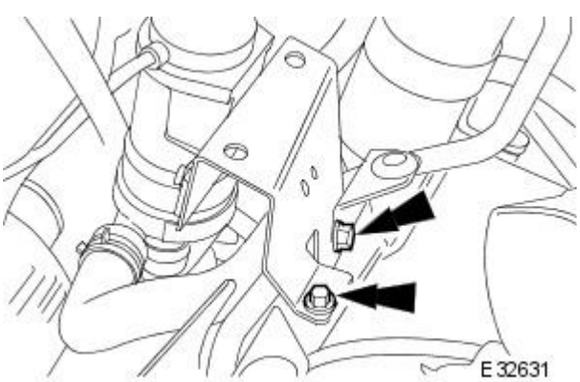

7. Remove the two bolts which secure the mounting bracket to the vehicle body.

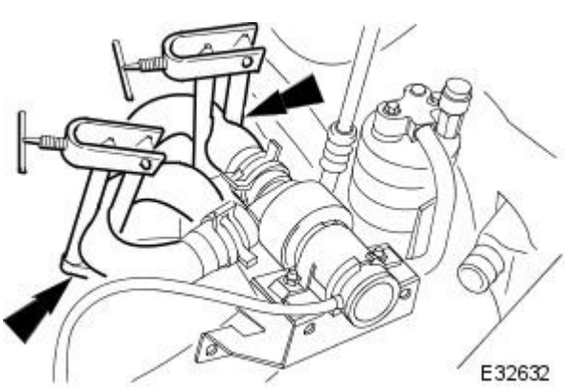

8. Reposition the pump to allow hose clamps to be fitted.
   - Fit a hose clamp to the inlet pipe and one to the outlet pipe.

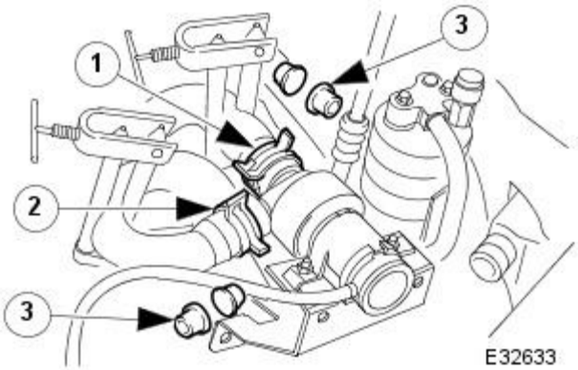

9. Disconnect the pipes from the pump and remove the pump.

1. Release and reposition the hose clip along the inlet hose and disconnect the hose.
2. Release and reposition the hose clip along the outlet hose and disconnect the pump from the hose.
3. Fit blanking plugs to the pipes and to the pump.

- Remove the pump and mounting bracket assembly from the vehicle.

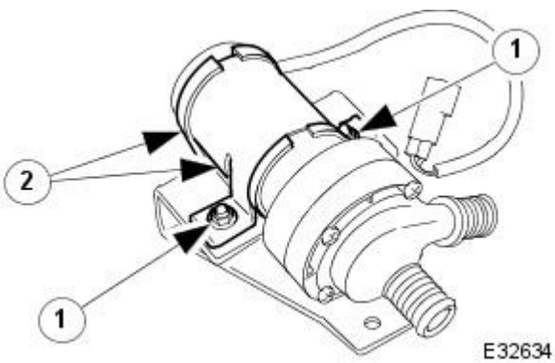

10. Remove the mounting bracket from the pump.

1. Remove the nuts which secure the clamp.
2. Remove the bracket and insulation rubber from the pump.

11. Clean the adjacent area of any water spillage.

Installation

1. Fitting is the reverse of the removal procedure.

2. Connect the battery and fit the battery cover.

- Reset the side glass memory. Refer to the Battery Reconnection Procedure 86.15.15.

3. Switch on the ignition and allow the pump to operate for one minute to circulate coolant.

- Switch off the ignition.
- Top up the coolant. If necessary, refer to Operation 26.10.01 (SC) Coolant Refill Procedure.

4. NOTE: For NAS vehicles only.

If required, carry out a long drive cycle.
For additional information, refer to: Powertrain Control Module (PCM) Long Drive Cycle Self-Test (303-14 Electronic Engine Controls, General Procedures).

Published: 11-May-2011

Fuel Charging and Controls -

Torque Specifications

Description	Nm	lb-ft	lb-in
Fuel injection supply manifold retaining bolts	9	-	80
Fuel pressure regulator retaining bolts	5	-	44
Throttle body retaining bolts	10	-	89
Engine cover retaining bracket retaining nuts	6	-	53

Fuel Charging and Controls - Fuel Charging and Controls

Description and Operation

Vehicles with supercharger

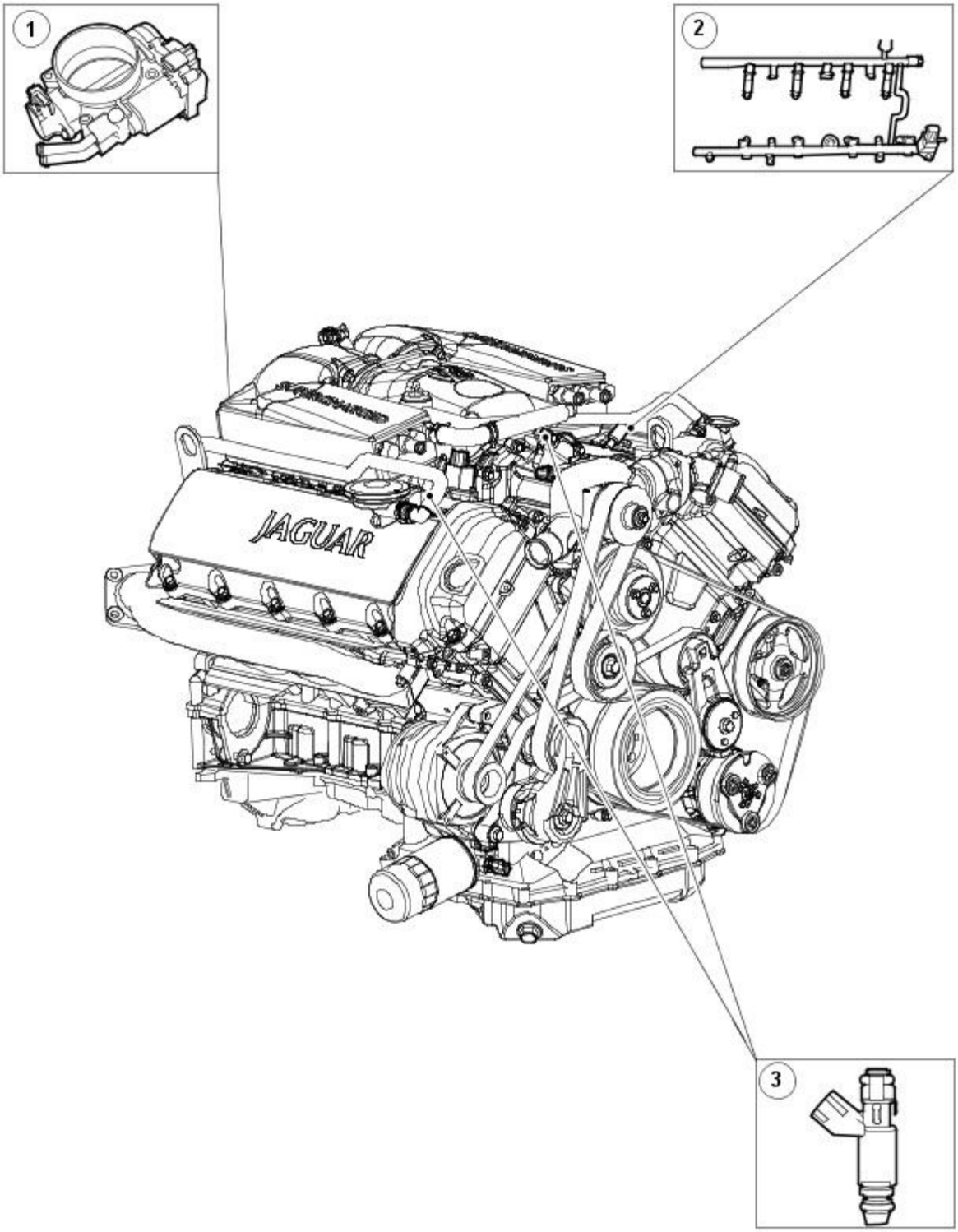

E38268

Item	Part Number	Description
1	—	Throttle body
2	—	Fuel injection supply manifold
3	—	Fuel injectors

Vehicles without supercharger

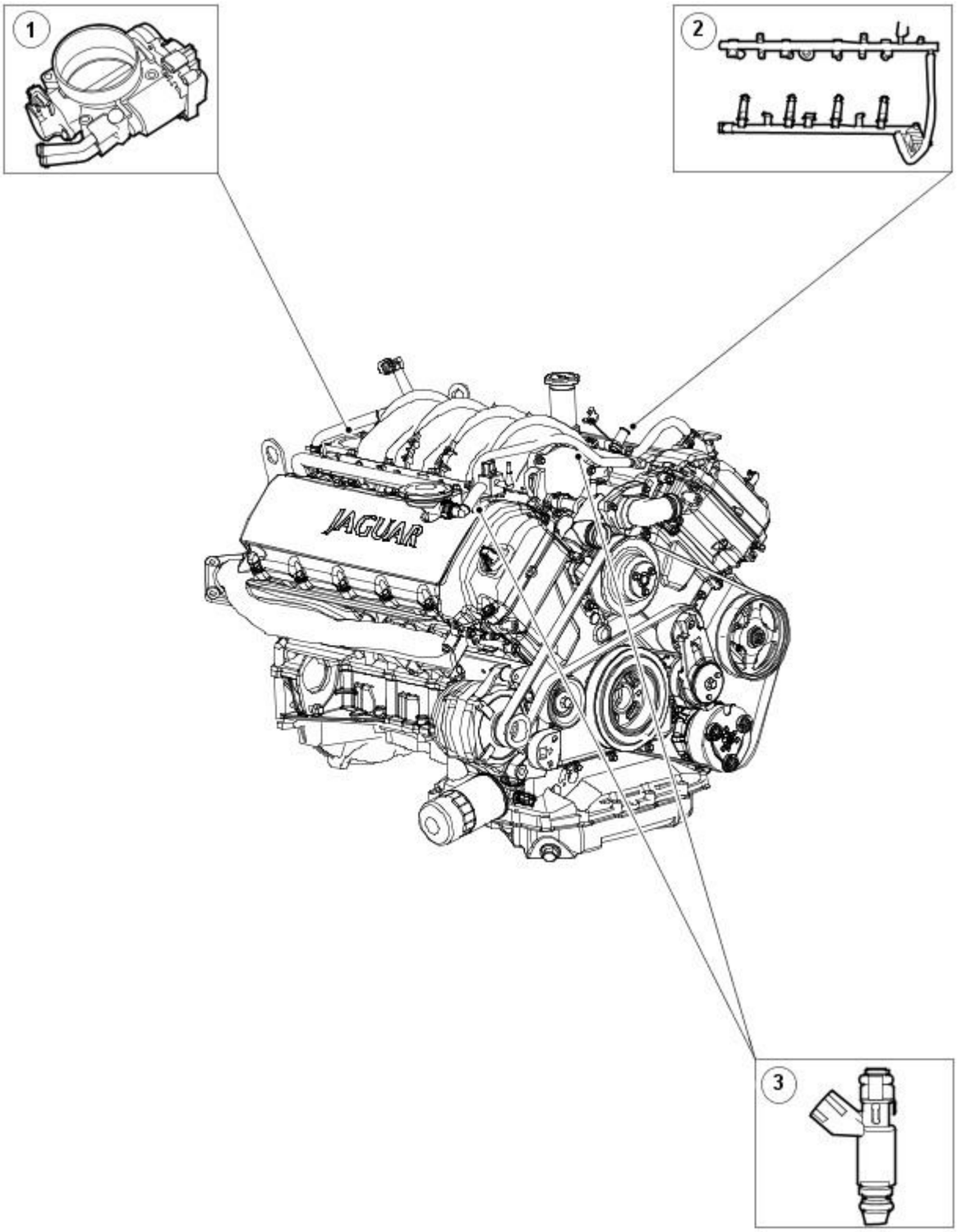

E38269

Item	Part Number	Description
1	—	Throttle body
2	—	Fuel injection supply manifold
3	—	Fuel injectors

The electronic returnless fuel system has the advantages of reduced fuel temperature and fuel tank vapor caused by constant fuel recirculation. The system delivers the correct amount of fuel to the engine under all conditions and at a constant pressure differential with respect to manifold absolute pressure.

Fuel is supplied at high pressure to the fuel injectors via a fuel injection supply manifold which incorporates fuel injectors, a fuel rail pressure (FRP) sensor and a fuel temperature sensor. The engine control module (ECM) increases the fuel pressure to minimize fuel vapor formation to maintain fuel flow across the injectors.

The throttle body assembly is calibrated during assembly, no adjustments are required or permitted. The throttle motor is a 12 volt DC motor which via movement of the throttle blade controls the amount of air flowing into the engine.

Fuel Charging and Controls - Fuel Charging and Controls

Diagnosis and Testing

Inspection and Verification

1. **1.** Verify the customer concern.
2. **2.** Confirm which, if any, warning lights and/or messages were displayed on the instrument cluster.

• NOTE: If any warning lights and/or messages were displayed when the fault occurred, refer to the Driver Information table for DTCs associated with the display, then to the DTC index table for possible sources and actions. Some warnings will appear to clear when the ignition is cycled. This is often because the warning has flagged as a result of one of the vehicle's on-board diagnostic routines having run to detect the fault. If the same routine is not run when the ignition is switched ON, the warning will not reflag until the routine does run. See the DTC summaries for drive cycle routines.

3. **3.** Visually inspect for obvious signs of mechanical or electrical damage.

Visual Inspection Chart

Mechanical	Electrical
• Engine oil level • Cooling system coolant level • Fuel level • Fuel Contamination/grade/quality • Throttle body • Poly-vee belt	• Fuses. • Wiring harness • Electrical connector(s) • Sensor(s) • Engine control module (ECM) • Transmission control module

4. **4.** Verify the following systems are working correctly:

- Air intake system
- Cooling system
- Charging system
- Ignition system

5. **5.** If an obvious cause for an observed or reported concern is found, correct the cause (if possible) before proceeding to the next step.
6. **6.** Where the Jaguar approved diagnostic system is available, complete the S93 report before clearing any or all fault codes from the vehicle.

• NOTE: If a DTC cannot be cleared, then there is a permanent fault present that flags again as soon as it is cleared. (The exception to this is P1260, which will only clear following an ignition OFF/ON cycle after rectification.)

7. **7.** If the cause is not visually evident and the Jaguar approved diagnostic system is not available, use a fault code reader to retrieve the fault codes before proceeding to the Diagnostic Trouble Code (DTC) Index Chart, or the Symptom Chart if no DTCs are set.
8. **8.** Using the Jaguar approved diagnostic system where available, and a scan tool where not, check the freeze frame data for information on the conditions applicable when the fault was flagged. The format of this will vary, depending on the tool used, but can provide information useful to the technician in diagnosing the fault.

CAUTION: When probing connectors to take measurements in the course of the pinpoint tests, use the adaptor kit, part number 3548-1358-00.

• NOTE: When performing electrical voltage or resistance tests, always use a digital multimeter (DMM) accurate to 3 decimal places, and with an up-to-date calibration certificate. When testing resistance, always take the resistance of the DMM leads into account.

• NOTE: Check and rectify basic faults before beginning diagnostic routines involving pinpoint tests.

Symptom Chart

Symptom	Possible source	Action
Engine cranks, but does not fire	• Engine breather system disconnected/restricted • Ignition system • Fuel system • Harness • CKP sensor • ECM fault	Check engine breather system, REFER to Section 303-08 Engine Emission Control. For ignition system, REFER to Section 303-07 Engine Ignition. Check fuel pressure, refer to pinpoint tests in this section. For CKP tests, REFER to Section 303-14 Electronic Engine Controls. Contact Dealer technical support for advice on possible ECM failure.
Engine cranks and fires, but will not start	• Purge valve • Fuel pump • Coolant temperature sensor • Spark plugs • Check for water ingress into spark plug wells (SC only) • HT short to ground (tracking) check rubber boots for cracks/damage • Ignition coil failure(s) • Harness	For evaporative emissions components, REFER to Section 303-13 Evaporative Emissions. Check fuel pressure. For ECT sensor tests, REFER to Section 303-14 Electronic Engine Controls. For ignition system REFER to Section 303-07 Engine Ignition.
Difficult to start cold	• Check coolant anti-freeze content • Battery • CKP sensor • EGR valve stuck open • Fuel pump • Coolant temperature sensor • Purge valve	For battery information, REFER to Section 414-01 Battery, Mounting and Cables. For CKP sensor tests, REFER to Section 303-14 Electronic Engine Controls. For EGR system information, REFER to Section 303-08 Engine Emission Control. Check fuel pressure. For ECT sensor tests, REFER to Section 303-14 Electronic Engine Controls. For evaporative emissions components,

Symptom	Possible source	Action
		REFER to Section 303-13 Evaporative Emissions.
Difficult to start hot	• Injector leak • Fuel temperature sensor • IAT sensor • MAF sensor • Purge valve • Fuel pump • Ignition system • Coolant temperature sensor • EGR valve stuck open	REFER to Fuel Injectors in this section. For fuel temperature sensor, IAT sensor and MAF sensor tests, REFER to Section 303-14 Electronic Engine Controls. For evaporative emissions components, REFER to Section 303-13 Evaporative Emissions. Check fuel pressure. For ignition system, REFER to Section 303-07 Engine Ignition. For ECT sensor tests, REFER to Section 303-14 Electronic Engine Controls. For EGR information, REFER to Section 303-08 Engine Emission Control.
Difficult to start after hot soak (vehicle standing after engine has reached operating temperature)	• Injector leak • Fuel temperature sensor • IAT sensor • MAF sensor • Purge valve • Fuel pump • Ignition system • Coolant temperature sensor • EGR valve stuck open	REFER to Fuel Injectors in this section. For fuel temperature sensor, IAT sensor and MAF sensor tests, REFER to Section 303-14 Electronic Engine Controls. For evaporative emissions components, REFER to Section 303-13 Evaporative Emissions. Check fuel pressure. For ignition system, REFER to Section 303-07 Engine Ignition. For ECT sensor tests, REFER to Section 303-14 Electronic Engine Controls. For EGR information, REFER to Section 303-08 Engine Emission Control.
Engine stalls soon after start	• Breather system disconnected/restricted • ECM relay • Harness • MAF sensor • Coolant temperature sensor • Ignition system • Air filter restricted • Fuel lines • Fuel pressure sensor • Air leakage	For breather system, REFER to Section 303-08 Engine Emission Control. For ECM relay, MAF sensor and ECT sensor tests, REFER to Section 303-14 Electronic Engine Controls. For ignition system, REFER to Section 303-07 Engine Ignition. For air filter information, REFER to Section 303-12 Intake Air Distribution and Filtering. For fuel line information, REFER to Section 310-01 Fuel Tank and Lines. For fuel pressure sensor tests, GO to Pinpoint Test B. For intake system information, REFER to Section 303-12 Intake Air Distribution and Filtering.
Engine hesitates/poor acceleration	• Fuel pump • Injector leak • Fuel pressure • Fuel lines • Air leakage • Throttle sensors • Throttle motor • Ignition system • Exhaust gas recirculation • Oxygen sensors • Transmission malfunction • Restricted pedal travel (carpet, etc) • APP sensor	Check fuel pressure. For fuel pressure sensor tests, GO to Pinpoint Test B. For fuel line information, REFER to Section 310-01 Fuel Tank and Lines. For intake system, REFER to Section 303-12 Intake Air Distribution and Filtering. For throttle position sensor and throttle motor tests, REFER to Section 303-14 Electronic Engine Controls. For ignition system, REFER to Section 303-07 Engine Ignition. For exhaust gas recirculation, REFER to Section 303-08 Engine Emission Control. Check for DTCs relating to Oxygen sensors. Refer to the DTC index for pinpoint tests for DTC set. For transmission information, REFER to Section 307-01 Automatic Transmission/Transaxle. Check accelerator pedal travel. For APP sensor tests, REFER to Section 303-14 Electronic Engine Controls.
Engine backfires	• Fuel pump • Fuel lines • Air leakage • MAF sensor • Oxygen sensors • Ignition system • Sticking VCT hub • APP sensor	Check fuel pressure. For fuel line information, REFER to Section 310-01 Fuel Tank and Lines. For intake system, REFER to Section 303-12 Intake Air Distribution and Filtering. For MAF sensor tests, REFER to Section 303-14 Electronic Engine Controls. Check for DTCs relating to Oxygen sensors. Refer to the DTC index for pinpoint tests for DTC set. For ignition system, REFER to Section 303-07 Engine Ignition. For VCT information, REFER to Section 303-01 Engine. For APP sensor tests, REFER to Section 303-14 Electronic Engine Controls.
Engine surges	• Fuel pump • Fuel lines • MAF sensor • Harness • Throttle sensors • Throttle motor • Ignition system	Check fuel pressure. For fuel line information, REFER to Section 412-00 Climate Control System - General Information. For MAF sensor, throttle sensor, and throttle motor relay tests, REFER to Section 303-14 Electronic Engine Controls. For ignition system, REFER to Section 303-07 Engine Ignition.
Engine detonates/knocks	• KS/circuit malfunction • Fuel pump • Fuel lines • Fuel pressure sensor • MAF sensor • Oxygen sensors • Air leakage • Sticking VCT hub • BARO sensor malfunction	For KS circuit tests, REFER to Section 303-14 Electronic Engine Controls. Check fuel pressure. For fuel line information, REFER to Section 310-01 Fuel Tank and Lines. For fuel pressure sensor tests, GO to Pinpoint Test B. For MAF sensor and oxygen sensor tests, REFER to Section 303-14 Electronic Engine Controls. For intake system, REFER to Section 303-12 Intake Air Distribution and Filtering. Check DTCs for VCT range/performance fault. For VCT

Symptom	Possible source	Action
		information, REFER to Section 303-01 Engine. For BARO sensor, contact Dealer technical support for advice on possible ECM failure
No throttle response	• APP sensor malfunction • Throttle sensors • Throttle motor	For APP sensor, throttle position sensor and throttle motor relay tests, REFER to Section 303-14 Electronic Engine Controls.
Poor throttle response	• APP sensor malfunction • Throttle sensors • Coolant temperature sensor • MAF sensor • Transmission malfunction • Traction control event • Air leakage • Breather system disconnected/restricted	For APP sensor, throttle position sensor, ECT sensor and MAF sensor tests, REFER to Section 303-14 Electronic Engine Controls. For transmission information, REFER to Section 307-01 Automatic Transmission/Transaxle. For intake system, REFER to Section 303-12 Intake Air Distribution and Filtering. For breather system information, REFER to Section 303-08 Engine Emission Control.

Driver Information Chart

• NOTE: Use this table to identify DTCs associated with the message centre display, then refer to the DTC index for possible sources and actions.

• NOTE: For definitions of Default Modes, see the foot of this table.

Warning light	Message	Default Mode	DTC
Red	Engine systems fault	Engine shut-down (all cylinders fuel cut)	P1224
Red	Engine systems fault	Limp-Home	P1229
Red	Engine systems fault	Limp-Home	P0121, P0122, P0123, P0222, P0223
Red	Engine systems fault	Limp-Home	P1251, P1631
Red	Engine systems fault	Limp-Home	P1611
Red	Engine systems fault	Limp-Home	P1633
Red	Engine systems fault	High idle	P1344, P1122, P1123, P1215, P1216
Red	Restricted Performance	Limp-Home unavailable	P1254
Amber	Restricted Performance	Limp-Home unavailable	P1250
Red	Restricted Performance	Safety redundancy	P1657, P1658
Red	Restricted Performance	Safety redundancy	P16634
Amber	Cruise not available	MAF (runs normally, limited to 3000 RPM)	P0101, P0102, P0103, P0104
Amber	Cruise not available	None	P1571
Amber	Cruise not available	None	P0568
Amber	Cruise not available	None	P0567
Amber	Cruise not available	None	P0570
Amber	Cruise not available	None	P0569
Amber	Cruise not available	None	P0566
Amber	Cruise not available	None	P1697
Amber	Cruise not available	None	P1696
Amber	Restricted Performance	Engine speed limited	P0116, P0117, P0118, P0125
Amber	Restricted Performance	Engine speed limited	P0101, P0102, P0103, P0104
Amber	Restricted Performance	Engine speed limited	P0300, P0301, p0302, P0303, P0304, P0305, P0306, P0307, P0308, P1313, P1314
Amber	Restricted Performance	Engine speed limited	P0327, P0328, P0332, P0333, P1648
Amber	Restricted Performance	Engine speed limited	P0351, P0352, P0353, P0354, P0355, P0356, P0357, P0358, P1367, P1368
Amber	Restricted Performance	Engine speed limited	P0171, P0172, P0174, P0175
Amber	Restricted Performance	Engine speed limited	
Amber	Restricted Performance	Engine speed limited	P0201, P0202, P0203, P0204, P0205, P0206, P0207, P0208
Amber	Restricted Performance	Engine speed limited	P0335, P0336
Amber	Restricted Performance	Engine speed limited, Reverse throttle progression enabled	P1642
Amber	Restricted Performance	Engine speed limited, Reverse throttle progression enabled	P1643
Amber	Restricted Performance	Engine speed limited, Reverse throttle progression enabled	P0096, P0097, P0098
Amber	Restricted Performance	Engine speed limited, Reverse throttle progression enabled	P1474
Amber	Restricted Performance	Engine speed limited	P1234, P1236, P1338
Amber	None	None	P0506, P0507
Amber	None	None	P1656
Amber	Gearbox fault/Restricted performance	Gearbox default to set gear	P0725
Amber	Gearbox fault/Restricted performance	Gearbox default to set gear	P1796
Amber	Gearbox fault/Restricted performance	Gearbox default to set gear	P0701
Amber	Gearbox fault/Restricted performance	Gearbox default to set gear	P1603
Amber	Gearbox fault/Restricted performance	Gearbox default to set gear	P0605
Amber	Gearbox fault/Restricted performance	Gearbox default to set gear	P1719
Amber	Gearbox fault/Restricted performance	Gearbox default to set gear	P0720

Warning light	Message	Default Mode	DTC
Amber	Gearbox fault/Restricted performance	Gearbox default to set gear	P0715
Amber	Gearbox fault/Restricted performance	Gearbox default to set gear	P0705
Amber	Gearbox fault/Restricted performance	Gearbox default to set gear	P0610
Amber	Gearbox fault/Restricted performance	Gearbox default to set gear	P0606
Amber	Gearbox fault/Restricted performance	Gearbox default to set gear	P0750
Amber	Gearbox fault/Restricted performance	Gearbox default to set gear	P0753
Amber	Gearbox fault/Restricted performance	Gearbox default to set gear	P0755
Amber	Gearbox fault/Restricted performance	Gearbox default to set gear	P0758
Amber	Gearbox fault/Restricted performance	Gearbox default to set gear	P0760
Amber	Gearbox fault/Restricted performance	Gearbox default to set gear	P0763
Amber	Gearbox fault/Restricted performance	Gearbox default to set gear	P0765
Amber	Gearbox fault/Restricted performance	Gearbox default to set gear	P0768
Amber	Gearbox fault/Restricted performance	Gearbox default to set gear	P0770
Amber	Gearbox fault/Restricted performance	Gearbox default to set gear	P0773
Amber	Gearbox fault/Restricted performance	Gearbox default to set gear	P0740
Amber	Gearbox fault/Restricted performance	Gearbox default to set gear	P0743
Amber	Gearbox fault/Restricted performance	Gearbox default to set gear	P0787
Amber	Gearbox fault/Restricted performance	Gearbox default to set gear	P0788
Amber	Gearbox fault/Restricted performance	Gearbox default to set gear	P0730
Amber	Gearbox fault/Restricted performance	Gearbox default to set gear	P0731
Amber	Gearbox fault/Restricted performance	Gearbox default to set gear	P0732
Amber	Gearbox fault/Restricted performance	Gearbox default to set gear	P0733
Amber	Gearbox fault/Restricted performance	Gearbox default to set gear	P0734
Amber	Gearbox fault/Restricted performance	Gearbox default to set gear	P0735
Amber	Gearbox fault/Restricted performance	Gearbox default to set gear	P0729
Amber	Gearbox fault/Restricted performance	Gearbox default to set gear	P0781
Amber	Gearbox fault/Restricted performance	Gearbox default to set gear	P0782
Amber	Gearbox fault/Restricted performance	Gearbox default to set gear	P0783
Amber	Gearbox fault/Restricted performance	Gearbox default to set gear	P0784
Amber	Gearbox fault/Restricted performance	Gearbox default to set gear	P0829
Amber	Gearbox fault/Restricted performance	Engine speed limited, reverse throttle progression enabled	P1797
Amber	Gearbox fault/Restricted performance	Gearbox default to set gear	P0641
Amber	Gearbox fault/Restricted performance	Gearbox default to set gear	P0651
Amber	Gearbox fault/Restricted performance	Gearbox default to set gear	P0860
Amber	Gearbox fault/Restricted performance	Limp-home	P1783

Default mode Definitions

LIMP-HOME MODE

- Throttle motor off
- Throttle motor relay off
- Throttle motor circuit off
- Fuel intervention
- Cruise control inhibited

LIMP-HOME UNAVAILABLE

- Power limitation
- Vehicle speed limited to 120 kph
- Reverse throttle progression enabled
- Cruise Control Inhibited

REVERSE THROTTLE PROGRESSION

- Throttle opening limited to maximum 30%

• NOTE: The throttle operation uses the same map as for reverse gear.

ENGINE SPEED LIMITED

- Engine runs normally, up to 3000 RPM
- Engine speed restricted to 3000 RPM maximum, by fuel cut-off

HIGH IDLE

- Throttle valve kept in fixed position by motor
- Cruise Control Inhibited

SAFETY REDUNDANCY

- Power limitation
- Vehicle speed limited to 120 kph
- Reverse throttle progression enabled
- Cruise Control Inhibited

Diagnostic Trouble Code (DTC) index

DTC	Condition	Possible Causes	Action
P0171	Right-Hand cylinders combustion too lean	• Air intake leak between Mass air flow (MAF) sensor and cylinder head • Fuel filter / system restriction • Fuel injector restriction • Fuel pressure sensor fault (low fuel pressure) • Low fuel pump output • HO2S/catalyst monitor sensor harness wiring condition fault • EFT sensor fault (low fuel temperature) • Mass air flow (MAF) sensor fault (low intake air flow) • Exhaust leak (before catalyst) • ECM receiving incorrect signal from one or more of the following sensors; ECT, MAF*, IAT, fuel rail temperature	For intake system, REFER to Section 303-12 Intake Air Distribution and Filtering. For fuel injector REFER to Fuel Injectors in this section. For fuel filter and pump, REFER to Section 310-01 Fuel Tank and Lines. For fuel pressure sensor, GO to Pinpoint Test B. For HO2S/Catalyst monitor sensor tests, REFER to Section 303-14 Electronic Engine Controls. For exhaust system, REFER to Section 309-00 Exhaust System. For sensor tests, REFER to Section 303-14 Electronic Engine Controls. * If this DTC is flagged, pay particular attention to the MAF sensor.
P0172	Right-Hand cylinders combustion too rich	• Engine misfire • Restricted air filter • Leaking fuel injector(s) • Fuel pressure sensor failure (high fuel pressure) • EFT sensor fault (high fuel temperature) • MAF sensor fault (high intake air flow) • HO2S/catalyst monitor sensor harness wiring condition fault • ECM receiving incorrect signal from one or more of the following sensors; ECT, MAF, IAT, IP, EFT.	Check for "misfire detected" DTCs in this section; For intake system, REFER to Section 303-12 Intake Air Distribution and Filtering. For fuel injector, REFER to Fuel Injectors in this section. For fuel pressure sensor, GO to Pinpoint Test B. For other sensor tests, REFER to Section 303-14 Electronic Engine Controls.
P0174	Left-Hand cylinders combustion too lean	• Air intake leak between MAF sensor and cylinder head • Fuel filter / system restriction • Fuel injector restriction • Fuel pressure (IP) sensor failure (low fuel pressure) • Low fuel pump output • HO2S/catalyst monitor sensor harness wiring condition fault • EFT sensor fault (low fuel temperature) • Mass air flow (MAF) sensor fault (low intake air flow) • Exhaust leak (before catalyst) • ECM receiving incorrect signal from one or more of the following sensors; ECT, MAF*, IAT, IP, EFT, TP.	For intake system, REFER to Section 303-12 Intake Air Distribution and Filtering. For fuel injectors, REFER to Fuel Injectors in this section. For fuel filter, pump and lines, REFER to Section 310-01 Fuel Tank and Lines. For fuel pressure regulator, REFER to Fuel Pressure Regulator in this section. For HO2S/catalyst monitor sensor tests, REFER to Section 303-14 Electronic Engine Controls. For exhaust system, REFER to Section 309-00 Exhaust System. For fuel pressure sensor tests, GO to Pinpoint Test B. For other sensor tests, REFER to Section 303-14 Electronic Engine Controls. * If this DTC is flagged, pay particular attention to the MAF sensor.
P0175	Left-Hand cylinders combustion too rich	• Engine misfire • Restricted air filter • Leaking fuel injector(s) • Fuel pressure sensor failure (high fuel pressure) • ECM receiving incorrect signal from one or more of the following sensors; ECT, MAF, IAT, fuel rail pressure, fuel rail temperature	Check for "misfire detected" DTCs in this section. For intake system, REFER to Section 303-12 Intake Air Distribution and Filtering. For fuel injectors, REFER to Fuel Injectors in this section. For fuel pressure sensor tests, GO to Pinpoint Test B. For other sensor tests, REFER to Section 303-14 Electronic Engine Controls.

DTC	Condition	Possible Causes	Action
P0191	Fuel rail pressure (IP) sensor circuit range/performance	• Fuel filter/system restriction • Fuel system leak • Incorrect fuel pump output • IP sensor to ECM sensing circuit; high resistance, open circuit, short circuit to high voltage • IP sensor to splice in sensor supply circuit; high resistance, open circuit • IP sensor to splice in sensor ground circuit; high resistance, open circuit, short circuit to ground, short circuit to high voltage • IP sensor failure	For fuel filter, pump and lines, REFER to Section 310-01 Fuel Tank and Lines. IP sensor tests, GO to Pinpoint Test B.
P0192	Fuel rail pressure (IP) sensor circuit low voltage (low pressure)	• IP sensor disconnected • IP sensor to ECM sensing circuit; open circuit or short circuit to ground • IP sensor to splice in sensor supply circuit; high resistance, open circuit • IP sensor failure	For IP sensor tests, GO to Pinpoint Test B.
P0193	Fuel rail pressure (IP) sensor circuit high voltage (high pressure)	• IP sensor to ECM wiring (supply/sense); short circuit to each other • IP sensor to ECM sense circuit; short circuit to high voltage • IP sensor to splice in sensor ground circuit; open circuit • IP sensor failure	For IP sensor tests, GO to Pinpoint Test B.
P0201	Fuel injector circuit malfunction, Cyl 1	• Injector disconnected • Injector wiring open or short circuit • Injector failure	For fuel injectors, REFER to Fuel Injectors in this section. For fuel injector wiring tests, GO to Pinpoint Test A.
P0202	Fuel injector circuit malfunction, Cyl 3		
P0203	Fuel injector circuit malfunction, Cyl 5		
P0204	Fuel injector circuit malfunction, Cyl 7		
P0205	Fuel injector circuit malfunction, Cyl 2		
P0206	Fuel injector circuit malfunction, Cyl 4		
P0207	Fuel injector circuit malfunction, Cyl 6		
P0208	Fuel injector circuit malfunction, Cyl 8		
P0300	Random misfire detected	• ECM to ignition coil primary circuit fault. (cylinder misfire detected DTC also flagged) • Ignition coil failure • Spark plug failure/fouled/incorrect gap • Fuel injector circuit fault(s) (injector DTCs also flagged) • Fuel delivery pressure high/low • Fuel injectors restricted/leaking • Fuel injectors continuously open • Fuel contamination • Worn camshaft/broken valve springs	For ignition system, REFER to Section 303-07 Engine Ignition. For injector circuit tests, GO to Pinpoint Test A. For fuel pressure, check fuel pressure, REFER to Section 310-00 Fuel System - General Information. REFER to Fuel Pressure Regulator in this section. For fuel injectors, REFER to Fuel Injectors in this section. For engine information, REFER to Section 303-01 Engine.
P0301	Misfire detected, cylinder 1		
P0302	Misfire detected, cylinder 2		
P0303	Misfire detected, cylinder 3		
P0304	Misfire detected, cylinder 4		
P0305	Misfire detected, cylinder 5		
P0306	Misfire detected, cylinder 6		
P0307	Misfire detected, cylinder 7		
P0308	Misfire detected, cylinder 8		
P0460	Fuel level sensor circuit range/performance	• Fuel level sensor to rear electronic control module circuit(s); intermittent short circuit, open circuit, high resistance • Fuel level sensor failure • Rear electronic control module fault (incorrect fuel level data)	For fuel level sensor and circuit tests, GO to Pinpoint Test C.
P1224	Throttle control position error	• Throttle motor failure • Throttle body failure	This DTC can only be accurately diagnosed using the Jaguar Approved Diagnostic System. If this is not available, INSTALL a new throttle body. REFER to Throttle Body in this section. CLEAR the DTC, TEST the system for normal operation.
P1229	Throttle motor control circuit malfunction	• Throttle motor disconnected • Throttle motor to ECM drive circuits; short circuit or open circuit • ECM ground circuit fault(s) (EM80-04, 05, 54) • Throttle motor failure • Throttle body failure	For throttle motor and circuit tests, and for ECM ground tests, REFER to Section 303-14 Electronic Engine Controls. For throttle body, REFER to Throttle Body in this section.
P1234	No fuel pump commands received by ECM	• ECM to fuel pump module drive circuit; open circuit, short circuit, high resistance • Fuel pump module failure	For fuel pump module circuit tests, GO to Pinpoint Test D.
P1236	Fuel pump not activated when requested by ECM	• ECM to fuel pump module drive circuit; open circuit, short circuit, high resistance • Fuel pump module failure	For fuel pump module circuit tests, GO to Pinpoint Test D.
P1250	Throttle return spring failure malfunction	Throttle return spring failure (throttle body failure)	This DTC can only be accurately diagnosed using the Jaguar Approved Diagnostic System. If this is not available, INSTALL a new throttle body. REFER to Throttle Body in this section. CLEAR the DTC, TEST the system for

DTC	Condition	Possible Causes	Action
			normal operation.
P1251	Throttle motor relay OFF failure	• Throttle motor relay coil power supply circuit; open circuit • Throttle motor relay failure • Throttle motor relay coil to ECM circuit; open circuit • ECM ground circuit fault (relay coil drive)	For throttle motor relay tests, GO to Pinpoint Test E.
P1254	Throttle limp-home spring malfunction	Throttle body	This DTC can only be accurately diagnosed using the Jaguar Approved Diagnostic System. If this is not available, INSTALL a new throttle body. REFER to Throttle Body in this section. CLEAR the DTC, TEST the system for normal operation.
P1313	Right-Hand cylinders misfire rate catalyst damage (this DTC will flag only when accompanied by an individual cylinder misfire DTC; P0300-P0308)	Refer to P0300 possible sources	Refer to P0300 Actions
P1314	Left-Hand cylinders misfire rate catalyst damage (this DTC will flag only when accompanied by an individual cylinder misfire DTC; P0300-P0308)		
P1316	Misfire excess emission (Note; This DTC will flag only when accompanied by an individual cylinder misfire DTC; P0300 to P0308)		
P1338	Fuel pump drive circuit low/high voltage	• Fuel pump module to fuel pump drive circuit; open circuit, short circuit, high resistance • Fuel pump module failure • Fuel pump failure	For fuel pump module and pump circuit tests, GO to Pinpoint Test D.
P1631	Throttle motor power relay coil activation circuit failure	• Throttle motor relay coil to ECM circuit; open circuit • Throttle motor relay failure • Throttle motor relay coil to ECM drive circuit; open circuit, short circuit to ground	For throttle motor relay tests, GO to Pinpoint Test E.
P1634	Throttle watchdog circuit malfunction	• ECM failure	Contact dealer technical support for advice on possible ECM failure.
P1656	Throttle position (TP) sensor amplifier circuit malfunction	• ECM failure	Contact dealer technical support for advice on possible ECM failure.
P1657	Throttle motor relay coil drive circuit ON failure	• Throttle motor relay failure • Throttle motor relay coil to ECM drive circuit; short circuit to B+ voltage	For throttle motor relay tests, GO to Pinpoint Test E.
P1658	Throttle motor relay ON failure		

Pinpoint Tests

PINPOINT TEST A : DTC P0201, P0202, P0203, P0204, P0205, P0206, P0207, P0208; FUEL INJECTORS	
• NOTE: The DTC set will indicate which cylinder injector or circuit is faulty. Only in the event of multiple cylinder misfires will it be necessary to check more than one injector or circuit, in which case, multiple DTCs will be set.	
TEST CONDITIONS	**DETAILS/RESULTS/ACTIONS**
A1: CHECK THE INJECTOR COIL RESISTANCE	
	1 Turn the ignition switch to the OFF position.
	2 Disconnect the battery negative terminal.
	3 Disconnect the relevant injector electrical connector. (PI07 to PI14).
	4 Measure the resistance between the injector pins.
	Is the resistance between 12 and 16 ohms? **Yes** GO to A2. **No** INSTALL a new injector. REFER to Fuel Injectors in this section. CLEAR the DTC. TEST the system for normal operation.
A2: CHECK THE INJECTOR COIL INSULATION	
	1 Measure the resistance between the injector pin 01 and the injector body.
	2 Measure the resistance between the injector pin 02 and the injector body.
	Is either resistance less than 10,000 ohms? **Yes** INSTALL a new injector. REFER to Fuel Injectors in this section. CLEAR the DTC. TEST the system for normal operation. **No** GO to A3.
A3: CHECK THE INJECTOR SUPPLY VOLTAGE	
	1 Turn the ignition switch to the ON position.
	2 Reconnect the battery negative terminal.
	3 Disconnect the relevant injector harness electrical connector, (PI07 to PI14).
	4 Measure the voltage between the relevant injector harness electrical connector, (PI07 to PI14) pin 02 and GROUND.
	Is the voltage less than 10 Volts? **Yes** REPAIR the circuit between the relevant injector harness electrical connector, (PI07 to PI14) pin 02 and battery. This circuit includes the EMS fuse box, fuse 18. For additional information, refer to the wiring diagrams. CLEAR the DTC.

	TEST the system for normal operation. **No** GO to A4.
A4: CHECK THE INJECTOR GROUND CIRCUIT	
	1 Turn the ignition switch to the OFF position.
	2 Disconnect the battery negative terminal.
	3 Disconnect the ECM electrical connector, EM80.
	4 Measure the resistance between the relevant injector harness electrical connector, (PI07 to PI14) pin 01 and EM80, pins as follows - • Injector Cyl 1 pin 01 (BG) and ECM pin 120. • Injector Cyl 2 pin 01 (BG) and ECM pin 115. • Injector Cyl 3 pin 01 (BO) and ECM pin 114. • Injector Cyl 4 pin 01 (BO) and ECM pin 119. • Injector Cyl 5 pin 01 (BG) and ECM pin 113. • Injector Cyl 6 pin 01 (BG) and ECM pin 118. • Injector Cyl 7 pin 01 (BW) and ECM pin 117. • Injector Cyl 8 pin 01 (BW) and ECM pin 112.
	Is the resistance greater than 5 ohms? **Yes** REPAIR the high resistance circuit. For additional information, refer to the wiring diagrams. CLEAR the DTC. TEST the system for normal operation. **No** GO to A5.
A5: CHECK THE INJECTOR GROUND CIRCUIT FOR SHORT CIRCUIT TO BATTERY	
	1 Reconnect the battery negative terminal.
	2 Turn the ignition switch to the ON position.
	3 Measure the voltage between the relevant injector harness electrical connector, (PI07 to PI14) pin 01 and GROUND.
	Is the voltage greater than 3 volts? **Yes** REPAIR the short circuit. For additional information, refer to the wiring diagrams. CLEAR the DTC. TEST the system for normal operation. **No** GO to A6.
A6: CHECK THE INJECTOR GROUND CIRCUIT FOR SHORT CIRCUIT TO GROUND	
	1 Measure the resistance between the relevant injector harness electrical connector, (PI07 to PI14) pin 01 and GROUND.
	Is the resistance less than 10,000 ohms? **Yes** REPAIR the short circuit. For additional information, refer to the wiring diagrams. CLEAR the DTC. TEST the system for normal operation. **No** Contact Dealer technical support for advice on possible ECM failure.

PINPOINT TEST B : DTC P0190, P0192, P0193; FUEL PRESSURE (IP) SENSOR

• NOTE: For sensor supply tests,
REFER to Section 303-14 Electronic Engine Controls.

• NOTE: For sensor ground tests,
REFER to Section 303-14 Electronic Engine Controls.

TEST CONDITIONS	DETAILS/RESULTS/ACTIONS
B1: CHECK THE IP SENSOR SIGNAL CIRCUIT FOR HIGH RESISTANCE	
	1 Turn the ignition switch to the OFF position.
	2 Disconnect the battery negative terminal.
	3 Disconnect the IP sensor electrical connector, PI43.
	4 Measure the resistance between PI43, pin 03 (U) and EM80, pin 73 (U).
	Is the resistance greater than 5 ohms? **Yes** REPAIR the high resistance circuit. For additional information, refer to the wiring diagrams. CLEAR the DTC. TEST the system for normal operation. **No** GO to B2.
B2: CHECK THE IP SENSOR SIGNAL CIRCUIT FOR SHORT TO HIGH VOLTAGE	
	1 Reconnect the battery negative terminal.
	2 Turn the ignition switch to the ON position.
	3 Measure the voltage between PI43, pin 03 (U) and GROUND.
	Is the voltage greater than 3 volts? **Yes** REPAIR the short circuit. For additional information, refer to the wiring diagrams. CLEAR the DTC. TEST the system for normal operation. **No** GO to B3.
B3: CHECK THE IP SENSOR SIGNAL CIRCUIT FOR SHORT TO GROUND	
	1 Disconnect the ECM electrical connector, PI01.
	2 Measure the resistance between the IP sensor electrical connector PI28, pin 03, (U) and PI01, pin 73.
	Is the resistance greater than 5 ohms? **Yes** REPAIR the high resistance circuit. For additional information, refer to the wiring diagrams. CLEAR the DTC. TEST the system for normal operation. **No** Recheck the DTCs. Check the sensor supply and ground circuits. REFER to Section 303-14 Electronic Engine Controls.

PINPOINT TEST C : DTC P0460; FUEL LEVEL SENSORS

TEST CONDITIONS	DETAILS/RESULTS/ACTIONS
C1: CHECK THE SUPPLY VOLTAGE TO THE FUEL LEVEL SENSOR	

	1 Disconnect the fuel level sensor electrical connector, FT03.
	2 Turn the ignition switch to the ON position.
	3 Measure the voltage between electrical connector FT03, pin 03 (RW) and GROUND.
	Is the voltage less than 5 volts? **Yes** GO to C2. **No** GO to C3.
C2: CHECK THE FUEL LEVEL SENSOR SUPPLY CIRCUIT FOR HIGH RESISTANCE	
	1 Disconnect the major instrument cluster electrical connector, FC26.
	2 Measure the resistance between FT03, pin 03 (RW) and FC26, pin 14 (RW).
	Is the resistance greater than 5 ohms? **Yes** REPAIR the high resistance circuit. For additional information, refer to the wiring diagrams. CLEAR the DTC. CHECK the system for normal operation. **No** GO to C3.
C3: CHECK THE FUEL LEVEL SENSOR SIGNAL CIRCUIT	
	1 Disconnect the major instrument cluster electrical connector, FC26.
	2 Measure the resistance between FT03, pin 04 (BW) and FC26, pin 13 (BW).
	Is the resistance greater than 5 ohms? **Yes** REPAIR the high resistance circuit. For additional information, refer to the wiring diagrams. CLEAR the DTC. CHECK the system for normal operation. **No** GO to C4.
C4: CHECK THE FUEL LEVEL SENSOR RHEOSTAT (EMPTY)	
	1 Empty the fuel tank.
	2 Measure the resistance between pins 03 and 04 of the fuel level sensor.
	Is the resistance 900 ohms? **Yes** GO to C5. **No** INSTALL a new fuel level sensor. REFER to Section 310-01 Fuel Tank and Lines. CLEAR the DTC. TEST the system for normal operation.
C5: CHECK THE FUEL LEVEL SENSOR RHEOSTAT. (FULL)	
	1 Fill the fuel tank.
	2 Measure the resistance between pins 03 and 04 of the fuel level sensor.
	Is the resistance 80 ohms? **Yes** INSTALL a new major instrument cluster. REFER to Section 413-01 Instrument Cluster. **No** INSTALL a new fuel level sensor. REFER to Section 310-01 Fuel Tank and Lines. CLEAR the DTC. TEST the system for normal operation.

PINPOINT TEST D : DTC P1236; FUEL PUMP NOT ACTIVATED WHEN REQUESTED BY ECM	
TEST CONDITIONS	**DETAILS/RESULTS/ACTIONS**
D1: CHECK THE FUEL PUMP MODULE + OUTPUT TO THE FUEL PUMP	
	1 Disconnect the fuel pump electrical connector, FK04.
	2 Turn the ignition switch to the CRANK position.
	3 Measure the voltage between FK04, pin 02 (W).
	Is the voltage less than 10 volts? **Yes** GO to D3. **No** GO to D2.
D2: CHECK THE FUEL PUMP MODULE - OUTPUT TO THE FUEL PUMP	
• NOTE: This test would be necessary if there were an EMC (electro-magnetic compatibility) issue with the vehicle.	
	1 Turn the ignition switch to the CRANK position.
	2 Measure the resistance between FK04, pin 01 (B) and GROUND.
	Is the resistance greater than 5 ohms? **Yes** GO to D3. **No** INSTALL a new fuel pump. REFER to Section 310-01 Fuel Tank and Lines. CLEAR the DTC. TEST the system for normal operation.
D3: CHECK THE POWER SUPPLY TO THE FUEL PUMP MODULE	
	1 Disconnect the fuel pump module electrical connector, BT18.
	2 Turn the ignition switch to the ON position.
	3 Measure the voltage between BT18, pin 05 (NW) and GROUND.
	Is the voltage greater than 10 volts? **Yes** GO to D4. **No** REPAIR the supply circuit to the fuel pump module. This circuit includes the rear power distribution box, fuse 05, the ignition positive relay, and the high power protection module. For additional information, refer to the wiring diagrams. CLEAR the DTC. TEST the system for normal operation.
D4: CHECK THE GROUND CIRCUIT TO THE FUEL PUMP MODULE	
	1 Measure the resistance between BT18, pin 02 (B) and GROUND.

	Is the resistance greater than 5 ohms? **Yes** REPAIR the high resistance circuit. For additional information, refer to the wiring diagrams. CLEAR the DTC. TEST the system for normal operation. **No** GO to D5.
D5: CHECK THE ECM PWM INPUT CIRCUIT FOR HIGH RESISTANCE	
	1 Disconnect the battery negative terminal.
	2 Disconnect the ECM electrical connector EM80.
	3 Measure the resistance between BT18, pin 03 (W) and EM80, pin 27 (W).
	Is the resistance greater than 5 ohms? **Yes** REPAIR the high resistance circuit. For additional information, refer to the wiring diagrams. CLEAR the DTC. TEST the system for normal operation. **No** GO to D6.
D6: CHECK THE FUEL PUMP MODULE DIAGNOSTIC OUTPUT CIRCUIT FOR HIGH RESISTANCE	
	1 Measure the resistance between BT18, pin 04 (W) and EM80, pin 25.
	Is the resistance greater than 5 ohms? **Yes** REPAIR the high resistance circuit. For additional information, refer to the wiring diagrams. CLEAR the DTC. TEST the system for normal operation. **No** INSTALL a new fuel pump module. REFER to Section 310-01 Fuel Tank and Lines. CLEAR the DTC. TEST the system for normal operation. If the DTC is repeated, contact Dealer technical support for advice on possible ECM failure.

PINPOINT TEST E : DTC P1251, P1631, P1657, P1658; CHECK THROTTLE MOTOR RELAY	
TEST CONDITIONS	**DETAILS/RESULTS/ACTIONS**
E1: CHECK THE THROTTLE MOTOR RELAY CONSTANT SUPPLY	
	1 Remove the throttle motor relay.
	2 Measure the voltage between the throttle motor relay base, pin 03 and GROUND.
	Is the voltage less than 10 volts? **Yes** REPAIR the circuit between the throttle motor relay base, pin 03 and the battery. This circuit includes the EMS fuse box, fuse 09, and the high power protection module. For additional information, refer to the wiring diagrams. CLEAR the DTC. TEST the system for normal operation. **No** GO to E2.
E2: CHECK THROTTLE MOTOR RELAY EMS SWITCHED SUPPLY	
	1 Turn the ignition switch to the ON position.
	2 Measure the voltage between the throttle motor relay base, pin 01 and GROUND.
	Is the voltage less than 10 volts? **Yes** REPAIR the circuit between the throttle motor relay base, pin 01 and the battery. This circuit includes the EMS fuse box, fuse 14, the EMS control relay, and the high power protection module. For additional information, refer to the wiring diagrams. CLEAR the DTC. TEST the system for normal operation. **No** GO to E3.
E3: CHECK THROTTLE MOTOR RELAY TO ECM CIRCUIT FOR HIGH RESISTANCE	
	1 Disconnect the ECM electrical connector, EM80.
	2 Measure the resistance between EM80, pin 52 (GR) and throttle motor relay base, pin 02.
	Is the resistance greater than 5 ohms? **Yes** REPAIR the high resistance circuit. For additional information, refer to the wiring digrams. CLEAR the DTC. TEST the system for normal operation. **No** GO to E4.
E4: CHECK THROTTLE MOTOR RELAY TO ECM CIRCUIT FOR SHORT TO GROUND	
	1 Measure the resistance between throttle motor relay base, pin 02 and GROUND.
	Is the resistance less than 10,000 ohms? **Yes** REPAIR the short circuit. For additional information, refer to the wiring diagrams. CLEAR the DTC. TEST the system for normal operation. **No** GO to E5.
E5: CHECK THROTTLE MOTOR RELAY OUTPUT CIRCUIT TO ECM FOR HIGH RESISTANCE	
	1 Measure the resistance between EM80, pin 134 (GW) and throttle motor relay base, pin 05.
	Is the resistance greater than 5 ohms? **Yes** REPAIR the high resistance circuit. For additional information, refer to the wiring digrams. CLEAR the DTC. TEST the system for normal operation. **No** GO to E6.
E6: CHECK THROTTLE MOTOR RELAY OUTPUT CIRCUIT TO ECM FOR SHORT TO GROUND	
	1 Measure the resistance between the throttle motor relay base, pin 05 and GROUND.
	Is the resistance less than 10,000 ohms? **Yes** REPAIR the short circuit. For additional information, refer to the wiring diagrams. CLEAR the DTC. TEST the system for normal operation. **No** INSTALL a new relay. If the DTC is repeated, contact Dealer technical support for advice on possible ECM failure.

Fuel Charging and Controls - Fuel Injection Supply Manifold

Removal and Installation

Removal

• WARNINGS:

Place the vehicle in a quarantined area and arrange "No Smoking/Petrol Fumes" signs about the vehicle.

Before any work is carried out on the fuel system, ground the vehicle to earth and maintain the ground connection until the work is complete.

Do not smoke or carry lighted tobacco or open flame of any type when working on or near any fuel related components. Highly flammable vapors are always present and may ignite. Failure to follow these instructions may result in personal injury.

The fuel system remains pressurized for a long time after the ignition is switched off. The fuel pressure must be relieved before attempting any repairs. Failure to follow these instructions may result in personal injury.

After carrying out repairs, the fuel system must be checked visually for leaks. Failure to follow these instructions may result in personal injury.

This procedure involves fuel handling. Be prepared for fuel spillage at all times and always observe fuel handling precautions. Failure to follow these instructions may result in personal injury.

If taken internally do not induce vomiting, seek immediate medical attention. Failure to follow these instructions may result in personal injury.

If fuel contacts the eyes, flush the eyes with cold water or eyewash solution and seek medical attention.

Wash hands thoroughly after handling, as prolonged contact may cause irritation. Should irritation develop, seek medical attention.

Do not carry or operate cellular phones when working on or near any fuel related components. Highly flammable vapours are always present and may ignite. Failure to follow these instructions may result in personal injury.

All vehicles

1. Release the fuel system pressure.
   For additional information, refer to Section 310-00 Fuel System - General Information.
2. Disconnect the fuel injection supply manifold fuel line.
   For additional information, refer to Section 310-00 Fuel System - General Information.

Vehicles with supercharger

3. Remove the charge air coolers.
   For additional information, refer to Section 303-12 Intake Air Distribution and Filtering.

Vehicles without supercharger

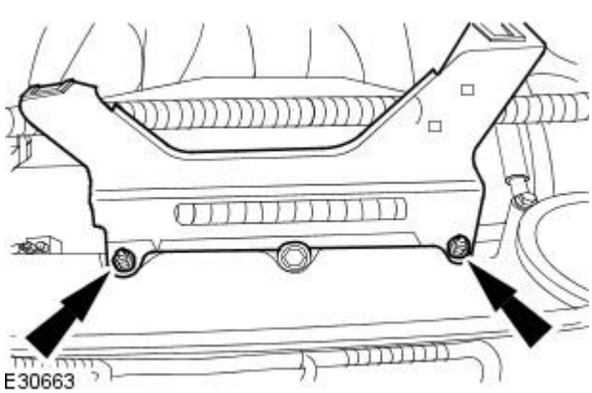

4. NOTE: Right-hand shown, left-hand similar.

   Remove the engine cover retaining brackets.

   - Detach the knock sensor (KS) wiring harnesses.

All vehicles

• NOTE: Vehicles without supercharger shown, vehicles with supercharger similar.

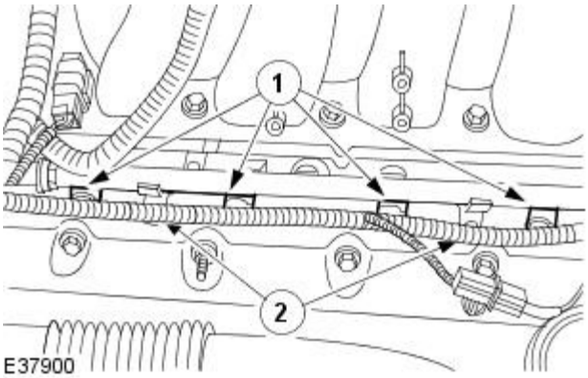

5. NOTE: Right-hand shown, left-hand similar.

Detach the fuel charging wiring harness.

1. Disconnect the fuel injector electrical connectors.
2. Detach the fuel charging wiring harness.

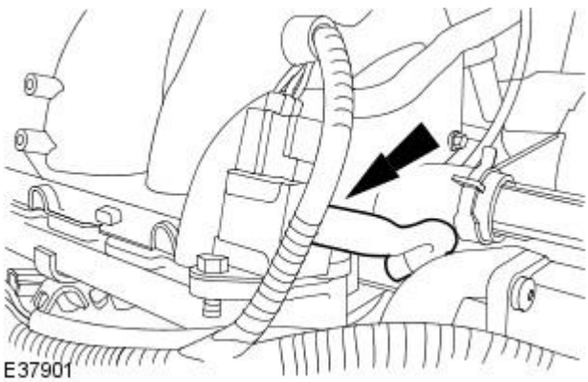

6. Disconnect the fuel pressure regulator vacuum hose.

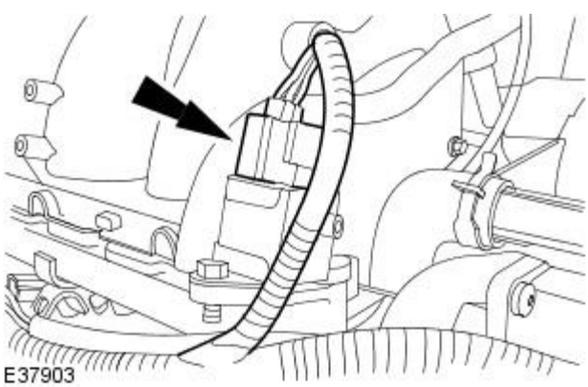

7. Disconnect the fuel pressure regulator electrical connector.

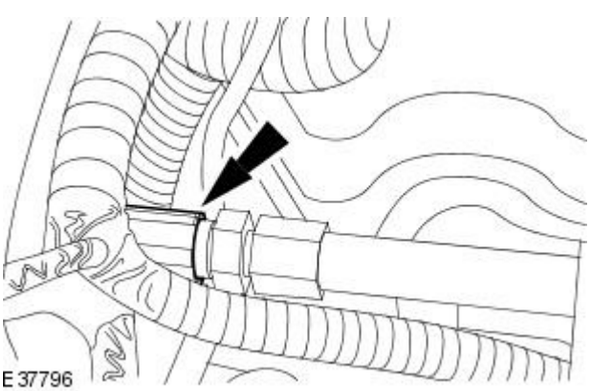

8. Disconnect the fuel temperature sensor electrical connector.

Vehicles without supercharger

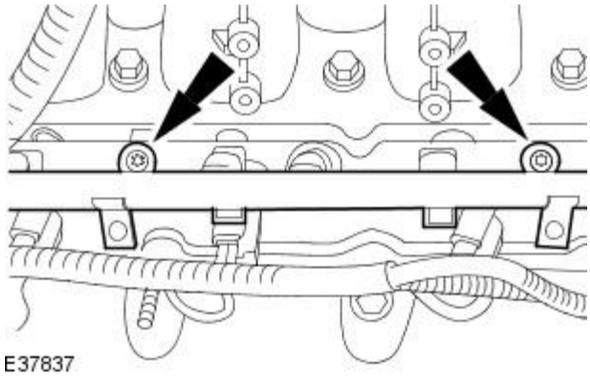

9. NOTE: Right-hand shown, left-hand similar.

Remove the fuel injection supply manifold retaining bolts.

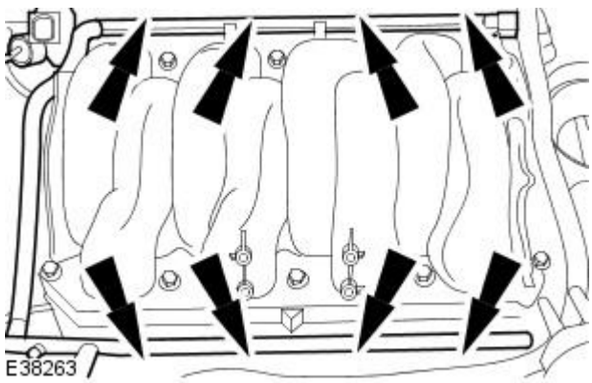

10. Remove the fuel injection supply manifold.

11. Remove and discard the fuel injector O-ring seals.

Vehicles with supercharger

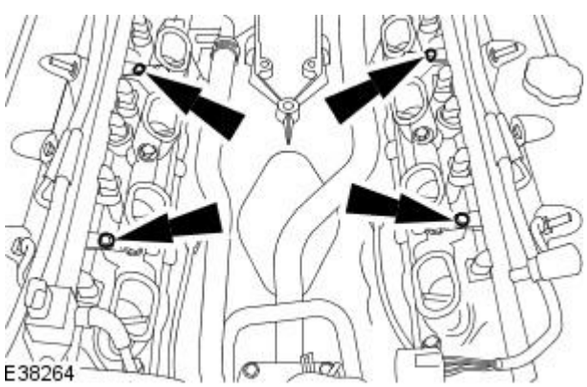

12. Remove the fuel injection supply manifold retaining bolts.

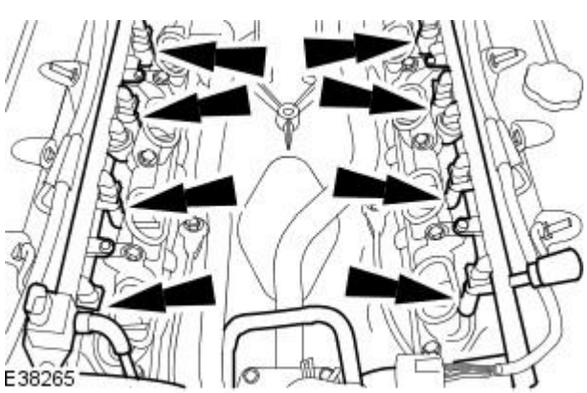

13. Remove the fuel injection supply manifold.

14. Remove and discard the fuel injector O-ring seals.

Installation

All vehicles

1. NOTE: Install new fuel injector O-ring seals.

• NOTE: Lubricate the fuel injector O-ring seals with clean engine oil to aid installation.

To install, reverse the removal procedure.

Vehicles without supercharger

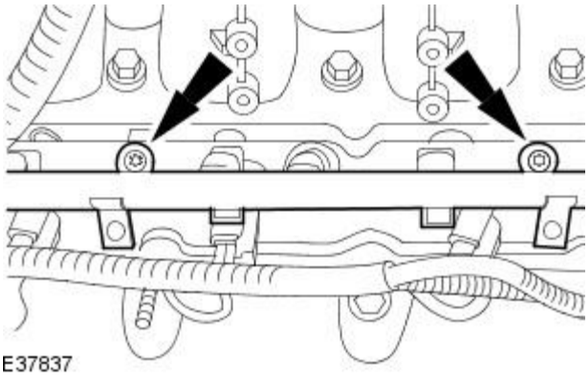

2. NOTE: Right-hand shown, left-hand similar.

Tighten to 9 Nm.

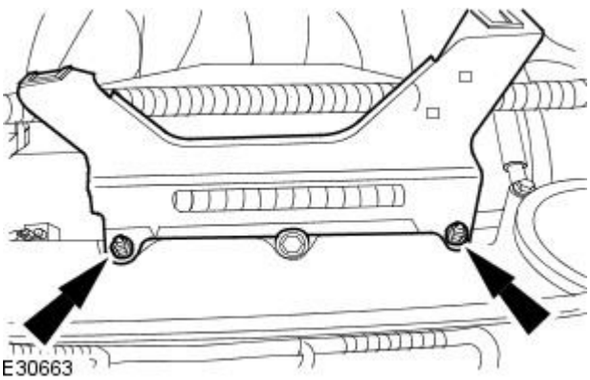

3. Tighten to 6 Nm.

Vehicles with supercharger

4. Tighten to 9 Nm.

Fuel Charging and Controls - Fuel Injector

Removal and Installation

Removal

• WARNINGS:

Place the vehicle in a quarantined area and arrange "No Smoking/Petrol Fumes" signs about the vehicle.

Before any work is carried out on the fuel system, ground the vehicle to earth and maintain the ground connection until the work is complete.

Do not smoke or carry lighted tobacco or open flame of any type when working on or near any fuel related components. Highly flammable vapors are always present and may ignite. Failure to follow these instructions may result in personal injury.

The fuel system remains pressurized for a long time after the ignition is switched off. The fuel pressure must be relieved before attempting any repairs. Failure to follow these instructions may result in personal injury.

After carrying out repairs, the fuel system must be checked visually for leaks. Failure to follow these instructions may result in personal injury.

This procedure involves fuel handling. Be prepared for fuel spillage at all times and always observe fuel handling precautions. Failure to follow these instructions may result in personal injury.

If taken internally do not induce vomiting, seek immediate medical attention. Failure to follow these instructions may result in personal injury.

If fuel contacts the eyes, flush the eyes with cold water or eyewash solution and seek medical attention.

Wash hands thoroughly after handling, as prolonged contact may cause irritation. Should irritation develop, seek medical attention.

Do not carry or operate cellular phones when working on or near any fuel related components. Highly flammable vapours are always present and may ignite. Failure to follow these instructions may result in personal injury.

• NOTE: The procedure shown is for the cylinder number 1 injector, the procedure for all other injectors is similar.

All vehicles

1. Release the fuel system pressure.
   For additional information, refer to Section 310-00 Fuel System - General Information.

Vehicles with supercharger

2. Remove the charge air coolers.
   For additional information, refer to Section 303-12 Intake Air Distribution and Filtering.

Vehicles without supercharger

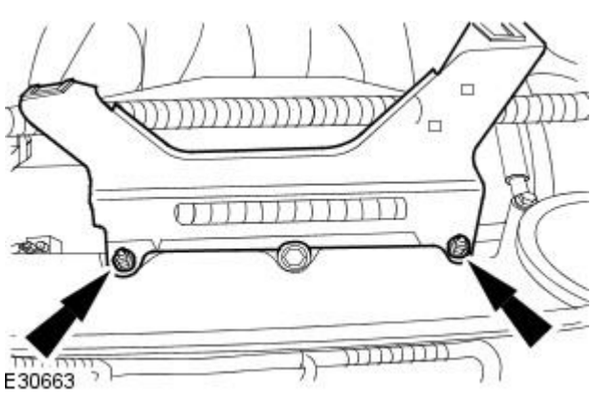

3. Remove the engine cover retaining bracket.
   - Detach the knock sensor (KS) wiring harness.

All vehicles

• NOTE: Vehicles without supercharger shown, vehicles with supercharger similar.

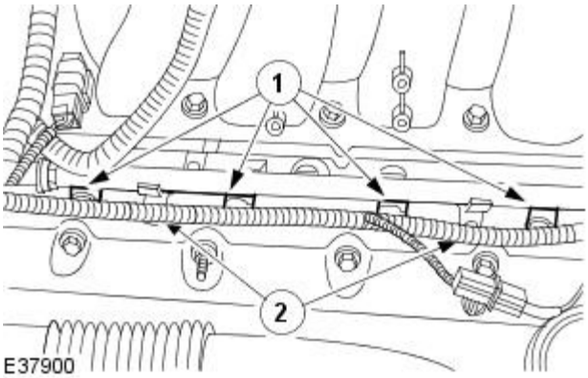

4. Detach the fuel charging wiring harness.

1. Disconnect the fuel injector electrical connectors.
2. Detach the fuel charging wiring harness.

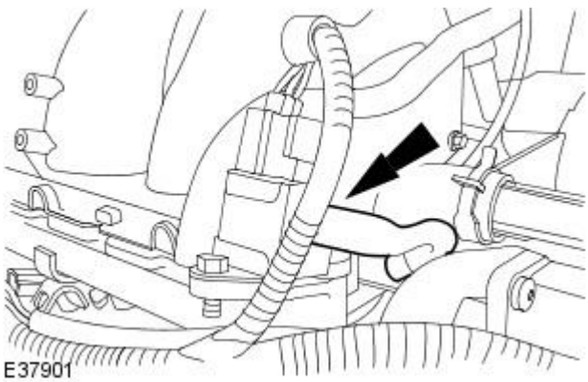

5. Disconnect the fuel pressure regulator vacuum hose.

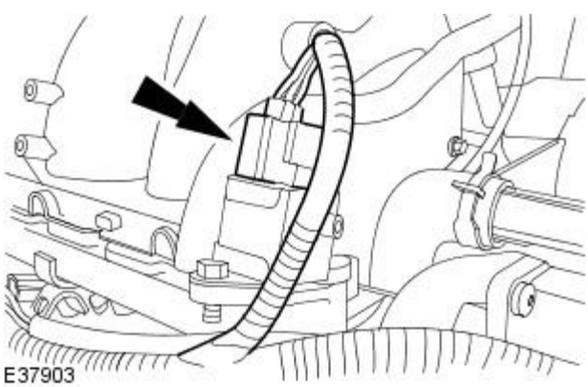

6. Disconnect the fuel pressure regulator electrical connector.

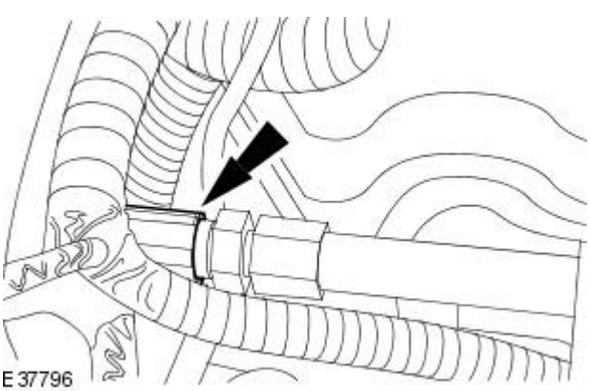

7. Disconnect the fuel temperature sensor electrical connector.

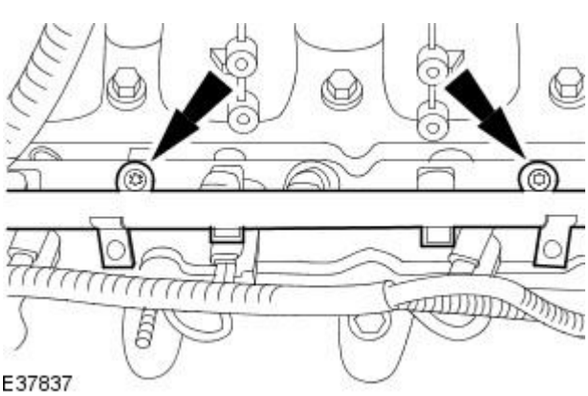

8. Remove the fuel injection supply manifold retaining bolts.

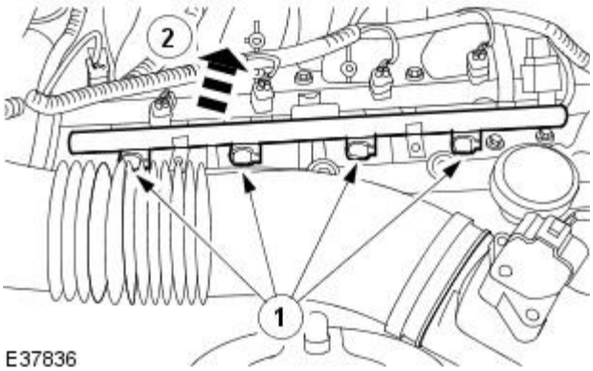

9. Reposition the fuel injection supply manifold.

1. Detach the fuel injection supply manifold.
2. Reposition the fuel injection supply manifold.

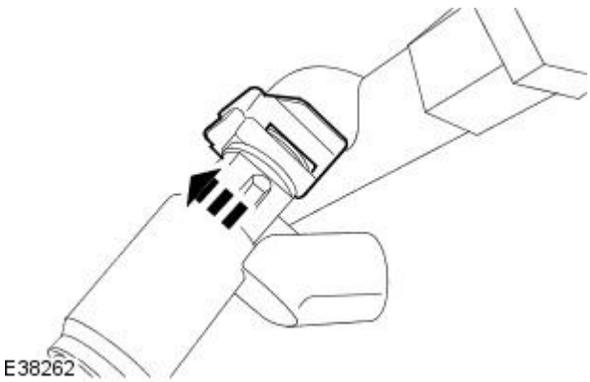

10. Remove the fuel injector retaining clip.

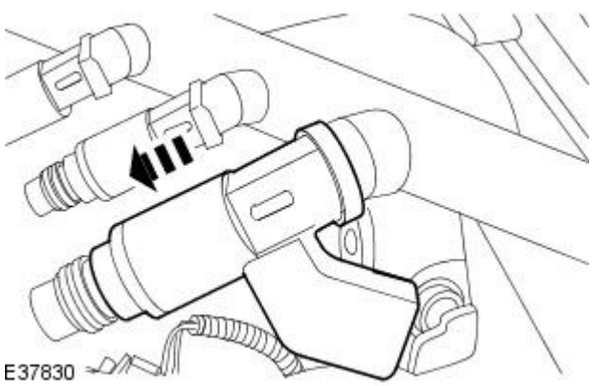

11. Remove the fuel injector.

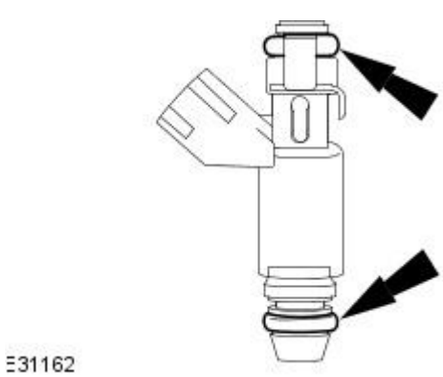

12. Remove and discard the fuel injector O-ring seals.

Installation

All vehicles

1. NOTE: Install new fuel injector O-ring seals.

• NOTE: Lubricate the fuel injector O-ring seals with clean engine oil to aid installation.

To install, reverse the removal procedure.

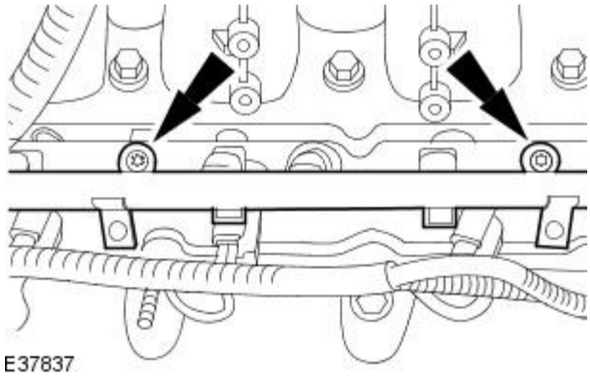

2. NOTE: Vehicles without supercharger shown, vehicles with supercharger similar.

Tighten to 9 Nm.

Vehicles without supercharger

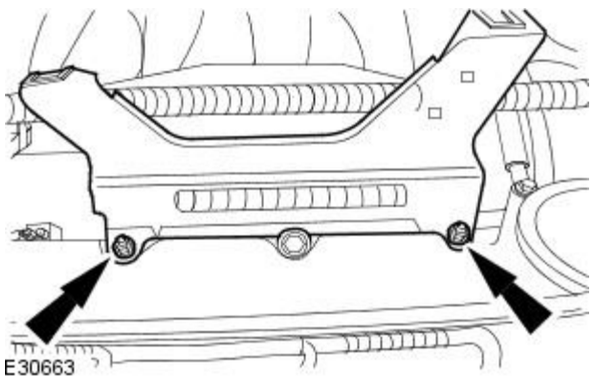

3. Tighten to 6 Nm.

Fuel Charging and Controls - Throttle Body

Removal and Installation

Removal

1. Remove the air cleaner outlet pipe.
For additional information, refer to Section 303-12 Intake Air Distribution and Filtering.

2. WARNING: To avoid hot coolant or steam blowing out of the cooling system, use extreme care when removing the coolant expansion tank pressure cap. Wait until the engine has cooled down, then insulate the coolant pressure cap with a suitable cloth and slowly loosen the coolant expansion tank pressure cap until the cooling system pressure is released. Step back while the pressure is released from the system. When all of the pressure has been released slowly remove the coolant expansion tank pressure cap (still with the suitable cloth in position) from the coolant expansion tank. Failure to follow this instruction may result in personal injury.

Release the cooling system pressure.

- Remove the coolant expansion tank pressure cap.

3. Disconnect the throttle body electrical connectors.

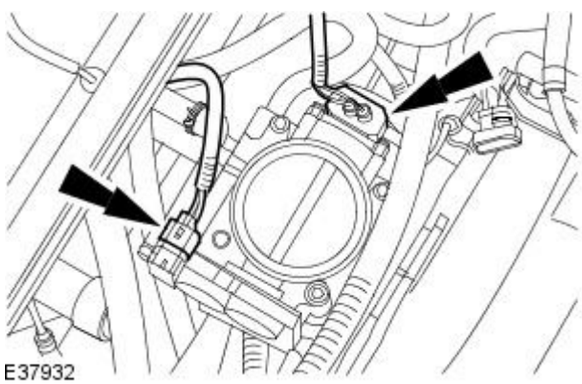

4. NOTE: Cap the throttle body coolant hoses to minimize coolant loss.

Disconnect the throttle body coolant hoses.

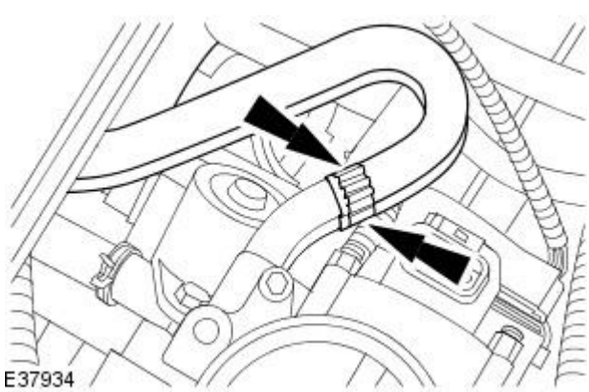

5. Remove the throttle body.

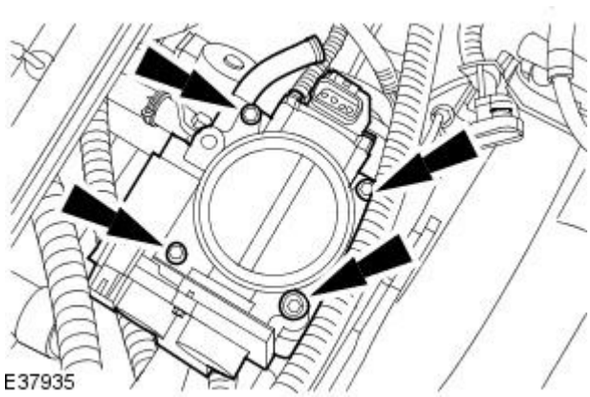

6. Remove and discard the throttle body gasket.

Installation

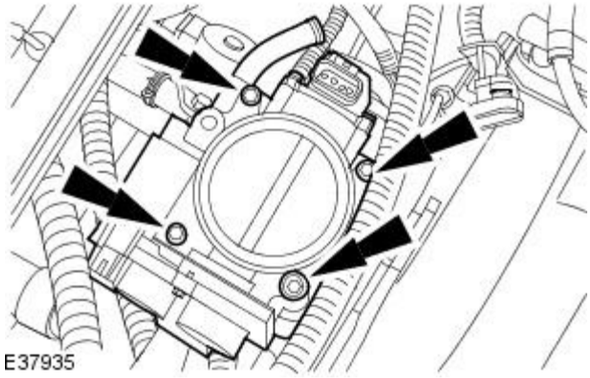

1. NOTE: Install a new throttle body gasket.

Install the throttle body.

- Tighten to 10 Nm.

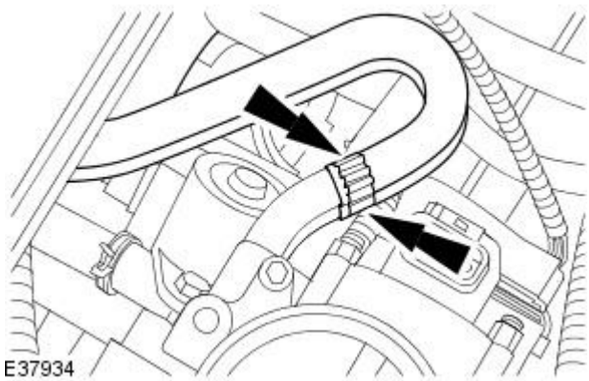

2. Uncap the throttle body coolant hoses.

3. Connect the coolant hoses.

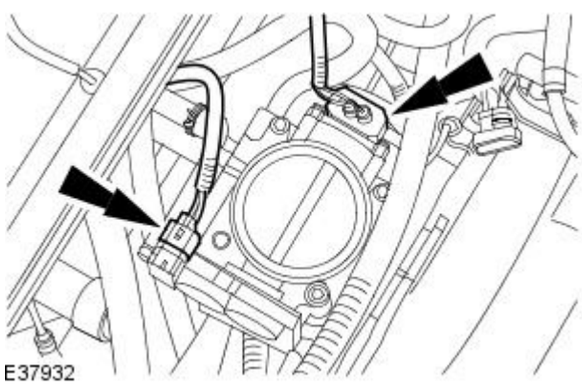

4. Connect the throttle body electrical connectors.

5. Check and, if necessary, top up the cooling system.

6. Install the coolant expansion tank pressure cap.

7. Install the air cleaner outlet pipe.
For additional information, refer to Section 303-12 Intake Air Distribution and Filtering.

Accessory Drive -

Torque Specifications

Description	Nm	lb-ft	lb-in
Accessory drive belt tensioner retaining bolt	40	30	-
Accessory drive belt idler pulley retaining bolt	40	30	-
Supercharger belt tensioner retaining bolt	40	30	-
Supercharger belt idler pulley retaining bolt	40	30	-

Accessory Drive - Accessory Drive

Description and Operation

Accessory Drive Components

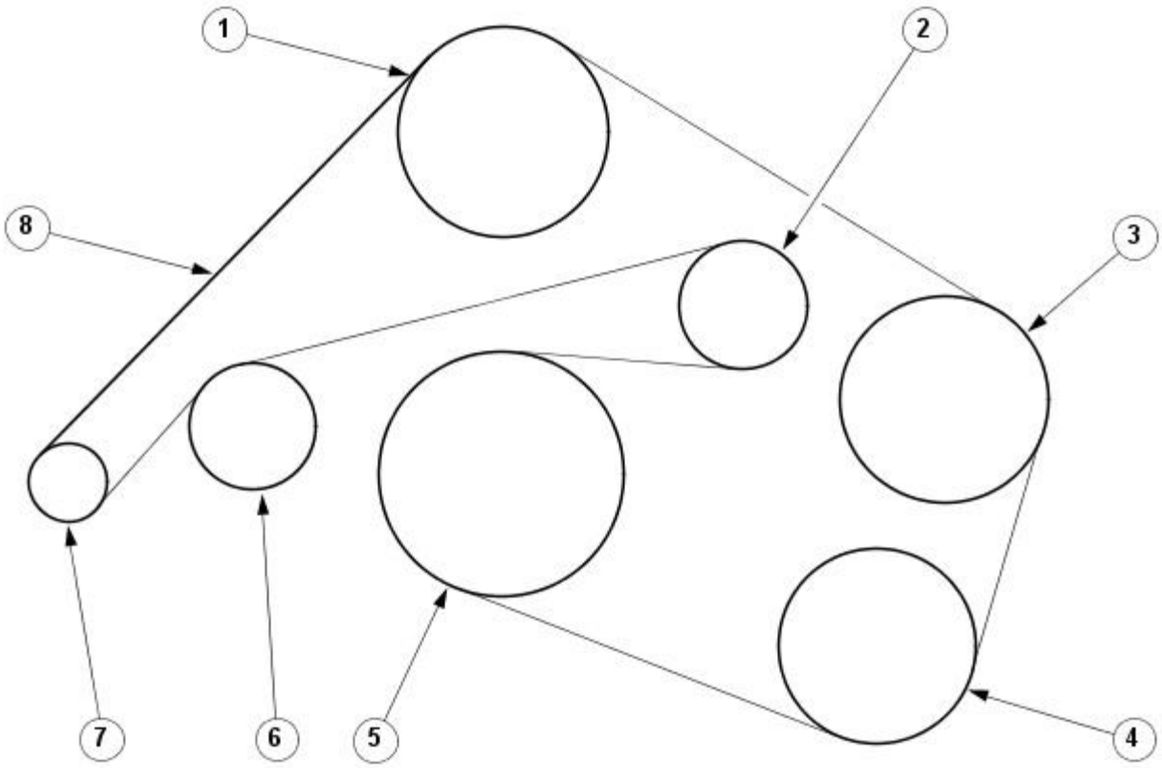

E38582

Item	Part Number	Description
1	—	Water pump pulley
2	—	Accessory drive belt tensioner
3	—	Power steering pump pulley
4	—	Air conditioning compressor pulley
5	—	Crankshaft pulley
6	—	Accessory drive belt idler pulley
7	—	Generator pulley
8	-	Accessory drive belt

Supercharger Drive Components

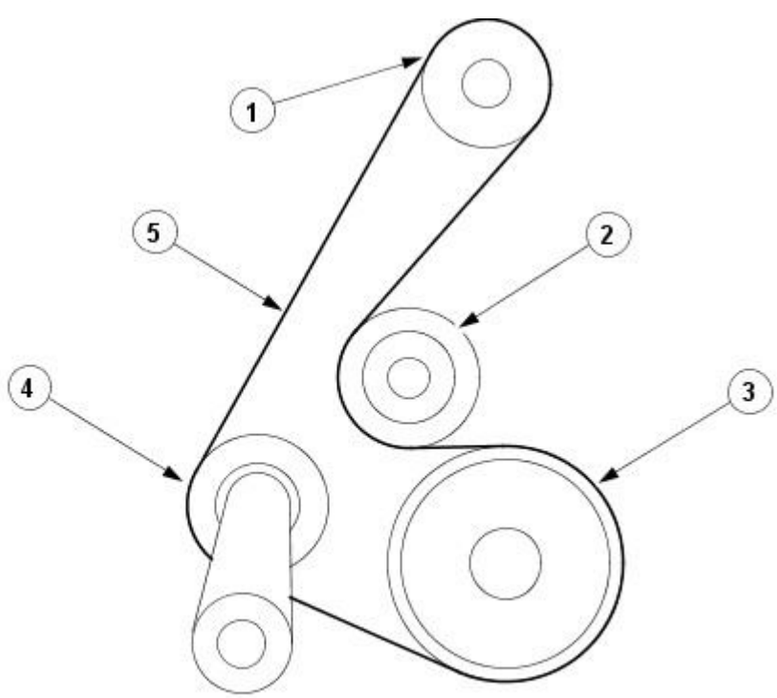

E38583

Item	Part Number	Description
1	—	Supercharger pulley
2	—	Supercharger belt idler pulley

3	—	Crankshaft pulley
4	—	Supercharger belt tensioner
5	-	Supercharger belt

Crankshaft Pulley

The combined crankshaft pulley and torsional vibration damper drives a single, six ribbed vee belt. The belt drives all of the engine-mounted accessories such as the generator, the power assisted steering pump, the air-conditioning compressor and the coolant water pump. On vehicles with supercharger the crankshaft pulley also drives an eight ribbed vee belt. This belt drives the supercharger.

Air Conditioning Compressor Drive

This is positioned at the lowest point of the front-end accessory drive on the left hand side accessory mounting.

Power Assisted Steering Pump Drive

The power assisted steering pump pulley is located on the left-hand side, above the air conditioning compressor.

Generator Drive

The generator is fitted on the right hand accessory mounting.

Supercharger Drive

The supercharger is located between the left-hand and right-hand cylinders and retained at three mounting points.

Accessory drive belt tensioner and supercharger belt tensioner

The accessory drive belt tensioner and supercharger belt tensioner is calibrated to provide the correct amount of tension to the belt for a given drive system. If incorrect operation of the tensioner is suspected the tensioner should be replaced.

Accessory drive belt and supercharger belt

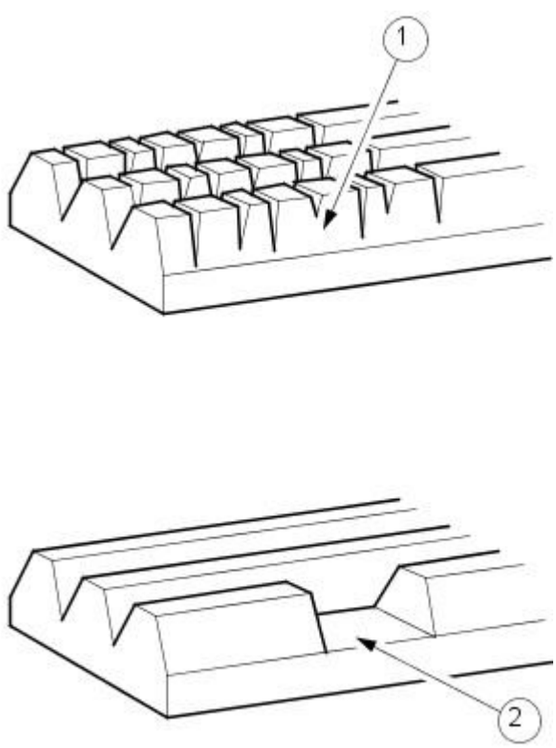

VUJ0000908

Item	Description
1	Acceptable drive belt cracking
2	Unacceptable drive belt damage

The accessory drive belt and the supercharger belt should be inspected at every routine service for excessive wear and damage. A drive belt which displays symptoms of cracking may be perfectly fit for further service.

Should cracking be detected, serviceability may be assessed using the following guidelines:

- Fifteen cracks per rib over a 100 mm length of drive belt is acceptable.
- Section(s) of belt missing from any rib is not acceptable and the drive belt must be renewed.

Accessory drive belt tensioner

E30135

The accessory drive belt tensioner consists of an idler pulley which is free to rotate on a bearing, located at the end of a spring-loaded pivot arm.

The pivot arm can be turned counter-clockwise (viewed from the front of the engine) for accessory drive belt removal and installation.

The accessory drive belt wear indicators are incorporated on the bottom of the accessory drive belt tensioner. When the indicators are aligned the accessory drive belt requires replacing.

Supercharger belt tensioner

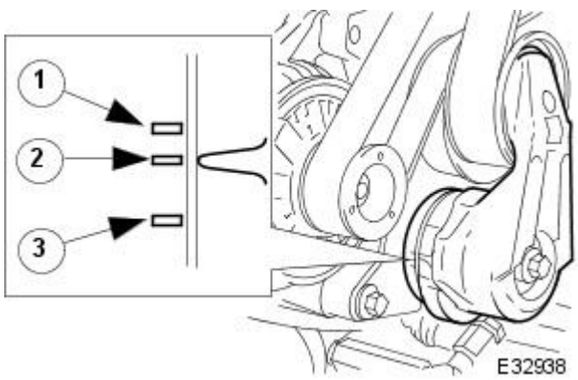

Wear indicator position	Description
1	Minimum supercharger belt length
2	Maximum supercharger belt length
3	Requires new supercharger belt

The supercharger belt tensioner consists of an idler pulley which is free to rotate on a bearing, located at the end of a spring-loaded pivot arm.

The pivot arm can be turned counter-clockwise (viewed from the front of the engine) for accessory drive belt removal and installation.

Published: 11-May-2011

Accessory Drive - Accessory Drive

Diagnosis and Testing

Inspection and Verification

1. **1.** Verify the customer concern.
2. **2.** Visually inspect for obvious signs of mechanical damage.

Visual Inspection Chart

Mechanical
Accessory drive belt
Accessory drive belt tension
Accessory drive belt tensioner
Accessory drive belt pulleys
Supercharger belt
Supercharger belt tension
Supercharger belt tensioner
Supercharger belt pulley

3. **3.** If an obvious cause for an observed or reported concern is found, correct the cause (if possible) before proceeding to the next step.
4. **4.** If the concern is not visually evident, verify the symptom and refer to the Symptom Chart.

Symptom Chart

Symptom Chart

Symptom	Possible Sources	Action
Accessory drive belt noise or squeal	* Accessory drive belt pulley(s). * Lubricant or other contamination. * Accessory drive belt.	* DETERMINE where the noise is coming from. CHECK pulley alignment, freedom of rotation or damage. REPAIR or INSTALL new parts as necessary. * CHECK accessory drive belt for contamination. If contaminated, INSTALL a new accessory drive belt. * CHECK accessory drive belt for correct application.
Accessory drive belt does not hold tension.	* Accessory drive belt cracking or damaged. * Tensioner worn or damaged.	* INSPECT accessory drive belt for cracking or damage. INSTALL a new accessory drive belt if required. * CHECK accessory drive belt tensioner for damage and correct operation. INSTALL a new accessory drive belt tensioner if required.
Supercharger belt noise or squeal	* Supercharger belt pulley. * Lubricant or other contamination. * Supercharger belt.	* DETERMINE where the noise is coming from. CHECK pulley alignment, freedom of rotation or damage. REPAIR or INSTALL new parts as necessary. * CHECK supercharger belt for contamination. If contaminated, INSTALL a new supercharger belt. * CHECK supercharger belt for correct application.
Supercharger belt does not hold tension.	* Supercharger belt cracking or damaged. * Tensioner worn or damaged.	* INSPECT supercharger belt for cracking or damage. INSTALL a new supercharger belt if required. * CHECK supercharger belt tensioner for damage and correct operation. INSTALL a new supercharger belt tensioner if required.

Component Tests

Accessory drive belt tensioner or supercharger belt tensioner-mechanical

The only mechanical check that needs to be made is a check for the accessory drive belt tensioner or supercharger belt tensioner 'stick, grab or bind'.

1. **1.** Remove the drive belt in the area of the drive belt tensioner .
2. **2.** Using the correct tool, rotate the drive belt tensioner from its relaxed position through its full stroke and back to the relaxed position to make sure there is no 'stick, grab or bind', and to make sure that there is tension on the drive belt tensioner spring.
3. **3.** If the drive belt tensioner meets the above criteria, proceed to test the drive belt tensioner dynamically. If the drive belt tensioner does not meet the above criteria install a new drive belt tensioner.
   REFER to Accessory Drive Belt Tensioner - / Supercharger belt tensioner in this section.

Accessory drive belt tensioner or supercharger belt tensioner-dynamic

The accessory drive belt tensioner or supercharger belt can be checked dynamically as follows:

1. **1.** With the engine running, observe drive belt tensioner movement, the accessory drive belt tensioner should move (respond) when the air conditioning clutch cycles (if equipped), both the accessory drive belt tensioner and supercharger belt tensioner should move (respond) when the engine is accelerated rapidly. If the drive belt tensioner movement is erratic without air conditioning clutch cycling or engine acceleration, a pulley or shaft is probably bent, or a pulley is distorted. Excessive drive belt rideout (uneven depth of grooves in the drive belt) can cause excessive drive belt tensioner movement. Check condition by installing a new accessory drive belt.
   REFER to Accessory Drive Belt - / Supercharger belt in this section.
2. **2.** With the engine off, check routing of the accessory drive belt.
   REFER to Description and Operation in this section.
3. **3.** Inspect the drive belt tensioner wear indicator to confirm the accessory drive belt is within operating range. Install a new accessory drive belt or supercharger belt if necessary .
   REFER to Accessory Drive Belt - / Supercharger belt in this section.
4. **4.** Rotate the accessory drive belt tensioner and check for a binding or seized condition. Install a new accessory drive belt tensioner or supercharger belt tensioner if necessary.
   REFER to Accessory Drive Belt Tensioner - / Supercharger belt tensioner in this section.

Accessory Drive - Accessory Drive Belt

Removal and Installation

Removal

Vehicles with supercharger

1. Remove the supercharger belt.
   For additional information, refer to Supercharger Belt - in this section.

Vehicles without supercharger

2. Disconnect the battery ground cable.
   For additional information, refer to Section 414-01 Battery, Mounting and Cables.
3. Remove the oil filler cap.

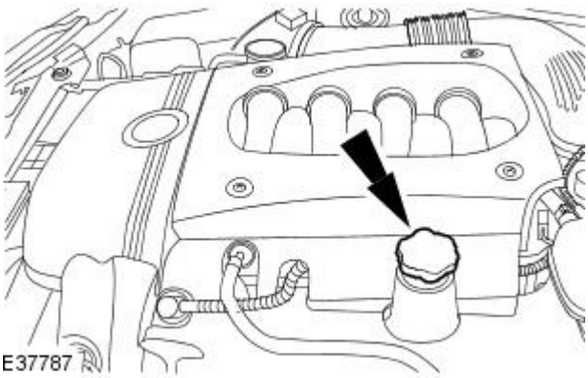

4. Remove the engine cover.

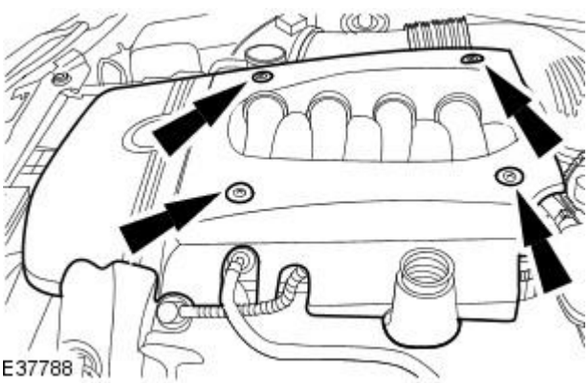

All vehicles

5. Detach the accessory drive belt.
   1. Rotate the accessory drive belt tensioner counter-clockwise
      1. Use a 3/8 inch square drive bar to rotate the accessory drive belt tensioner.
   2. Detach the accessory drive belt.

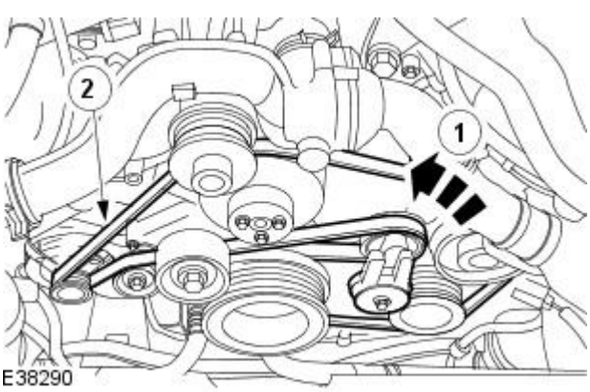

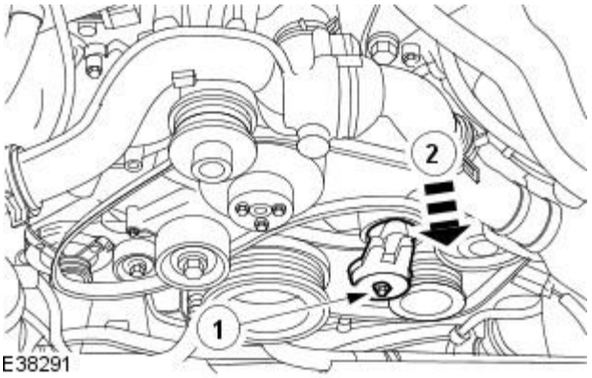

6. Reposition the accessory drive belt tensioner.

1. Loosen the accessory drive belt tensioner retaining bolt.
2. Reposition the accessory drive belt tensioner.

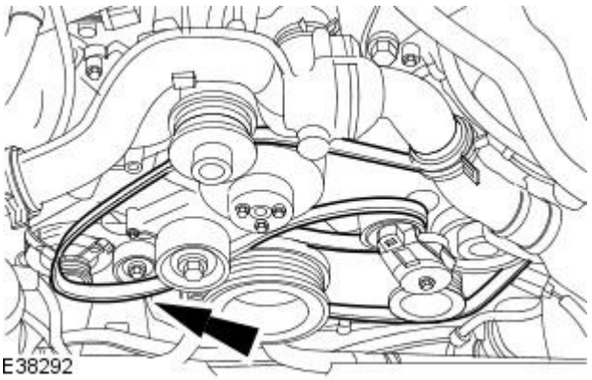

7. Remove the accessory drive belt.

Installation

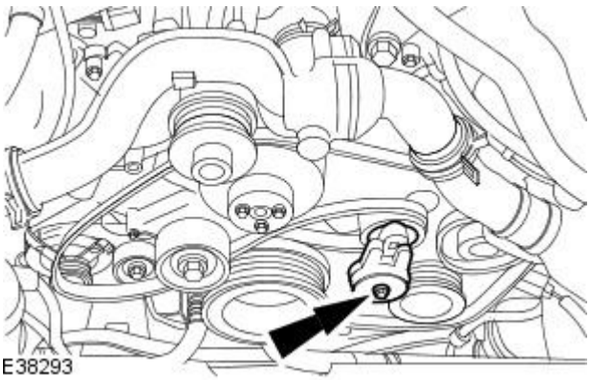

1. To install, reverse the removal procedure.

1. Tighten to 40 Nm.

Accessory Drive - Accessory Drive Belt Idler Pulley

Removal and Installation

Special Tool(s)	
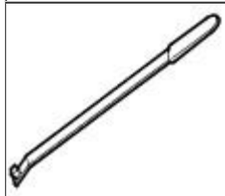 303-631	Belt tensioner release tool 303-631

Removal

All vehicles

1. Disconnect the battery ground cable.
   For additional information, refer to Section 414-01 Battery, Mounting and Cables.

Vehicles without supercharger

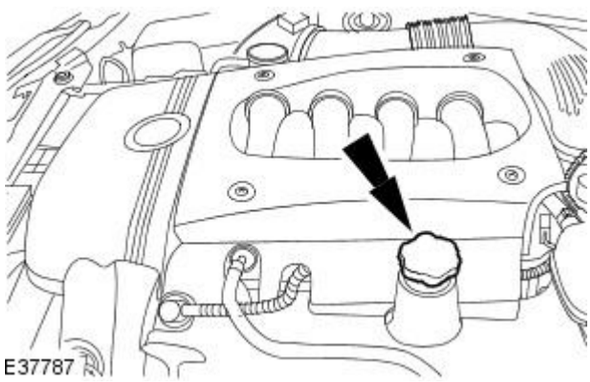
E37787

2. Remove the oil filler cap.

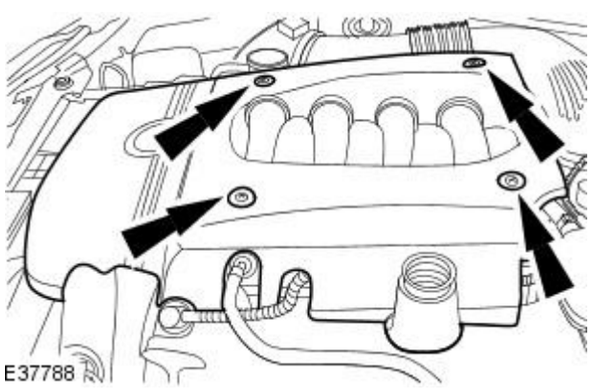
E37788

3. Remove the engine cover.

Vehicles with supercharger

- NOTE: Twin fan and motor assembly shown removed for clarity

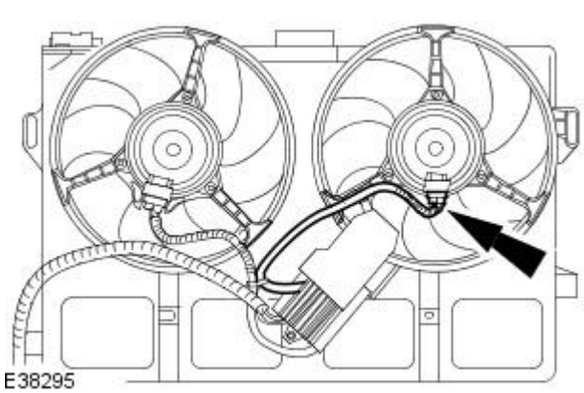
E38295

4. Disconnect the right-hand cooling fan electrical connector.

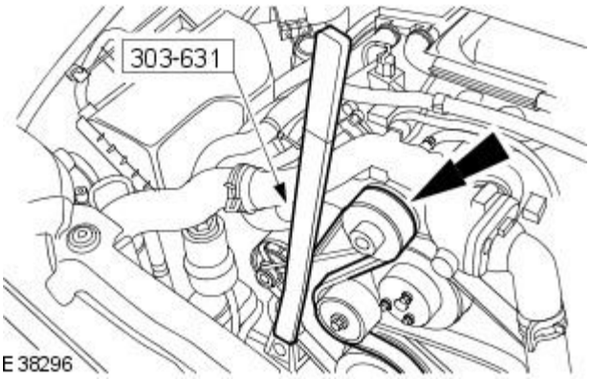

5. Using the special tool, detach the the supercharger drive belt.

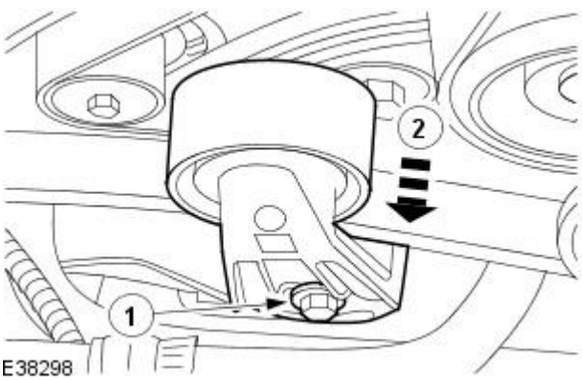

6. Reposition the supercharger belt tensioner.

1. Loosen the supercharger belt tensioner retaining bolt.
2. Reposition the supercharger belt tensioner.

All vehicles

- NOTE: Twin fan and motor assembly shown removed for clarity

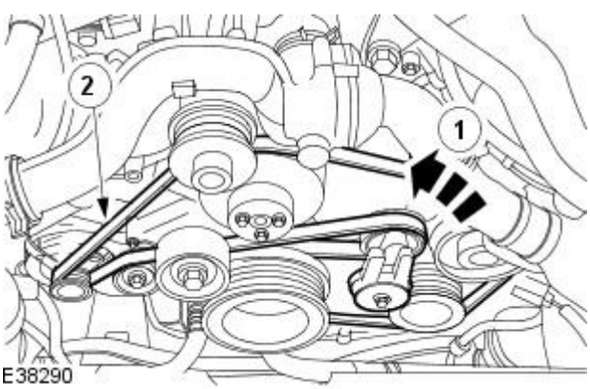

7. Detach the accessory drive belt.

1. Rotate the accessory drive belt tensioner counter-clockwise
   1. Use a 3/8 inch square drive bar to rotate the accessory drive belt tensioner.
2. Detach the accessory drive belt.

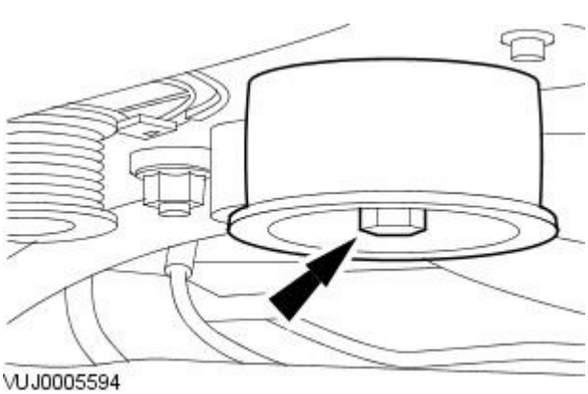

8. Remove the accessory drive belt idler pulley.

Installation

All vehicles

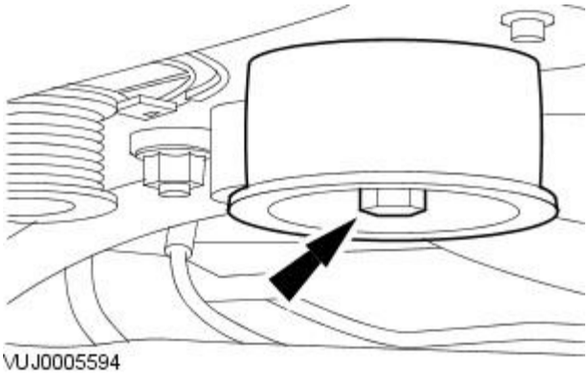

1. To install, reverse the removal procedure.

- Tighten to 40 Nm.

Vehicles with supercharger

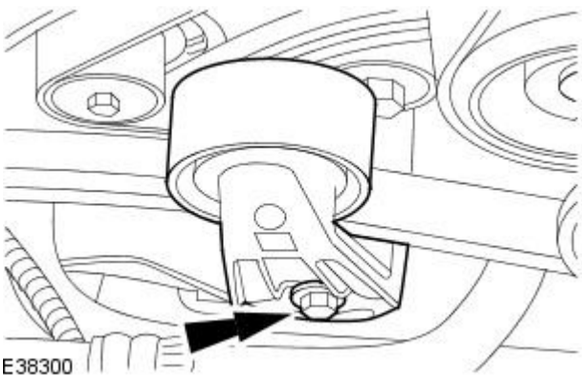

2. Tighten to 40 Nm.

Accessory Drive - Accessory Drive Belt Tensioner

Removal and Installation

Removal

All vehicles

1. Disconnect the battery ground cable.
   For additional information, refer to Section 414-01 Battery, Mounting and Cables.

Vehicles without supercharger

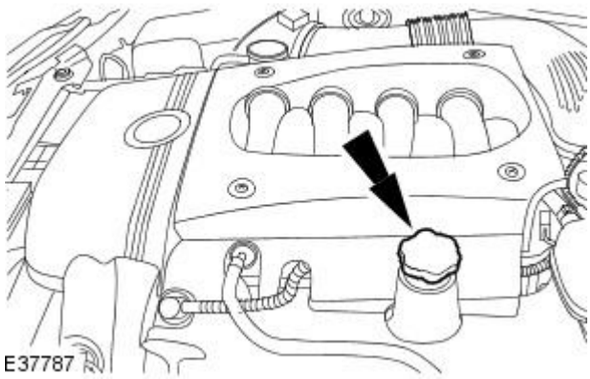

2. Remove the oil filler cap.

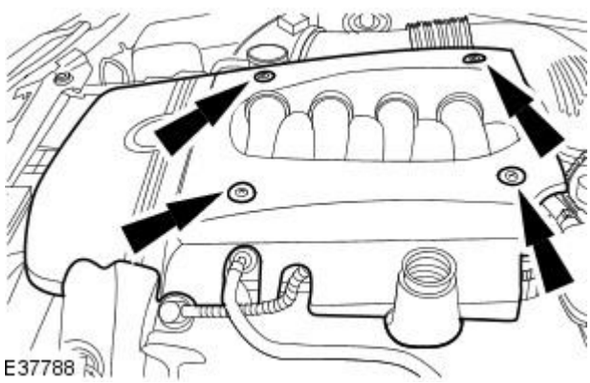

3. Remove the engine cover.

All vehicles

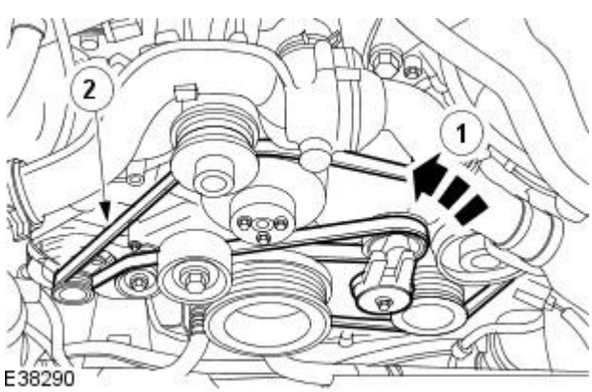

4. Detach the accessory drive belt.
   1. Rotate the accessory drive belt tensioner counter-clockwise
      1. Use a 3/8 inch square drive bar to rotate the accessory drive belt tensioner.
   2. Detach the accessory drive belt.

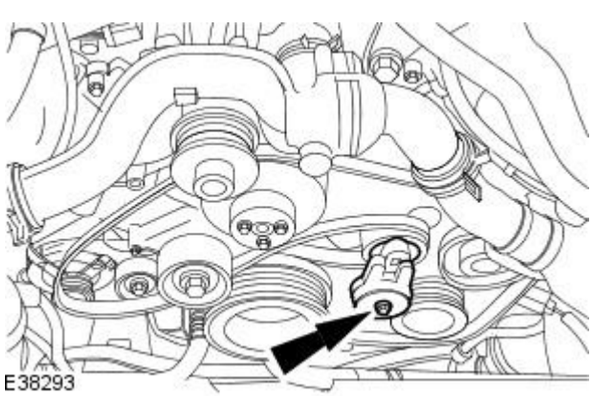

5. Remove the accessory drive belt tensioner.

Installation

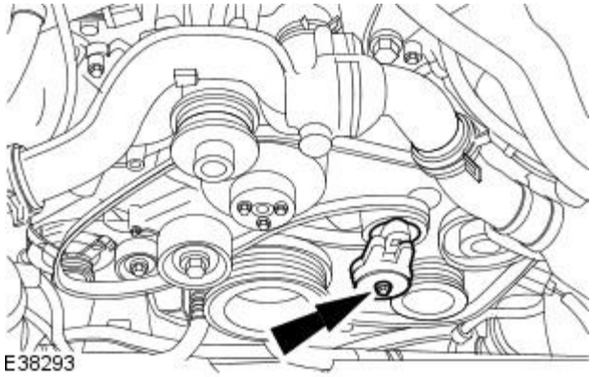

1. To install, reverse the removal procedure.

1. Tighten to 40 Nm.

Accessory Drive - Supercharger Belt

Removal and Installation

Special Tool(s)	
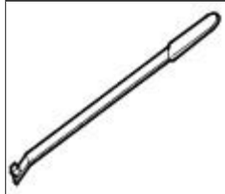 303-631	Belt tensioner release tool 303-631

Removal

1. Disconnect the battery ground cable.
For additional information, refer to Section 414-01 Battery, Mounting and Cables.

• NOTE: Twin fan and motor assembly shown removed for clarity

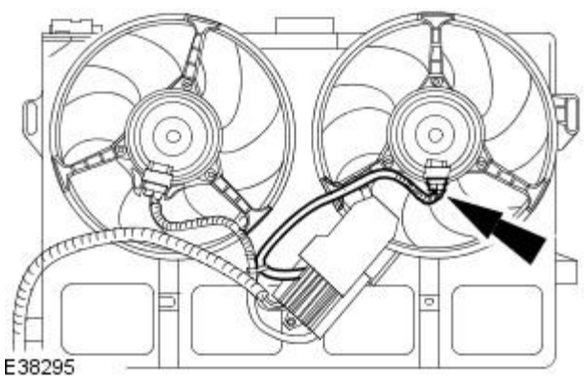

2. Disconnect the right-hand cooling fan electrical connector.

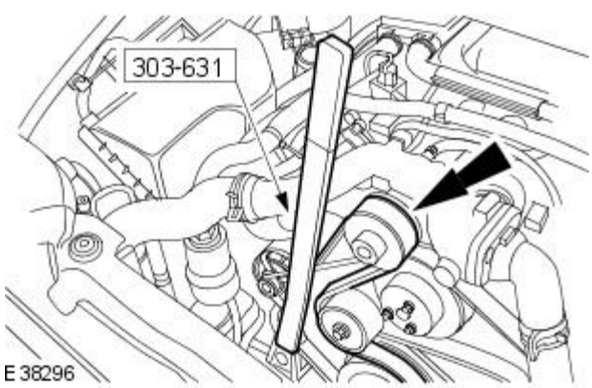

3. Using the special tool, detach the the supercharger drive belt.

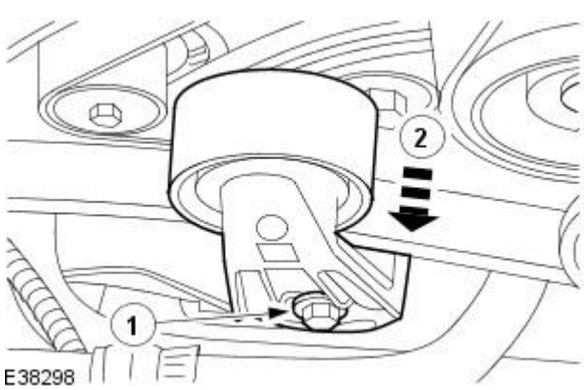

4. Reposition the supercharger belt tensioner.

1. Loosen the supercharger belt tensioner retaining bolt.
2. Reposition the supercharger belt tensioner.

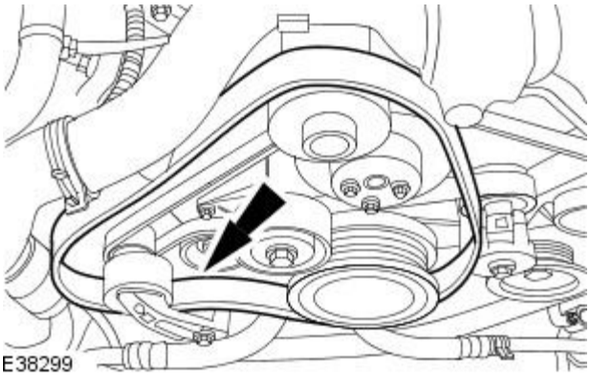

5. Remove the supercharger belt.

Installation

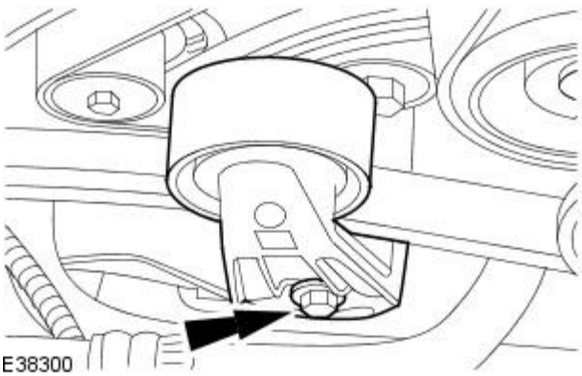

1. To install, reverse the removal procedure.

- Tighten to 40 Nm.

Accessory Drive - Supercharger Belt Idler Pulley

Removal and Installation

Special Tool(s)	
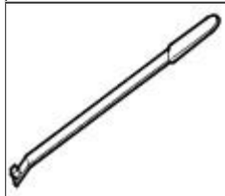 303-631	Belt tensioner release tool 303-631

Removal

1. Disconnect the battery ground cable.
   For additional information, refer to Section 414-01 Battery, Mounting and Cables.

• NOTE: Twin fan and motor assembly shown removed for clarity

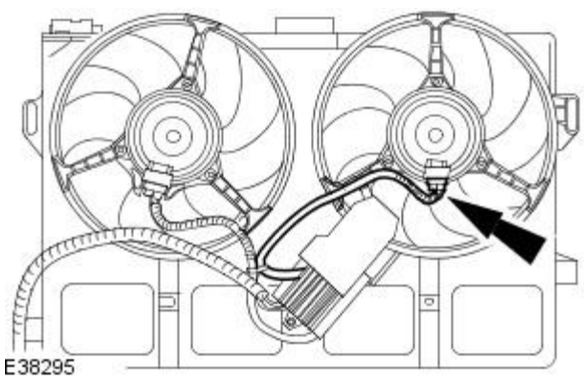

2. Disconnect the right-hand cooling fan electrical connector.

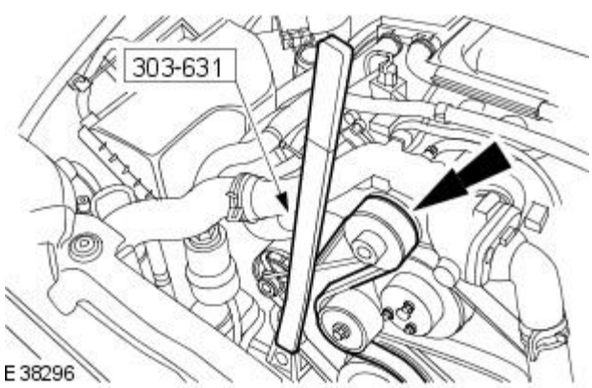

3. Using the special tool, detach the the supercharger drive belt.

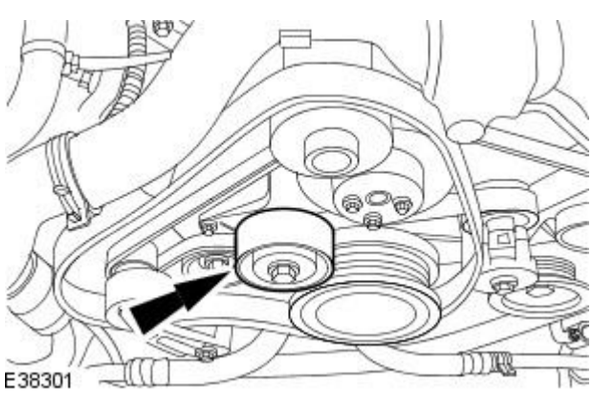

4. Remove the supercharger belt idler pulley.

Installation

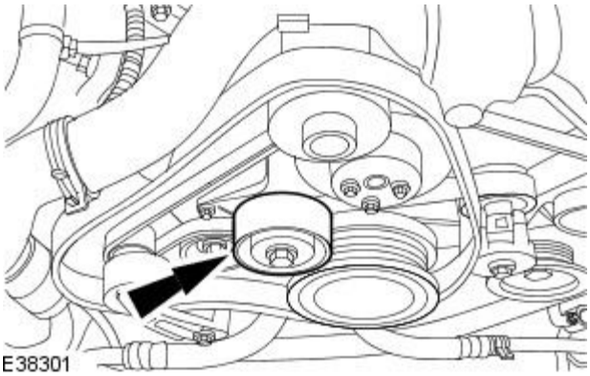

1. To install, reverse the removal procedure.

- Tighten to 40 Nm.

Accessory Drive - Supercharger Belt Tensioner

Removal and Installation

Special Tool(s)	
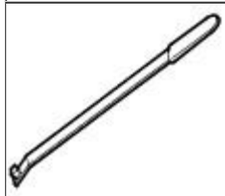 303-631	Belt tensioner release tool 303-631

Removal

1. Remove twin fan and motor assembly. For additional information, refer to Section 303-03A Engine Cooling / 303-03B Supercharger Cooling.
2. Using the special tool, detach the the supercharger drive belt.

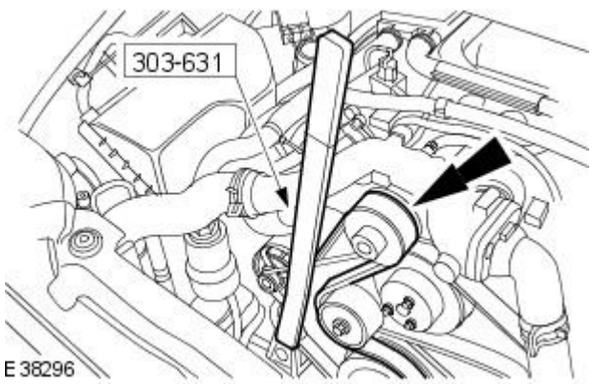

3. Remove the supercharger belt tensioner.

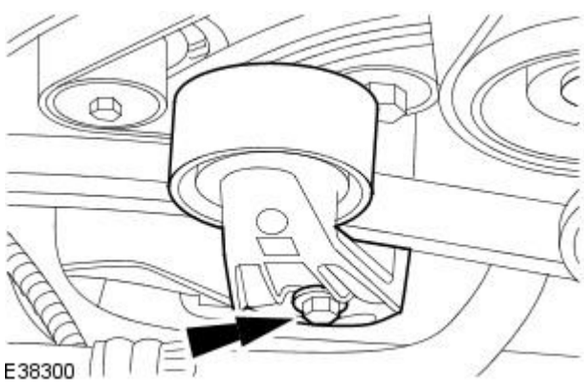

Installation

1. To install, reverse the removal procedure.
   - Tighten to 40 Nm.

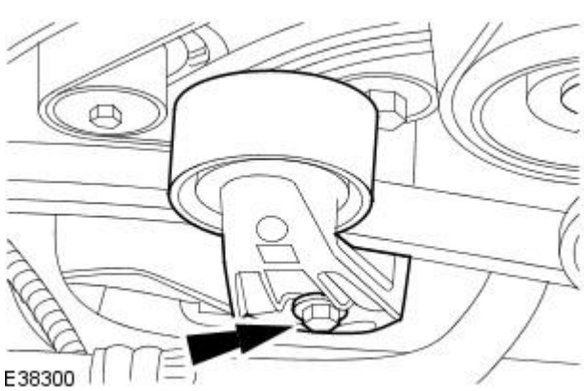

Starting System -

Torque Specifications

Description	Nm	lb-ft	lb-in
Starter motor retaining bolts	45	33	-
Battery to starter motor cable retaining nut	10	7	-
Battery to starter motor solenoid cable retaining nut	7	-	62

Published: 11-May-2011

Starting System - Starting System

Description and Operation

The function of the starting system is to crank the engine fast enough to allow the engine to start. Heavy cables, connectors and switches are used in the system because of the large currents required.

The starting system consists of a pre-engaged type starter motor, battery, remote control switch (ignition switch) and relay. When the starter is operated from the ignition switch, the engagement lever moves the pinion into mesh with the engine ring gear teeth, the electrical contacts within the solenoid complete the high power circuit and the starter motor operates to turn the engine.

The vehicles have a transmission range sensor attached to the circuit which prevents operation of the starter motor unless NEUTRAL or PARK are selected.

The sequence of operation is as follows:

- Ignition switch in the start position III.
- Starter relay activated.
- Voltage provided to the starter motor solenoid.
- Starter solenoid engages the drive pinion to the flexiplate.
- Starter solenoid switches the battery current to the starter motor.
- System remains engaged until the ignition switch is returned to the run position.

Starting System - Starting System

Diagnosis and Testing

Verification and Inspection

WARNING: Make sure the vehicle is in **NEUTRAL** or **PARK** for vehicles with automatic transmission, **NEUTRAL** for vehicles with manual transmission, and apply the parking brake. Failure to follow this instruction may result in personal injury.

1. **1.** Verify the customer concern.
2. **2.** Visually inspect for obvious signs of mechanical or electrical damage.

Visual Inspection Chart

Mechanical	Electrical
• Starter Motor • Flywheel Ring Gear • Engine Seized	• Battery condition, state of charge • Starter Motor • Fuse 3 of the EMS fuse box • High power protection module • Starter relay • Ignition switch • Wiring harness(es) • Damaged, loose or corroded connectors • Key transponder module (KTM) • Body processor module (BPM) • Engine Control Module (ECM)

3. **3.** If an obvious cause for an observed or reported concern is found, correct the cause, (if possible) before proceeding to the next step.
4. **4.** Where the Jaguar approved diagnostic system is available, complete the S93 report before clearing any or all fault codes from the vehicle.

• NOTE: If a DTC cannot be cleared, then there is a permanent fault present that flags again as soon as it is cleared. (The exception to this is P1260, which will only clear following an ignition OFF/ON cycle after rectification.)

5. **5.** If the cause is not visually evident and the Jaguar approved diagnostic system is not available, use a fault code reader to retrieve the fault codes before proceeding to the Diagnostic Trouble Code (DTC) Index Chart, or the Symptom Chart if no DTCs are set.
6. **6.** Using the Jaguar approved diagnostic system where available, and a scan tool where not, check the freeze frame data for information on the conditions applicable when the fault was flagged. The format of this will vary, depending on the tool used, but can provide information useful to the technician in diagnosing the fault.

CAUTION: When probing connectors to take measurements in the course of the pinpoint tests, use the adaptor kit, part number 3548-1358-00.

• NOTE: When performing electrical voltage or resistance tests, always use a digital multimeter (DMM) accurate to 3 decimal places, and with an up-to-date calibration certificate. When testing resistance, always take the resistance of the DMM leads into account.

• NOTE: Check and rectify basic faults before beginning diagnostic routines involving pinpoint tests.

Symptom Chart

Symptom (general)	Symptom (specific)	Possible source	Action
Non-Start	Engine does not crank	• Engine siezed • Battery and/or cables • Starter motor • Starter relay • Ignition switch • ECM relay • TCM • Body processor module	Check that the engine turns. Check the battery condition and state of charge. For starter motor and cable tests, GO to Pinpoint Test A.
	Engine cranks too fast/slow	• Battery and/or cables • Starter motor • Cylinder compression	Check the battery condition and state of charge. For starter motor and cable tests, GO to Pinpoint Test A. Check compressions.

Diagnostic Trouble Code (DTC) index

DTC	Description	Possible Source	Action
P0617	Starter relay drive circuit high voltage/starter relay request on (ignition switch to the START position)	• Starter relay drive circuit; short circuit to high voltage • Starter relay failure	For relay drive circuit tests, GO to Pinpoint Test B. For starter relay circuit tests, REFER to Section 303-14 Electronic Engine Controls.
P1245	Engine crank signal low voltage	• BPM to ECM circuit; open circuit • Ignition switch to BPM circuit failure	For BPM and ignition switch circuit tests, GO to Pinpoint Test C.

DTC	Description	Possible Source	Action
P1246	Engine crank signal high voltage	• BPM to ECM circuit; short circuit to high voltage • Ignition switch to BPM circuit failure	For BPM and ignition switch circuit tests, GO to Pinpoint Test C.

Pinpoint Tests

PINPOINT TEST A : CHECK THE POWER SUPPLY, GROUND AND TRIGGER TO THE STARTER CIRCUIT	
• NOTE: During cranking with the engine disabled, observe the engine cranking speed. A cranking speed as low as 90 RPM is acceptable, but will be difficult to measure. A degree of discretion must be used as to when an engine is cranking too slowly.	
TEST CONDITIONS	**DETAILS/RESULTS/ACTIONS**
A1: CHECK THE VOLT DROP ACROSS THE STARTER CIRCUIT	
	1 Measure the volt drop across the circuit between the battery positive terminal and the starter motor terminal, ST10.
	Is the volt drop greater than 1 volt? **Yes** CHECK the battery connections, cable connections at false bulkhead stud connector, and starter motor. Make sure all connections are in good condition and secure. If all connections are sound, INSTALL a new battery lead. REFER to Section 414-01 Battery, Mounting and Cables. TEST the system for normal operation. **No** GO to A2.
A2: CHECK THE VOLT DROP ACROSS THE STARTER CIRCUIT (CRANKING)	
	1 Disable the fuel or ignition system to prevent the engine starting.
	2 Turn the ignition switch to the CRANK position.
	3 Measure the volt drop across the circuit between the battery positive terminal and the starter motor terminal, ST10.
	Is the volt drop greater than 1 volt? **Yes** CHECK the battery connections, cable connections at false bulkhead stud connector, and starter motor. Make sure all connections are in good condition and secure. If all connections are sound, INSTALL a new battery lead. REFER to Section 414-01 Battery, Mounting and Cables. TEST the system for normal operation. **No** GO to A3.
A3: CHECK THE GROUND TO THE STARTER MOTOR	
	1 Measure the resistance between the engine GROUND lead and the starter motor body.
	Is the resistance greater than 5 ohms? **Yes** Clean the connection between the starter motor body and it's fittings, recheck the resistance. TEST the system for normal operation. **No** GO to A4.
A4: CHECK THE STARTER SIGNAL FROM THE STARTER RELAY	
	1 Remove fuse 5 from the rear power distribution box to disable the fuel pump module.
	2 Disconnect the starter motor signal electrical connector, ST03 (WR).
	3 Turn the ignition switch to the CRANK position.
	4 Measure the voltage between ST03 (WR) and GROUND.
	Is the voltage less than 10 volts? **Yes** GO to A5. **No** INSTALL a new starter motor. REFER to Starter Motor - in this section. TEST the system for normal operation.
A5: CHECK THE STARTER SIGNAL CIRCUIT FOR HIGH RESISTANCE	
	1 Remove the starter relay.
	2 Measure the resistance between the starter relay base, pin 02 and ST03 (WR).
	Is the resistance greater than 5 ohms? **Yes** REPAIR the high resistance circuit. For additional information, refer to the wiring diagrams. CLEAR the DTC. TEST the system for normal operation. **No** GO to B.

PINPOINT TEST B : DTC P0617; STARTER RELAY DRIVE CIRCUIT HIGH VOLTAGE	
TEST CONDITIONS	**DETAILS/RESULTS/ACTIONS**
B1: CHECK THE STARTER RELAY DRIVE CIRCUIT FOR HIGH RESISTANCE	
	1 Disconnect the battery negative terminal.
	2 Remove the starter relay.
	3 Disconnect the ECM electrical connector, EM80.
	4 Measure the resistance between the relay base, pin 02 (O) and EM80, pin 41 (O).
	Is the resistance greater than 5 ohms? **Yes** GO TO relay tests. REFER to Section 303-14 Electronic Engine Controls. **No** INSTALL a new starter motor. REFER to Starter Motor - in this section. TEST the system for normal operation.

PINPOINT TEST C : DTC P1245, P1246; ENGINE CRANK SIGNAL, HIGH/LOW VOLTAGE	
TEST CONDITIONS	**DETAILS/RESULTS/ACTIONS**
C1: CHECK THE BODY PROCESSOR MODULE (BPM) TO ENGINE CONTROL MODULE (ECM) CIRCUIT FOR HIGH RESISTANCE	

	1 Disconnect the battery negative termiinal.
	2 Disconnect the ECM electrical connector, EM80.
	3 Disconnect the BPM electrical connector, FC14.
	4 Measure the resistance between EM80, pin 06 (GO) and FC14, pin 72 (GO).
	Is the resistance greater than 5 ohms? **Yes** REPAIR the high resistance circuit. For additional information, refer to the wiring diagrams. CLEAR the DTC. TEST the system for normal operation. **No** GO to C2.
C2: CHECK THE BODY PROCESSOR MODULE (BPM) TO ENGINE CONTROL MODULE (ECM) CIRCUIT FOR SHORT TO HIGH VOLTAGE	
	1 Reconnect the battery negative termiinal.
	2 Turn the ignition switch to the ON position.
	3 Measure the voltage between EM80, pin 06 (GO) and GROUND.
	Is the voltage greater than 3 volts? **Yes** REPAIR the short circuit. For additional information, refer to the wiring diagrams. CLEAR the DTC. TEST the system for normal operation. **No** GO to C3.
C3: CHECK THE BODY PROCESSOR MODULE (BPM) TO ENGINE CONTROL MODULE (ECM) CIRCUIT FOR SHORT TO GROUND	
	1 Turn the ignition switch to the OFF position.
	2 Measure the resistance between EM80, pin 06 (GO) and GROUND.
	Is the resistance less than 10,000 ohms? **Yes** REPAIR the short circuit. For additional information, refer to the wiring diagrams. CLEAR the DTC. TEST the system for normal operation. **No** GO to C4.
C4: CHECK THE IGNITION SWITCH TO BODY PROCESSOR MODULE (BPM) CIRCUIT FOR HIGH RESISTANCE	
	1 Disconnect the battery negative termiinal.
	2 Disconnect the ignition switch electrical connector, FC04.
	3 Measure the resistance between FC04, pin 01 (GO) and FC14, pin 41 (GO).
	Is the resistance greater than 5 ohms? **Yes** REPAIR the high resistance circuit. For additional information, refer to the wiring diagrams. CLEAR the DTC. TEST the system for normal operation. **No** GO to C5.
C5: CHECK THE IGNITION SWITCH TO BODY PROCESSOR MODULE (BPM) CIRCUIT FOR SHORT TO HIGH VOLTAGE	
	1 Reconnect the battery negative termiinal.
	2 Turn the ignition switch to the ON position.
	3 Measure the voltage between FC14, pin 41 (GO) and GROUND.
	Is the voltage greater than 3 volts? **Yes** REPAIR the short circuit. For additional information, refer to the wiring diagrams. CLEAR the DTC. TEST the system for normal operation. **No** GO to C6.
C6: CHECK THE IGNITION SWITCH TO BODY PROCESSOR MODULE (BPM) CIRCUIT FOR SHORT TO GROUND	
	1 Turn the ignition switch to the OFF position.
	2 Measure the resistance between FC14, pin 41 (GO) and GROUND.
	Is the resistance less than 10,000 ohms? **Yes** REPAIR the short circuit. For additional information, refer to the wiring diagrams. CLEAR the DTC. TEST the system for normal operation. **No** Check the ignition switch function. (Switching action across the ignition switch contacts) If the switch function is normal, contact Dealer technical support for advice on possible BPM or ECM failure.

Published: 11-May-2011

Engine Ignition -

General Specifications

Item	Specification
Firing order	1-2-7-3-4-5-6-8
Spark plug type - Vehicles with supercharger	NGK-IFR-5N10
Spark plug type - Vehicles without supercharger	NGK-IFR-5N10
Spark plug gap	1 mm

Torque Specifications

Description	Nm	lb-ft	lb-in
Spark plugs	27	18	-
Ignition coil-on-plug retaining bolts	5	-	44

Published: 11-May-2011

Engine Ignition - Engine Ignition

Description and Operation

Component Locations

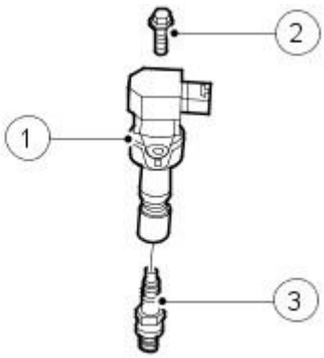

E31029

Item	Part Number	Description
1	-	Ignition coil-on-plug
2	-	Ignition coil-on-plug retaining bolt
3	-	Spark plug

The right-hand cylinders are numbered 7, 5, 3, 1 and the left-hand cylinders are numbered 8, 6, 4, 2 when viewed from the rear of the engine.

An ignition coil is located on each individual spark plug allowing the ignition timing to be adjusted independently.

The crankshaft position (CKP) sensor signal is the basis for ignition timing calculations. The alternating voltage signal from the CKP sensor is converted to a digital signal by the engine control module (ECM). This digital signal is then used to position the closing time of the primary circuit of the ignition coil. The effective range for ignition timing control is increased to the fact that there are no rotating parts.

On the basis of engine speed and load inputs, the ECM determines the ignition timing. This function also takes other inputs into consideration such as engine temperature, throttle position, knock control, camshaft position, traction control and electronic transmission control inputs.

This ignition system enables the customer to drive the vehicle home if an ignition coil or ignition coil wiring failure occurs. In the event of a wiring failure between the ECM and the ignition coil, the ignition coil will fail instead of the ignition coil fuse blowing, which will allow the remaining ignition coils to continue to function and the engine to limp home.

Engine Ignition - Engine Ignition

Diagnosis and Testing

Inspection and Verification

1. **1.** Verify the customer concern.
2. **2.** Confirm which, if any, warning lights and/or messages were displayed on the instrument cluster.

• NOTE: If any warning lights and/or messages were displayed when the fault occurred, refer to the Driver Information table for DTCs associated with the display, then to the DTC index table for possible sources and actions. Some warnings will appear to clear when the ignition is cycled. This is often because the warning has flagged as a result of one of the vehicle's on-board diagnostic routines having run to detect the fault. If the same routine is not run when the ignition is switched ON, the warning will not reflag until the routine does run. See the DTC summaries for drive cycle routines.

3. **3.** Visually inspect for obvious signs of mechanical or electrical damage.

Visual Inspection Chart

Mechanical	Electrical
• Engine oil level • Cooling system coolant level • Fuel level • Fuel Contamination/grade/quality • Throttle body • Poly-vee belt	• Fuses. • Wiring harness • Electrical connector(s) • Sensor(s) • Engine control module (ECM) • Transmission control module

4. **4.** Verify the following systems are working correctly:

- Air intake system
- Cooling system
- Charging system
- Fuel system

5. **5.** If an obvious cause for an observed or reported concern is found, correct the cause (if possible) before proceeding to the next step.
6. **6.** Where the Jaguar approved diagnostic system is available, complete the S93 report before clearing any or all fault codes from the vehicle.

• NOTE: If a DTC cannot be cleared, then there is a permanent fault present that flags again as soon as it is cleared. (The exception to this is P1260, which will only clear following an ignition OFF/ON cycle after rectification.)

7. **7.** If the cause is not visually evident and the Jaguar approved diagnostic system is not available, use a fault code reader to retrieve the fault codes before proceeding to the Diagnostic Trouble Code (DTC) Index Chart, or the Symptom Chart if no DTCs are set.
8. **8.** Using the Jaguar approved diagnostic system where available, and a scan tool where not, check the freeze frame data for information on the conditions applicable when the fault was flagged. The format of this will vary, depending on the tool used, but can provide information useful to the technician in diagnosing the fault.

CAUTION: When probing connectors to take measurements in the course of the pinpoint tests, use the adaptor kit, part number 3548-1358-00.

• NOTE: When performing electrical voltage or resistance tests, always use a digital multimeter (DMM) accurate to 3 decimal places, and with an up-to-date calibration certificate. When testing resistance, always take the resistance of the DMM leads into account.

• NOTE: Check and rectify basic faults before beginning diagnostic routines involving pinpoint tests.

Symptom Chart

Symptom	Possible source	Action
Engine cranks, but does not fire	• Engine breather system disconnected/restricted • Ignition system • Fuel system • Harness • CKP sensor • ECM fault	Check engine breather system, REFER to: Engine Emission Control (303-08 Engine Emission Control, Description and Operation). For ignition system tests, refer to pinpoint tests in this section. Check fuel pressure. For CKP tests, REFER to: Electronic Engine Controls (303-14 Electronic Engine Controls, Diagnosis and Testing). Contact Dealer technical support for advice on possible ECM failure.
Engine cranks and fires, but will not start	• Purge valve • Fuel pump • Coolant temperature sensor • Spark plugs • Check for water ingress into spark plug wells (SC only) • HT short to ground (tracking) check rubber boots for cracks/damage • Ignition coil failure(s) • Harness	For evaporative emissions components, REFER to: Evaporative Emissions (303-13 Evaporative Emissions, Description and Operation). Check fuel pressure. For ECT sensor tests, REFER to: Electronic Engine Controls (303-14 Electronic Engine Controls, Diagnosis and Testing). For ignition system tests, refer to pinpoint tests in this section.
Difficult to start cold	• Check coolant anti-freeze content • Battery • CKP sensor • EGR valve stuck open • Fuel pump • Coolant temperature sensor • Purge valve	For battery information, REFER to: Battery and Cables (414-01 Battery, Mounting and Cables, Description and Operation). For CKP sensor tests, REFER to: Engine Emission Control (303-08 Engine Emission Control, Description and Operation) / Electronic Engine Controls (303-14 Electronic Engine Controls, Diagnosis and Testing). For EGR system information, Check fuel pressure. For ECT

Symptom	Possible source	Action
		sensor tests, REFER to: Electronic Engine Controls (303-14 Electronic Engine Controls, Diagnosis and Testing). For evaporative emissions components, REFER to: Evaporative Emissions (303-13 Evaporative Emissions, Description and Operation).
Difficult to start hot	• Injector leak • Fuel temperature sensor • IAT sensor • MAF sensor • Purge valve • Fuel pump • Ignition system • Coolant temperature sensor • EGR valve stuck open	For fuel injectors, REFER to: Fuel Charging and Controls (303-04 Fuel Charging and Controls, Diagnosis and Testing). For fuel temperature sensor, IAT sensor and MAF sensor tests, REFER to: Electronic Engine Controls (303-14 Electronic Engine Controls, Diagnosis and Testing). For evaporative emissions components, REFER to: Evaporative Emissions (303-13 Evaporative Emissions, Description and Operation). Check fuel pressure. For ignition system tests, refer to pinpoint tests in this section. For ECT sensor tests, REFER to: Electronic Engine Controls (303-14 Electronic Engine Controls, Diagnosis and Testing).
Difficult to start after hot soak (vehicle standing after engine has reached operating temperature)	• Injector leak • Fuel temperature sensor • IAT sensor • MAF sensor • Purge valve • Fuel pump • Ignition system • Coolant temperature sensor • EGR valve stuck open	For fuel injectors, REFER to: Fuel Charging and Controls (303-04 Fuel Charging and Controls, Diagnosis and Testing). For fuel temperature sensor, IAT sensor and MAF sensor tests, REFER to: Electronic Engine Controls (303-14 Electronic Engine Controls, Diagnosis and Testing). For evaporative emissions components, REFER to: Evaporative Emissions (303-13 Evaporative Emissions, Description and Operation). Check fuel pressure. For ignition system tests, refer to pinpoint tests in this section. For ECT sensor tests, REFER to: Electronic Engine Controls (303-14 Electronic Engine Controls, Diagnosis and Testing). For EGR information, REFER to: Engine Emission Control (303-08 Engine Emission Control, Description and Operation).
Engine stalls soon after start	• Breather system disconnected/restricted • ECM relay • Harness • MAF sensor • Coolant temperature sensor • Ignition system • Air filter restricted • Fuel lines • Fuel pressure sensor • Air leakage	For breather system, REFER to: Engine Emission Control (303-08 Engine Emission Control, Description and Operation). For ECM relay, MAF sensor and ECT sensor tests, REFER to: Electronic Engine Controls (303-14 Electronic Engine Controls, Diagnosis and Testing). For ignition system tests, refer to pinpoint tests in this section. For air filter information, REFER to: Intake Air Distribution and Filtering (303-12 Intake Air Distribution and Filtering, Description and Operation). For fuel line information, REFER to: Fuel Tank and Lines (310-01 Fuel Tank and Lines, Description and Operation). For fuel pressure sensor tests, REFER to: Fuel Charging and Controls (303-04 Fuel Charging and Controls, Diagnosis and Testing). For intake system information, REFER to: Intake Air Distribution and Filtering (303-12 Intake Air Distribution and Filtering, Description and Operation).
Engine hesitates/poor acceleration	• Fuel pump • Injector leak • Fuel pressure • Fuel lines • Air leakage • Throttle sensors • Throttle motor • Ignition system • Exhaust gas recirculation • Oxygen sensors • Transmission malfunction • Restricted pedal travel (carpet, etc) • APP sensor	Check fuel pressure. For fuel pressure sensor tests, REFER to: Fuel Charging and Controls (303-04 Fuel Charging and Controls, Diagnosis and Testing). For fuel line information, REFER to: Fuel Tank and Lines (310-01 Fuel Tank and Lines, Description and Operation). For intake system, REFER to: Intake Air Distribution and Filtering (303-12 Intake Air Distribution and Filtering, Description and Operation). For throttle position sensor and throttle motor tests, REFER to: Electronic Engine Controls (303-14 Electronic Engine Controls, Diagnosis and Testing). For ignition system tests, refer to pinpoint tests in this section, For exhaust gas recirculation, REFER to: Engine Emission Control (303-08 Engine Emission Control, Description and Operation). Check for DTCs relating to Oxygen sensors. Refer to the DTC index for pinpoint tests for DTC set. For transmission information, REFER to: Transmission Description (307-01 Automatic Transmission/Transaxle, Description and Operation). Check accelerator pedal travel. For APP sensor tests, REFER to: Electronic Engine Controls (303-14 Electronic Engine Controls, Diagnosis and Testing).
Engine backfires	• Fuel pump • Fuel lines • Air leakage • MAF sensor • Oxygen sensors • Ignition system • Sticking VCT hub • APP sensor	Check fuel pressure. For fuel line information, REFER to: Fuel Charging and Controls (303-04 Fuel Charging and Controls, Diagnosis and Testing). For intake system, REFER to: Intake Air Distribution and Filtering (303-12 Intake Air Distribution and Filtering, Description and Operation). For MAF sensor tests, REFER to: Electronic Engine Controls (303-14 Electronic Engine Controls, Diagnosis and Testing). Check for DTCs relating to Oxygen sensors. Refer to the DTC index for pinpoint tests for DTC set. For ignition system

Symptom	Possible source	Action
		tests, refer to pinpoint tests in this section. For VCT information, REFER to: Engine (303-01 Engine, Description and Operation). For APP sensor tests, REFER to: Electronic Engine Controls (303-14 Electronic Engine Controls, Diagnosis and Testing).
Engine surges	• Fuel pump • Fuel lines • MAF sensor • Harness • Throttle sensors • Throttle motor • Ignition system	Check fuel pressure. For fuel line information, REFER to: Fuel Charging and Controls (303-04 Fuel Charging and Controls, Diagnosis and Testing). For MAF sensor, throttle sensor, and throttle motor relay tests, REFER to: Electronic Engine Controls (303-14 Electronic Engine Controls, Diagnosis and Testing). For ignition system tests, refer to pinpoint tests in this section.
Engine detonates/knocks	• KS/circuit malfunction • Fuel pump • Fuel lines • Fuel pressure sensor • MAF sensor • Oxygen sensors • Air leakage • Sticking VCT hub • BARO sensor malfunction	For KS circuit tests, REFER to: Electronic Engine Controls (303-14 Electronic Engine Controls, Diagnosis and Testing). Check fuel pressure. For fuel line information, REFER to: Fuel Charging and Controls (303-04 Fuel Charging and Controls, Diagnosis and Testing). For fuel pressure sensor tests, REFER to: Fuel Charging and Controls (303-04 Fuel Charging and Controls, Diagnosis and Testing). For MAF sensor and oxygen sensor tests, REFER to: Electronic Engine Controls (303-14 Electronic Engine Controls, Diagnosis and Testing). For intake system, REFER to: Intake Air Distribution and Filtering (303-12 Intake Air Distribution and Filtering, Description and Operation). Check DTCs for VCT range/performance fault. For VCT information, REFER to: Engine (303-01 Engine, Diagnosis and Testing). For BARO sensor, contact Dealer technical support for advice on possible ECM failure
No throttle response	• APP sensor malfunction • Throttle sensors • Throttle motor	For APP sensor, throttle position sensor and throttle motor relay tests, REFER to: Electronic Engine Controls (303-14 Electronic Engine Controls, Diagnosis and Testing).
Poor throttle response	• APP sensor malfunction • Throttle sensors • Coolant temperature sensor • MAF sensor • Transmission malfunction • Traction control event • Air leakage • Breather system disconnected/restricted	For APP sensor, throttle position sensor, ECT sensor and MAF sensor tests, REFER to: Electronic Engine Controls (303-14 Electronic Engine Controls, Diagnosis and Testing). For transmission information, REFER to: Transmission Description (307-01 Automatic Transmission/Transaxle, Description and Operation). For intake system, REFER to: Intake Air Distribution and Filtering (303-12 Intake Air Distribution and Filtering, Description and Operation). For breather system information, REFER to: Engine Emission Control (303-08 Engine Emission Control, Description and Operation).

Driver Information Chart

• NOTE: Use this table to identify DTCs associated with the message center display, then refer to the DTC index for possible sources and actions.

• NOTE: For definitions of Default Modes, see the foot of this table.

Warning light	Message	Default Mode	DTC
Red	Engine systems fault	Engine shut-down (all cylinders fuel cut)	P1224
Red	Engine systems fault	Limp-Home	P1229
Red	Engine systems fault	Limp-Home	P0121, P0122, P0123, P0222, P0223
Red	Engine systems fault	Limp-Home	P1251, P1631
Red	Engine systems fault	Limp-Home	P1611
Red	Engine systems fault	Limp-Home	P1633
Red	Engine systems fault	High idle	P1344, P1122, P1123, P1215, P1216
Red	Restricted Performance	Limp-Home unavailable	P1254
Amber	Restricted Performance	Limp-Home unavailable	P1250
Red	Restricted Performance	Safety redundancy	P1657, P1658
Red	Restricted Performance	Safety redundancy	P16634
Amber	Cruise not available	MAF (runs normally, limited to 3000 RPM)	P0101, P0102, P0103, P0104
Amber	Cruise not available	None	P1571
Amber	Cruise not available	None	P0568
Amber	Cruise not available	None	P0567
Amber	Cruise not available	None	P0570
Amber	Cruise not available	None	P0569
Amber	Cruise not available	None	P0566
Amber	Cruise not available	None	P1697
Amber	Cruise not available	None	P1696
Amber	Restricted Performance	Engine speed limited	P0116, P0117, P0118, P0125
Amber	Restricted Performance	Engine speed limited	P0101, P0102, P0103, P0104
Amber	Restricted Performance	Engine speed limited	P0300, P0301, p0302, P0303, P0304, P0305, P0306, P0307, P0308, P1313, P1314
Amber	Restricted Performance	Engine speed limited	P0327, P0328, P0332, P0333, P1648

Warning light	Message	Default Mode	DTC
Amber	Restricted Performance	Engine speed limited	P0351, P0352, P0353, P0354, P0355, P0356, P0357, P0358, P1367, P1368
Amber	Restricted Performance	Engine speed limited	P0171, P0172, P0174, P0175
Amber	Restricted Performance	Engine speed limited	
Amber	Restricted Performance	Engine speed limited	P0201, P0202, P0203, P0204, P0205, P0206, P0207, P0208
Amber	Restricted Performance	Engine speed limited	P0335, P0336
Amber	Restricted Performance	Engine speed limited, Reverse throttle progression enabled	P1642
Amber	Restricted Performance	Engine speed limited, Reverse throttle progression enabled	P1643
Amber	Restricted Performance	Engine speed limited, Reverse throttle progression enabled	P0096, P0097, P0098
Amber	Restricted Performance	Engine speed limited, Reverse throttle progression enabled	P1474
Amber	Restricted Performance	Engine speed limited	P1234, P1236, P1338
Amber	None	None	P0506, P0507
Amber	None	None	P1656
Amber	Gearbox fault/Restricted performance	Gearbox default to set gear	P0725
Amber	Gearbox fault/Restricted performance	Gearbox default to set gear	P1796
Amber	Gearbox fault/Restricted performance	Gearbox default to set gear	P0701
Amber	Gearbox fault/Restricted performance	Gearbox default to set gear	P1603
Amber	Gearbox fault/Restricted performance	Gearbox default to set gear	P0605
Amber	Gearbox fault/Restricted performance	Gearbox default to set gear	P1719
Amber	Gearbox fault/Restricted performance	Gearbox default to set gear	P0720
Amber	Gearbox fault/Restricted performance	Gearbox default to set gear	P0715
Amber	Gearbox fault/Restricted performance	Gearbox default to set gear	P0705
Amber	Gearbox fault/Restricted performance	Gearbox default to set gear	P0610
Amber	Gearbox fault/Restricted performance	Gearbox default to set gear	P0606
Amber	Gearbox fault/Restricted performance	Gearbox default to set gear	P0750
Amber	Gearbox fault/Restricted performance	Gearbox default to set gear	P0753
Amber	Gearbox fault/Restricted performance	Gearbox default to set gear	P0755
Amber	Gearbox fault/Restricted performance	Gearbox default to set gear	P0758
Amber	Gearbox fault/Restricted performance	Gearbox default to set gear	P0760
Amber	Gearbox fault/Restricted performance	Gearbox default to set gear	P0763
Amber	Gearbox fault/Restricted performance	Gearbox default to set gear	P0765
Amber	Gearbox fault/Restricted performance	Gearbox default to set gear	P0768
Amber	Gearbox fault/Restricted performance	Gearbox default to set gear	P0770
Amber	Gearbox fault/Restricted performance	Gearbox default to set gear	P0773
Amber	Gearbox fault/Restricted performance	Gearbox default to set gear	P0740
Amber	Gearbox fault/Restricted performance	Gearbox default to set gear	P0743
Amber	Gearbox fault/Restricted performance	Gearbox default to set gear	P0787
Amber	Gearbox fault/Restricted performance	Gearbox default to set gear	P0788
Amber	Gearbox fault/Restricted performance	Gearbox default to set gear	P0730
Amber	Gearbox fault/Restricted performance	Gearbox default to set gear	P0731
Amber	Gearbox fault/Restricted performance	Gearbox default to set gear	P0732
Amber	Gearbox fault/Restricted performance	Gearbox default to set gear	P0733
Amber	Gearbox fault/Restricted performance	Gearbox default to set gear	P0734
Amber	Gearbox fault/Restricted performance	Gearbox default to set gear	P0735
Amber	Gearbox fault/Restricted performance	Gearbox default to set gear	P0729
Amber	Gearbox fault/Restricted performance	Gearbox default to set gear	P0781
Amber	Gearbox fault/Restricted performance	Gearbox default to set gear	P0782

Warning light	Message	Default Mode	DTC
Amber	Gearbox fault/Restricted performance	Gearbox default to set gear	P0783
Amber	Gearbox fault/Restricted performance	Gearbox default to set gear	P0784
Amber	Gearbox fault/Restricted performance	Gearbox default to set gear	P0829
Amber	Gearbox fault/Restricted performance	Engine speed limited, reverse throttle progression enabled	P1797
Amber	Gearbox fault/Restricted performance	Gearbox default to set gear	P0641
Amber	Gearbox fault/Restricted performance	Gearbox default to set gear	P0651
Amber	Gearbox fault/Restricted performance	Gearbox default to set gear	P0860
Amber	Gearbox fault/Restricted performance	Limp-home	P1783

Default mode Definitions

LIMP-HOME MODE

- Throttle motor off
- Throttle motor relay off
- Throttle motor circuit off
- Fuel intervention
- Cruise control inhibited

LIMP-HOME UNAVAILABLE

- Power limitation
- Vehicle speed limited to 120 kph
- Reverse throttle progression enabled
- Cruise Control Inhibited

REVERSE THROTTLE PROGRESSION

- Throttle opening limited to maximum 30%

• NOTE: The throttle operation uses the same map as for reverse gear.

ENGINE SPEED LIMITED

- Engine runs normally, up to 3000 RPM
- Engine speed restricted to 3000 RPM maximum, by fuel cut-off

HIGH IDLE

- Throttle valve kept in fixed position by motor
- Cruise Control Inhibited

SAFETY REDUNDANCY

- Power limitation
- Vehicle speed limited to 120 kph
- Reverse throttle progression enabled
- Cruise Control Inhibited

Diagnostic Trouble Code (DTC) Index

DTC	Description	Possible Source	Action
P0300	Random misfire detected	• ECM to ignition coil primary circuit fault (cylinder misfire detected DTC also flagged) • Fuel injector circuit fault(s) (injector DTCs also flagged) • Ignition coil failure • Spark plug failure/fouled/incorrect gap • Cylinder compression low • Fuel delivery pressure (low/high) • Fuel injectors restricted/leaking • Fuel injectors continuously open • Fuel contamination • Worn camshaft/broken valve springs	For ignition coil circuit tests, GO to Pinpoint Test A. For fuel system, REFER to: Fuel Charging and Controls (303-04 Fuel Charging and Controls, Diagnosis and Testing). Check spark plug condition/gap, REFER to: Specifications (303-07 Engine Ignition, Specifications). For spark plug test, GO to Pinpoint Test B. For engine information, REFER to: Engine (303-00 Engine System - General Information, Description and Operation).
P0301	Misfire detected, Cyl 1	• ECM to ignition coil primary circuit fault (cylinder misfire detected DTC also flagged) • Fuel injector circuit fault(s) (injector DTCs also flagged) • Ignition coil failure • Spark plug failure/fouled/incorrect gap • Cylinder compression low • Fuel delivery pressure (low/high) • Fuel injectors restricted/leaking • Fuel injectors continuously open • Fuel contamination • Worn camshaft/broken valve springs	For ignition coil circuit tests, GO to Pinpoint Test A. For fuel system, REFER to: Fuel Charging and Controls (303-04 Fuel Charging and Controls, Diagnosis and Testing). Check spark plug condition/gap, REFER to: Specifications (303-07 Engine Ignition, Specifications). GO to Pinpoint Test B. For engine information, REFER to: Engine (303-00 Engine System - General Information, Description and Operation).
P0302	Misfire detected, Cyl 3		
P0303	Misfire detected, Cyl 5		
P0304	Misfire detected, Cyl 7		
P0305	Misfire detected, Cyl 2		
P0306	Misfire detected, Cyl 4		
P0307	Misfire detected, Cyl 6		
P0308	Misfire detected, Cyl 8		

DTC	Description	Possible Source	Action
P0351	Ignition coil primary/secondary circuit malfunction, cyl 1	• ECM to ignition coil primary circuit open circuit, short circuit to ground, high resistance • Ignition coil ground circuit open circuit, high resistance • Ignition coil failure • * Early production vehicles only, ignition coil relay	For ignition coil circuit tests, GO to Pinpoint Test A.
P0352	Ignition coil primary/secondary circuit malfunction, cyl 3		
P0353	Ignition coil primary/secondary circuit malfunction, cyl 5		
P0354	Ignition coil primary/secondary circuit malfunction, cyl 7		
P0355	Ignition coil primary/secondary circuit malfunction, cyl 2		
P0356	Ignition coil primary/secondary circuit malfunction, cyl 4		
P0357	Ignition coil primary/secondary circuit malfunction, cyl 6		
P0358	Ignition coil primary/secondary circuit malfunction, cyl 8		
P0603	ECM data corrupted	• ECM	Contact Dealer technical support for advice on possible ECM failure.
P1000	System checks not complete since last memory clear	OBD monitors have not completed	Carry out comprehensive component monitor drive cycle. Refer to the DTC section of JTIS, accessed by the icon on the opening page.
P1111	System checks complete since last memory clear	OBD monitors have completed	No action necessary
P1313	Misfire rate catalyst damage, Right-Hand bank. NOTE. This DTC will flag only when accompanied by a random or individual cylinder misfire DTC; P0300, P0301 to P0304	Refer to P0300 possible sources	Refer to P0300 Actions
P1314	Misfire rate catalyst damage, Left-Hand bank. NOTE. This DTC will flag only when accompanied by a random or individual cylinder misfire DTC; P0300 to P0308		
P1316	Misfire excess emission. NOTE. This DTC will flag only when accompanied by an individual cylinder misfire DTC; P0300 to P0308		
P1367	Ignition monitor (Right-Hand bank)	• Ignition monitoring circuit between splice and ECM open circuit, short circuit to ground, or short circuit to B+ voltage • Ignition coil group ground circuit fault • Ignition coil relay failure	For coil circuit tests, GO to Pinpoint Test A.
P1368	Ignition monitor (Left-Hand bank)	• Ignition monitoring circuit between splice and ECM open circuit, short circuit to ground, or short circuit to B+ voltage • Ignition coil group ground circuit fault • Ignition coil relay failure	For coil circuit tests, GO to Pinpoint Test A.

Pinpoint Tests

PINPOINT TEST A : DTC P0300, P0301-0308, P0351-0358; RANDOM MISFIRE DETECTED, MISFIRE DETECTED, (CYLINDERS 1-8) IGNITION COIL PRIMARY CIRCUIT MALFUNCTION, (CYLINDERS 1-8)

• NOTE: Unless multiple cylinder misfires are apparent, only one circuit will normally need to be tested. The DTC set will indicate which cylinder is misfiring.

• NOTE: Early production vehicles may be fitted with an ignition coil relay, which was deleted for later vehicles.

TEST CONDITIONS	DETAILS/RESULTS/ACTIONS
A1: CHECK COIL FUNCTION BY SUBSTITUTION	
	1 Swap the suspect coil for a known good unit.
	2 CLEAR the DTC. TEST the system for normal operation.
	Does the same DTC reoccur? The DTC will indicate if the same cylinder is misfiring. **Yes** INSTALL a new coil. CLEAR the DTC. TEST the system for normal operation. **No** GO to A2.
A2: CHECK THE IGNITION COIL SUPPLY VOLTAGE CIRCUIT	
	1 Disconnect the relevant ignition coil electrical connector(s).
	2 Turn the ignition switch to the ON position.
	3 Make sure the ignition coil relay is energised, where fitted.
	4 Measure the voltage between: • Cyl 1 PI51, pin 1 (RW) and GROUND. • Cyl 2 PI55, pin 1 (RW) and GROUND. • Cyl 3 PI52, pin 1 (RW) and GROUND. • Cyl 4 PI56, pin 1 (RW) and GROUND. • Cyl 5 PI53, pin 1 (RW) and GROUND. • Cyl 6 PI57, pin 1 (RW) and GROUND. • Cyl 7 PI54, pin 1 (RW) and GROUND. • Cyl 8 PI58, pin 1 (RW) and GROUND.
	Is the voltage less than 10.5 Volts? **Yes** REPAIR the relevant ignition coil supply voltage circuit. This circuit may include the ignition coil relay, and the engine bay fuse box (fuse 5). For additional information, refer to the wiring diagrams. CLEAR the DTCs. TEST the system for normal operation. **No** GO to A3.

A3: CHECK THE IGNITION COIL GROUND CIRCUIT	
	1 Turn the ignition switch to the OFF position.
	2 Disconnect the relevant ignition coil electrical connector(s).
	3 Measure the resistance between: • Cyl 1 PI51, pin 3 (B) and GROUND. • Cyl 2 PI55, pin 3 (B) and GROUND. • Cyl 3 PI52, pin 3 (B) and GROUND. • Cyl 4 PI56, pin 3 (B) and GROUND. • Cyl 5 PI53, pin 3 (B) and GROUND. • Cyl 6 PI57, pin 3 (B) and GROUND. • Cyl 7 PI54, pin 3 (B) and GROUND. • Cyl 8 PI58, pin 3 (B) and GROUND.
	Is the resistance greater than 5 ohms? **Yes** REPAIR the high resistance circuit. For additional information, refer to the wiring diagrams. CLEAR the DTCs. TEST the system for normal operation. **No** GO to A4.
A4: CHECK THE IGNITION COIL SWITCHING CIRCUITS FOR HIGH RESISTANCE	
	1 Disconnect the battery negative terminal.
	2 Disconnect the ECM electrical connector, EM80.
	3 Disconnect the relevant ignition coil electrical connector(s).
	4 Measure the resistance between; • Cyl 1 PI51, pin 4 (GU) and EM80, pin 87 (GU). • Cyl 2 PI55, pin 4 (GB) and EM80, pin 61 (GB). • Cyl 3 PI52, pin 4 (GR) and EM80, pin 88 (GR). • Cyl 4 PI56, pin 4 (GW) and EM80, pin 62 (GW). • Cyl 5 PI53, pin 4 (GO) and EM80, pin 89 (GO). • Cyl 6 PI57, pin 4 (GK) and EM80, pin 63 (GK). • Cyl 7 PI54, pin 4 (GW) and EM80, pin 90 (GW). • Cyl 8 PI58, pin 4 (GU) and EM80, pin 64 (GU).
	Is the resistance greater than 5 ohms? **Yes** REPAIR the high resistance circuit. For additional information, refer to the wiring diagrams. CLEAR the DTCs. TEST the system for normal operation. **No** GO to A5.
A5: CHECK THE IGNITION COIL (CYLS 1, 4, 6, AND 7) MONITOR CIRCUITS FOR HIGH RESISTANCE	
	1 Disconnect the relevant ignition coil electrical connector(s).
	2 Measure the resistance between; • Cyl 1 PI51, pin 2 (YG) and EM80, pin 131 (YG). • Cyl 4 PI56, pin 2 (YG) and EM80, pin 131 (YG). • Cyl 6 PI57, pin 2 (YG) and EM80, pin 131 (YG). • Cyl 7 PI54, pin 2 (YG) and EM80, pin 131 (YG).
	Is the resistance greater than 5 ohms? **Yes** REPAIR the high resistance circuit. This circuit includes the harness splice, PIS11. For additional information, refer to the wiring diagrams. CLEAR the DTCs. TEST the system for normal operation. **No** GO to A6.
A6: CHECK THE IGNITION COIL (CYLS 1, 4, 6, AND 7) MONITOR CIRCUITS FOR SHORT TO B+ VOLTAGE	
	1 Reconnect the battery negative terminal.
	2 Disconnect the relevant ignition coil electrical connector(s).
	3 Measure the voltage between; • Cyl 1 PI51, pin 2 (YG) and GROUND. • Cyl 4 PI56, pin 2 (YG) and GROUND. • Cyl 6 PI57, pin 2 (YG) and GROUND. • Cyl 7 PI54, pin 2 (YG) and GROUND.
	Is the voltage greater than 3 volts? **Yes** REPAIR the short to B+ voltage. For additional information, refer to the wiring diagrams. CLEAR the DTCs. TEST the system for normal operation. **No** GO to A7.
A7: CHECK THE IGNITION COIL (CYLS 1, 4, 6, AND 7) MONITOR CIRCUITS FOR SHORT TO GROUND	
	1 Disconnect the relevant ignition coil electrical connector(s).
	2 Measure the resistance between; • Cyl 1 PI51, pin 2 (YG) and GROUND. • Cyl 4 PI56, pin 2 (YG) and GROUND. • Cyl 6 PI57, pin 2 (YG) and GROUND. • Cyl 7 PI54, pin 2 (YG) and GROUND.
	Is the resistance less than 10,000 ohms? **Yes** REPAIR the short to GROUND. For additional information, refer to the wiring diagrams. CLEAR the DTCs. TEST the system for normal operation. **No** GO to A8.
A8: CHECK THE IGNITION COIL (CYLS 2, 3, 5, AND 8) MONITOR CIRCUITS FOR HIGH RESISTANCE	
	1 Disconnect the relevant ignition coil electrical connector(s).

	2 Measure the resistance between; • Cyl 2 PI55, pin 2 (YG) and EM80, pin 132 (YG). • Cyl 3 PI52, pin 2 (YG) and EM80, pin 132 (YG). • Cyl 5 PI53, pin 2 (YG) and EM80, pin 132 (YG). • Cyl 8 PI58, pin 2 (YG) and EM80, pin 132 (YG).
	Is the resistance greater than 5 ohms? **Yes** REPAIR the high resistance circuit. This circuit includes the harness splice, PIS12. For additional information, refer to the wiring diagrams. CLEAR the DTCs. TEST the system for normal operation. **No** GO to A9.
A9: CHECK THE IGNITION COIL (CYLS 2, 3, 5, AND 8) MONITOR CIRCUITS FOR SHORT TO B+ VOLTAGE	
	1 Reconnect the battery negative terminal.
	2 Disconnect the relevant ignition coil electrical connector(s).
	3 Measure the voltage between; • Cyl 2 PI55, pin 2 (YG) and GROUND. • Cyl 3 PI52, pin 2 (YG) and GROUND. • Cyl 5 PI53, pin 2 (YG) and GROUND. • Cyl 7 PI58, pin 2 (YG) and GROUND.
	Is the voltage greater than 3 volts? **Yes** REPAIR the short to B+ voltage. For additional information, refer to the wiring diagrams. CLEAR the DTCs. TEST the system for normal operation. **No** GO to A10.
A10: CHECK THE IGNITION COIL (CYLS 2, 3, 5, AND 8) MONITOR CIRCUITS FOR SHORT TO GROUND	
	1 Disconnect the relevant ignition coil electrical connector(s).
	2 Measure the resistance between; • Cyl 2 PI55, pin 2 (YG) and GROUND. • Cyl 3 PI52, pin 2 (YG) and GROUND. • Cyl 5 PI53, pin 2 (YG) and GROUND. • Cyl 7 PI58, pin 2 (YG) and GROUND.
	Is the resistance less than 10,000 ohms? **Yes** REPAIR the short to GROUND. For additional information, refer to the wiring diagrams. CLEAR the DTCs. TEST the system for normal operation. **No** Contact Dealer technical support for advice on possible ECM failure.

PINPOINT TEST B : CHECK SPARK PLUG	
• NOTE: Only resisted spark plugs must be used.	
TEST CONDITIONS	**DETAILS/RESULTS/ACTIONS**
B1: CHECK SPARK PLUG	
• NOTE: Some spark plug types cannot be regapped and must be replaced.	
	1 Remove the suspect spark plug(s). REFER to: Ignition Coil-On-Plug RH (303-07 Engine Ignition, Removal and Installation).
	2 Visually inspect the spark plug for cracks, damage, carbon buildup or wet fouling, check the condition of the ground electrode, the center electrode tip and the spark plug HT contact and confirm that the spark plug gap is correctly set using a wire gauge taking care not to cause damage to the center or ground electrode tips. REFER to: Specifications (303-07 Engine Ignition, Specifications).
	Is the spark plug condition good, and the spark plug gap correct ? **Yes** Check ignition coil and circuits. See possible sources list for misfire. **No** Install a new spark plug(s) as required. REFER to: Specifications (303-07 Engine Ignition, Specifications) / Ignition Coil-On-Plug RH (303-07 Engine Ignition, Removal and Installation). . CLEAR the DTC. TEST the system for normal operation.

Engine Ignition - Ignition Coil-On-Plug RH

Removal and Installation

Removal

Vehicles without supercharger

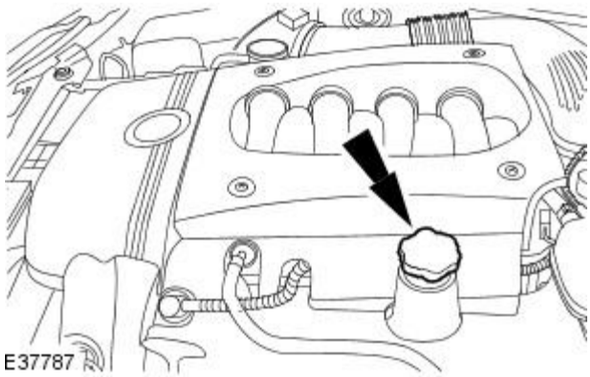

1. Remove the oil filler cap.

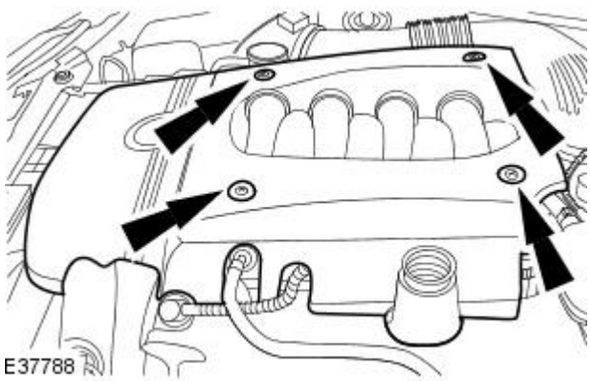

2. Remove the engine cover.

All vehicles

3. Remove the air cleaner element.
For additional information, refer to Section 303-12 Intake Air Distribution and Filtering.

4. Remove the ignition coil-on-plug cover.

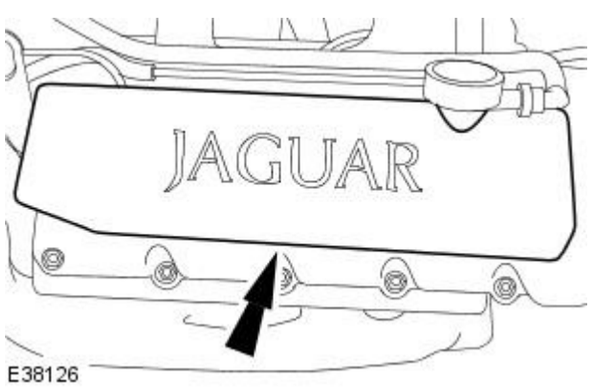

5. Disconnect the ignition coil-on-plug electrical connector.

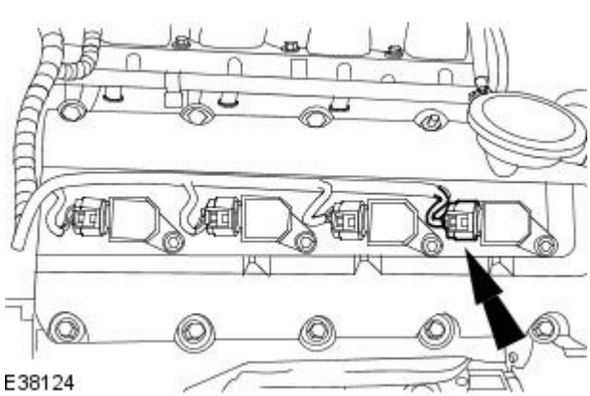

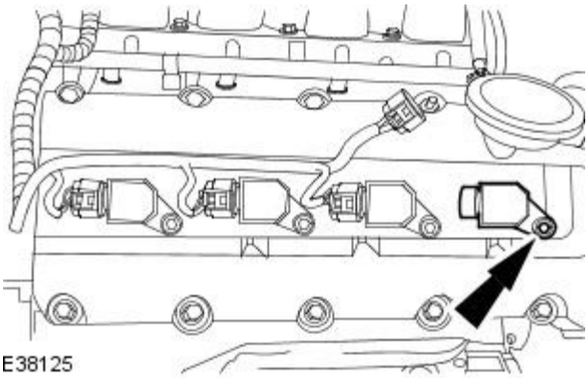

6. Remove the ignition coil-on-plug.

Installation

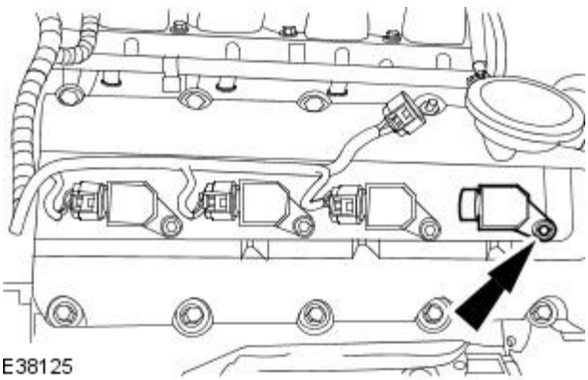

1. To install, reverse the removal procedure.

- Tighten to 5 Nm.

Published: 11-May-2011

Engine Emission Control -

Torque Specifications

Description	Nm	lb-ft	lb-in
Exhaust gas recirculation (EGR) valve retaining bolts	10	7	-
EGR valve tube to EGR valve retaining bolts	21	15	-
Exhaust manifold to EGR valve tube retaining nuts	21	15	-
Catalytic converter heat shield retaining bracket retaining nuts.	20	15	-
Exhaust manifold to EGR valve tube heat shield retaining nut.	20	15	-
Exhaust manifold to EGR valve tube heat shield retaining bolt.	9	-	80

Engine Emission Control - Engine Emission Control

Description and Operation

Positive Crankcase Ventilation System

The positive crankcase ventilation (PCV) system consists of a PCV valve, and two PCV hoses. The PCV valve is retained on the right-hand valve cover and a hose is connected between PCV valve and the throttle body elbow. The PCV valve regulates the amount of ventilation air and crankcase gas supplied to the intake manifold and also prevents backfiring into the crankcase. The left-hand valve cover PCV hose is connected to the air cleaner outlet pipe.

The PCV system recycles crankcase gases back through the engine where they mix with incoming air/fuel charge.

The positive crankcase ventilation system helps to reduce hydrocarbon emissions from the engine.

Exhaust Gas Recirculation System

Exhaust Gas Recirculation (EGR) Valve

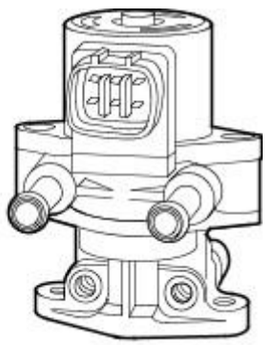

E30253

Exhaust Manifold to Exhaust Gas Recirculation (EGR) Valve Tube

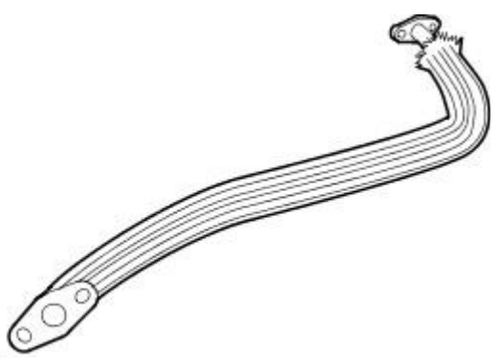

E30254

The exhaust gas recirculation (EGR) system is fitted on all vehicles. It comprises of an EGR valve and exhaust manifold to EGR valve tube. The EGR system allows a measured quantity of exhaust gas to be directed back to the intake manifold. The exhaust gas is introduced to the incoming charge in the intake manifold, where it mixes with the air/fuel mixture and lowers the peak gas temperature, reducing nitrogen oxide (NOX) exhaust emissions. The gas is drawn through the exhaust manifold to EGR valve tube from the exhaust to the inlet manifold via the EGR valve. The EGR valve is electrically operated and is controlled via an input from the engine control module (ECM).

The EGR valve is retained on the throttle body elbow.

The ECM can monitor the operation of the EGR system by receiving inputs from the manifold absolute pressure (MAP) sensor. The MAP sensor monitors the EGR flow by the change in intake manifold pressure when the EGR valve is operated. If at any time the input signal to the ECM exceeds pre-defined thresholds due to low pressure reading for a calibrated period of time, a diagnostic trouble code (DTC) is recorded.

The MAP sensor is retained on the side of the throttle body elbow.
For additional information, refer to Section 303-14 Electronic Engine Controls.

Engine Emission Control - Engine Emission Control

Diagnosis and Testing

Inspection and Verification

1. **1.** Verify the customer concern.
2. **2.** Visually inspect for obvious signs of mechanical or electrical damage.

Visual Inspection Chart

Mechanical	Electrical
• Engine oil level • Cooling system coolant level • Fuel level • Fuel Contamination/grade/quality • Throttle body • Poly-vee belt • Engine breather system pipework/connections • PCV valve condition • EGR pipework condition. (cracking, etc)	• Fuses. • Wiring harness • Electrical connector(s) • Sensor(s) • Engine control module (ECM)

3. **3.** Verify the following systems are working correctly:

- Air intake system
- Cooling system
- Charging system
- Fuel charging system
- Ignition system

4. **4.** If an obvious cause for an observed or reported concern is found, correct the cause (if possible) before proceeding to the next step
5. **5.** Where the Jaguar approved diagnostic system is available, complete the S93 report before clearing any or all fault codes from the vehicle.

• NOTE: If a DTC cannot be cleared, then there is a permanent fault present that flags again as soon as it is cleared. (The exception to this is P1260, which will only clear following an ignition OFF/ON cycle after rectification.)

6. **6.** If the cause is not visually evident and the Jaguar Approved Diagnostic System is not available, use a fault code reader to retrieve the fault codes before proceeding to the Diagnostic Trouble Code (DTC) Index Chart, or the Symptom Chart if no DTCs are set.
7. **7.** Using the Jaguar approved diagnostic system where available, and a scan tool where not, check the freeze frame data for information on the conditions applicable when the fault was flagged. The format of this will vary, depending on the tool used, but can provide information useful to the technician in diagnosing the fault.

CAUTION: When probing connectors to take measurements in the course of the pinpoint tests, use the adaptor kit, part number 3548-1358-00.

• NOTE: When performing electrical voltage or resistance tests, always use a digital multimeter (DMM) accurate to 3 decimal places, and with an up-to-date calibration certificate. When testing resistance, always take the resistance of the DMM leads into account.

• NOTE: Check and rectify basic faults before beginning diagnostic routines involving pinpoint tests.

Symptom Chart

Symptom (general)	Symptom (specific)	Possible source	Action
Non-Start	Engine cranks, but does not fire	• Engine breather system disconnected/restricted • Spark plugs • Check for water ingress into spark plug wells • HT short to ground (tracking) check rubber boots for cracks/damage • Ignition coil failure(s) • Fuel system • Harness • CKP sensor • ECM fault	Check engine breather system, see Visual inspection table in this section. For ignition system, REFER to Section 303-07 Engine Ignition. For fuel system, REFER to Section 303-04 Fuel Charging and Controls. For CKP sensor tests, REFER to Section 303-14 Electronic Engine Controls. Contact Dealer technical support for advice on possible ECM failure.
	Engine cranks and fires, but will not start	• Purge valve • Fuel pump • Coolant temperature sensor • Spark plugs • Check for water ingress into spark plug wells • HT short to ground (tracking) check rubber boots for cracks/damage • Ignition coil failure(s)	For evaporative emissions components, REFER to Section 303-13 Evaporative Emissions. Check fuel pressure. For ECT sensor tests, REFER to Section 303-14 Electronic Engine Controls. For ignition system, REFER to Section 303-07 Engine Ignition.
Difficult to start	Difficult to start cold	• Battery • Check coolant anti-freeze content • CKP sensor • EGR valve stuck open • Fuel pump • Engine coolant temperature (ECT) sensor • Purge valve	For battery information, REFER to Section 414-01 Battery, Mounting and Cables. For CKP sensor tests, REFER to Section 303-14 Electronic Engine Controls. Check EGR valve. For EGR valve circuit tests, GO to Pinpoint Test A. Check fuel pressure. For ECT sensor tests,

Symptom (general)	Symptom (specific)	Possible source	Action
			REFER to Section 303-14 Electronic Engine Controls. For evaporative emissions components, REFER to Section 303-13 Evaporative Emissions.
	Difficult to start hot	• Injector leak • Fuel temperature sensor • IAT sensor • MAF sensor • Engine coolant temperature (ECT) sensor • Purge valve • Fuel pump • Spark plugs • Check for water ingress into spark plug wells • HT short to ground (tracking) check rubber boots for cracks/damage • Ignition coil failure(s) • EGR valve stuck open	For fuel system, REFER to Section 303-04 Fuel Charging and Controls. For IAT sensor, MAF sensor, ECT sensor tests, REFER to Section 303-14 Electronic Engine Controls. For evaporative emissions components, REFER to Section 303-13 Evaporative Emissions. Check fuel pressure. For ignition system, REFER to Section 303-07 Engine Ignition. Check EGR valve. For EGR valve circuit tests, GO to Pinpoint Test A.
	Difficult to start after hot soak (vehicle standing after engine has reached operating temperature)	• Injector leak • Fuel temperature sensor • IAT sensor • MAF sensor • Engine coolant temperature (ECT) sensor • Purge valve • Fuel pump • Spark plugs • Check for water ingress into spark plug wells • HT short to ground (tracking) check rubber boots for cracks/damage • Ignition coil failure(s) • EGR valve stuck open	
Engine stalls	Engine stalls soon after start	• Engine breather system disconnected/restricted • ECM relay • Harness • MAF sensor • Engine coolant temperature (ECT) sensor • Spark plugs • Check for water ingress into spark plug wells • HT short to ground (tracking) check rubber boots for cracks/damage • Ignition coil failure(s) • Air filter restricted • Fuel lines • Fuel pressure sensor • Air leakage	Check breather system pipework and connections, see visual inspection table. For ECM relay tests, MAF sensor tests, ECT sensor tests, REFER to Section 303-14 Electronic Engine Controls. For ignition system , REFER to Section 303-07 Engine Ignition. For fuel lines, REFER to Section 310-01 Fuel Tank and Lines. For fuel pressure sensor tests, REFER to Section 303-14 Electronic Engine Controls. For intake system information, restriction/leaking, REFER to Section 303-12 Intake Air Distribution and Filtering.
	Engine stalls on overrun	• ECM relay • Throttle sensors	For ECM relay tests, throttle sensor tests, REFER to Section 303-14 Electronic Engine Controls. For fuel system, REFER to Section 303-04 Fuel Charging and Controls.
	Engine stalls at steady speed	• ECM relay • CKP sensor • Throttle sensors	For ECM relay tests, REFER to Section 303-14 Electronic Engine Controls. For fuel system, REFER to Section 303-04 Fuel Charging and Controls. For CKP sensor tests, throttle sensor tests, REFER to Section 303-14 Electronic Engine Controls.
	Engine stalls with cruise control enabled	• ECM relay	For ECM relay tests, REFER to Section 303-14 Electronic Engine Controls.
	Engine stalls when maneuvering	• ECM relay • Throttle sensors	For ECM relay tests, throttle position sensor tests, REFER to Section 303-14 Electronic Engine Controls.
Poor driveability	Engine hesitates/poor acceleration	• Fuel pump • Injector leak • Fuel pressure regulator • Fuel lines • Air leakage • Throttle sensors • Throttle motor • Spark plugs • Check for water ingress into spark plug wells • HT short to ground (tracking)	For fuel pump, fuel pressure regulator, fuel line and injector tests, REFER to Section 303-04 Fuel Charging and Controls. For intake system, REFER to Section 303-12 Intake Air Distribution and Filtering. For throttle position sensor tests, REFER to Section 303-14 Electronic Engine Controls. For throttle motor tests,

Symptom (general)	Symptom (specific)	Possible source	Action
		check rubber boots for cracks/damage • Ignition coil failure(s) • EGR valve malfunction	REFER to Section 303-04 Fuel Charging and Controls. For ignition system, REFER to Section 303-07 Engine Ignition. For EGR valve circuit tests, GO to Pinpoint Test A.
	Engine backfires	• Fuel pump • Fuel lines • Air leakage • MAF sensor • Oxygen sensors • Spark plugs • Check for water ingress into spark plug wells • HT short to ground (tracking) check rubber boots for cracks/damage • Ignition coil failure(s)	For fuel pump and lines, REFER to Section 303-04 Fuel Charging and Controls. For intake system, REFER to Section 303-12 Intake Air Distribution and Filtering. For MAF sensor tests, oxygen sensor tests, REFER to Section 303-14 Electronic Engine Controls. For ignition system, REFER to Section 303-07 Engine Ignition.
	Engine surges	• Air leakage • Fuel pump • Fuel lines • MAF sensor • Harness • Throttle sensors • Throttle motor • Spark plugs • Check for water ingress into spark plug wells • HT short to ground (tracking) check rubber boots for cracks/damage	For intake system, REFER to Section 303-12 Intake Air Distribution and Filtering. For fuel pump and lines, REFER to Section 303-04 Fuel Charging and Controls. For MAF sensor tests, throttle position sensor tests, REFER to Section 303-14 Electronic Engine Controls. For ignition system, REFER to Section 303-07 Engine Ignition.
	Engine detonates/knocks	• KS/circuit malfunction • Fuel pump • Fuel lines • Fuel pressure regulator • MAF sensor • Oxygen sensors • Air leakage	For KS and circuit tests, REFER to Section 303-14 Electronic Engine Controls. For fuel pump, lines and regulator tests, REFER to Section 303-04 Fuel Charging and Controls. FOR MAF sensor tests, oxygen sensor tests, REFER to Section 303-14 Electronic Engine Controls. For intake system, REFER to Section 303-12 Intake Air Distribution and Filtering.
	No throttle response	• Throttle sensors • Throttle motor	For throttle position sensor tests, REFER to Section 303-14 Electronic Engine Controls. For throttle motor tests, REFER to Section 303-04 Fuel Charging and Controls.
	Cruise control inhibited or disabled	• Cruise control switch • Throttle sensors • Stop lamp switch	For cruise control switches, REFER to Section 310-03 Speed Control. For throttle position sensor tests, REFER to Section 303-14 Electronic Engine Controls. Check electrical guides for stop light switch information.
	Poor throttle response	• Throttle sensors • Coolant temperature sensor • MAF sensor	For throttle position sensor tests, ECT sensor tests, MAF sensor tests, REFER to Section 303-14 Electronic Engine Controls.
	Engine defaults (warning light and messages)	• Park/Neutral switch • Throttle sensors • MAF sensor • Coolant temperature sensor • Harness	For Park/Neutral tests, REFER to Section 307-05 Automatic Transmission/Transaxle External Controls. For throttle position sensor tests, MAF sensor tests, ECT sensor tests, REFER to Section 303-14 Electronic Engine Controls.

Diagnostic Trouble Code (DTC) index

DTC	Description	Possible Source	Action
P0400	EGR flow malfunction	• EGR valve incorrectly fitted or loose • EGR pipe blocked • EGR valve stuck open/closed • EGR valve failure	Refer to the visual inspection table. Check EGR valve fitment, pipework, etc. For EGR valve circuit tests, GO to Pinpoint Test A.
P0405	EGR valve drive circuits low voltage	• EGR valve power supply circuit open circuit • EGR valve to ECM drive circuit pair; (EGR valve pins 1/4; 6/3) open circuit, high resistance • EGR valve failure (stepper motor open circuit)	For EGR valve circuit tests, GO to Pinpoint Test A.
P0406	EGR valve drive circuits high voltage	• EGR valve to ECM drive circuit pair; (EGR valve pins 1/4; 6/3) short circuit to ground or high voltage • EGR valve failure (stepper motor short circuit)	For EGR valve circuit tests, GO to Pinpoint Test A.

Pinpoint Tests

PINPOINT TEST A : DTC P0400, P0405, P0406; EGR VALVE DRIVE CIRCUITS HIGH/LOW VOLTAGE	
TEST CONDITIONS	**DETAILS/RESULTS/ACTIONS**
A1: CHECK THE EGR VALVE POWER SUPPLY CIRCUIT	
	1 Disconnect the EGR valve electrical connector, PI34.
	2 Turn the ignition switch to the ON position.
	3 Make sure the EMS relay is energised.
	4 Measure the voltage between PI34, pins 02 (WU) and 05 (WU).
	Is the voltage less than 10 volts? **Yes** REPAIR the circuit between the EGR valve and battery. This circuit includes the EMS fuse box, (fuse 14) the EMS relay and the high power protection module. For additional information, refer to the wiring diagrams. CLEAR the DTC. TEST the system for nomal operation. **No** GO to A2.
A2: CHECK THE EGR VALVE TO ECM DRIVE CIRCUITS FOR HIGH RESISTANCE (PIN 04)	
	1 Turn the ignition switch to the OFF position.
	2 Disconnect the battery negative terminal.
	3 Disconnect the ECM electrical connector, EM80.
	4 Measure the resistance between PI34, pin 04 (YU) and EM80, pin 57 (YU).
	Is the resistance greater than 5 ohms? **Yes** REPAIR the high resistance circuit. For additional information, refer to the wiring diagrams. CLEAR the DTC. TEST the system for normal operation. **No** GO to A3.
A3: CHECK THE EGR VALVE TO ECM DRIVE CIRCUITS FOR HIGH RESISTANCE (PIN 06)	
	1 Measure the resistance between PI34, pin 06 (Y) and EM80, pin 59 (Y).
	Is the resistance greater than 5 ohms? **Yes** REPAIR the high resistance circuit. For additional information, refer to the wiring diagrams. CLEAR the DTC. TEST the system for normal operation. **No** GO to A4.
A4: CHECK THE EGR VALVE TO ECM DRIVE CIRCUITS FOR HIGH RESISTANCE (PIN 01)	
	1 Measure the resistance between PI34, pin 01 (YG) and EM80, pin 58 (YG).
	Is the resistance greater than 5 ohms? **Yes** REPAIR the high resistance circuit. For additional information, refer to the wiring diagrams. CLEAR the DTC. TEST the system for normal operation. **No** GO to A5.
A5: CHECK THE EGR VALVE TO ECM DRIVE CIRCUITS FOR HIGH RESISTANCE (PIN 03)	
	1 Measure the resistance between PI34, pin 03 (YR) and EM80, pin 80 (YR).
	Is the resistance greater than 5 ohms? **Yes** REPAIR the high resistance circuit. For additional information, refer to the wiring diagrams. CLEAR the DTC. TEST the system for normal operation. **No** INSTALL a new EGR valve. If the DTC is repeated, contact Dealer technical support for advice on possible ECM failure.

Engine Emission Control - Exhaust Gas Recirculation (EGR) Valve

Removal and Installation

Removal

All vehicles

WARNING: TO AVOID HOT COOLANT OR STEAM BLOWING OUT OF THE COOLING SYSTEM, USE EXTREME CARE WHEN REMOVING THE COOLANT EXPANSION TANK PRESSURE CAP. WAIT UNTIL THE ENGINE HAS COOLED DOWN, THEN INSULATE THE COOLANT PRESSURE CAP WITH A SUITABLE CLOTH AND SLOWLY LOOSEN THE COOLANT EXPANSION TANK PRESSURE CAP UNTIL THE COOLING SYSTEM PRESSURE IS RELEASED. DO NOT REMOVE THE COOLANT EXPANSION TANK PRESSURE CAP. STEP BACK WHILE THE PRESSURE IS RELEASED FROM THE SYSTEM. WHEN ALL OF THE PRESSURE HAS BEEN RELEASED SLOWLY REMOVE THE COOLANT EXPANSION TANK PRESSURE CAP (STILL WITH THE SUITABLE CLOTH IN POSITION) FROM THE COOLANT EXPANSION TANK. FAILURE TO FOLLOW THIS INSTRUCTION MAY RESULT IN PERSONAL INJURY.

1. Release the cooling system pressure.
   - Remove the coolant expansion tank pressure cap.
2. Remove the air cleaner outlet pipe.
   For additional information, refer to: Air Cleaner Outlet Pipe (303-12 Intake Air Distribution and Filtering, Removal and Installation).

Vehicles with supercharger

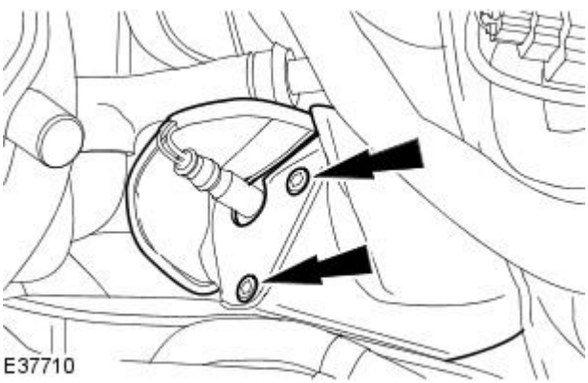

3. Remove the catalytic converter heat shield.

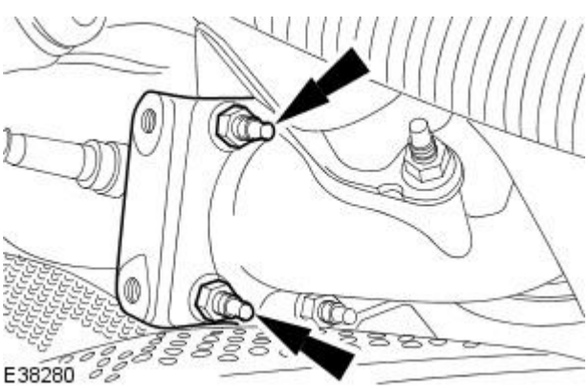

4. Remove the catalytic converter heat shield retaining bracket.

Vehicles without supercharger

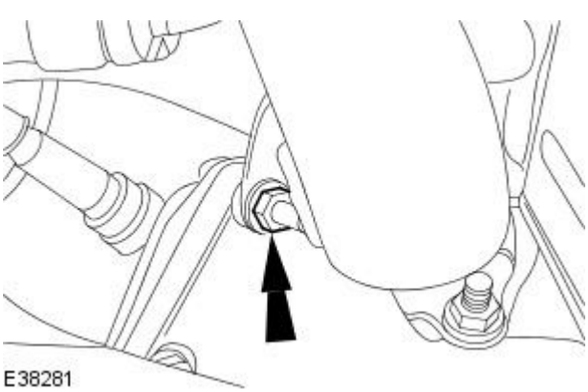

5. Remove the exhaust manifold to exhaust gas recirculation (EGR) valve tube heat shield retaining nut.

All vehicles

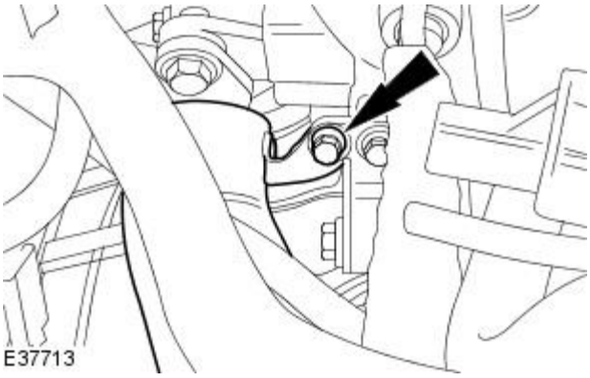

6. Remove the exhaust manifold to EGR valve tube heat shield.

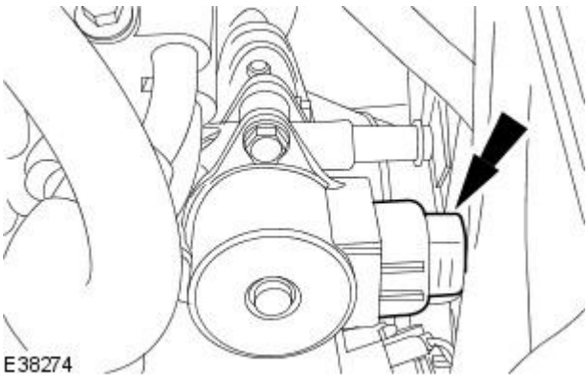

7. Disconnect the EGR valve electrical connector.

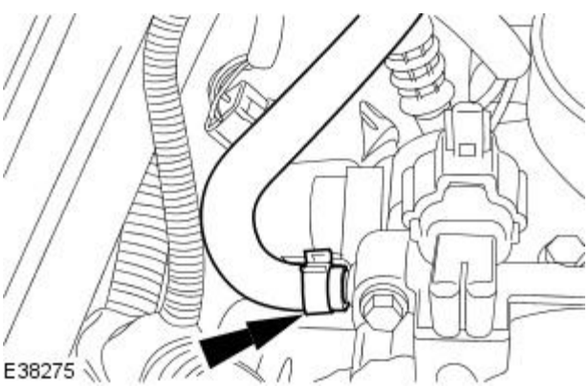

8. Disconnect the EGR valve coolant hose.

- Cap the coolant hose to minimize coolant loss.
- Remove and discard the coolant hose retaining clip.

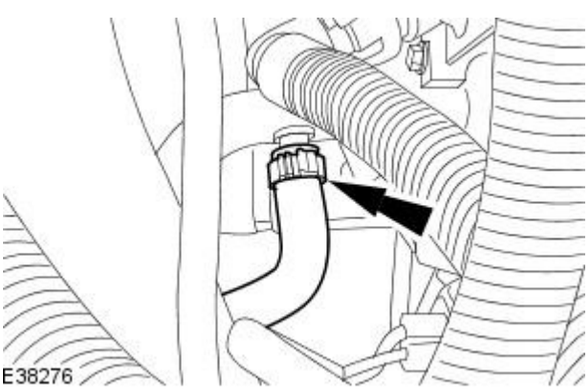

9. Disconnect the EGR valve to heater core inlet coolant hose.

- Cap the coolant hose to minimize coolant loss.
- Remove and discard the coolant hose retaining clip.

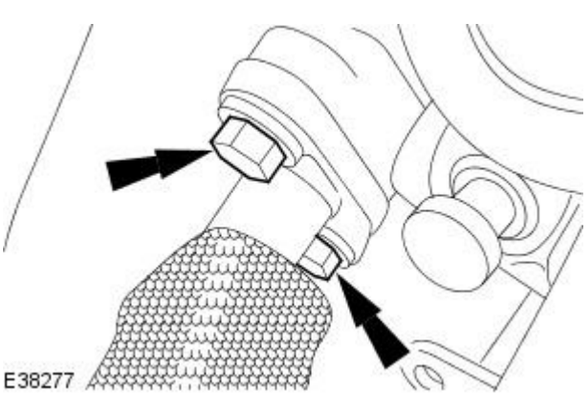

10. Remove the exhaust manifold to EGR valve tube retaining bolts.

- Remove and discard the gasket.

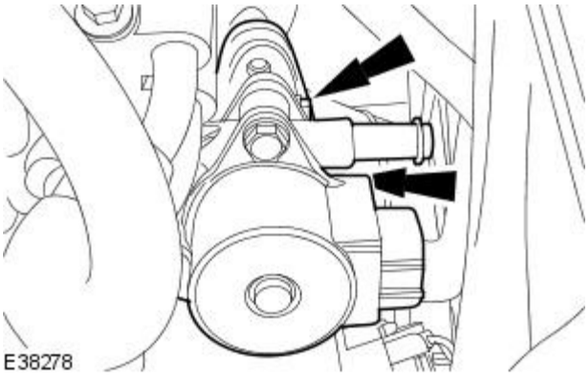

11. Remove the EGR valve.

- Remove and discard the gasket.

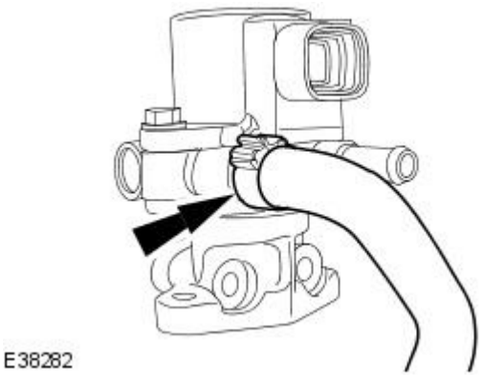

12. Remove the EGR valve coolant hose.

- Remove and discard the coolant hose retaining clip.

Installation

All vehicles

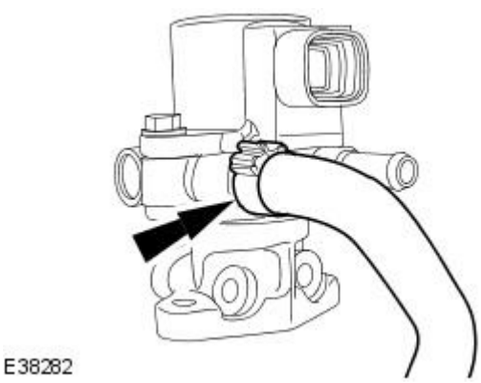

1. Install the EGR valve coolant hose.

- Install a new coolant hose retaining clip.

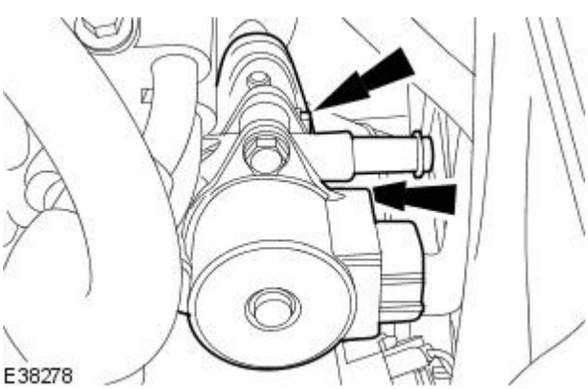

2. Install the EGR valve.

- Install a new gasket.
- Tighten to 10 Nm.

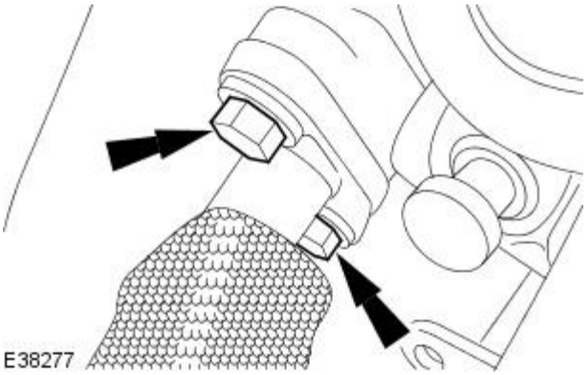

3. Install the exhaust manifold to EGR valve tube retaining bolts.

- Install a new gasket.
- Tighten to 21 Nm.

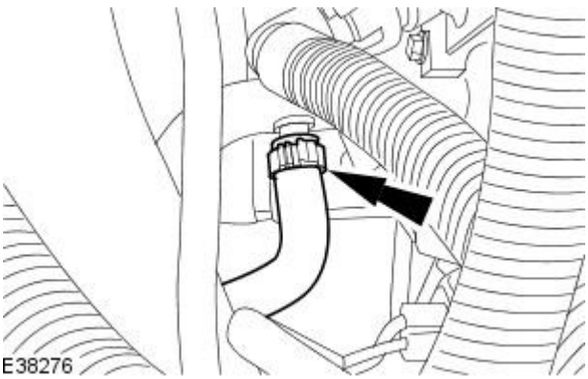

4. Uncap the EGR valve to heater core inlet coolant hose.

5. Connect the EGR valve to heater core inlet coolant hose.

- Install a new coolant hose retaining clip.

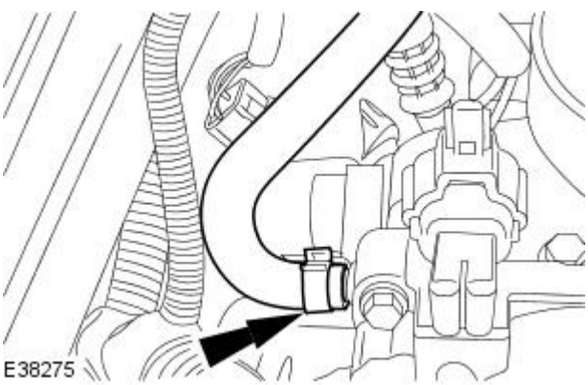

6. Uncap the EGR valve coolant hose.

7. Connect the EGR valve coolant hose.

- Install a new coolant hose retaining clip.

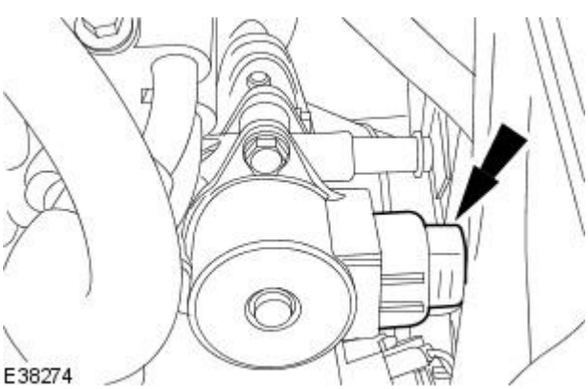

8. Connect the EGR valve electrical connector.

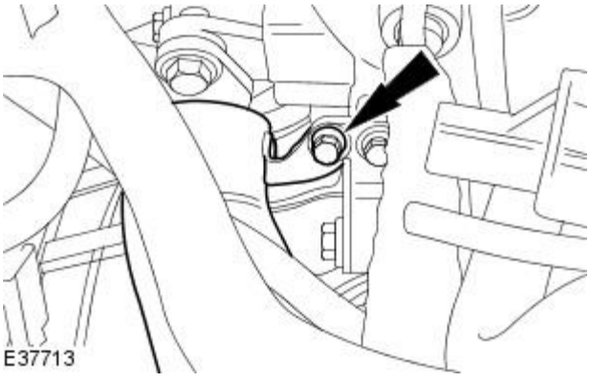

9. Install the exhaust manifold to EGR valve tube heat shield.

- Tighten to 9 Nm.

Vehicles without supercharger

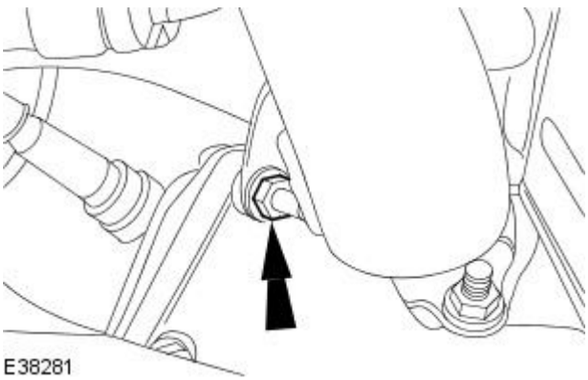

10. Install the exhaust manifold to EGR valve tube heat shield retaining nut.

- Tighten to 20 Nm.

Vehicles with supercharger

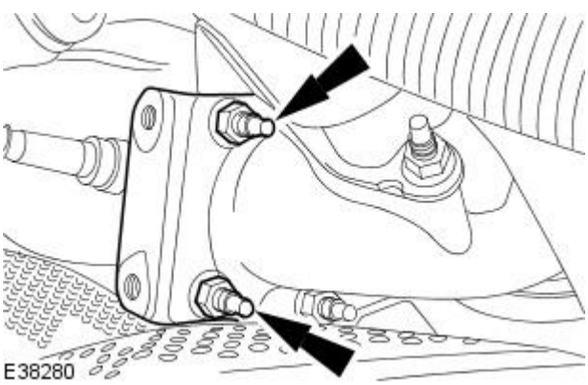

11. Install the catalytic converter heat shield retaining bracket.

- Tighten to 20 Nm.

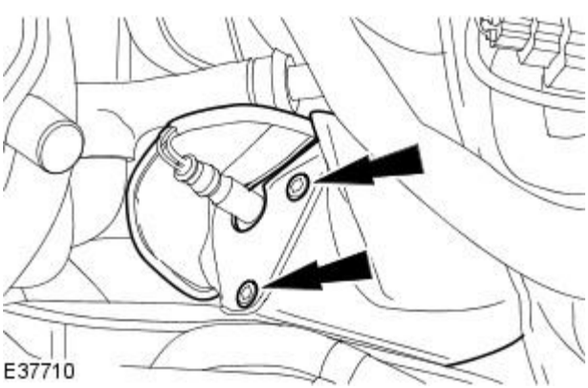

12. Install the catalytic converter heat shield.

All vehicles

13. Install the air cleaner outlet pipe.
For additional information, refer to: Air Cleaner Outlet Pipe (303-12 Intake Air Distribution and Filtering, Removal and Installation).

14. Fill the cooling system up to the MAX mark on the coolant expansion tank.

15. Install the coolant expansion tank pressure cap.

16. NOTE: For NAS vehicles only.

If required, carry out a long drive cycle.
For additional information, refer to: Powertrain Control Module (PCM) Long Drive Cycle Self-Test (303-14 Electronic Engine Controls, General Procedures).

Engine Emission Control - Exhaust Manifold to Exhaust Gas Recirculation (EGR) Valve Tube

Removal and Installation

Removal

All vehicles

1. Remove the air cleaner outlet pipe.
   For additional information, refer to Section 303-12 Intake Air Distribution and Filtering.

Vehicles with supercharger

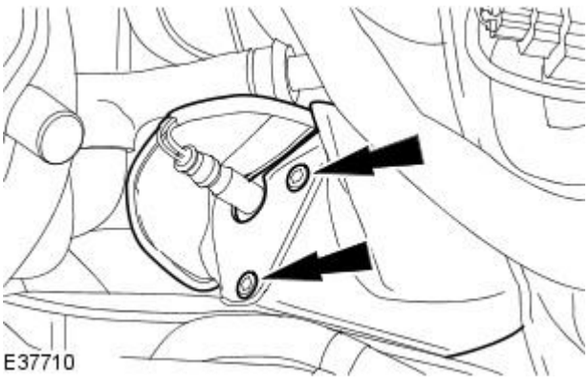

2. Remove the catalytic converter heat shield.

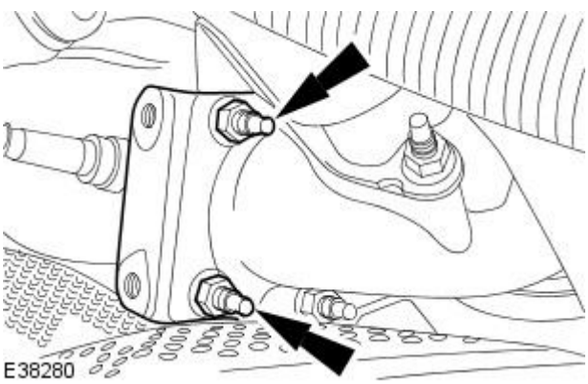

3. Remove the catalytic converter heat shield retaining bracket.

Vehicles without supercharger

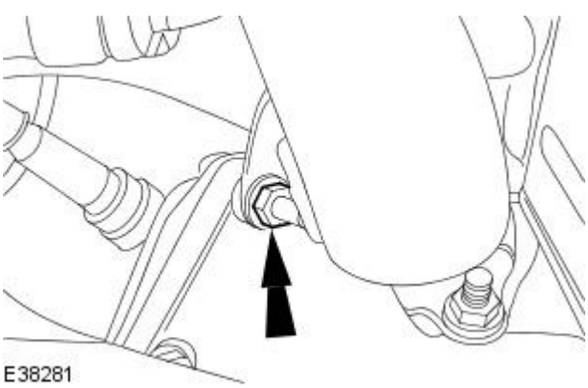

4. Remove the exhaust manifold to exhaust gas recirculation (EGR) valve tube heat shield retaining nut.

All vehicles

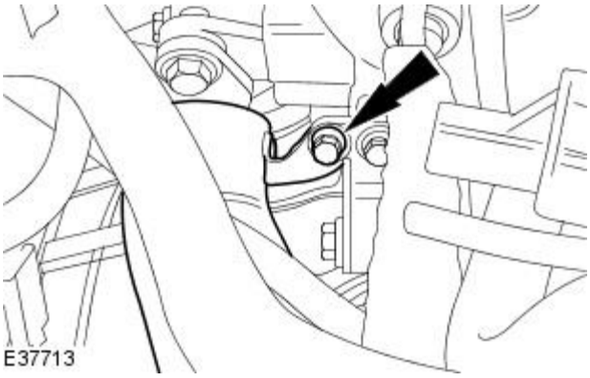

5. Remove the exhaust manifold to EGR valve tube heat shield.

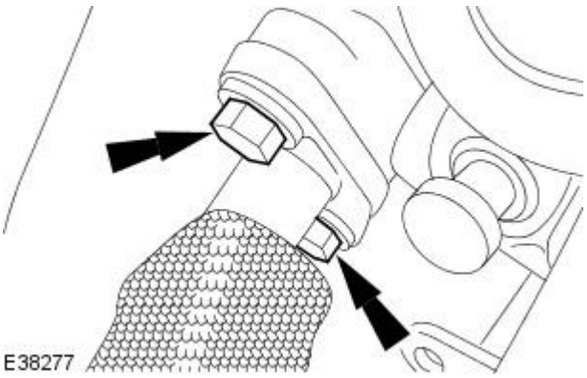

6. Remove the exhaust manifold to EGR valve tube retaining bolts.

- Remove and discard the gasket.

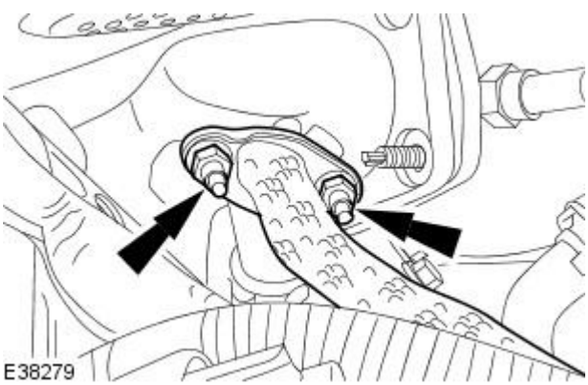

7. Remove the exhaust manifold to EGR valve tube.

- Remove and discard the gasket.

Installation

All vehicles

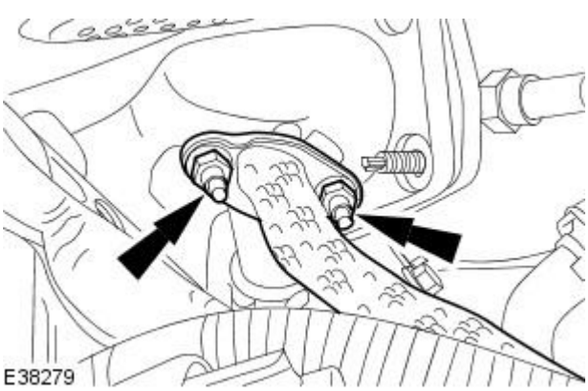

1. To install, reverse the removal procedure.

- Install a new gasket.
- Tighten to 21 Nm.

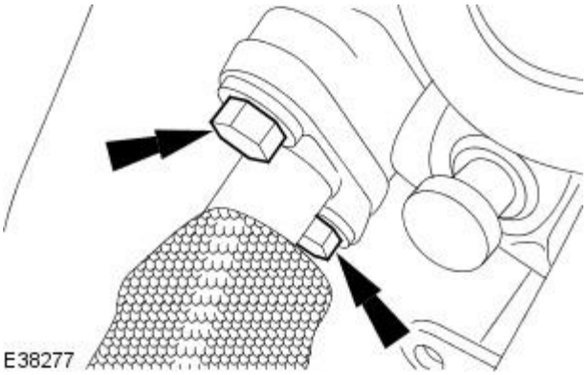

2. Tighten to 21 Nm.

- Install a new gasket.

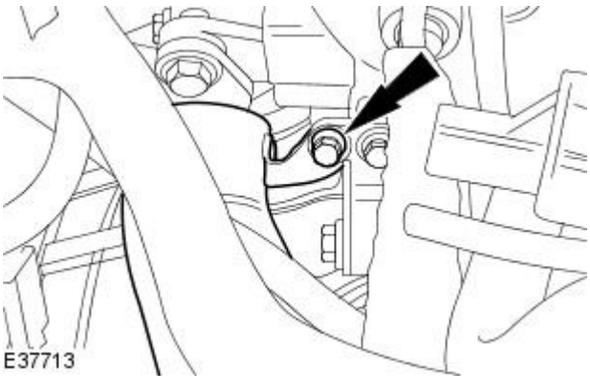

3. Tighten to 9 Nm.

Vehicles without supercharger

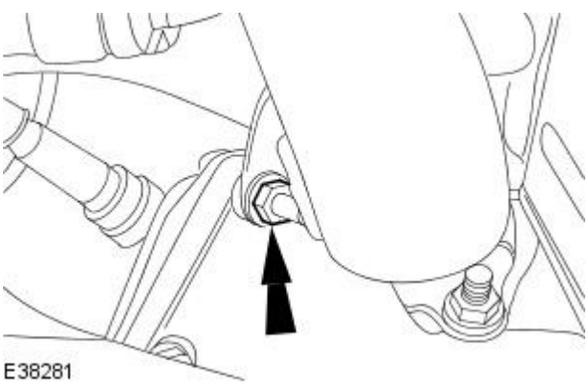

4. Tighten to 20 Nm.

Vehicles with supercharger

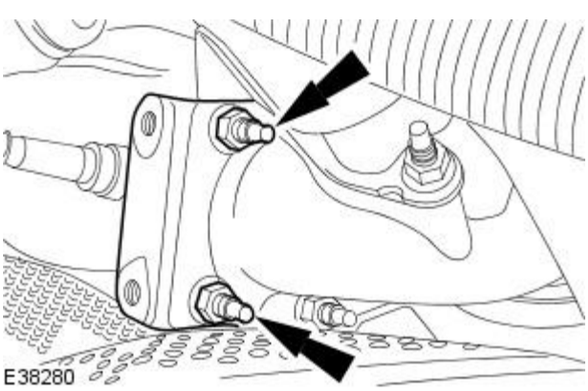

5. Tighten to 20 Nm.

Intake Air Distribution and Filtering -

Torque Specifications

Description	Nm	lb-ft	lb-in
Air cleaner retaining bolt	8	-	71
Charge air cooler intake assembly retaining bolts	21	15	-
Supercharger outlet pipe to charge air cooler intake assembly retaining bolts	21	15	-
Supercharger outlet pipe retaining bolts	10	7	-
Supercharger retaining bolts	24	18	-
Throttle body elbow retaining bolts	24	18	-
Throttle body elbow lower retaining bracket retaining bolts	20	15	-
Exhaust gas recirculation (EGR) valve retaining bolts	10	7	-
Exhaust manifold to EGR valve tube retaining bolts	21	15	-
Exhaust manifold to EGR valve tube retaining nuts	21	15	-
Thermostat housing retaining bolts	10	7	-
Throttle body intake hose retaining clip	5	-	45

Published: 11-May-2011

Intake Air Distribution and Filtering - Intake Air Distribution and Filtering

Description and Operation

Vehicles With Supercharger Shown, Vehicles Without Supercharger Similar.

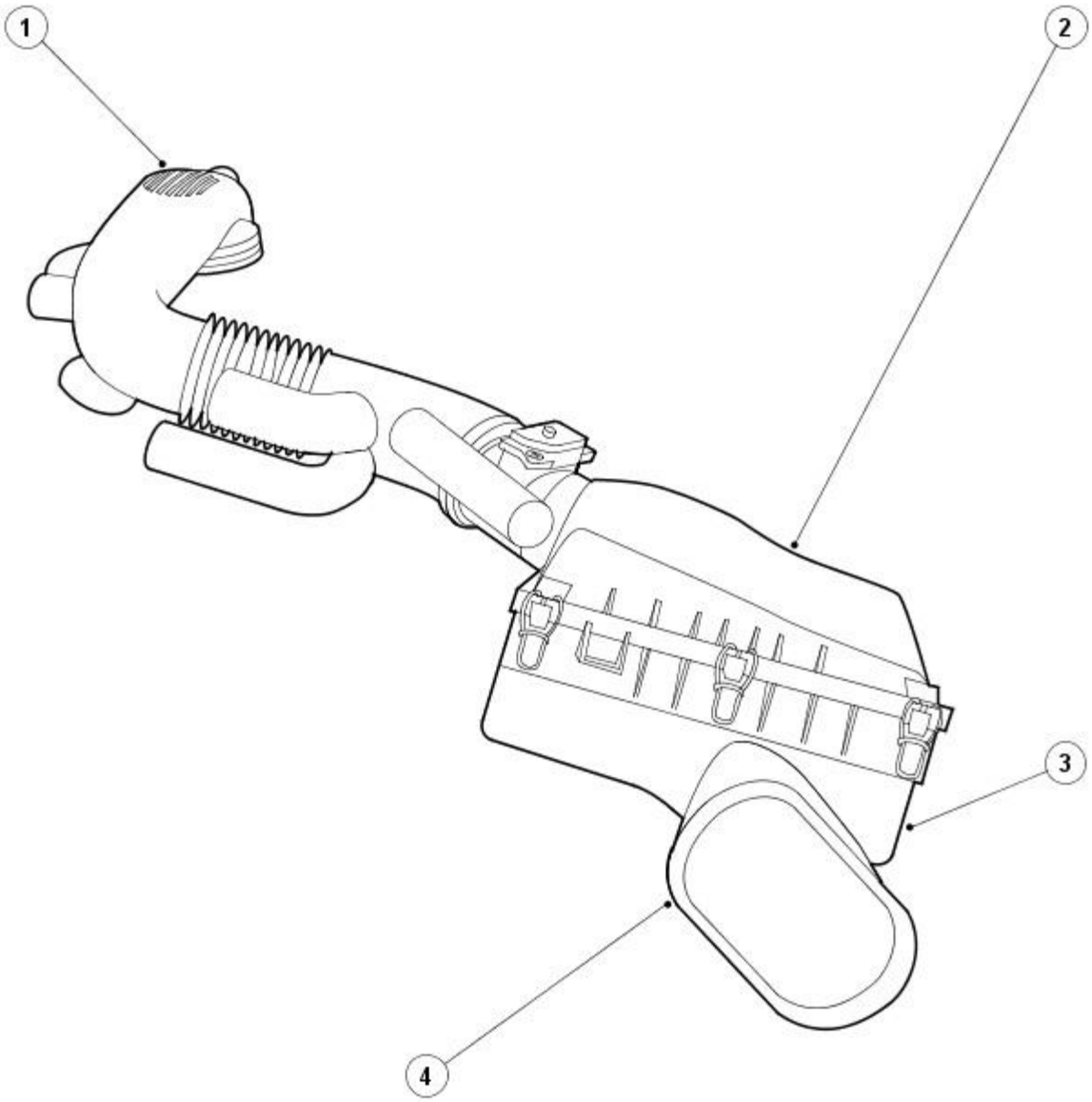

E38398

Item	Part Number	Description
1	—	Air cleaner outlet pipe
2	—	Air cleaner
3	—	Additional air inlet actuator - vehicles fitted with supercharger
4	—	Air cleaner intake pipe

Vehicles With Supercharger

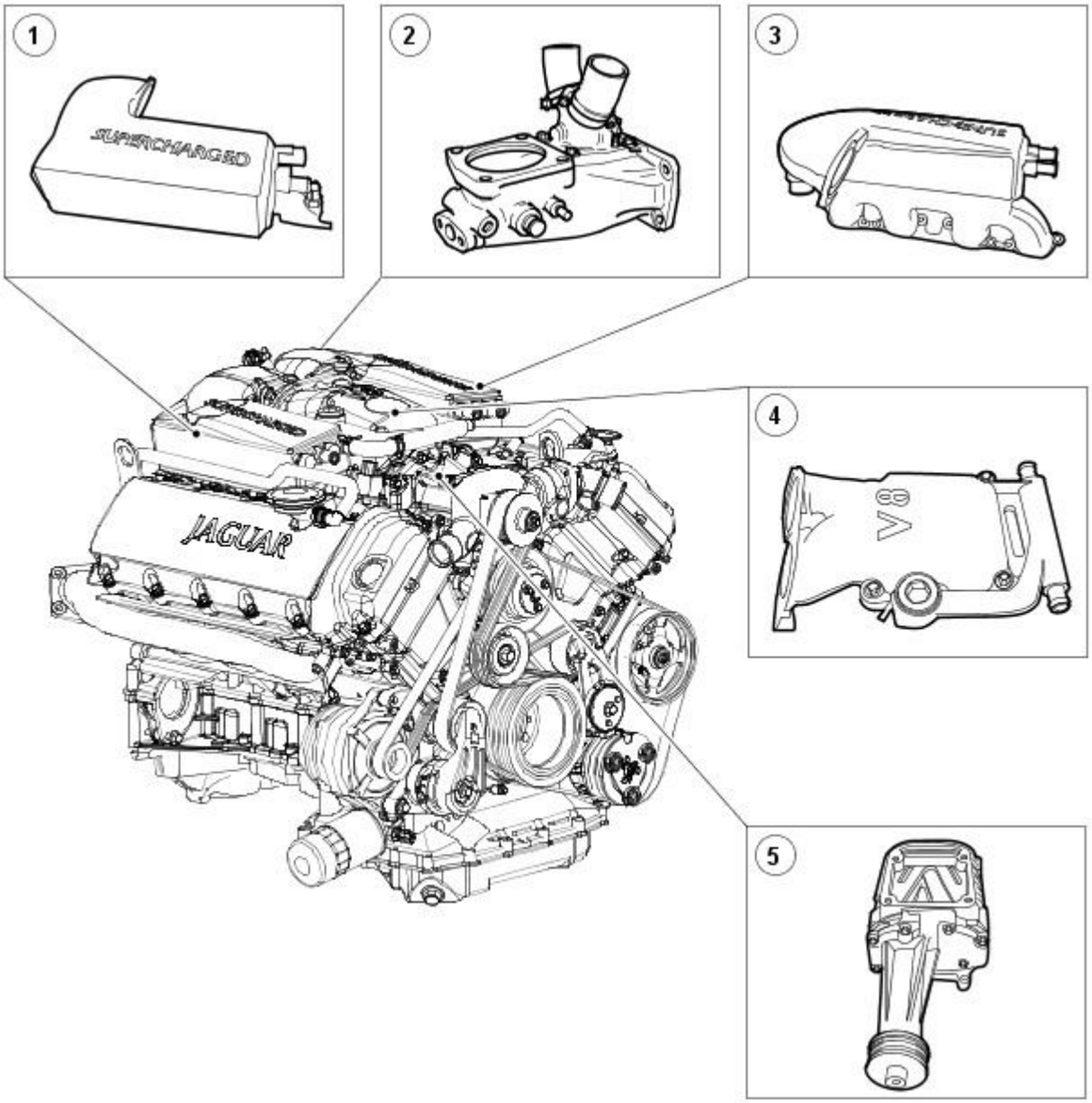

E38399

Item	Part Number	Description
1	—	Charge air cooler
2	—	Throttle body elbow
3	—	Charge air cooler
4	—	Supercharger outlet pipe
5	—	Supercharger

Air is supplied to the supercharger via the air cleaner intake pipe, air cleaner, air cleaner outlet pipe, throttle body and throttle body elbow. The supercharger delivers pressurized air to two separate charge air coolers, each being mounted on the cylinders it supplies. Pressurized cooled air is fed from the charge air coolers directly into each intake port. The air cleaner outlet pipe differs from the normally aspirated by having tuned resonators to reduce intake air noise levels. An intake air temperature (IAT) sensor is fitted at the outlet of the right-hand charge air cooler. The IAT sensor provides an input to the engine control module (ECM).
For additional information, refer to Section 303-14 Electronic Engine Controls.
The intake elbow directs the metered airflow from the throttle body outlet (underside of the throttle body) into the intake of the supercharger. The supercharger by-pass valve assembly is part of the intake elbow. The butterfly valve inside the assembly is opened by a diaphragm actuator operated by vacuum feed from the elbow. At closed or partially open throttle positions, the butterfly valve opens, allowing the airflow from the two charge air cooler inlets to be directed back to the supercharger inlet. This action inhibits the supercharging effect and reduces engine torque. Progressive opening of the throttle causes the by-pass valve to gradually close.

Supercharger

The supercharger is attached to the three mounting bosses between the two cylinder heads. The supercharger has a filled for life internal lubrication system. The supercharger is positively aligned with the drive belt by a doweled mounting bracket.

Charge Air Cooler

Each cylinder bank is fitted with a charge air cooler which supplies pressurized air to the four cylinders. The intake ports to the two charge air coolers are connected to the supercharger via the supercharger outlet pipe consisting of adjustable metal ducts with bonded rubber seals. The charge air coolers are water cooled via a radiator and water pump. For additional information, refer to Section 303-03A Engine Cooling / 303-03B Supercharger Cooling.

Intake Air Distribution and Filtering - Intake Air Distribution and Filtering

Diagnosis and Testing

Inspection and Verification

1. **1.** Verify the customer concern by operating the system.
2. **2.** Visually inspect for a obvious signs of mechanical damage.
3. **3.** Verify the customer concern.
4. **4.** Visually inspect for obvious signs of mechanical damage.

Visual Inspection Chart

Mechanical
• Air cleaner intake pipe • Air cleaner outlet pipe • Air cleaner element • Throttle body intake pipe • Throttle body gasket • Throttle body • Supercharger outlet pipe to charge air cooler duct(s) • Supercharger outlet pipe gasket • Supercharger outlet pipe • Throttle body elbow • Throttle body elbow gasket • Throttle body elbow retaining bolt seal(s) • Supercharger • Charge air cooler gasket(s) • Charge air cooler(s)

5. **5.** If an obvious cause for an observed or reported concern is found, correct the cause (if possible) before proceeding to the next step
6. **6.** Where the Jaguar approved diagnostic system is available, complete the S93 report before clearing any or all fault codes from the vehicle.

• NOTE: If a DTC cannot be cleared, then there is a permanent fault present that flags again as soon as it is cleared. (The exception to this is P1260, which will only clear following an ignition OFF/ON cycle after rectification.)

7. **7.** If the cause is not visually evident and the Jaguar Approved Diagnostic System is not available, use a fault code reader to retrieve the fault codes before proceeding to the Diagnostic Trouble Code (DTC) Index Chart.
8. **8.** Using the Jaguar approved diagnostic system where available, and a scan tool where not, check the freeze frame data for information on the conditions applicable when the fault was flagged. The format of this will vary, depending on the tool used, but can provide information useful to the technician in diagnosing the fault.

CAUTION: When probing connectors to take measurements in the course of the pinpoint tests, use the adaptor kit, part number 3548-1358-00.

• NOTE: When performing electrical voltage or resistance tests, always use a digital multimeter (DMM) accurate to 3 decimal places, and with an up-to-date calibration certificate. When testing resistance, always take the resistance of the DMM leads into account.

• NOTE: Check and rectify basic faults before beginning diagnostic routines involving pinpoint tests.

DTC	Description	Possible Source	Action
P0096	Intake air temperature (IAT) sensor 2 circuit range/performance	• IAT sensor 2 disconnected • IAT sensor 2 to ECM sensing circuit open circuit • IAT sensor 2 failure	REFER to Section 303-14 Electronic Engine Controls.
P0097	Intake air temperature (IAT) sensor 2 circuit high voltage (low air temperature)	• IAT sensor 2 disconnected • IAT sensor 2 to ECM wiring; open circuit or high resistance • IAT sensor 2 to ECM sensing circuit; short circuit to B+ voltage • IAT sensor 2 failure	REFER to Section 303-14 Electronic Engine Controls.
P0098	Intake air temperature (IAT) sensor 2 circuit low voltage (high air temperature)	• IAT sensor 2 to ECM wiring; short circuit to ground • IAT sensor 2 failure	REFER to Section 303-14 Electronic Engine Controls.
P0101	Mass air flow (MAF) sensor circuit range/performance	• Blocked air filter • Air intake leak • Engine breather leak • Throttle control malfunction • MAF sensor to ECM sensing circuit; high resistance, intermittent short circuit to ground • MAF sensor supply circuit; high resistance	REFER to Section 303-14 Electronic Engine Controls.

DTC	Description	Possible Source	Action
		• MAF sensor failure • Throttle adaption fault (check throttle position voltage at ignition ON)	
P0102	Mass air flow (MAF) sensor circuit low voltage	• Blocked air filter • Air intake leak between MAF sensor and throttle • MAF sensor to ECM sensing circuit; high resistance, open circuit, intermitent short circuit to ground • MAF sensor supply circuit; open circuit, short circuit to ground • MAF sensor failure	REFER to Section 303-14 Electronic Engine Controls.
P0103	Mass air flow (MAF) sensor sense circuit high voltage	• MAF sensor to ECM sensing circuit; short circuit to B+ voltage • MAF sensor to ECM ground circuit; open circuit • MAF sensor failure	REFER to Section 303-14 Electronic Engine Controls.
P0111	Intake air temperature (IAT) sensor range/performance	• Blocked air filter • Air intake leak • Engine breather leak • IAT sensor to ECM wiring; open circuit or high resistance • IAT sensor to ECM sensing circuit; short circuit to high voltage • IAT sensor failure	REFER to Section 303-14 Electronic Engine Controls.
P0112	Intake air temperature (IAT) sensor circuit high voltage (low air temperature)	• IAT sensor disconnected • IAT sensor to ECM wiring; open circuit or high resistance • IAT sensor to ECM sensing circuit short circuit to B+ voltage • IAT sensor failure	REFER to Section 303-14 Electronic Engine Controls.
P0113	Intake air temperature (IAT) sensor circuit low voltage (high air temperature)	• IAT sensor to ECM wiring short circuit to ground • IAT sensor failure	REFER to Section 303-14 Electronic Engine Controls.
P1410	Additional air inlet actuator drive circuit malfunction	• ECM to air cleaner solenoid circuit; open circuit, short circuit, high resistance • Air cleaner solenoid failure	REFER to Section 303-14 Electronic Engine Controls.

Intake Air Distribution and Filtering - Air Cleaner

Removal and Installation

Removal

All vehicles

1. Remove the air cleaner outlet pipe.
   For additional information, refer to Air Cleaner Outlet Pipe - in this section.
2. Disconnect the mass air flow (MAF) sensor electrical connector.

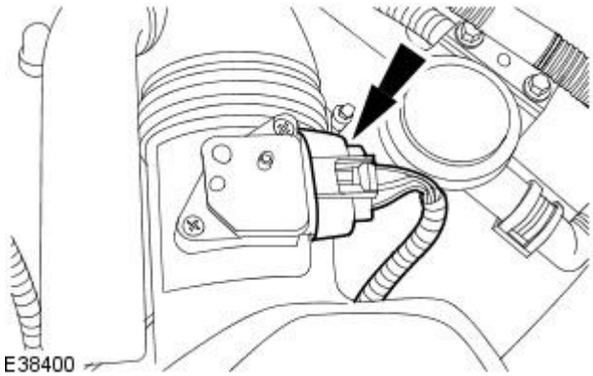

3. Detach the air cleaner intake pipe.

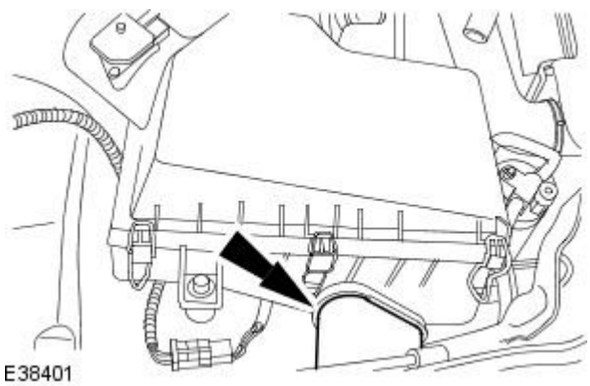

4. Detach the air cleaner.

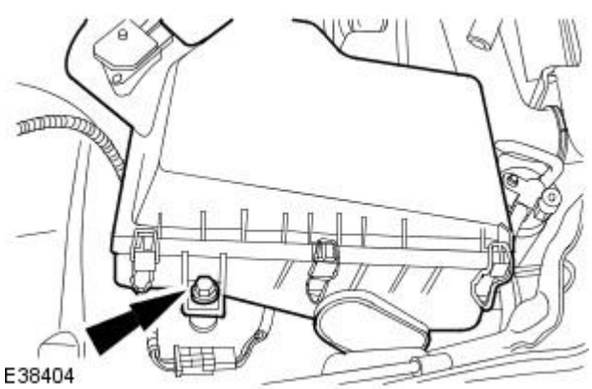

Vehicles with supercharger

5. Disconnect the air intake actuator electrical connector.

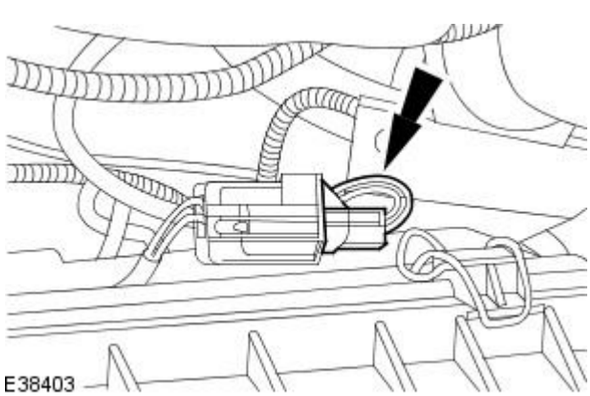

All vehicles

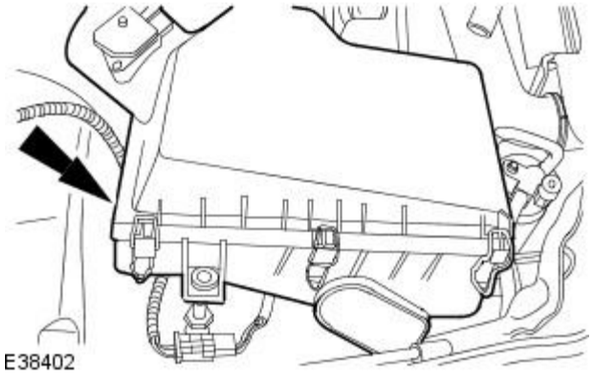

6. Remove the air cleaner.

Installation

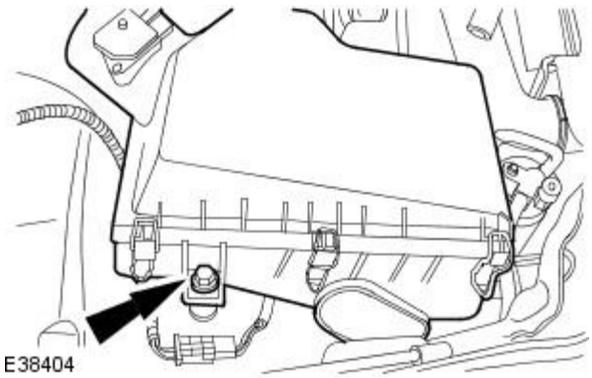

1. NOTE: When installing the air cleaner, make sure the locating pegs fit securely in the locating grommets.

To install, reverse the removal procedure.

- Tighten to 8 Nm.

Intake Air Distribution and Filtering - Air Cleaner Element

Removal and Installation

Removal

1. Remove the air cleaner outlet pipe.
   For additional information, refer to Air Cleaner Outlet Pipe - in this section.
2. Disconnect the mass air flow (MAF) sensor electrical connector.

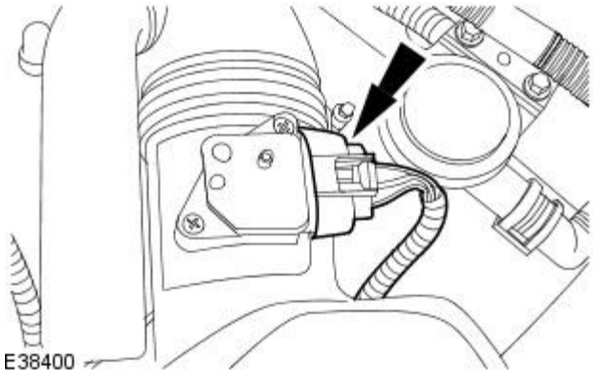

3. Remove the air cleaner cover.

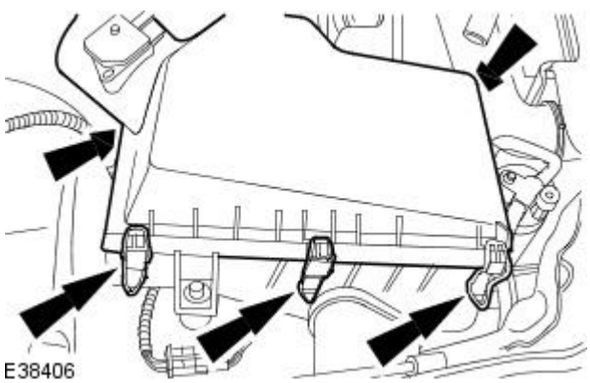

4. Remove the air cleaner element.

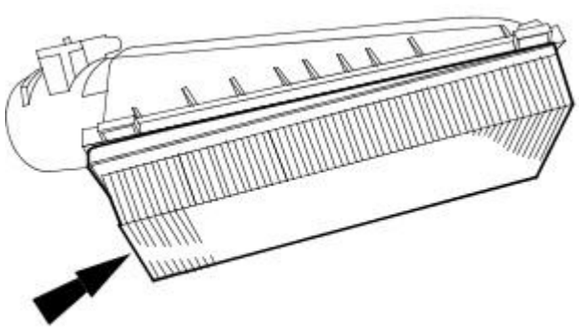

Installation

1. To install, reverse the removal procedure.

Intake Air Distribution and Filtering - Air Cleaner Outlet Pipe

Removal and Installation

Removal

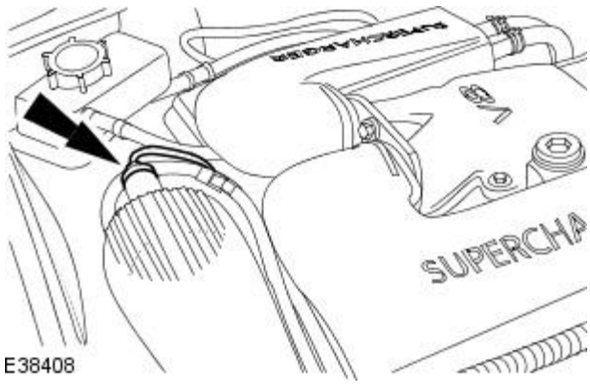

1. Disconnect the crankcase ventilation tube.

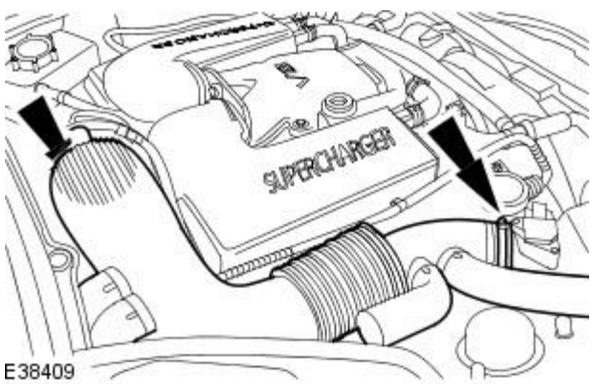

2. Remove the air cleaner outlet pipe.

Installation

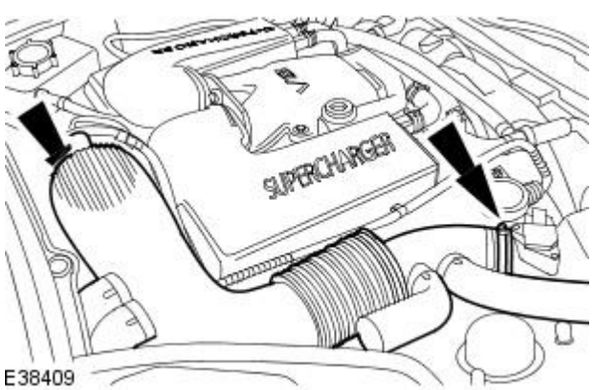

1. CAUTION: Do not use lubricant to aid installation of the air cleaner outlet pipe.

• NOTE: Make sure the air cleaner outlet pipe is correctly located on the throttle body and air cleaner as the retaining clips are tightened.

Install the air cleaner outlet pipe.

1. Tighten to 5 Nm.

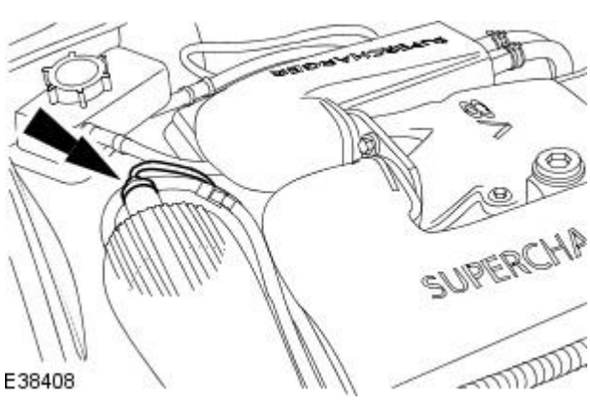

2. Connect the crankcase ventilation tube.

Intake Air Distribution and Filtering - Charge Air Cooler RH

Removal and Installation

Removal

1. Remove the supercharger.
   For additional information, refer to Supercharger - in this section.
2. Detach the engine wiring harness.

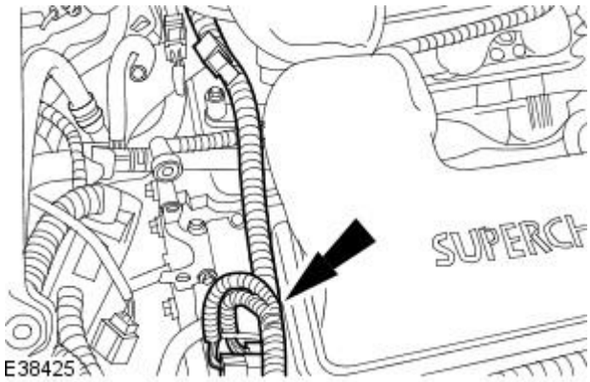

3. Disconnect the intake air temperature (IAT) sensor electrical connector.

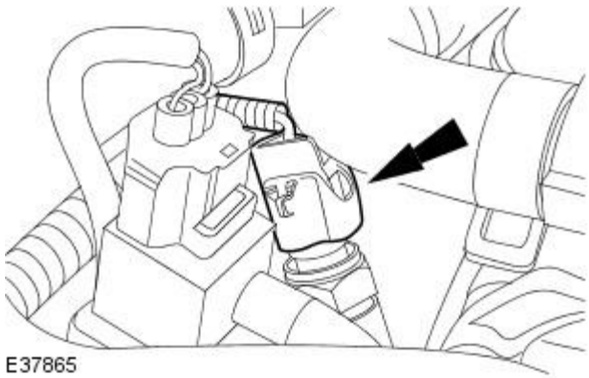

4. Detach the coolant hose.

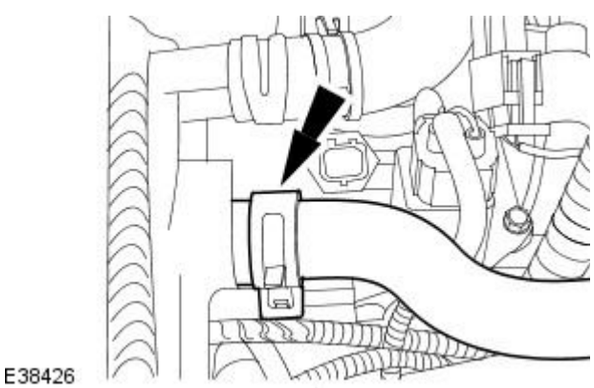

5. Remove the charge air cooler.

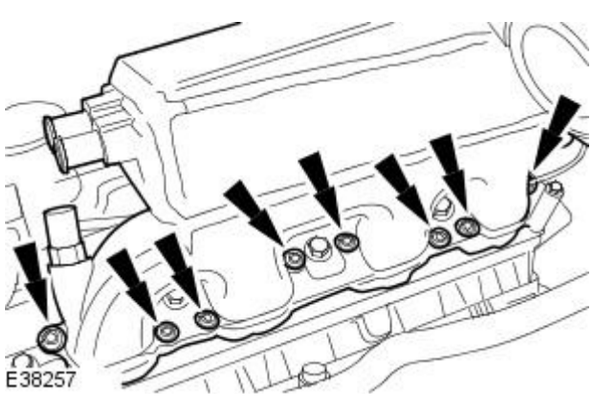

Installation

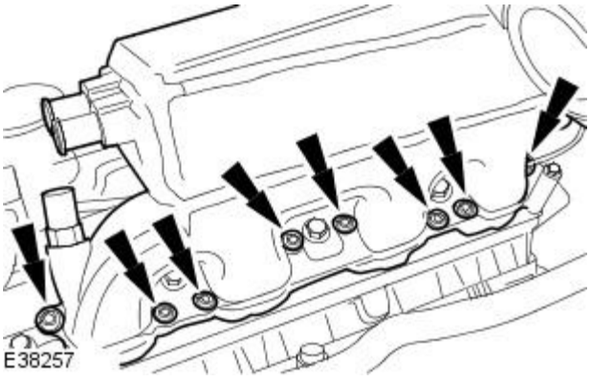

1. To install, reverse the removal procedure.

- Tighten to 13 Nm.

Intake Air Distribution and Filtering - Supercharger

Removal and Installation

Special Tool(s)	
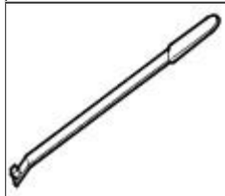 303-631	Belt tensioner release tool 303-631

Removal

1. Remove the throttle body.
   For additional information, refer to Section 303-04 Fuel Charging and Controls.
2. Remove the exhaust manifold to exhaust gas recirculation (EGR) valve tube.
   For additional information, refer to Section 303-08 Engine Emission Control.
3. Remove the supercharger outlet pipe.
   For additional information, refer to Supercharger Outlet Pipe - in this section.
4. Detach and reposition the engine wiring harness.

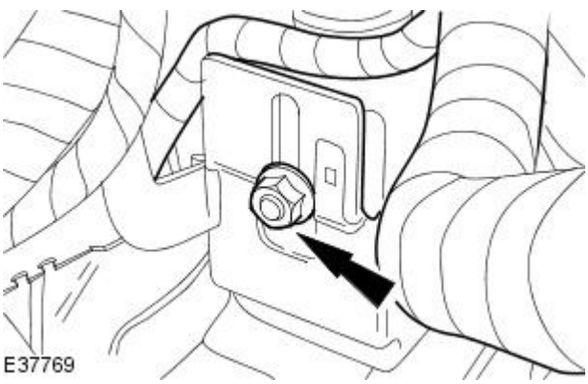

5. Disconnect the brake booster vacuum hose.

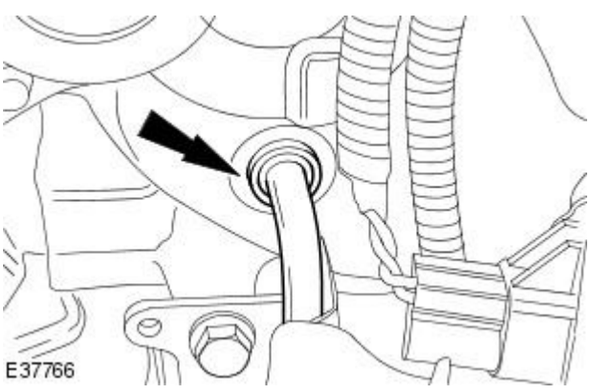

6. Disconnect the crankcase ventilation tube.

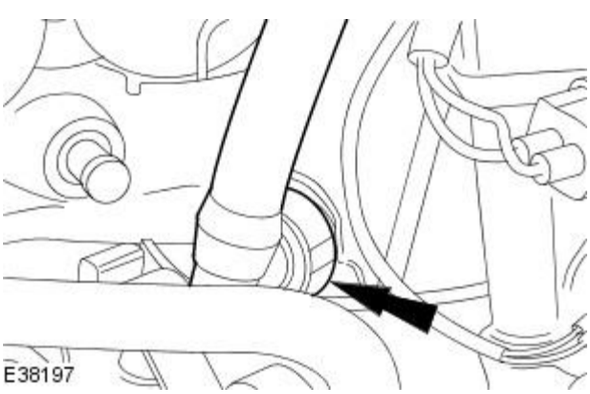

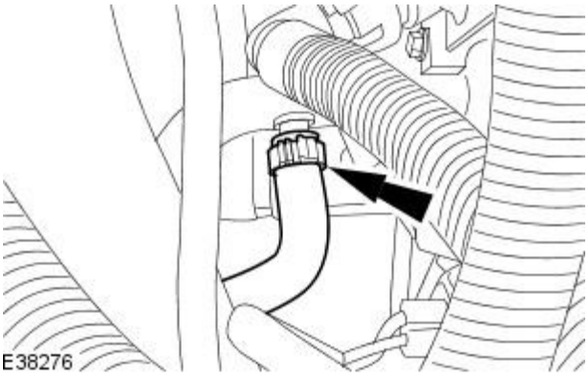

7. Disconnect the EGR valve to heater core inlet coolant hose.

- Remove and discard the coolant hose retaining clip.

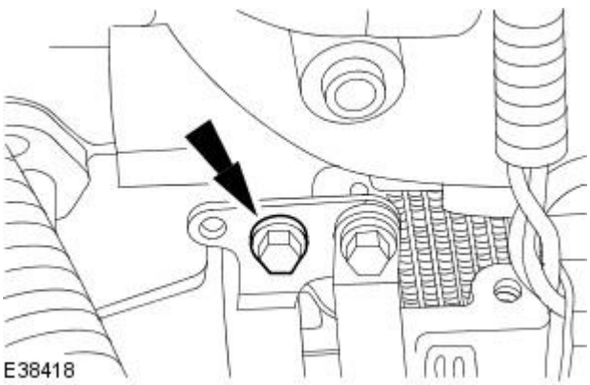

8. Remove the right-hand throttle body elbow retaining bolt.

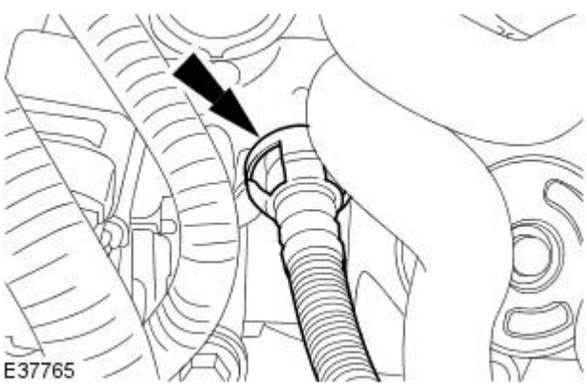

9. Disconnect the evaporative emission purge valve tube.

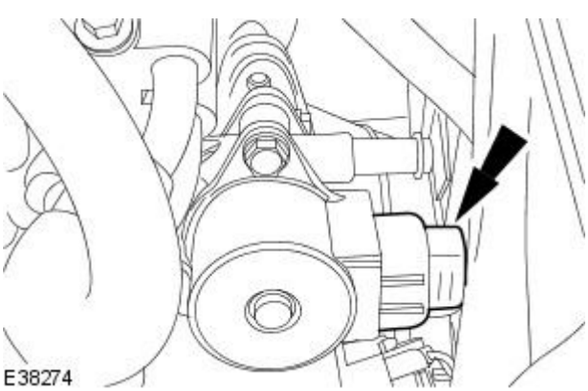

10. Disconnect the EGR valve electrical connector.

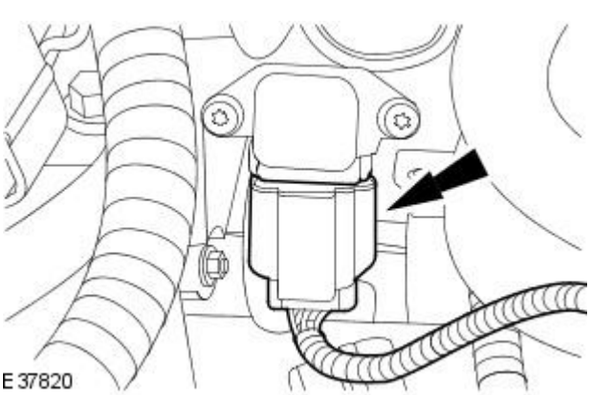

11. Disconnect the manifold absolute pressure (MAP) sensor electrical connector.

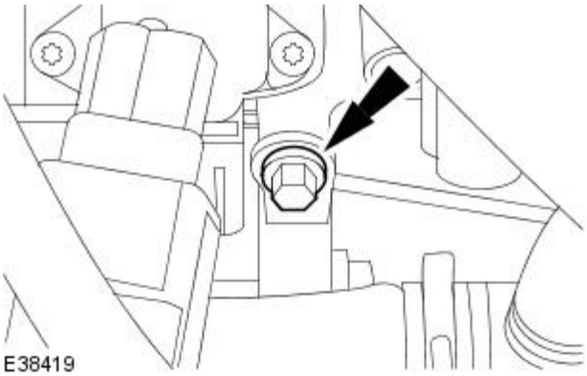

12. Remove the left-hand throttle body elbow retaining bolt.

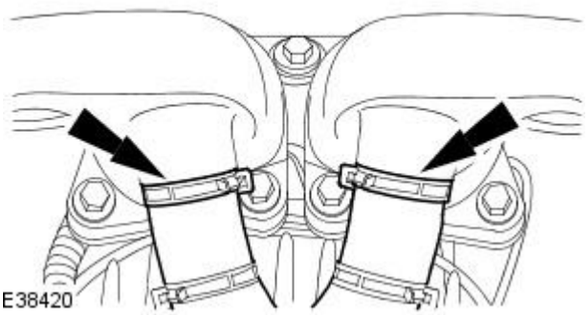

13. Reposition the charge air cooler hose retaining clips.

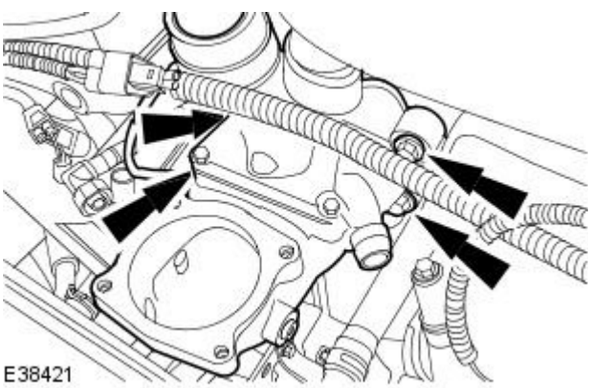

14. Remove the throttle body elbow.

- Remove and discard the throttle body elbow gasket.
- Remove and discard the retaining bolt seals.

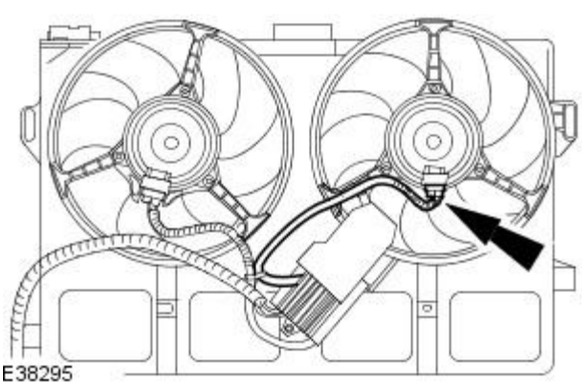

15. NOTE: Twin fan and motor assembly shown removed for clarity.

Disconnect the right-hand cooling fan electrical connector.

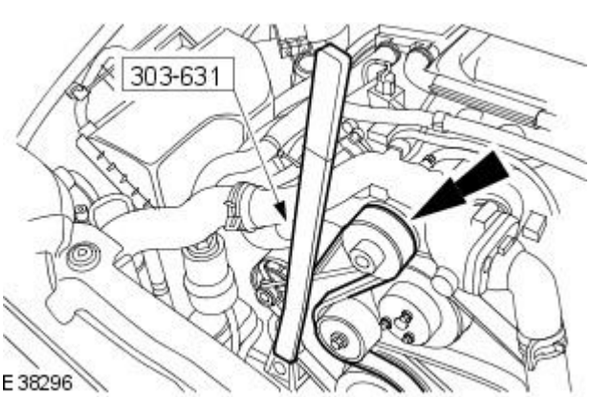

16. NOTE: Twin fan and motor assembly shown removed for clarity

Using the special tool, detach the the supercharger drive belt.

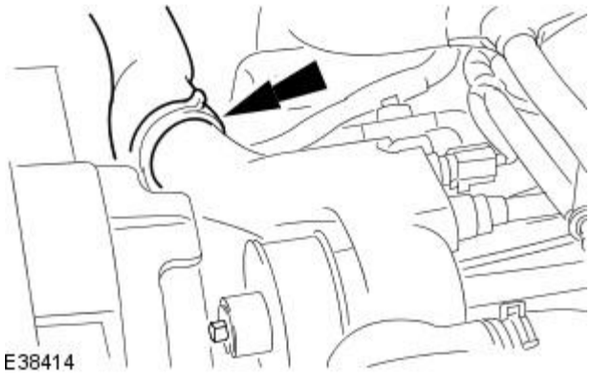

17. Disconnect the radiator to thermostat housing coolant hose.

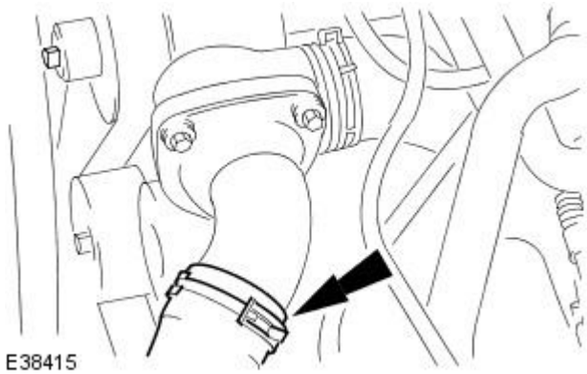

18. Detach the radiator to thermostat housing cover coolant hose.

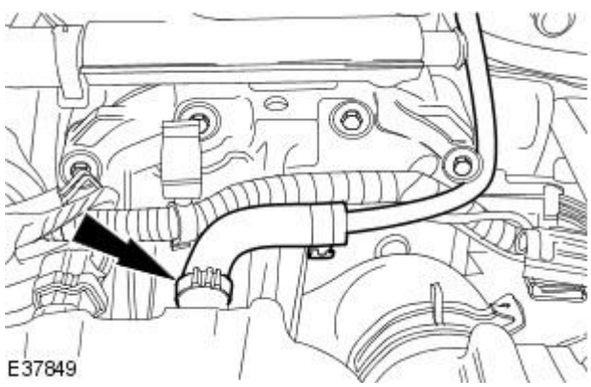

19. Disconnect the expansion tank to thermostat housing coolant hose.

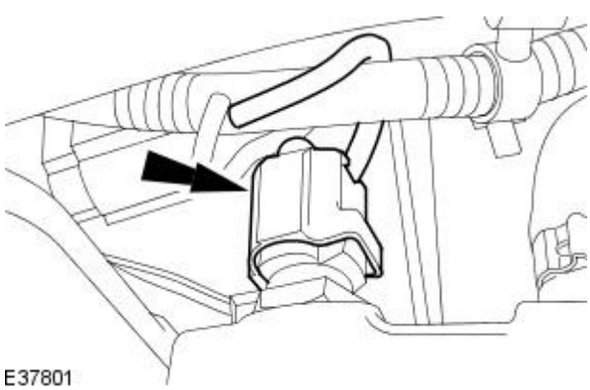

20. Disconnect the engine coolant temperature (ECT) sensor electrical connector.

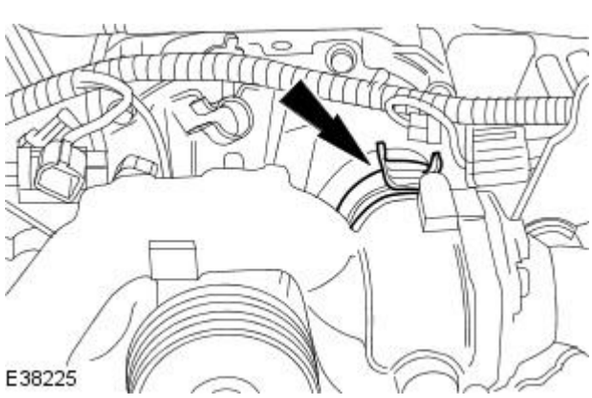

21. Reposition the coolant hose retaining clip.

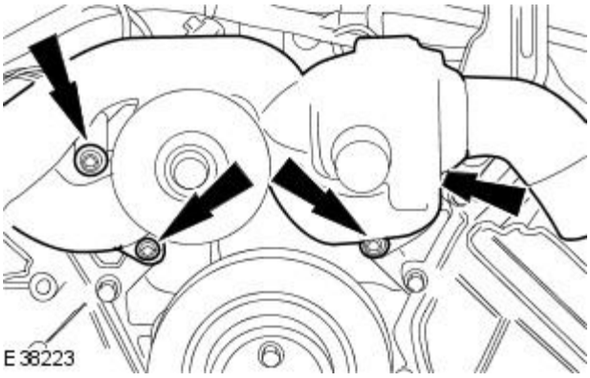

22. Detach the thermostat housing.

- Remove and discard the thermostat housing seals.

23. Remove the thermostat housing.

- Detach the heater core to thermostat housing coolant hose.
- Remove the thermostat housing.

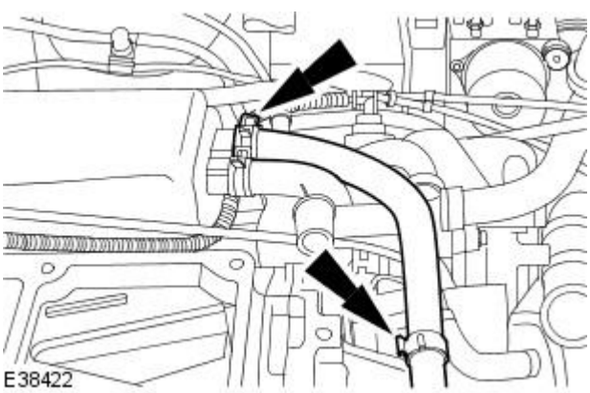

24. Disconnect the charge air cooler to supercharger water pump coolant hose.

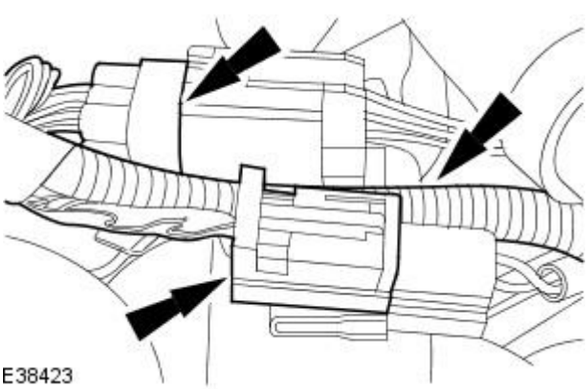

25. Detach the engine wiring harness from the engine wiring harness retaining bracket.

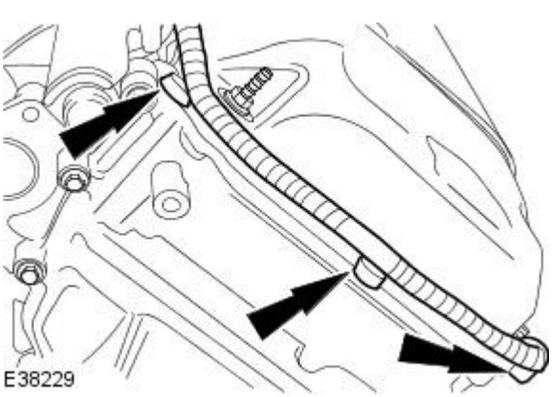

26. Detach the engine wiring harness from the left-hand valve cover.

27. Reposition engine wiring harness to enable the supercharger to be removed.

28. Remove the supercharger.

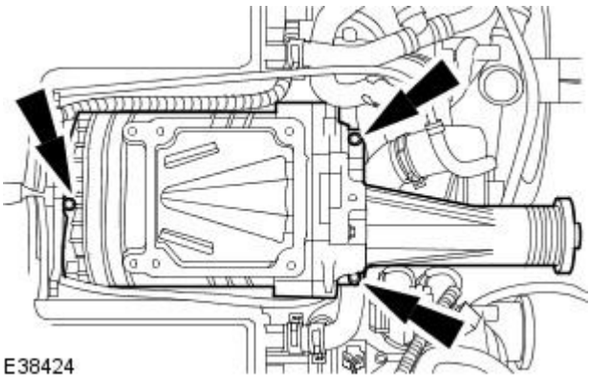

Installation

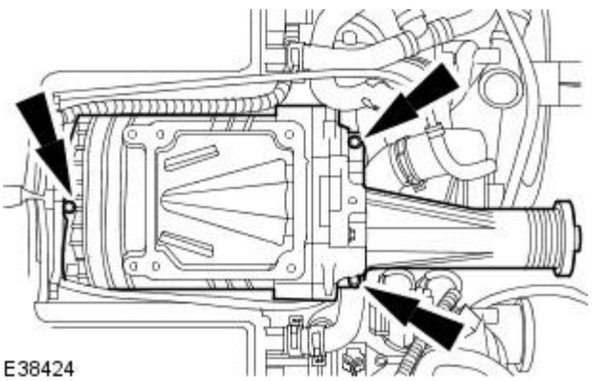

1. CAUTION: Make sure the supercharger to cylinder block spacer plate is correctly aligned before installing the supercharger. Failure to carry out this instruction may result in damage to the vehicle.

Install the supercharger.

- Tighten to 24 Nm.

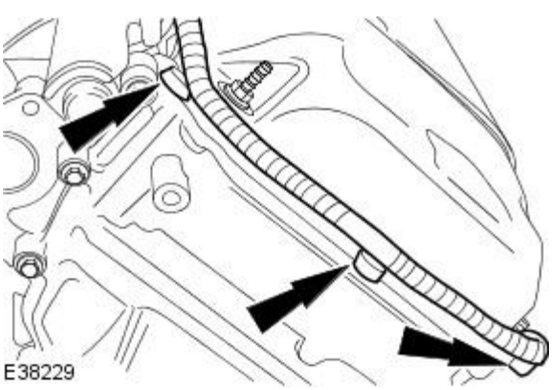

2. Attach the engine wiring harness to the left hand valve cover.

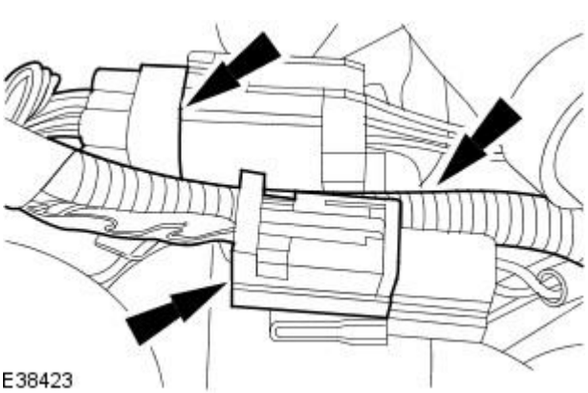

3. Attach the engine wiring harness to the engine wiring harness retaining bracket.

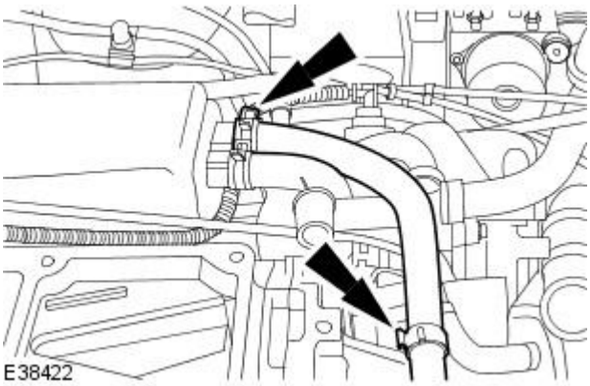

4. Connect the charge air cooler to supercharger water pump coolant hose.

5. NOTE: Install new coolant pipe seals.

Install the thermostat housing.

- Attach the heater core to thermostat housing coolant hose.
- Install the heater core to thermostat housing.

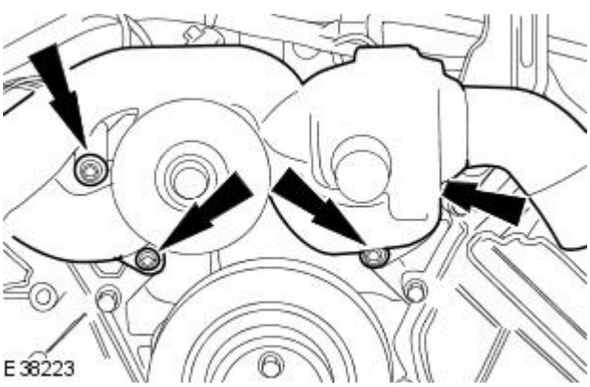

6. Attach the thermostat housing.

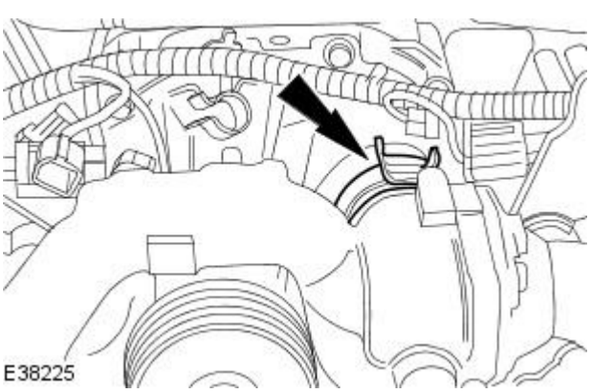

7. Reposition the coolant hose retaining clip.

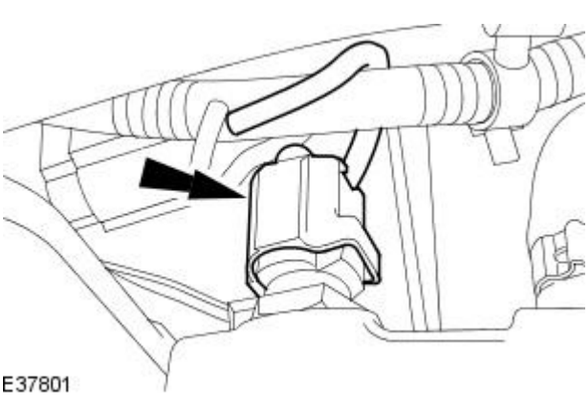

8. Connect the ECT sensor electrical connector.

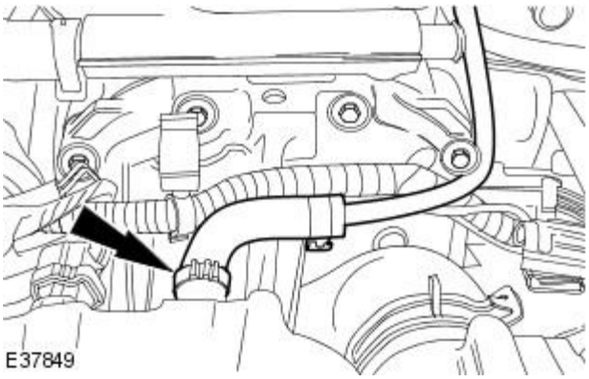

9. Connect the expansion tank to thermostat housing coolant hose.

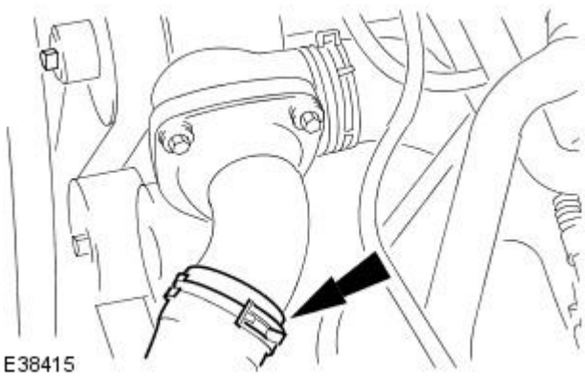

10. Connect the radiator to thermostat housing cover coolant hose.

11. Connect the radiator to thermostat housing coolant hose.

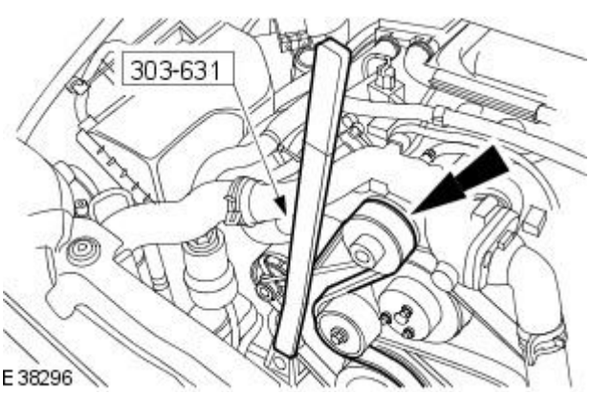

12. NOTE: Twin fan and motor assembly shown removed for clarity.

Using the special tool, attach the supercharger belt.

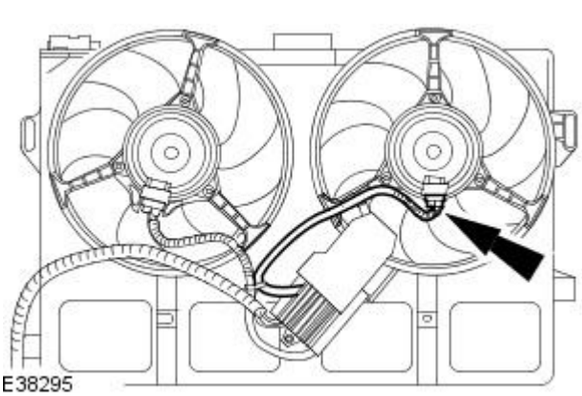

13. NOTE: Twin fan and motor assembly shown removed for clarity.

Connect the right-hand cooling fan electrical connector.

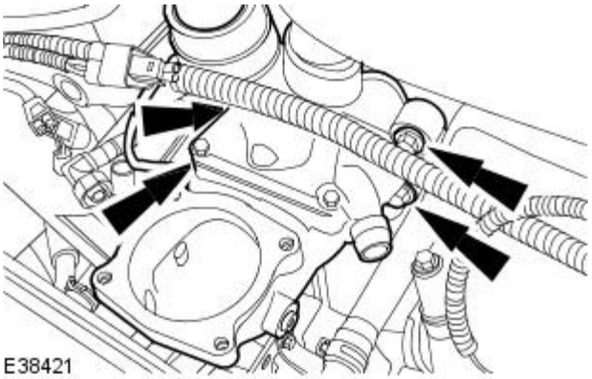

14. NOTE: Install new throttle body elbow retaining bolt seals.

• NOTE: Install a new throttle body elbow gasket.

Install the throttle body elbow.

- Tighten to 24 Nm.

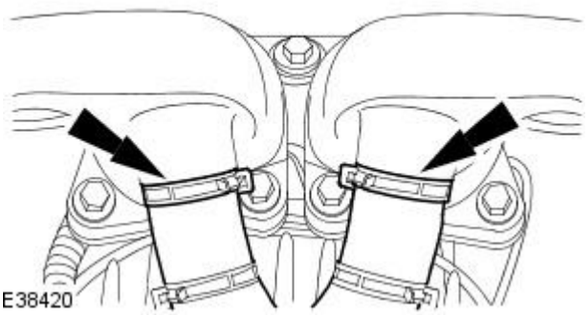

15. Reposition the charge air cooler hose retaining clips.

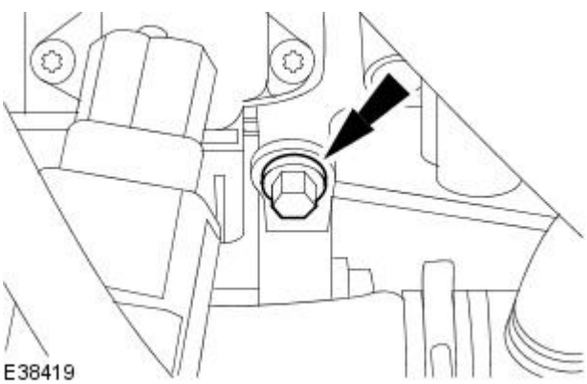

16. Install the left-hand throttle body elbow retaining bolt.

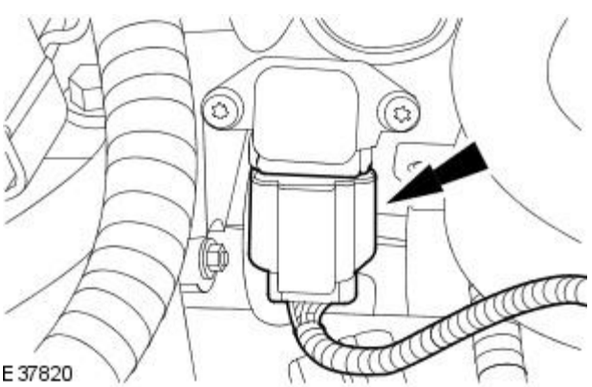

17. Connect the MAP sensor electrical connector.

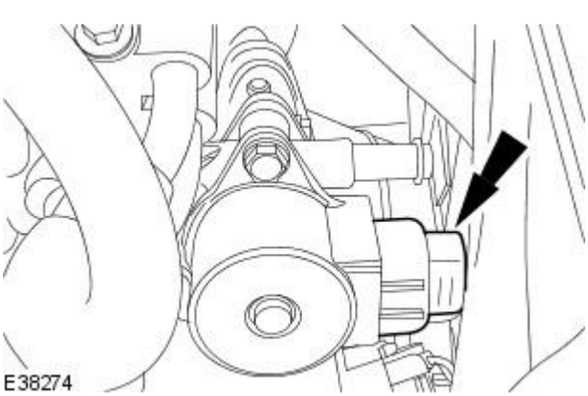

18. Connect the EGR valve electrical connector.

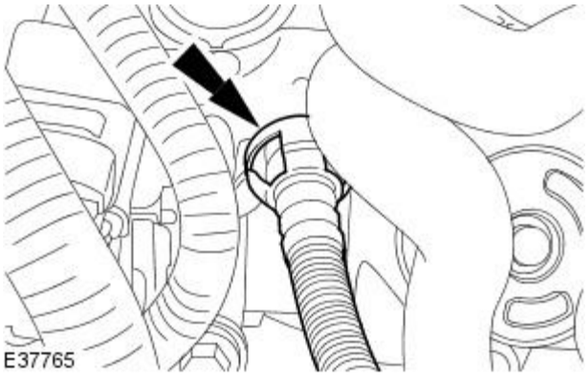

19. Connect the evaporative emission purge valve tube.

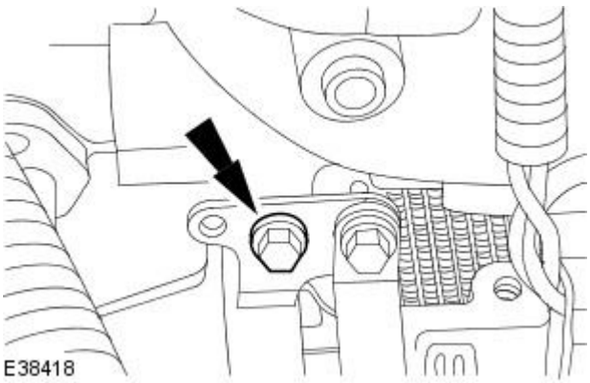

20. Install the left-hand throttle body elbow retaining bolt.

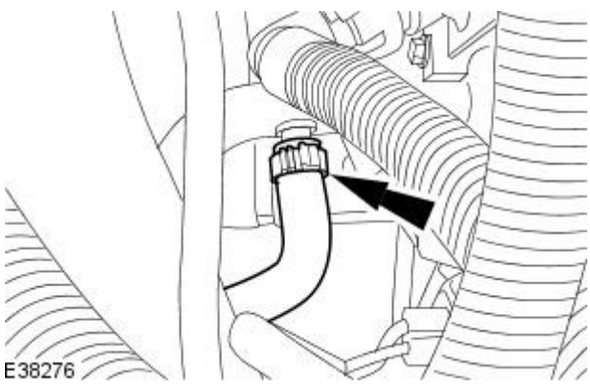

21. NOTE: Install a new coolant hose retaining clip.

Connect the EGR valve to heater core inlet coolant hose.

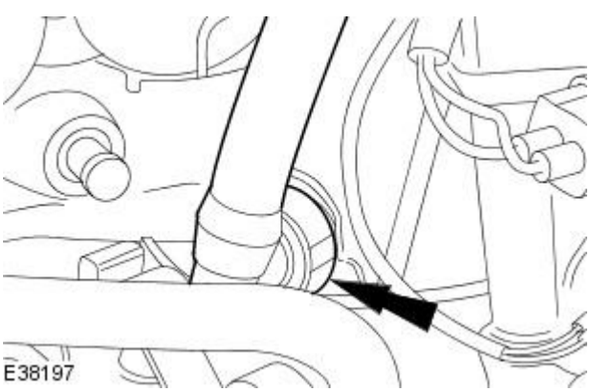

22. Connect the crankcase ventilation tube.

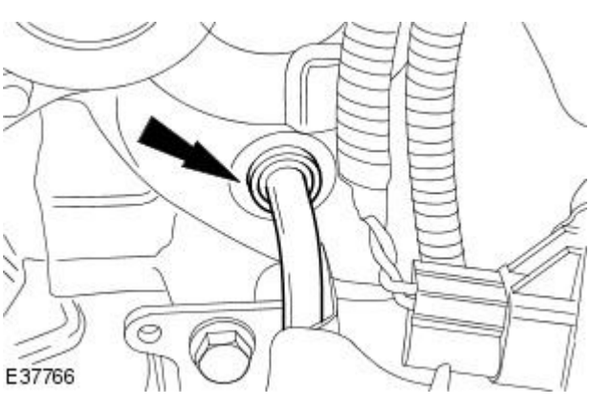

23. Connect the brake booster vacuum hose.

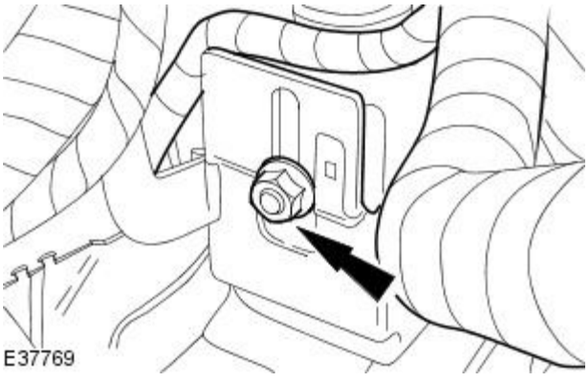

24. Attach the engine wiring harness retaining nut.

25. Install the supercharger outlet pipe.
For additional information, refer to Supercharger Outlet Pipe - in this section.

26. Install the exhaust manifold to exhaust gas recirculation (EGR) valve tube.
For additional information, refer to Section 303-08 Engine Emission Control.

27. Install the throttle body.
For additional information, refer to Section 303-04 Fuel Charging and Controls.

Intake Air Distribution and Filtering - Supercharger Outlet Pipe

Removal and Installation

Removal

1. Disconnect the battery ground cable.
   For additional information, refer to Section 414-01 Battery, Mounting and Cables.
2. Remove the air cleaner outlet pipe.
   For additional information, refer to Air Cleaner Outlet Pipe - in this section.
3. Drain the cooling system. For additional information, refer to Section 303-03A Engine Cooling / 303-03B Supercharger Cooling.
4. Detach the coolant hoses.

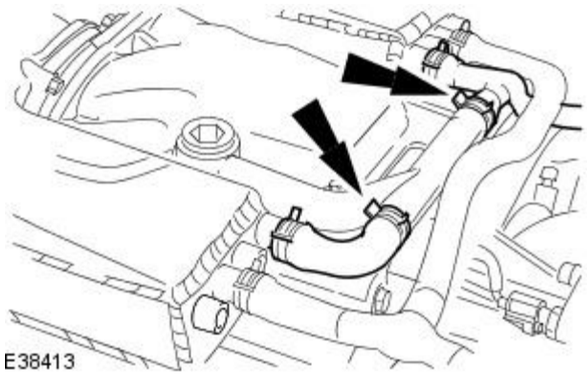

E38413

5. Disconnet the vacuum hose.

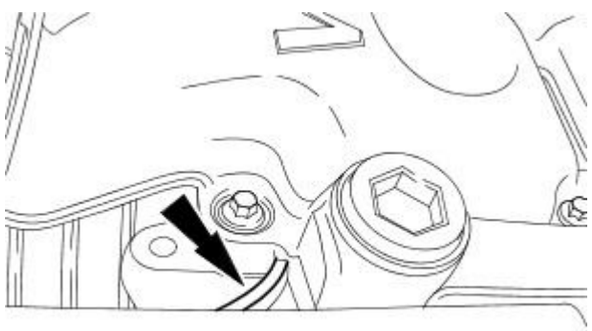

E38253

6. NOTE: Engine shown removed for clarity.

   Remove the supercharger outlet pipe to charge air cooler intake assembly retaining bolts.

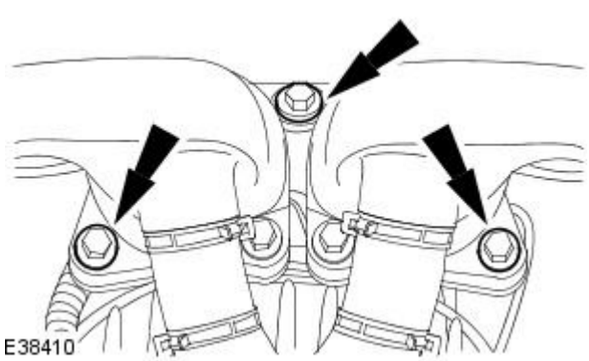

E38410

7. CAUTION: Make sure no foreign matter enters the supercharger.

   Remove the supercharger outlet pipe.

   - Remove and discard the supercharger outlet pipe gasket.
   - Remove and discard the supercharger outlet pipe retaining bolt seals.

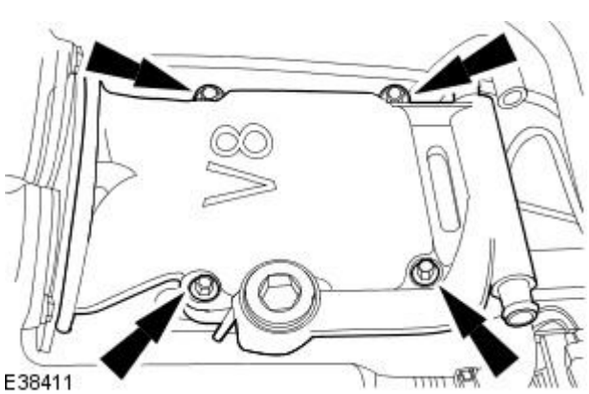

E38411

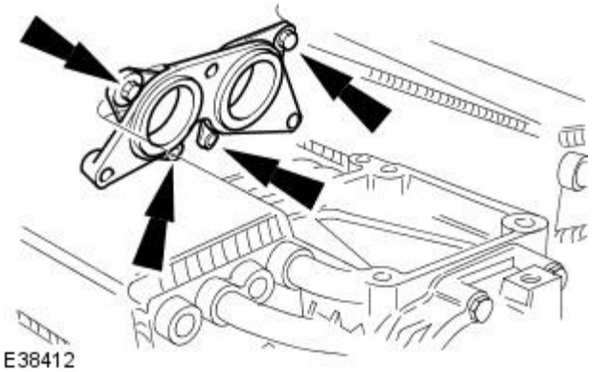

8. Remove the charge air cooler intake assembly.

- Remove and discard the charge air cooler intake seals.

Installation

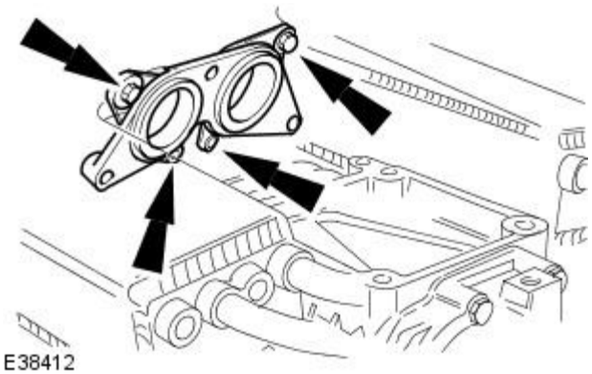

1. NOTE: Install new charge air cooler intake seals.

Install charge air cooler intake assembly.

- Tighten to 21 Nm.

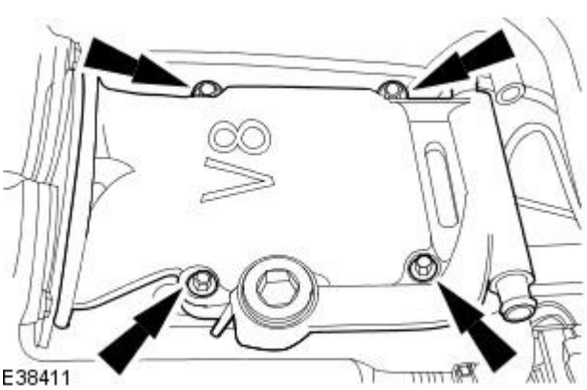

2. CAUTION: Make sure no foreign matter enters the supercharger.

• NOTE: Install new supercharger outlet pipe retaining bolt seals.

• NOTE: Install a new supercharger outlet pipe gasket.

Install the supercharger outlet pipe.

- Tighten to 10 Nm.

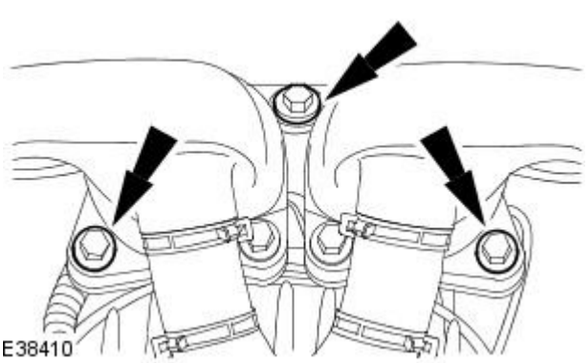

3. NOTE: Engine shown removed for clarity

Install the supercharger outlet pipe to charge air cooler intake assembly retaining bolts.

- Tightnen to 21 Nm.

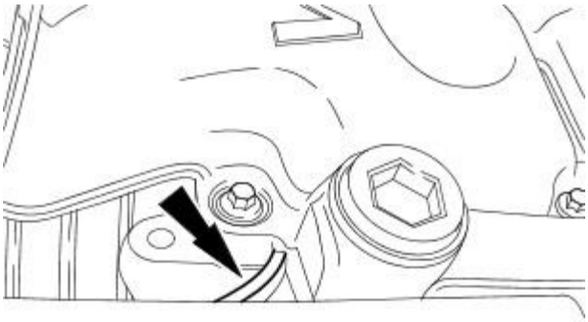

E38253

4. Connect the vacuum hose.

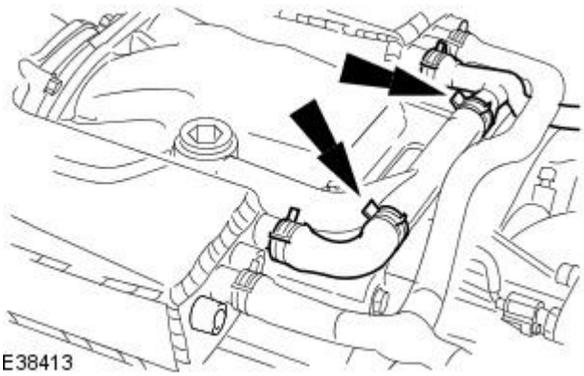

E38413

5. Connect the coolant hoses.

6. Fill the cooling system. For additional information, refer to Section 303-03A Engine Cooling / 303-03B Supercharger Cooling.

7. Install the air cleaner outlet pipe.
For additional information, refer to Air Cleaner Outlet Pipe - in this section.

8. Connect the battery ground cable.
For additional information, refer to Section 414-01 Battery, Mounting and Cables.

Evaporative Emissions -

Torque Specifications

Description	Nm	lb-ft	lb-in
Evaporative emission canister retaining bolts	6	-	53
Evaporative emission canister vent solenoid retaining nut	6	-	53

Published: 11-May-2011

Evaporative Emissions - Evaporative Emissions

Description and Operation

To reduce the emission of fuel vapour, the fuel tank is vented to atmosphere through activated evaporative emission canisters which collect the fuel vapor. The evaporative emission canister is periodically purged of fuel vapor when the evaporative emission canister purge valve opens the vapor line between the evaporative emission canister and the air intake induction elbow. This action allows manifold depression to draw air through the evaporative emission canister atmospheric vent, taking up the deposited fuel vapor from the charcoal adsorber inside the evaporative emission canister and burning the resulting fuel vapor in the engine.

There are two variants of the evaporative emissions system. All systems use the charcoal adsorber storage evaporative emission canisters and purge valve and operate as described above. The specific features of each system are described below. The evaporative systems are designated as:

- Vehicles with on-board refueling vapor recovery
- Vehicles without on-board refueling vapor recovery

Evaporative Emissions Canister Purge Valve

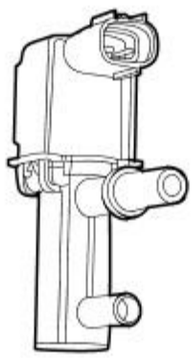

E38187

The evaporative emission canister purge valve controls the flow rate of fuel vapor drawn into the engine during the canister purge operation. The valve is operated via inputs from the engine control module (ECM).

With no ECM signal applied to the valve solenoid, the valve remains closed.

Canister Purge Operation

The following pre-conditions are necessary for purging to commence:

- after battery disconnection/reconnection, engine management adaptations must be re-instated.
- engine has run for at least 8 seconds.
- engine coolant temperature is not less than 70°C.
- engine not running in the fuel cut off condition (eg overrun).
- the adaptive fuel correction function has not registered a rich or lean failure.
- the evaporative emission leak test has not failed.
- no faults have been diagnosed in the relevant sensor and valve circuits - mass air flow (MAF) sensor, engine coolant temperature (ECT) sensor, evaporative canister purge valve and evaporative emission canister vent solenoid.

If these conditions have been satisfied, purging is started. If any failures are registered, purging is inhibited.

The canisters are purged during each drive cycle at various rates in accordance with the prevailing engine conditions. The engine management software stores a map of engine speed (RPM) against engine load (grams of air inducted/rev). For any given engine speed and load, a vapor purge rate is assigned (purge rate increases with engine speed and load).

The preset purge rates are based on the assumption of a vapor concentration of 100%. The actual amount of vapor is measured by the closed loop fueling system: the input of evaporative fuel into the engine causes the outputs from the upstream oxygen sensors to change, the amount of change providing a measure of the vapor concentration. This feedback causes the original purge rate to be adjusted and also reduces the amount of fuel input via the injectors to maintain the correct air to fuel ratio.

Engine speed/load mapping and the corresponding purge rates are different for vehicles with on-board refueling vapor recovery and vehicles without on-board refueling vapor recovery .

Vehicles With On-board Refueling Vapor Recovery.

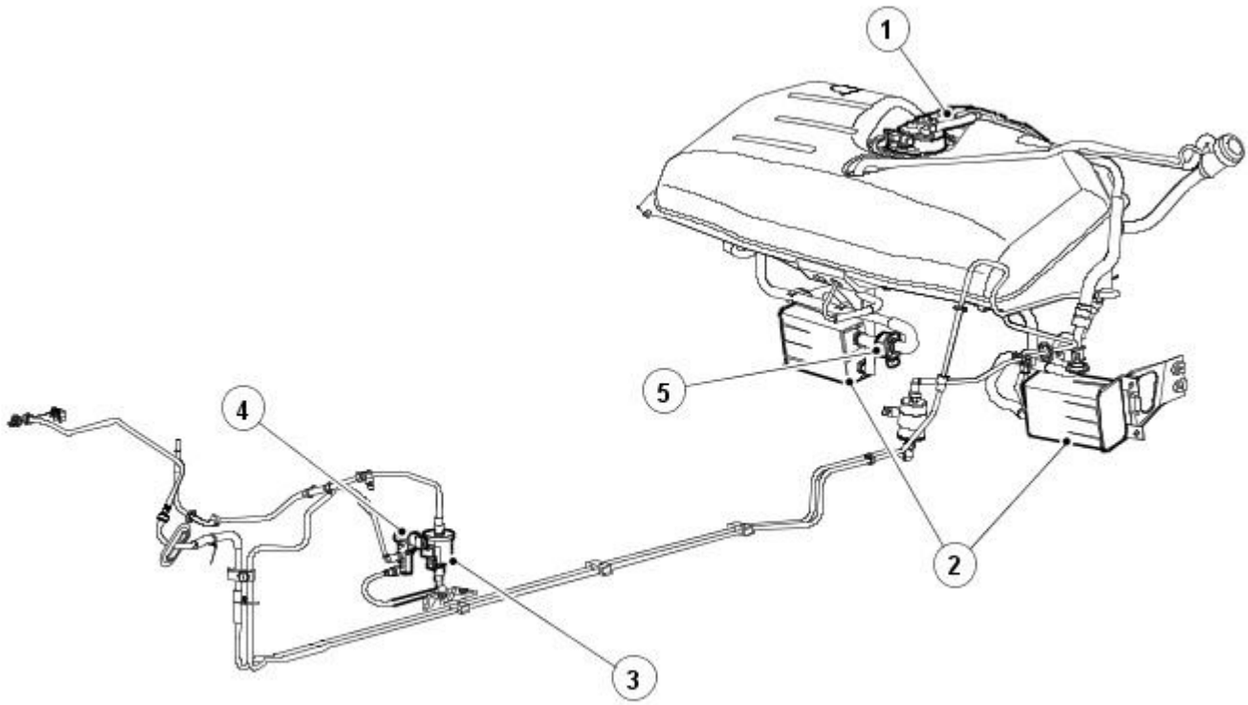

E38190

Item	Part Number	Description
1	—	Fuel level vent valve housing
2	—	Evaporative emission canisters
3	—	Evaporative emission canister purge valve resonator
4	—	Evaporative emission canister purge valve
5	-	Evaporative emission canister vent solenoid

The system has the following features :

- on-board refueling vapor recovery to reduce the fuel vapor vented directly to atmosphere from the filler nozzle when refueling.
- a fuel tank pressure sensor and an evaporative emission canister vent solenoid are fitted to allow the on-board diagnostic facility to test for leaks in the fuel and evaporative system.

The evaporative emission canister vent solenoid is a solenoid operated device controlled by the ECM. The valve is normally open and is closed only during the leak test sequence.

The fuel tank pressure sensor is fitted to the fuel vapor vent valve housing and provides a voltage to the ECM which is proportional to tank vapor pressure.

Operation Of On-board Refueling Vapor Recovery

The on-board refueling vapor recovery system enables fuel vapor generated during refueling to be collected by the charcoal canisters. During normal running of the vehicle, the vapor is collected and purged in the same way as for vehicles without on-board refueling vapor recovery.

The on-board refueling vapor recovery system features are:

- Narrow fuel filler pipe and tank check valve.
- Fuel level vent valve fitted to the fuel vapor vent valve housing and consisting of a two stage shut-off valve with rollover protection and a pressure relief valve.
- Grade vent valve with rollover protection, fitted to the fuel vapor vent valve housing and with an outlet pipe connected to the fuel level vent valve vapor outlet pipe.
- Large bore vapor vent pipes.

The fuel filler pipe has a reduced diameter between the nozzle guide and the tank, providing a liquid seal when refueling and preventing the fuel vapor venting directly to atmosphere. There is no breather tube fitted between the tank and the filler nozzle. To prevent spit back when refueling, a check valve is fitted at the lower end of the filler pipe inside the tank.

During refueling, the tank is vented via the fuel level vent valve, large bore vapor pipes and the charcoal canisters. The fuel level vent valve incorporates a float valve which is closed by the rising fuel level, creating a back pressure and causing the fuel delivery to stop. In the closed position, the fuel level vent valve also sets the fuel level.

With the fuel level vent valve closed (tank full), any increase in pressure or overfilling is relieved by a separate rollover protected grade vent valve. The outlet from this valve feeds into the main fuel level vent valve vapor outlet pipe, by-passing the closed fuel level vent valve.

When the fuel level is below full, the fuel level vent valve opens to allow unrestricted venting via the canisters.

A pressure relief valve is incorporated into the fuel level vent valve assembly and has an outlet pipe to the filler nozzle. If a blockage or other restriction (eg, evaporative emission canister vent solenoid in the closed position) occurs in the vapor vent system, the pressure relief valve opens to allow venting to atmosphere via the filler nozzle guide and fuel filler cap.

Canister purge operation is as described in Evaporative Emissions.

Fuel Vapor Vent Valve Housing - Vehicles With On-Board Refueling Vapor Recovery

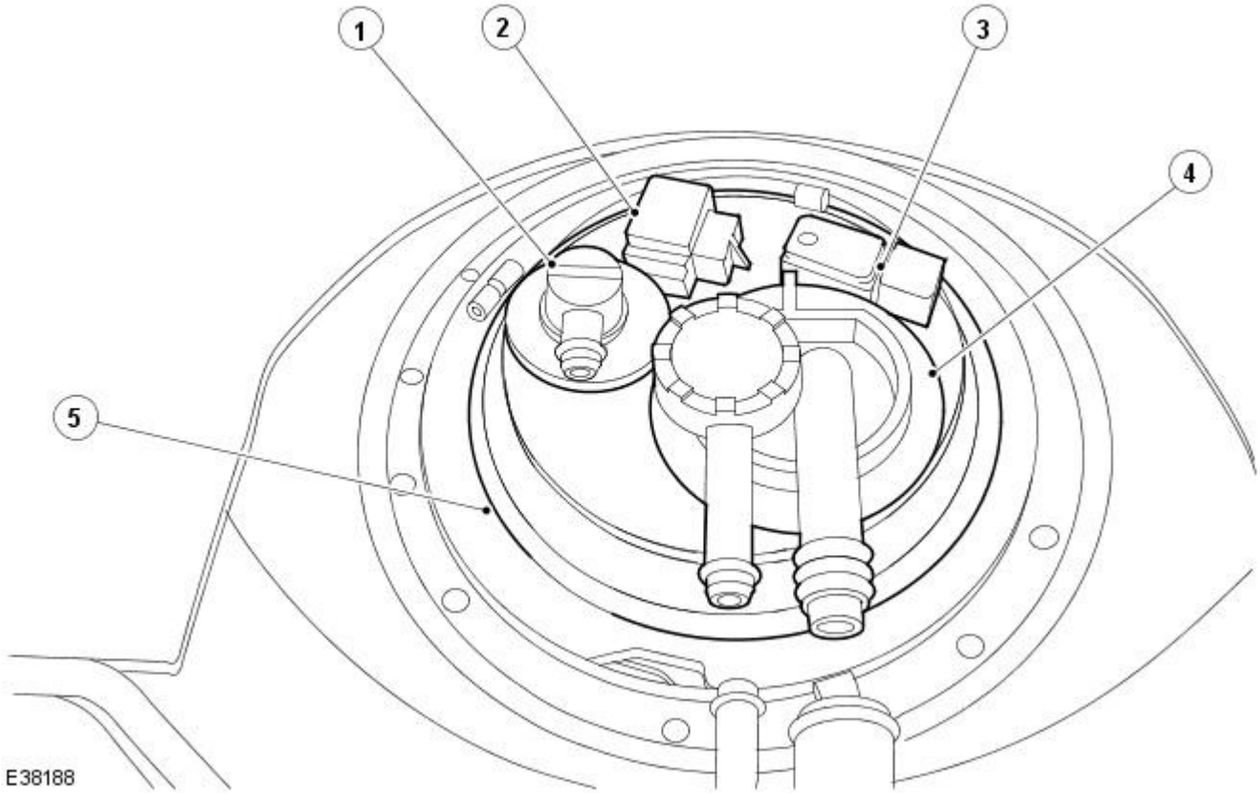

Item	Part Number	Description
1	—	Grade vent valve
2	—	Fuel pump module electrical connector
3	—	Fuel tank pressure sensor
4	—	Fuel level vent valve
5	—	Fuel vapor vent valve housing locking ring

The fuel vapor vent valve housing is fitted to the top of the tank via a seal and locking ring arrangement identical to that used for vehicles without on-board refueling vapor recovery. The fuel vapor vent valve housing is removable complete with the fitted components.

The fuel level vent valve is mounted in the fuel vapor vent valve housing via a bayonet fitting. It is turned approximately 90° clockwise to release. The grade vent valve and pressure sensor are push in fits via sealing grommets. Note that, due to the tight fit, removal of these components may require cutting the grommets. The fuel pump/sender electrical connector is push fitted and crimped into a location tube on the underside of the flange.

Evaporative Emission Canister, Evaporative Emission Canister Vent Solenoid and Fittings

The evaporative emission canisters are fixed to the underside of the vehicle either via semi-enclosed mounting brackets. Two fixing bolts are used at the front of the bracket and a single rear bolt supports the evaporative emission canister and the evaporative emission canister vent solenoid.

The vapor pipes to the canisters, other than the evaporative emission canister vent solenoid, use multi-tang connectors which are push fitted and pulled out without the use of tools.

The evaporative emission canister vent solenoid has a stub pipe with 'O' ring seal which is a simple push fit into the canister. A mounting bracket on the evaporative emission canister vent solenoid enables it to be secured to the underbody via the canister rear mounting bolt.

Standard Federal Testing Procedures (SFTP) Test Port

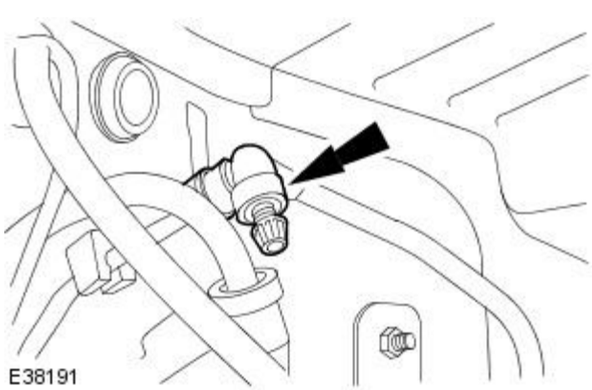

To comply with Standard Federal Testing Procedures (SFTP) a test port is provided in the evaporative emission canisters to purge valve resonator line to enable leak test diagnosis of the fuel system.

Vehicles Without On-board Refueling Vapor Recovery.

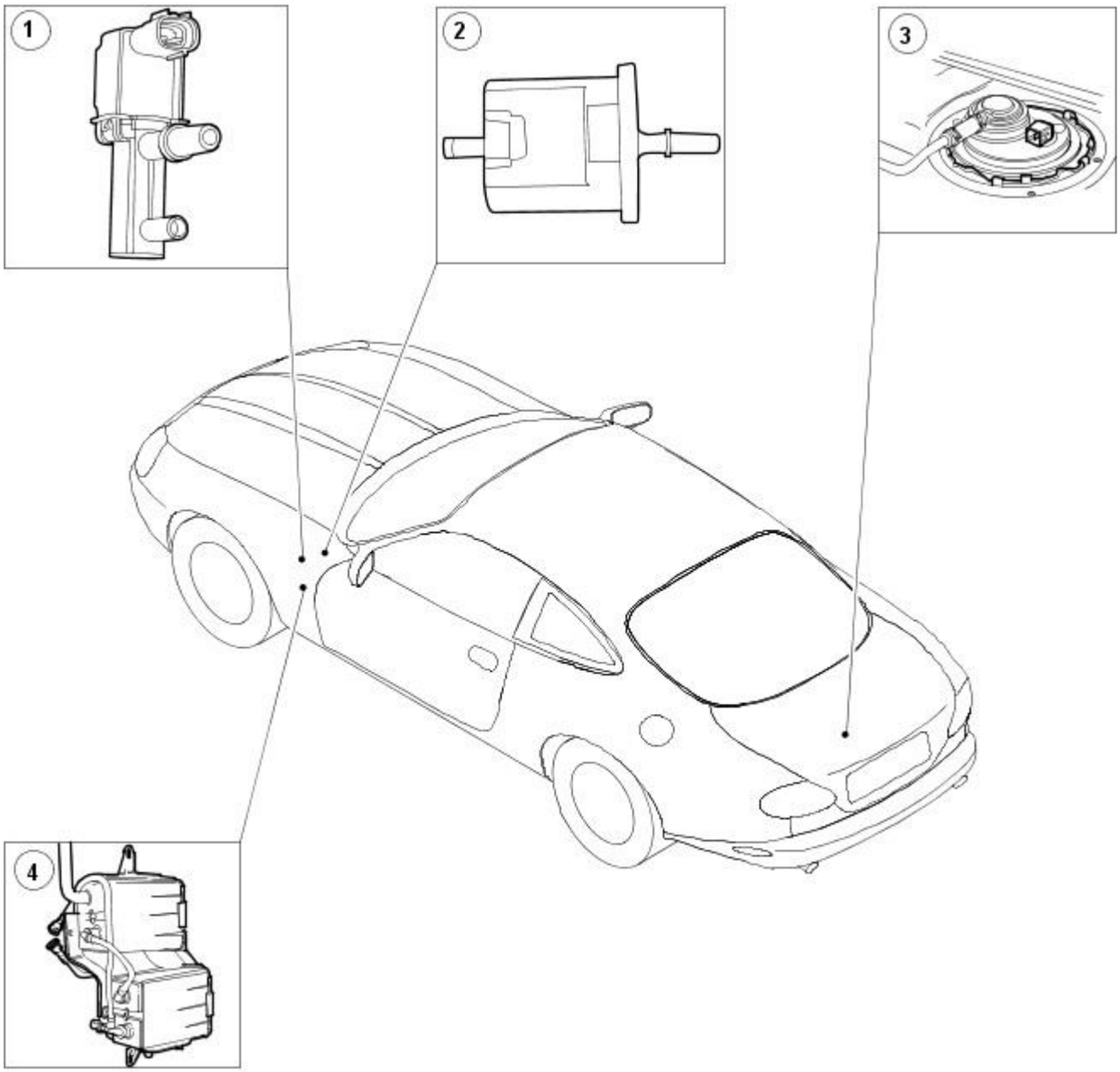

E38189

Item	Part Number	Description
1	-	Evaporative emission canister purge valve
2	-	Evaporative emission canister purge valve resonator
3	-	Fuel vapor vent valve housing
4	-	Evaporative emission canisters

This system uses two evaporative emission canisters. The vapor outlet from the fuel tank is taken via a rollover valve fitted to the removable flange at the top of the tank.

Canister purge operation is as described in Evaporative Emissions.

Fuel Vapor Vent Valve Housing - Vehicles Without On-board Refueling Vapor Recovery

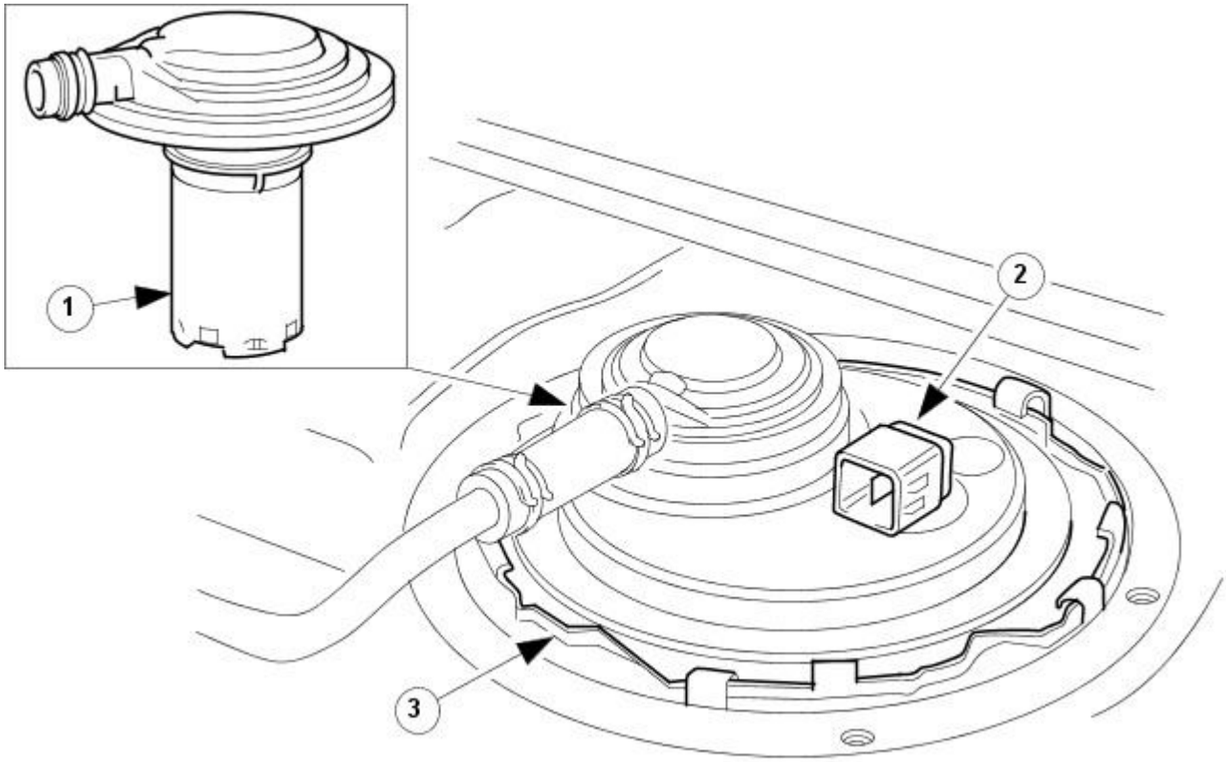

E32545

Item	Part Number	Description
1	—	Fuel vapor vent valve
2	—	Fuel pump module electrical connector connector
3	—	Fuel vapor vent valve housing locking ring

The fuel vapor vent valve housing is fitted to the top of the tank via a seal and locking ring. The assembly is removable complete with the fitted components.

The fuel vapor vent valve is a push fit via a sealing grommet. The fuel pump module electrical connector is push fitted and crimped into a location tube on the underside of the flange.

Published: 11-May-2011

Evaporative Emissions - Evaporative Emissions

Diagnosis and Testing

Preliminary Inspection

1. **1.** Visually inspect for obvious signs of mechanical or electrical damage, blown fuses, etc.
2. **2.** If an obvious cause for an observed or reported concern is found, correct the cause (if possible) before proceeding to the next step.
3. **3.** If the concern is not visually evident, verify the symptom and proceed with diagnosis, using the Jaguar approved diagnostic system, where available.
4. **4.** Where K-Line or Vacutec equipment is available, it should be used as an aid to diagnosis. The equipment must be capable of testing to the 0.020 thou standard.

Diagnostic Drive Cycles

Following the setting of a DTC, the appropriate repairs must be carried out, and the normal operation of the system checked. This will be done by performing a series of drive cycles which will enable the vehicle to operate the Evaporative Emissions system as a function check. The following drive cycles cover the use of the Jaguar approved diagnostic system, GDS510 instrument, and a test with no additional equipment, where possible.

Flow check monitor drive cycle conditions (non-Federal)

• NOTE: These conditions must be satisfied before the test is commenced.

This drive cycle should be performed following rectification work on the system.

- Make sure the fuel tank is between one third and three quarters full. (Adding fuel will increase vapor generation; the diagnostic will not run if the vapor concentration is too great).
- Make sure the ambient air temperature is above -5°C (23°F).

Flow check monitor drive cycle (non-Federal)

- Drive the vehicle for a minimum of 15 minutes, avoiding severe or excessive fuel movement.
- Avoiding excessive fuel movement, gently bring the vehicle to rest. (Coast to a stop).
- Allow the vehicle to idle for two minutes.

Full Evaporative system monitor drive cycle conditions

• NOTE: These conditions must be satisfied before the test is commenced.

- Make sure the fuel filler cap is correctly fitted.
- Clear the DTCs. (Perform a code clear, even if no codes are present. This will reset TIDs).
- Make sure the fuel tank is between one third and three quarters full. (Adding fuel will increase vapor generation; the diagnostic will not run if the vapor concentration is too great).
- Drive the vehicle for a minimum of two minutes, and until fully warm. (Temperature gauge just below mid-point).
- Make sure that the purge valve is operating, either by touch, sound, or using datalogger. (Purge vapor management valve-duty cycle).
  - If the purge is not active, perform the "Drive cycle for green ECM" in this section.

Full Evaporative system monitor drive cycle

- Drive the vehicle to a suitable road where the test can be carried out, switch off the ignition.
- Leave the ignition switched off for 30 seconds.
- Restart the engine, accelerate briskly to 80 Kilometres per hour (50 miles per hour), making sure that the engine speed reaches at least 3500 RPM for a minimum of five seconds.

40 thou test, using the Jaguar approved diagnostic system

- Avoiding high engine loads, drive the vehicle steadily between 64 and 97 Kilometres per hour. (40 and 60 miles per hour). Using the Jaguar approved diagnostic system, monitor the Evaporative valve duty cycle (Purge vapor management valve-duty cycle), CCV status (Canister close valve-vapor recovery system), and the FTPS (Fuel tank pressure-vapor recovery system). The Jaguar approved diagnostic system will give an indication when the test is active. Dependant on the level of vapor concentration, it may take up to 30 minutes for the test to initialise. (Vapor concentration cannot be measured using the Jaguar approved diagnostic equipment). When the test has initialised (CCV closed), it will take up to 90 seconds to complete. Avoid excessive fuel movement while the test is active.

20 thou test, using the Jaguar approved diagnostic system

- Continue driving the vehicle steadily between 64 and 97 Kilometres per hour. (40 and 60 miles per hour). avoiding high engine loads for a further 10 minutes.
- Avoiding excessive fuel movement, gently bring the vehicle to rest. (Coast to a stop).
- Allow the vehicle to idle for 2 minutes.
- Use the Jaguar approved diagnostic system to monitor the Evaporative valve duty cycle (Purge vapor management valve-duty cycle), CCV status (Canister close valve-vapor recovery system), and the FTPS (Fuel tank pressure-vapor recovery system). The Jaguar approved diagnostic system will give an indication when the test is active. When the test has initialised (CCV closed), it will take up to 90 seconds to complete.

If the 20 thou test has not run, it is likely that the vapor concentration in the purge system is too great. In this case, carry out the following -

- Drive the vehicle steadily for a further 30 minutes, avoiding excessive fuel movement.
- Avoiding excessive fuel movement, gently bring the vehicle to rest. (Coast to a stop).
- Allow the vehicle to idle for 2 minutes.
- Use the Jaguar approved diagnostic system to monitor the Evaporative valve duty cycle (Purge vapor management valve-duty cycle), CCV status (Canister close valve-vapor recovery system), and the FTPS (Fuel tank pressure-vapor recovery system). The Jaguar approved diagnostic system will give an indication when the test is active. When the test has initialised (CCV closed), it will take up

to 90 seconds to complete.

If the 20 thou test fails to run a second time, repeat the entire test.

- Check for DTCs. Rectify as indicated.

40 thou test, using GDS510

- Avoiding high engine loads, drive the vehicle steadily between 64 and 97 Kilometres per hour. (40 and 60 miles per hour)
- When the test has initialised, using the GDS510, monitor the Evaporative valve duty cycle, CCV status, and the FTPS. (The GDS510 will give an indication when the test is active).
- When the test has initialised (CCV closed), it will take up to 90 seconds to complete.
- To make sure that the test has completed, TID 08 in mode 6 must be checked. (If the test has not completed, this TID will display 0. Any other value indicates test completion).
- If the test did not complete, repeat the test.

20 thou test, using GDS510

- Continue driving the vehicle steadily between 64 and 97 Kilometres per hour. (40 and 60 miles per hour) avoiding high engine loads for a further 10 minutes.
- Avoiding excessive fuel movement, gently bring the vehicle to rest. (Coast to a stop).
- Allow the vehicle to idle for 2 minutes.
- When the test has initialised, using the GDS510, monitor the Evaporative valve duty cycle, CCV status, and the FTPS. (The GDS510 will give an indication when the test is active).
- When the test has initialised (CCV closed), it will take up to 90 seconds to complete.
- To make sure that the test has completed, TID 06 in mode 6 must be checked. (If the test has not completed, this TID will display 0. Any other value indicates test completion).
- If the test did not complete, repeat the test.
- If the 20 thou test has not run, it is likely that the vapor concentration in the purge system is too great. In this case, drive the vehicle steadily for a further 30 minutes, avoiding excessive fuel movement, then repeat the test.
- Check for DTCs. Rectify as indicated.

40 thou and 20 thou tests using no additional equipment

The test procedure and conditions are as for the Jaguar approved diagnostic system or GDS510, but no confirmation of the test having run is possible without the use of one of these instruments. The DTC will be set if the fault still exists, but the possibility exists that the conditions for the test to run may not have been met, in which case, the DTC may not be set until the owner reproduces the conditions in which the fault originally occurred.

Drive cycle for "green" ECM

- To enable the ECM to re-learn fuelling adaptions.

• NOTE: This procedure should be performed whenever the vehicle battery has been disconnected.

Due to component tolerance and wear during the normal running of a vehicle, fuelling and air requirements for an engine will vary over time. The ECM has the ability to adjust for this variation by "learning" the level of compensation that is required. (These compensation values are referred to as adaptions)

If the vehicle battery is disconnected, all adaptions held within the ECM will be lost (ie, set to Zero) The ECM is then referred to as "green". To enable the vehicle to function correctly, the ECM must "relearn" these adaptions.

There are four areas or sites that need to be relearnt.

- Allow the vehicle to idle until fully warm. (Temperature gauge just below mid-point).
- Allow to idle for a further three minutes, minimum.
- Drive the vehicle with the air conditioning OFF on a level road using a constant throttle, or speed control if fitted, for at least one minute in the following gears, at the stated engine speeds for each of the sites below.

"Green" ECM drive cycle chart. Site 1

• NOTE: The vehicle speed is for guidance only. DO NOT use the vehicle speed as the target to set adaptions.

Monitor condition	Vehicles without supercharger	Vehicles with supercharger
GEAR	P	P
ENGINE SPEED	Idle	Idle
VEHICLE SPEED (GUIDE ONLY)	0MPH	0MPH

"Green" ECM drive cycle chart. Site 2

• NOTE: The vehicle speed is for guidance only. DO NOT use the vehicle speed as the target to set adaptions.

Monitor condition	Vehicles without supercharger	Vehicles with supercharger
GEAR	2	2
ENGINE SPEED	1337	1337
VEHICLE SPEED (GUIDE ONLY)	17.6 kph (11.0 mph)	17.6 kph (11.0 mph)

"Green" ECM drive cycle chart. Site 3

• NOTE: The vehicle speed is for guidance only. DO NOT use the vehicle speed as the target to set adaptions.

Monitor condition	Vehicles without supercharger	Vehicles with supercharger
GEAR	2	2
ENGINE SPEED	1853	1853
VEHICLE SPEED (GUIDE ONLY)	30.4 kph (19.0 mph)	30.4 kph (19.0 mph)

"Green" ECM drive cycle chart. Site 4

• NOTE: The vehicle speed is for guidance only. DO NOT use the vehicle speed as the target to set adaptions.

Monitor condition	Vehicles without supercharger	Vehicles with supercharger

Monitor condition	Vehicles without supercharger	Vehicles with supercharger
GEAR	3	3
ENGINE SPEED	2013	2013
VEHICLE SPEED (GUIDE ONLY)	52.8 kph (33.0 mph)	52.8 kph (33.0 mph

"Green" ECM drive cycle chart. Site 5

• NOTE: The vehicle speed is for guidance only. DO NOT use the vehicle speed as the target to set adaptions.

Monitor condition	Vehicles without supercharger	Vehicles with supercharger
GEAR	3	3
ENGINE SPEED	2492	2492
VEHICLE SPEED (GUIDE ONLY)	65.6 kph (41.0 mph)	65.6 kph (41.0 mph)

Bring the vehicle to rest, allow to idle for one minute.

WARNING: The following tests may involve parts which are hot.

If sufficient adaptions have occurred, the Evaporative valve should now be operating. This can be verified manually by either touching or listening to the valve. By touching the Evaporative valve, it should be possible to feel the valve switching. Listening to the Evaporative valve is best done using a workshop stethoscope, through which it should be possible to hear the valve operating.

Diagnostic Trouble Code (DTC) index/Symptom Chart

1. **1.** Where the Jaguar approved diagnostic system is available, complete the S93 report before clearing any or all fault codes from the vehicle.

• NOTE: If a DTC cannot be cleared, then there is a permanent fault present that flags again as soon as it is cleared. (The exception to this is P1260, which will only clear following an ignition OFF/ON cycle after rectification.)

2. **2.** If the cause is not visually evident and the Jaguar approved diagnostic system is not available, use a fault code reader to retrieve the fault codes before proceeding to the Diagnostic Trouble Code (DTC) Index Chart, or the Symptom Chart if no DTCs are set.

3. **3.** Using the Jaguar approved diagnostic system where available, and a scan tool where not, check the freeze frame data for information on the conditions applicable when the fault was flagged. The format of this will vary, depending on the tool used, but can provide information useful to the technician in diagnosing the fault.

CAUTION: When probing connectors to take measurements in the course of the pinpoint tests, use the adaptor kit, part number 3548-1358-00.

• NOTE: When performing electrical voltage or resistance tests, always use a digital multimeter (DMM) accurate to 3 decimal places, and with an up-to-date calibration certificate. When testing resistance, always take the resistance of the DMM leads into account.

• NOTE: Check and rectify basic faults before beginning diagnostic routines involving pinpoint tests.

Symptom Chart

Symptom	Possible Source	Action
Difficulty in filling	● Restriction in the vapor line between the fuel tank and the carbon canister outlet/atmospheric port	Refer to Action for DTC P0446
Fuel smell	● Adaptions incomplete ● Purge valve inoperative	Carry out adaptions procedure, check purge valve operation
Message centre display (see below)	● Fuel filler cap missing/not tightened after refuelling	Check fuel filler cap, refer to Action for DTC P0455,

Driver Information

• NOTE: Use this table to identify DTCs associated with the message centre display, then refer to the DTC index for possible sources and actions.

• NOTE: For definitions of Default Modes, see the foot of this table.

• NOTE: A trip is an ignition OFF, 30 seconds delay, ignition ON cycle, plus a minimum coolant temperature increase of 22°C (40°F) after which the coolant temperature should reach a minmum 71°C (160°F)

Warning Light	Message	Default Mode	DTC
Check Engine (after two trips)	None	ECM default. (canister purge inhibited, adaptive fuel metering inhibited)	P0441, P0442, P0443, P0444, P0445, P0446, P0447, P0448, P0455, P0456
Check Engine (after two trips)	None	None	P0450, P0452, P0453
Red	Check fuel filler cap	ECM default. (canister purge inhibited, adaptive fuel metering inhibited)	P0455

Diagnostic Trouble Code (DTC) index

Diagnostic Trouble Code	Description	Possible Source	Action
P0441 (Euro only)	Incorrect purge flow	● Evaporative canister purge pipe restricted, leaking, disconnected ● Evaporative canister vent restricted ● Evaporative canister purge valve to engine pipe(s) restricted, leaking, disconnected ● Evaporative canister purge valve failure.	GO to Pinpoint Test A.
P0442	Leak detected. 40 thou.	● Fuel tank filler cap seal defective ● System leak (canister damage, pipework damage) ● Canister close valve leaking ● Fuel tank leak	Check filler cap, system pipework, fuel tankGO to Pinpoint Test B. For fuel tank information, REFER to Section 310-01 Fuel Tank and Lines. Where K-Line or Vacutec equipment is available, carry out the appropriate test. See bulletin 05.1-29, or Vacutec operating instructions

Diagnostic Trouble Code	Description	Possible Source	Action
P0443	Canister purge valve malfunction (leaking)	• Canister purge valve failure.	Carry out system pressure check (K-Line or Vacutec equipment. See bulletin 05.1-29, or Vacutec operating instructions)
P0444	Canister purge valve circuit open circuit	• Canister purge valve disconnected • Canister purge valve to ECM drive circuit; open circuit, high resistance • Canister purge valve failure.	Check purge valve connections, GO to Pinpoint Test B.
P0445	Canister purge valve circuit short circuit	• Canister purge valve to ECM drive circuit; short circuit to ground • Canister purge valve failure.	GO to Pinpoint Test B.
P0446	Canister close valve malfunction (CCV stuck closed)	• Restricted flow through; air vent, filter, CCV or canister • Canister close valve failure	Inspect the components listed, and interconnecting pipework for blockage, kinks or flattened areas
P0447	Canister close valve circuit open circuit.	• Canister close valve power supply circuit; open circuit, short circuit • Canister close valve to ECM drive circuit; open circuit, high resistance, short circuit to B+ voltage • Canister close valve failure	GO to Pinpoint Test C.
P0448	Canister close valve circuit short circuit	• Canister close valve to ECM drive circuit; short circuit to ground • Canister close valve failure	GO to Pinpoint Test C.
P0450	Fuel tank Pressure (FTP) sensor malfunction (output stuck/not changing)	• FTP sensor disconnected • FTP sensor failure	Check FTP sensor connections. GO to Pinpoint Test D.
P0452	Fuel tank Pressure (FTP) sensor circuit; low voltage (low pressure)	• FTP sensor disconnected • FTP sensor to ECM sense circuit; open circuit, short circuit to ground • FTP sensor to splice in sensor supply circuit; open circuit, high resistance • FTP sensor failure	For FTP sensor supply tests, REFER to Section 303-14 Electronic Engine Controls. GO to Pinpoint Test D.
P0453	Fuel tank Pressure (FTP) sensor circuit; high voltage (high pressure)	• FTP sensor to splice in sensor ground circuit; open circuit, high resistance • FTP sensor to ECM sense circuit; open circuit, short circuit to high voltage • FTP sensor failure	Check fuel filler cap and seal, pipework, etc, GO to Pinpoint Test B. For fuel tank information, REFER to Section 310-01 Fuel Tank and Lines.
P0455	Leak detected-large	• Fuel filler cap missing • Fuel filler cap seal defective • System leak (canister damage, pipework damage) • CCV stuck open • Canister purge valve to engine purge pipe; restricted, leaking, disconnected • Canister purge valve stuck closed • Fuel tank leak	Check fuel filler cap and seal, pipework, etc, GO to Pinpoint Test B. For fuel tank information, REFER to Section 310-01 Fuel Tank and Lines.
P0456	Leak detected - 20 thou.	• Fuel filler cap seal defective • System leak (canister damage, pipework damage) • CCV leaking • Fuel tank leak	Check fuel filler cap and seal, pipework, etc, GO to Pinpoint Test B. For fuel tank information, REFER to Section 310-01 Fuel Tank and Lines.

Pinpoint Tests

PINPOINT TEST A : DTC P0441; EVAPORATIVE SYSTEM INCORRECT PURGE FLOW	
• NOTE: European specification vehicles only.	
TEST CONDITIONS	**DETAILS/RESULTS/ACTIONS**
A1: CHECK FUEL FILLER CAP FITMENT AND CONDITION OF CANISTER, PIPES AND CONNECTORS	
	1 Make sure that the fuel filler cap is correctly installed and tightened.
	2 Check the condition of the carbon canister.
	3 Check the condition of all accessible pipes and connectors in the vapor line.
	Are the canister and all pipes and connectors in good condition? **Yes** GO to A2. **No** REPAIR as necessary. CLEAR the DTC. Carry out a full Evaporative system monitor drive cycle. Recheck DTCs. For additional information, see "diagnostic drive cycles" above.
A2: CHECK EVAPORATIVE PURGE VALVE IS OPERATING	
	1 Disconnect the Vapor pipe from the inlet port of the Evaporative purge valve (ie, from fuel tank).
	2 RUN the engine for 2 minutes, making sure that the engine reaches normal operating temperature.
	3 Check that the Evaporative purge valve is operating, by touch or by sound. (Using a stethoscope, it will be possible to hear the valve operating).
	Is the valve operating? **Yes** Recheck DTCs. Carry out a flow check monitor drive cycle. For additional information, see "diagnostic drive cycles" above.

	No CHECK for DTC P0444, P0445. Conduct "green" ECM drive cycle. For additional information, see "diagnostic drive cycles" above.

PINPOINT TEST B : DTC P0442, P0444, P0445, P0455, P0456; LEAK DETECTED:LARGE/20 THOU/40 THOU, PURGE VALVE CIRCUIT MALFUNCTION, OPEN/SHORT CIRCUIT,

• NOTE: Where K-Line or Vacutec equipment is available, the apppropriate test should be carried out, see bulletin 05.1-29, and Vacutec operating instructions.

TEST CONDITIONS	DETAILS/RESULTS/ACTIONS
B1: CHECK FUEL FILLER CAP FITMENT AND CONDITION OF CANISTER, PIPES AND CONNECTORS	
	1 Make sure that the fuel filler cap is correctly installed and tightened.
	2 Check the condition of the carbon canister.
	3 Check the condition of all accessible pipes and connectors in the vapor line.
	Are the canister and all pipes and connectors in good condition? **Yes** GO to B2. **No** REPAIR as necessary. CLEAR the DTC. Carry out a full Evaporative system monitor drive cycle. Recheck DTCs. For additional information, see "diagnostic drive cycles" above.
B2: CHECK THE CANISTER PURGE VALVE DRIVE CIRCUIT FOR HIGH RESISTANCE	
	1 Disconnect the battery negative terminal.
	2 Disconnect the canister purge valve electrical connector, LF99.
	3 Disconnect the ECM electrical connector, EM80.
	4 Measure the resistance between LF99, pin 02 (UY) and EM80, pin 66 (UY).
	Is the resistance greater than 5 ohms? **Yes** REPAIR the high resistance circuit. For additional information, refer to the wiring diagrams. CLEAR the DTC. Carry out a full Evaporative system monitor drive cycle. **No** GO to B3.
B3: CHECK THE CANISTER PURGE VALVE DRIVE CIRCUIT FOR SHORT TO HIGH VOLTAGE	
	1 Reconnect the battery negative terminal.
	2 Turn the ignition switch to the ON position.
	3 Measure the voltage between LF99, pin 02 (UY) and GROUND.
	Is the voltage greater than 3 volts? **Yes** REPAIR the short circuit. For additional information, refer to the wiring diagrams. CLEAR the DTC. Carry out a full Evaporative system monitor drive cycle. **No** GO to B4.
B4: CHECK THE CANISTER PURGE VALVE DRIVE CIRCUIT FOR SHORT TO GROUND	
	1 Turn the ignition switch to the OFF position.
	2 Measure the resistance between LF99, pin 02 (UY) and GROUND.
	Is the resistance less than 10,000 ohms? **Yes** REPAIR the short circuit. For additional information, refer to the wiring diagrams. CLEAR the DTC. Carry out a full Evaporative system monitor drive cycle. **No** GO to B5.
B5: CHECK THE CANISTER PURGE VALVE POWER SUPPLY	
	1 Turn the ignition switch to the ON position. • Make sure the EMS relay is energised.
	2 Measure the voltage between LF99, pin 01 (WU) and GROUND.
	Is the voltage less than 10 volts? **Yes** REPAIR the circuit between the canister purge valve and battery. This circuit includes the EMS fuse box, fuse 14, the EMS relay, and the high power protection module. For additional information, refer to the wiring diagrams. CLEAR the DTC. Carry out a full Evaporative system monitor drive cycle. **No** INSTALL a new canister purge valve. REFER to Evaporative Emission Canister Purge Valve - in this section. Carry out a full Evap system monitor drive cycle. Recheck DTCs. For additional information, see "diagnostic drive cycles" above.

PINPOINT TEST C : DTC P0447, P0448; CANISTER CLOSE VALVE (CCV) CIRCUIT MALFUNCTION, OPEN /SHORT CIRCUIT

TEST CONDITIONS	DETAILS/RESULTS/ACTIONS
C1: CHECK THE CANISTER CLOSE VALVE POWER SUPPLY	
	1 Disconnect the CCV electrical connector, BT14.
	2 Turn the ignition switch to the ON position. • Make sure the EMS relay is energised.
	3 Measure the voltage between BT14, pin 02 (WU) and GROUND.
	Is the voltage greater than 10 volts? **Yes** GO to C2. **No** REPAIR the circuit between the CCV and battery. This circuit includes the EMS fuse box, fuse 14, the EMS relay and the high power protection module. For additional information, refer to the wiring diagrams. CLEAR the DTC. Carry out a full Evaporative system monitor drive cycle.
C2: CHECK THE CANISTER CLOSE VALVE POWER SUPPLY CIRCUIT FOR SHORT CIRCUIT	
	1 Turn the ignition switch to the OFF position.

	2 Measure the voltage between BT14, pin 02 (WU) and GROUND.
	Is the voltage greater than 3 volts? **Yes** REPAIR the short circuit. For additional information, refer to the wiring diagrams. CLEAR the DTC. Carry out a full Evaporative system monitor drive cycle. **No** GO to C3.
C3: CHECK THE CANISTER CLOSE VALVE DRIVE CIRCUIT FOR HIGH RESISTANCE	
	1 Disconnect the battery negative terminal.
	2 Disconnect the ECM electrical connector, EM80.
	3 Measure the resistance between BT14, pin 01 (O) and EM80, pin 67 (O).
	Is the resistance greater than 5 ohms? **Yes** REPAIR the high resistance circuit. For additional information, refer to the wiring diagrams. CLEAR the DTC. Carry out a full Evaporative system monitor drive cycle. **No** GO to C4.
C4: CHECK THE CANISTER CLOSE VALVE DRIVE CIRCUIT FOR SHORT TO HIGH VOLTAGE	
	1 Reconnect the battery negative terminal.
	2 Measure the voltage between BT14, pin 01 (O) and GROUND.
	Is the voltage greater than 3 volts? **Yes** REPAIR the short circuit. For additional information, refer to the wiring diagrams. CLEAR the DTC. Carry out a full Evaporative system monitor drive cycle. **No** GO to C5.
C5: CHECK THE CANISTER CLOSE VALVE DRIVE CIRCUIT FOR SHORT TO GROUND	
	1 Measure the resistance between BT14, pin 01 (O) and GROUND.
	Is the resistance less than 10,000 ohms? **Yes** REPAIR the short circuit. For additional information, refer to the wiring diagrams. CLEAR the DTC. Carry out a full Evaporative system monitor drive cycle. **No** INSTALL a new CCV. REFER to Fuel Vapor Vent Valve - in this section. CLEAR the DTC. Carry out a full Evaporative system monitor drive cycle.

PINPOINT TEST D : DTC P0450, P0452, P0453; FUEL TANK PRESSURE (FTP) SENSOR CIRCUIT MALFUNCTION, LOW/HIGH VOLTAGE

• NOTE: For FTP sensor supply and ground circuit tests, REFER to Section 303-14 Electronic Engine Controls.

TEST CONDITIONS	DETAILS/RESULTS/ACTIONS
D1: CHECK THE FTP SENSOR SENSE CIRCUIT FOR HIGH RESISTANCE	
	1 Disconnect the battery negative terminal.
	2 Disconnect the FTP sensor electrical connector, FT02.
	3 Disconnect the ECM electrical connector, EM80.
	4 Measure the resistance between FT02, pin 02 (RG) and EM80, pin 104 (RG).
	Is the resistance greater than 5 ohms? **Yes** REPAIR the high resistance circuit. For additional information, refer to the wiring diagrams. CLEAR the DTC. Carry out a full Evaporative system monitor drive cycle. **No** GO to D2.
D2: CHECK THE FTP SENSOR SENSE CIRCUIT FOR SHORT TO HIGH VOLTAGE	
	1 Reconnect the battery negative terminal.
	2 Turn the ignition switch to the ON position.
	3 Measure the voltage between FT02, pin 02 (RG) and GROUND.
	Is the voltage greater than 3 volts? **Yes** REPAIR the short circuit. For additional information, refer to the wiring diagrams. CLEAR the DTC. Carry out a full Evaporative system monitor drive cycle. **No** GO to D3.
D3: CHECK THE FTP SENSOR SENSE CIRCUIT FOR SHORT TO GROUND	
	1 Measure the resistance between FT02, pin 02 (RG) and GROUND.
	Is the resistance less than 10,000 ohms? **Yes** REPAIR the short circuit. For additional information, refer to the wiring diagrams. CLEAR the DTC. Carry out a full Evaporative system monitor drive cycle. **No** INSTALL a new FTP sensor. REFER to Section 310-01 Fuel Tank and Lines. CLEAR the DTC. Carry out a full Evaporative system monitor drive cycle.

Evaporative Emissions - Evaporative Emission CanisterVehicles Without: On-Board Refueling Vapor Recovery (ORVR)

Removal and Installation

Removal

WARNING: Do not smoke or carry lighted tobacco or open flame of any type when working on or near any fuel related components. Highly flammable vapors are always present and may ignite. Failure to follow these instructions may result in personal injury.

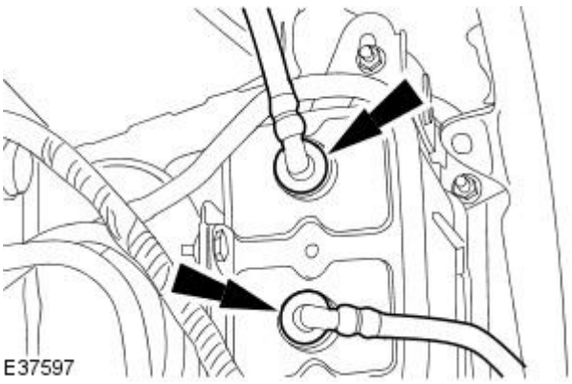

1. Remove the left-hand fender splash shield.
   For additional information, refer to Section 501-02 Front End Body Panels.
2. Disconnect the evaporative emission canister tubes.
   - Remove and discard the evaporative emission canister tube O-ring seals.
   - Cap the evaporative emission canister and tubes to prevent contamination.

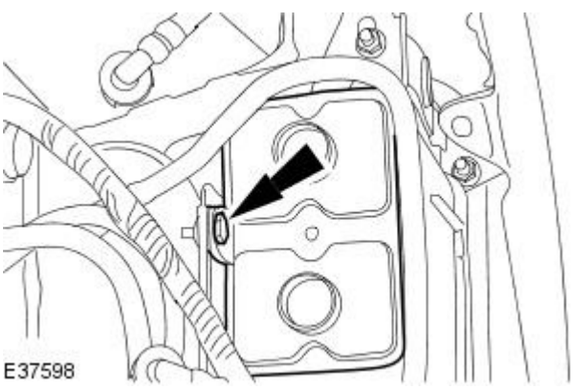

3. Remove the evaporative emission canister.

Installation

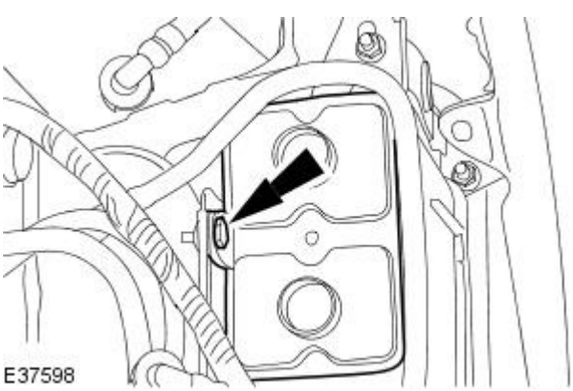

1. NOTE: Install new evaporative emission canister tube O-ring seals.

   To install, reverse the removal procedure.

   - Tighten to 6 Nm.

Evaporative Emissions - Evaporative Emission CanisterVehicles With: On-Board Refueling Vapor Recovery (ORVR)

Removal and Installation

Removal

• WARNINGS:

Do not smoke or carry lighted tobacco or open flame of any type when working on or near any fuel related components. Highly flammable vapors are always present and may ignite. Failure to follow these instructions may result in personal injury.

Do not carry or operate cellular phones when working on or near any fuel related components. Highly flammable vapours are always present and may ignite. Failure to follow these instructions may result in personal injury.

1. Raise and support the vehicle.
For additional information, refer to Section 100-02 Jacking and Lifting.

2. Disconnect the evaporative emission canister tube.

- Remove and discard the evaporative emission canister tube O-ring seal.
- Cap the evaporative emission canister and tube to prevent contamination.

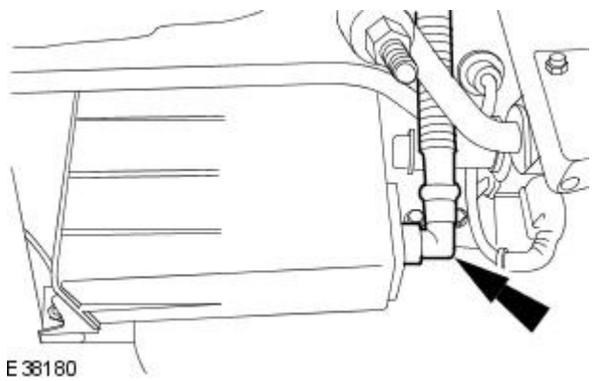
E38180

3. Detach the evaporative emission canister.

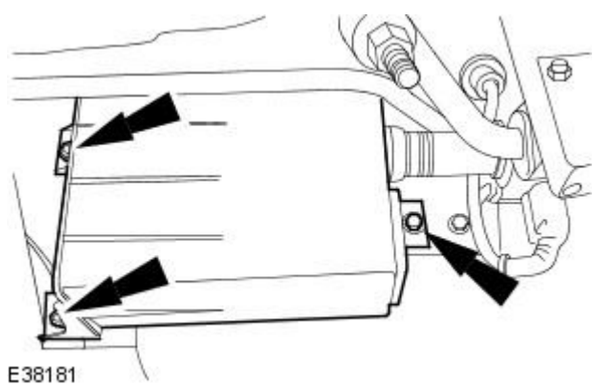
E38181

4. Remove the evaporative emission canister.

- Disconnect the evaporative emission canister hose.
- Cap the evaporative emission canister and tube to prevent contamination.

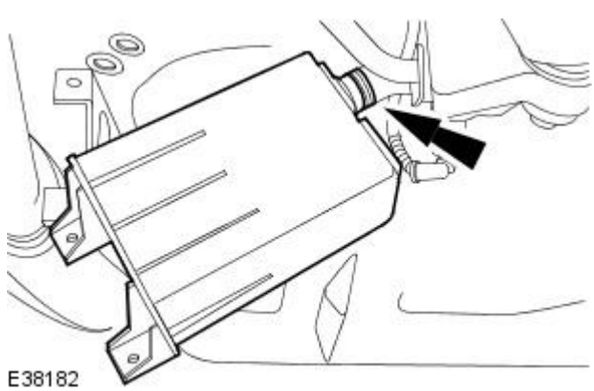
E38182

Installation

1. NOTE: Install a new evaporative emission canister tube O-ring seal.

To install, reverse the removal procedure.

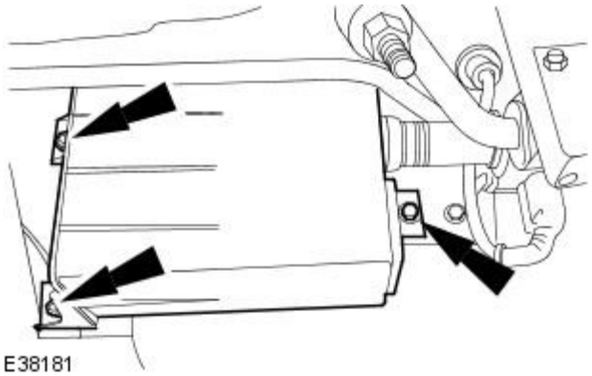

2. Tighten to 6 Nm.

Evaporative Emissions - Evaporative Emission Canister Purge Valve

Removal and Installation

Removal

All vehicles

• WARNINGS:

Do not smoke or carry lighted tobacco or open flame of any type when working on or near any fuel related components. Highly flammable vapors are always present and may ignite. Failure to follow these instructions may result in personal injury.

Do not carry or operate cellular phones when working on or near any fuel related components. Highly flammable vapours are always present and may ignite. Failure to follow these instructions may result in personal injury.

1. Remove the left-hand fender splash shield.
   For additional information, refer to: Fender Splash Shield (501-02 Front End Body Panels, Removal and Installation).
2. Disconnect the evaporative emission canister purge valve electrical connector.

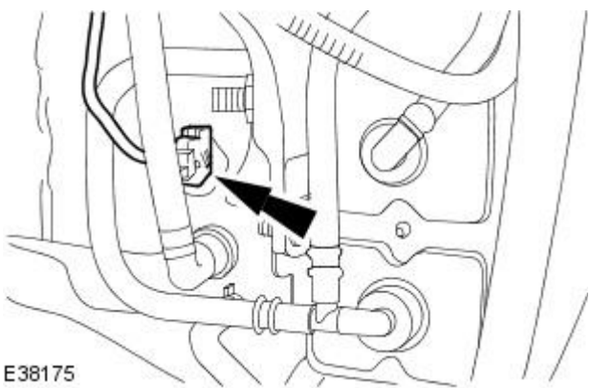

3. Disconnect the evaporative emission canister purge valve hose and tube.

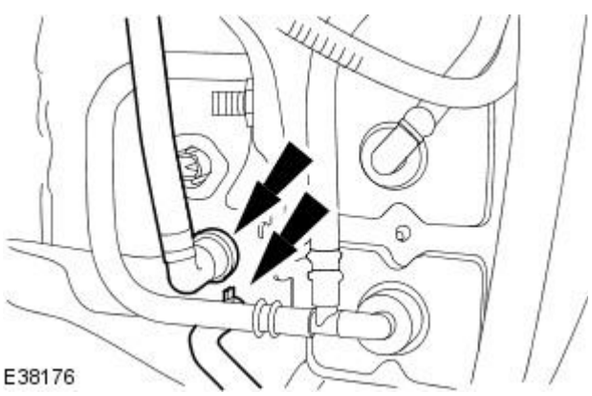

4. Remove the evaporative emission canister purge valve.

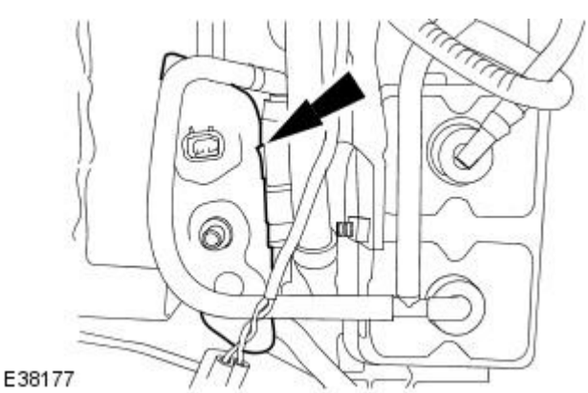

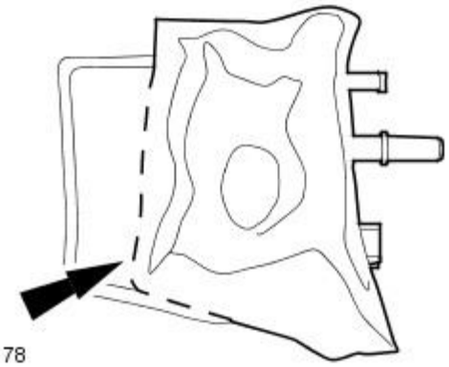

E38178

5. Using a suitable tool, cut the evaporative emission canister purge valve insulation where shown.

Vehicles built up to VIN:A40920

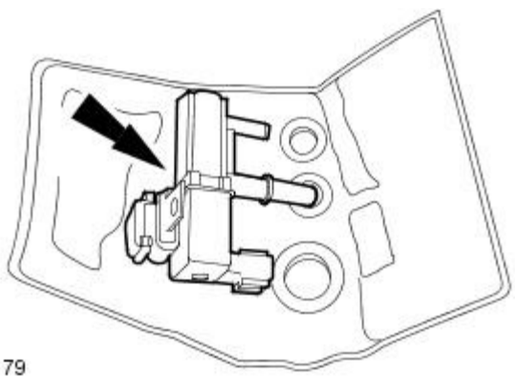

E38179

6. Remove evaporative emission canister purge valve.
   - Discard the evaporative emission canister purge valve insulation.

Vehicles built from VIN:A40921

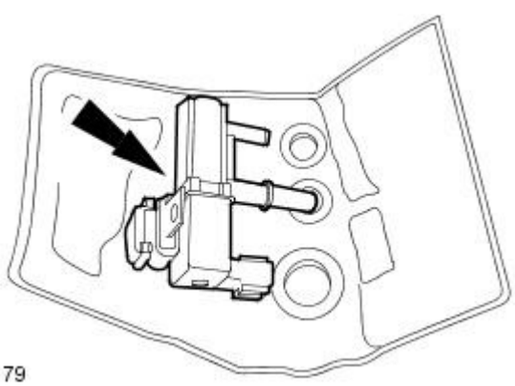

E38179

7. Remove evaporative emission canister purge valve.

Installation

Vehicles built up to VIN A37134

1. NOTE: Install a new evaporative emission canister purge valve insulation.

   To install, reverse the removal procedure.

2. If a new evaporative emission canister purge valve is to be installed, update the Engine Control Module (ECM) software. Refer to the Jaguar approved diagnostic system.

Vehicles built from VIN:A37135 to A40920

3. NOTE: Install a new evaporative emission canister purge valve insulation.

   To install, reverse the removal procedure.

Vehicles built from VIN A40921 onwards

4. NOTE: Install the existing evaporative canister purge valve insulation using suitable tape.

   To install, reverse the removal procedure.

Evaporative Emissions - Evaporative Emission Canister Vent SolenoidVehicles With: On-Board Refueling Vapor Recovery (ORVR)

Removal and Installation

Removal

• WARNINGS:

Do not smoke or carry lighted tobacco or open flame of any type when working on or near any fuel related components. Highly flammable vapors are always present and may ignite. Failure to follow these instructions may result in personal injury.

Do not carry or operate cellular phones when working on or near any fuel related components. Highly flammable vapours are always present and may ignite. Failure to follow these instructions may result in personal injury.

1. Raise and support the vehicle.
   For additional information, refer to Section 100-02 Jacking and Lifting.
2. Disconnect the evaporative emission canister vent solenoid vapor hose.

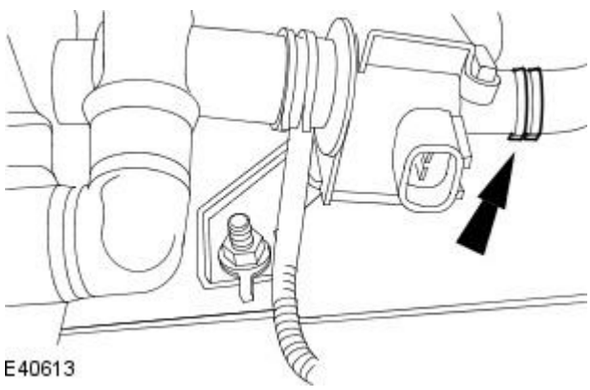

E40613

3. Disconnect the evaporative emission canister vent solenoid electrical connector

E38183

4. Remove the evaporative emission canister vent solenoid retaining nut.

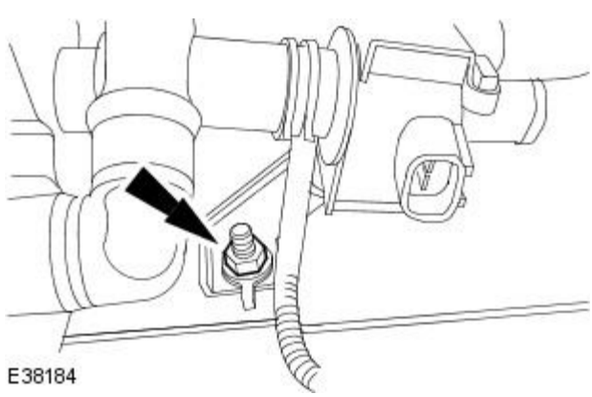

E38184

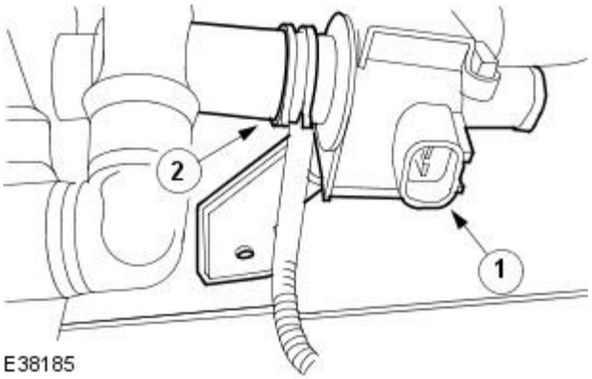

5. Remove the evaporative emission canister vent solenoid.

1. Reposition the evaporative emission vent solenoid
2. Remove the evaporative emission canister vent solenoid.

Installation

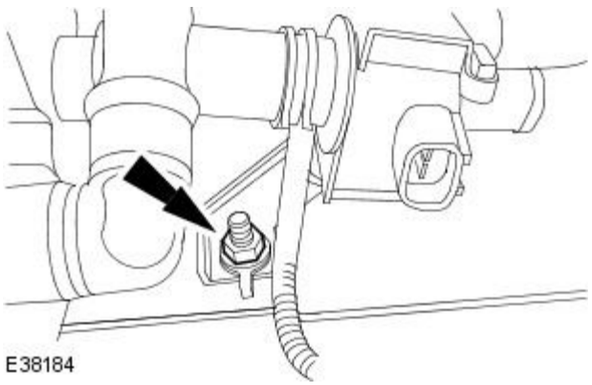

1. To install, reverse the removal procedure.

- Tighten to 6 Nm.

Published: 11-May-2011

Evaporative Emissions - Fuel Tank Pressure SensorVehicles With: On-Board Refueling Vapor Recovery (ORVR)

Removal and Installation

Removal

• WARNINGS:

Place the vehicle in a quarantined area and arrange "No Smoking/Petrol Fumes" signs about the vehicle.

Before any work is carried out on the fuel system, ground the vehicle to earth and maintain the ground connection until the work is complete.

Do not smoke or carry lighted tobacco or open flame of any type when working on or near any fuel related components. Highly flammable vapors are always present and may ignite. Failure to follow these instructions may result in personal injury.

The fuel system remains pressurized for a long time after the ignition is switched off. The fuel pressure must be relieved before attempting any repairs. Failure to follow these instructions may result in personal injury.

After carrying out repairs, the fuel system must be checked visually for leaks. Failure to follow these instructions may result in personal injury.

This procedure involves fuel handling. Be prepared for fuel spillage at all times and always observe fuel handling precautions. Failure to follow these instructions may result in personal injury.

If taken internally do not induce vomiting, seek immediate medical attention. Failure to follow these instructions may result in personal injury.

If fuel contacts the eyes, flush the eyes with cold water or eyewash solution and seek medical attention.

Wash hands thoroughly after handling, as prolonged contact may cause irritation. Should irritation develop, seek medical attention.

Do not carry or operate cellular phones when working on or near any fuel related components. Highly flammable vapours are always present and may ignite. Failure to follow these instructions may result in personal injury.

1. Remove the fuel tank.
   For additional information, refer to Section 310-01 Fuel Tank and Lines.
2. Disconnect the fuel tank pressure sensor electrical connector.

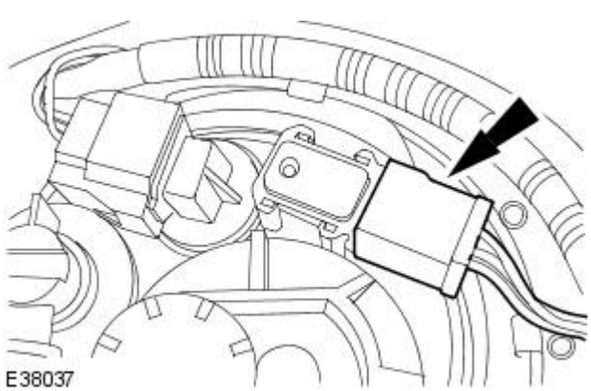

3. Remove the fuel tank pressure sensor.
   - Remove and discard the fuel tank pressure sensor gasket.

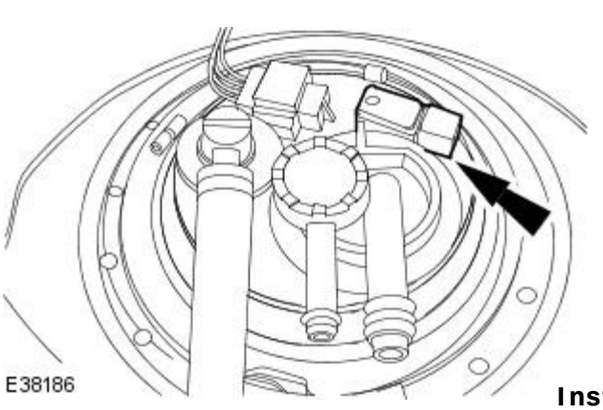

Installation

1. NOTE: Install a new fuel tank pressure sensor gasket.

To install, reverse the removal procedure.

Evaporative Emissions - Fuel Vapor Vent Valve HousingVehicles Without: On-Board Refueling Vapor Recovery (ORVR)

Removal and Installation

Special Tool(s)	
E36414	Fuel Tank Sender Unit Wrench 310-001
E36394	Quick Fit Connector Release Tool 310-054
E36415	Evaporative Loss Flange Lock Ring Wrench 412-070

Removal

1. WARNING: BEFORE PROCEEDING, IT IS ESSENTIAL THAT THE WARNING NOTES GIVEN IN SECTION 100-00 (UNDER THE HEADING "SAFETY PRECAUTIONS") ARE READ AND UNDERSTOOD.

Remove the fuel tank. Refer to operation 19.55.15.

- Do not install the fuel level sender unit, at this stage.

2. Tape back the insulation pads on top of the tank, to gain access to the evaporative loss flange.

3. Release the hose clip and disconnect the breather hose from the evaporative loss flange. Slide the hose along the pipe.

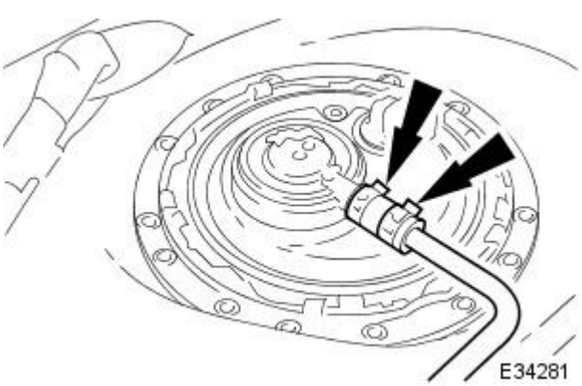

4. Remove the evaporative loss flange from the tank.

- Remove the locking ring (Tool 412-070) from the evaporative loss flange.
- Reposition the flange from the tank.

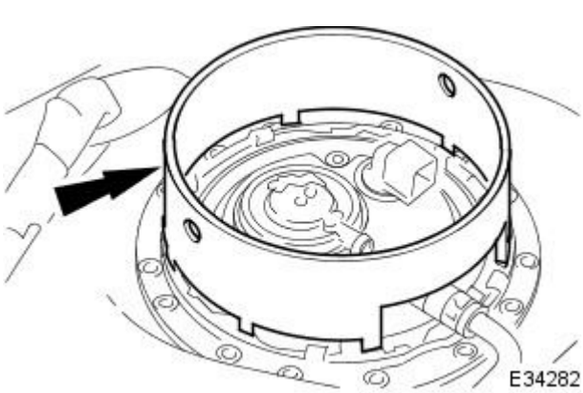

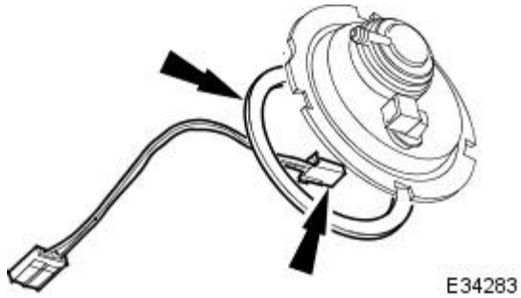

5. Remove the evaporative loss flange from the tank.

- Disconnect the fuel pump electrical link lead.
- Remove the flange and the flange to tank seal. Discard the seal.

Installation

1. Installation is the reverse of the removal procedure.

- Install a new sealing ring to the evaporative loss flange; refer to 19.55.25.
- Install the fuel level sender unit.

Published: 11-May-2011

Evaporative Emissions - Fuel Vapor Vent Valve HousingVehicles With: On-Board Refueling Vapor Recovery (ORVR)

Removal and Installation

Special Tool(s)	
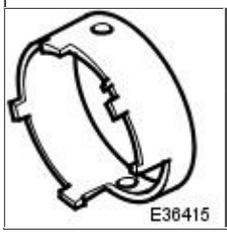	Remover/Installer, Fuel Vapor Vent Valve Housing Locking Ring 412-070

Removal

• WARNINGS:

Place the vehicle in a quarantined area and arrange "No Smoking/Petrol Fumes" signs about the vehicle.

Before any work is carried out on the fuel system, ground the vehicle to earth and maintain the ground connection until the work is complete.

Do not smoke or carry lighted tobacco or open flame of any type when working on or near any fuel related components. Highly flammable vapors are always present and may ignite. Failure to follow these instructions may result in personal injury.

The fuel system remains pressurized for a long time after the ignition is switched off. The fuel pressure must be relieved before attempting any repairs. Failure to follow these instructions may result in personal injury.

After carrying out repairs, the fuel system must be checked visually for leaks. Failure to follow these instructions may result in personal injury.

This procedure involves fuel handling. Be prepared for fuel spillage at all times and always observe fuel handling precautions. Failure to follow these instructions may result in personal injury.

If taken internally do not induce vomiting, seek immediate medical attention. Failure to follow these instructions may result in personal injury.

If fuel contacts the eyes, flush the eyes with cold water or eyewash solution and seek medical attention.

Wash hands thoroughly after handling, as prolonged contact may cause irritation. Should irritation develop, seek medical attention.

Do not carry or operate cellular phones when working on or near any fuel related components. Highly flammable vapours are always present and may ignite. Failure to follow these instructions may result in personal injury.

1. Remove the fuel tank.
   For additional information, refer to Section 310-01 Fuel Tank and Lines.
2. Disconnect the fuel tank pressure sensor electrical connector.

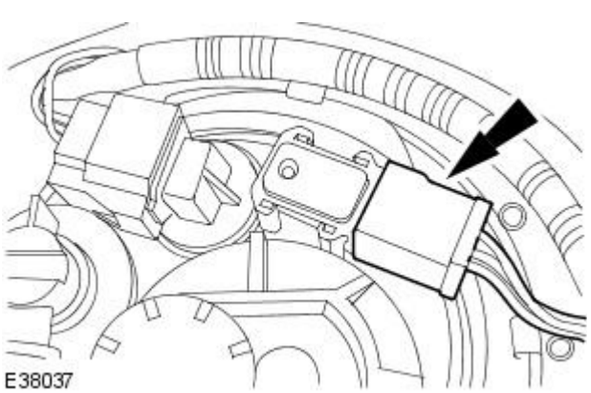

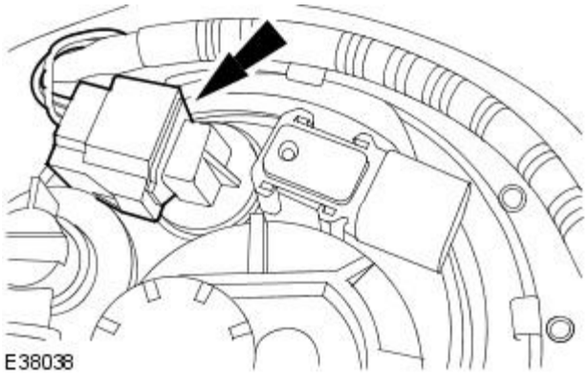

3. Disconnect the fuel pump module wiring harness electrical connector.

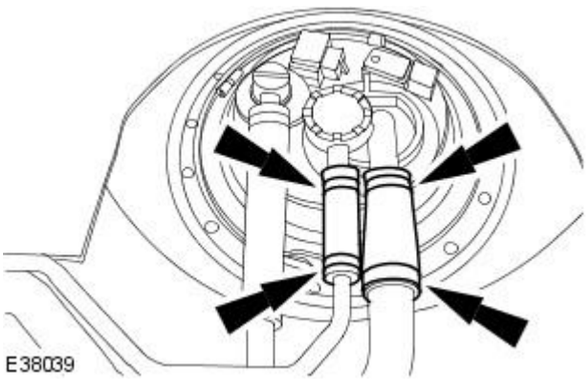

4. Remove the fuel level vent valve hoses.

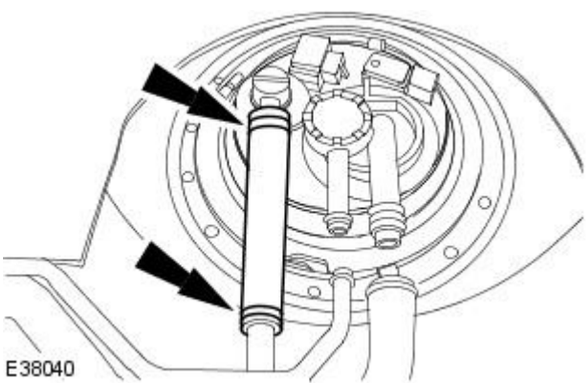

5. Detach the grade vent valve hose.

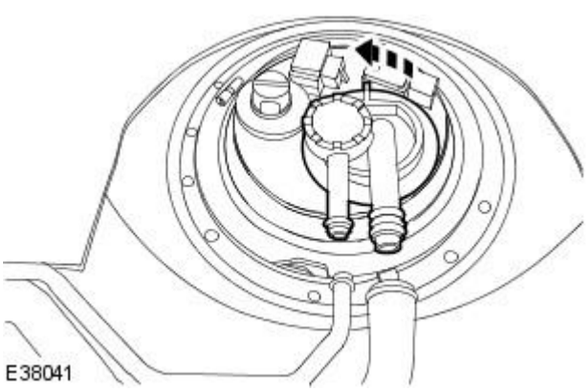

6. Remove the fuel vapor vent valve.

- Rotate the fuel vapor vent valve anti-clockwise.

7. Remove and discard the fuel vapor vent valve O-ring seal.

8. Using the special tool remove the fuel vapor vent housing locking ring.

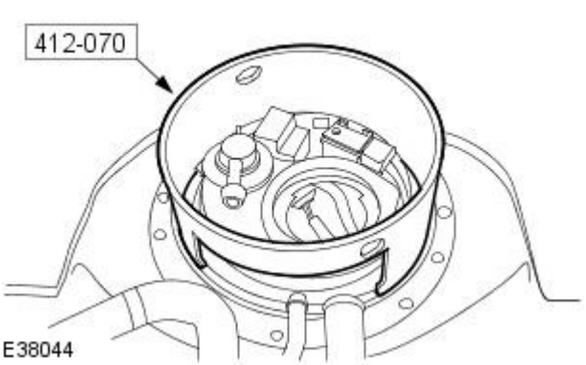

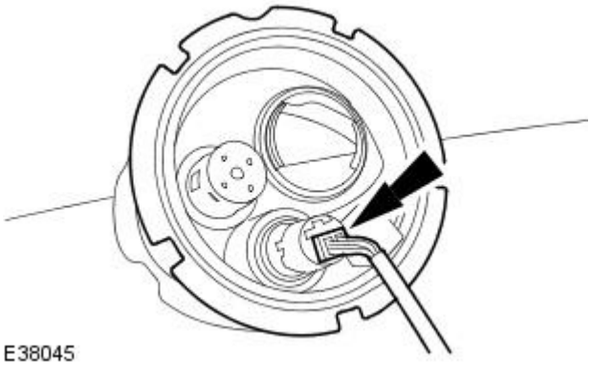

9. Remove the fuel vapor vent housing.

- Disconnect the fuel pump module link lead electrical connector.

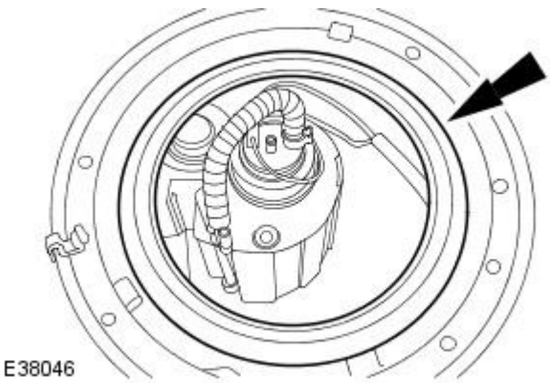

10. Remove and discard the fuel vapor vent valve housing gasket.

Installation

1. NOTE: Install a new fuel vapor vent valve housing gasket.

• NOTE: Install a new fuel vapor vent valve O-ring seal.

To install, reverse the removal procedure.

Electronic Engine Controls -

Torque Specifications

Item	Nm	lb-ft	lb-in
Accelerator pedal position sensor retaining bolts	7	-	62
Accelerator pedal position sensor bracket	9	-	80
Engine coolant temperature (ECT) sensor	17	13	-
Camshaft position (CMP) sensor retaining bolt	7	-	62
Catalyst monitor sensor	45	33	-
Heated oxygen sensor (HO2S)	45	33	-
Fuel temperature sensor	6	-	53
Intake air temperature (IAT) sensor	35	26	-
Knock sensor (KS) retaining nut	20	15	-
Manifold absolute pressure (MAP) sensor retaining screws	10	7	-
Oil temperature sensor	15	11	-
Engine control module (ECM) electrical connector retaining bolt	5	-	44
Variable camshaft timing oil control solenoid retaining bolt	11	-	8
Crankshaft position (CKP) sensor retaining bolt	7	-	62
Mass air flow (MAF) sensor retaining screws	2	-	18

Lubricants, fluids, sealers and adhesives

Description	Specification
Sealant	WSK-M4G-328-A3

Electronic Engine Controls - Electronic Engine Controls

Description and Operation

Vehicles with supercharger

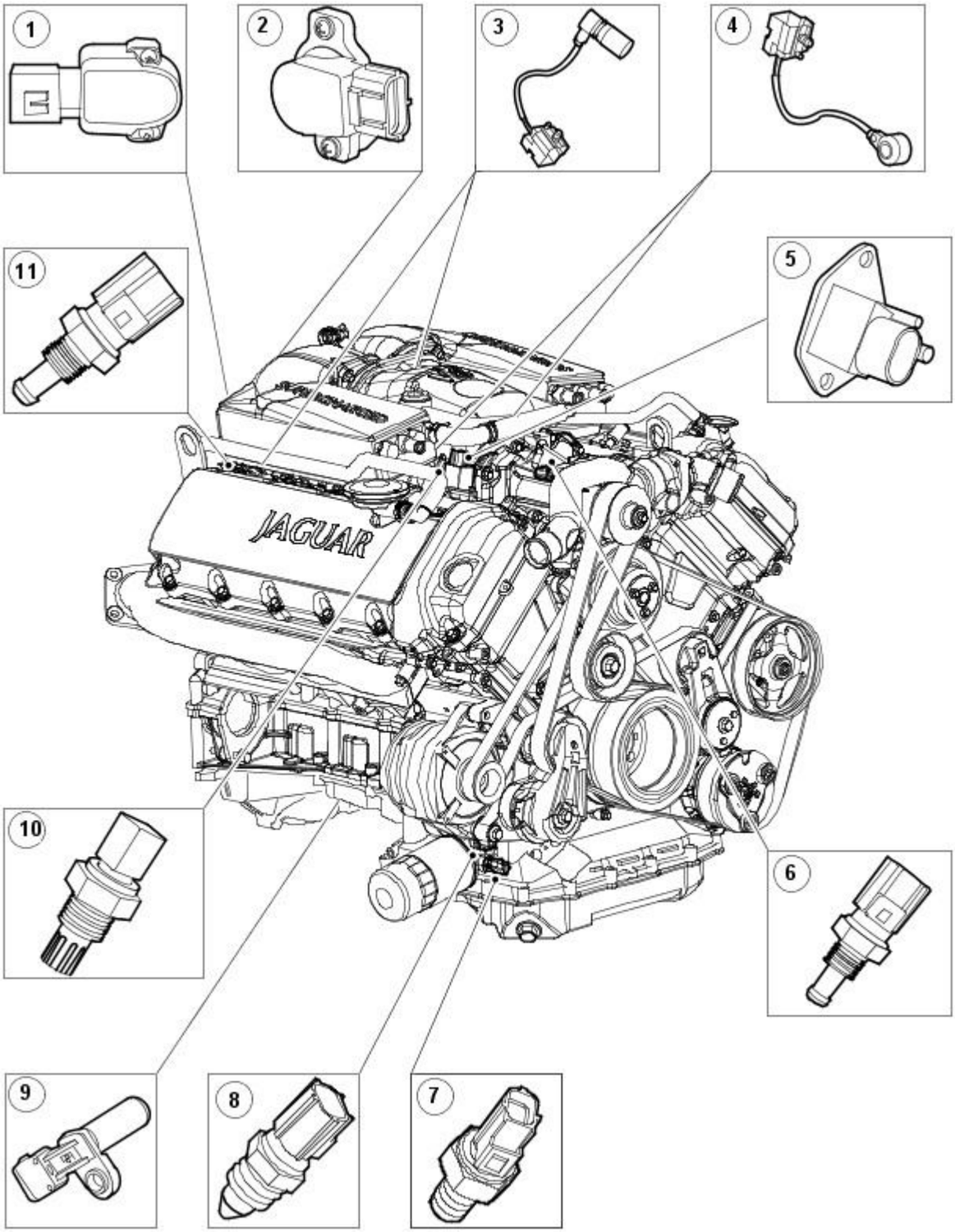

E37974

Item	Part Number	Description
1	—	Throttle position (TP) sensor
2	—	Manifold absolute pressure (MAP) sensor
3	—	Camshaft position (CMP) sensor
4	—	Knock sensor (KS)
5	-	Fuel rail pressure (FRP) sensor
6	—	Engine coolant temperature (ECT) sensor
7	—	Oil pressure sensor
8	—	Oil temperature sensor
9	—	Crankshaft position (CKP) sensor
10	—	Intake air temperature (IAT) sensor
11	—	Fuel temperature sensor

Vehicles without supercharger

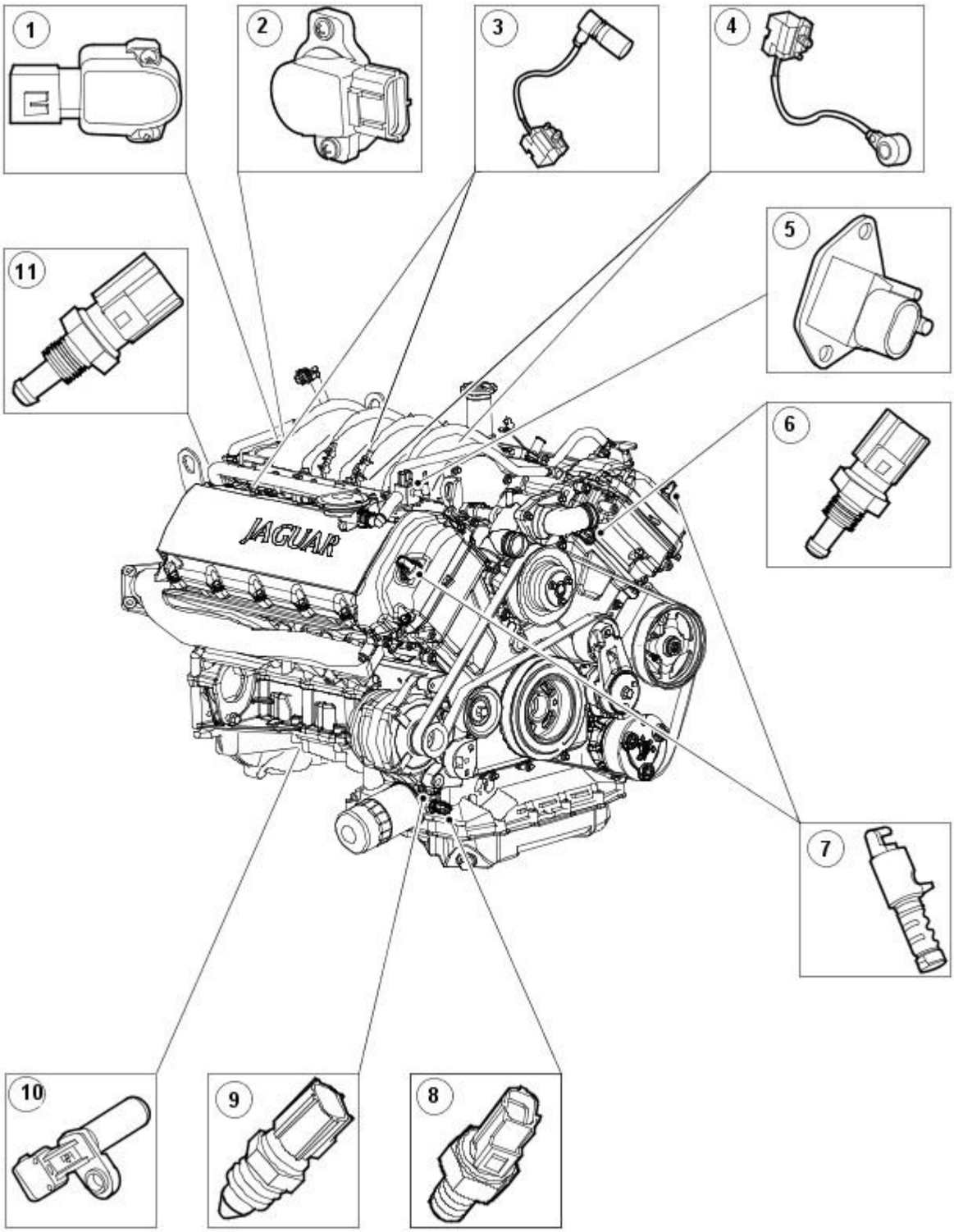

E37973

Item	Part Number	Description
1	-	Throttle position (TP) sensor
2	-	Manifold absolute pressure (MAP) sensor
3	-	Camshaft position (CMP) sensor
4	-	Knock sensor (KS)
5	-	Fuel rail pressure (FRP) sensor
6	-	Engine coolant temperature (ECT) sensor
7	-	Variable camshaft timing oil control solenoid
8	-	Oil pressure sensor
9	-	Oil temperature sensor
10	-	Crankshaft position (CKP) sensor
11	-	Fuel temperature sensor

All vehicles

Heated Oxygen Sensor (HO2S) and Catalyst Monitor Sensor

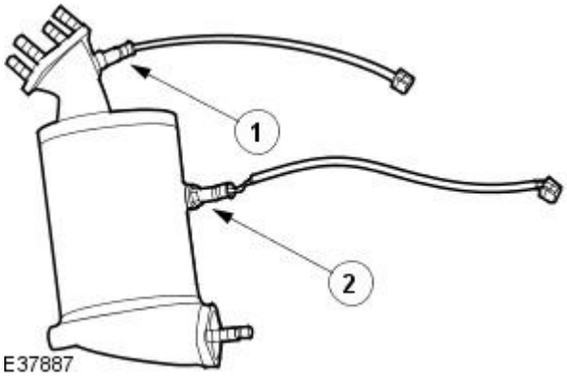

Item	Part Number	Description
1	-	Heated oxygen sensor (HO2S)
2	-	Catalyst monitor sensor

Mass Air Flow (MAF) Sensor

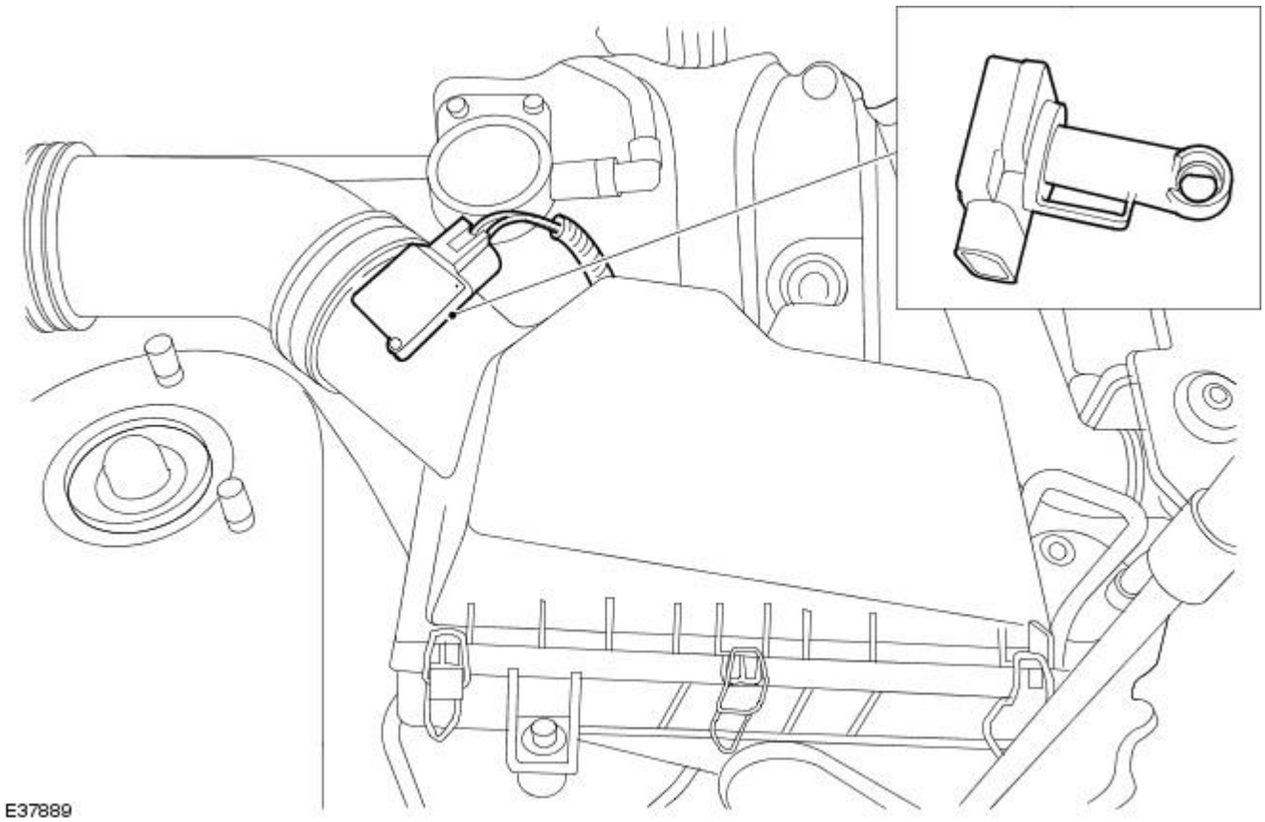

Engine Control Module (ECM) and Accelerator Pedal Position (APP) Sensor - Left-hand drive vehicles

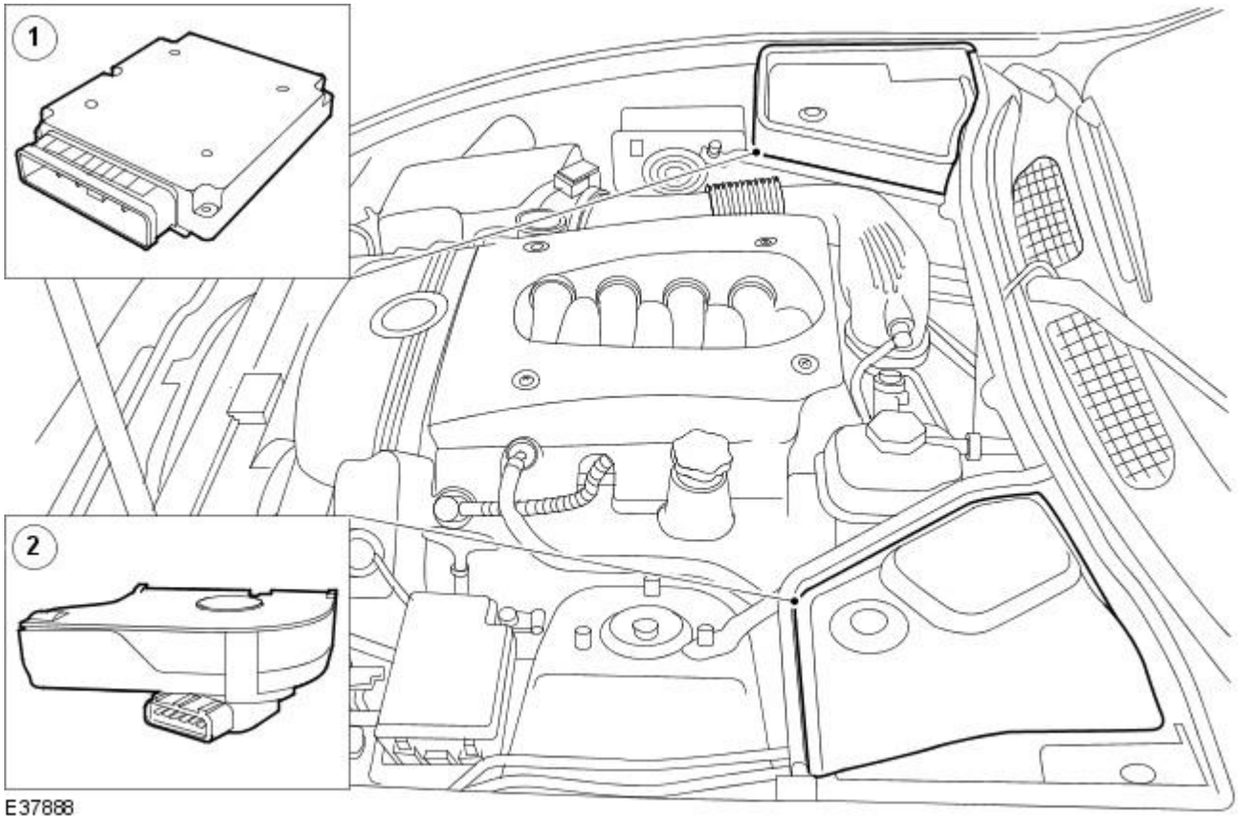

Item	Part Number	Description
1	-	Engine control module (ECM)
2	-	Accelerator pedal position (APP) sensor

Engine Control Module (ECM) and Accelerator Pedal Position (APP) Sensor - Right-hand drive vehicles

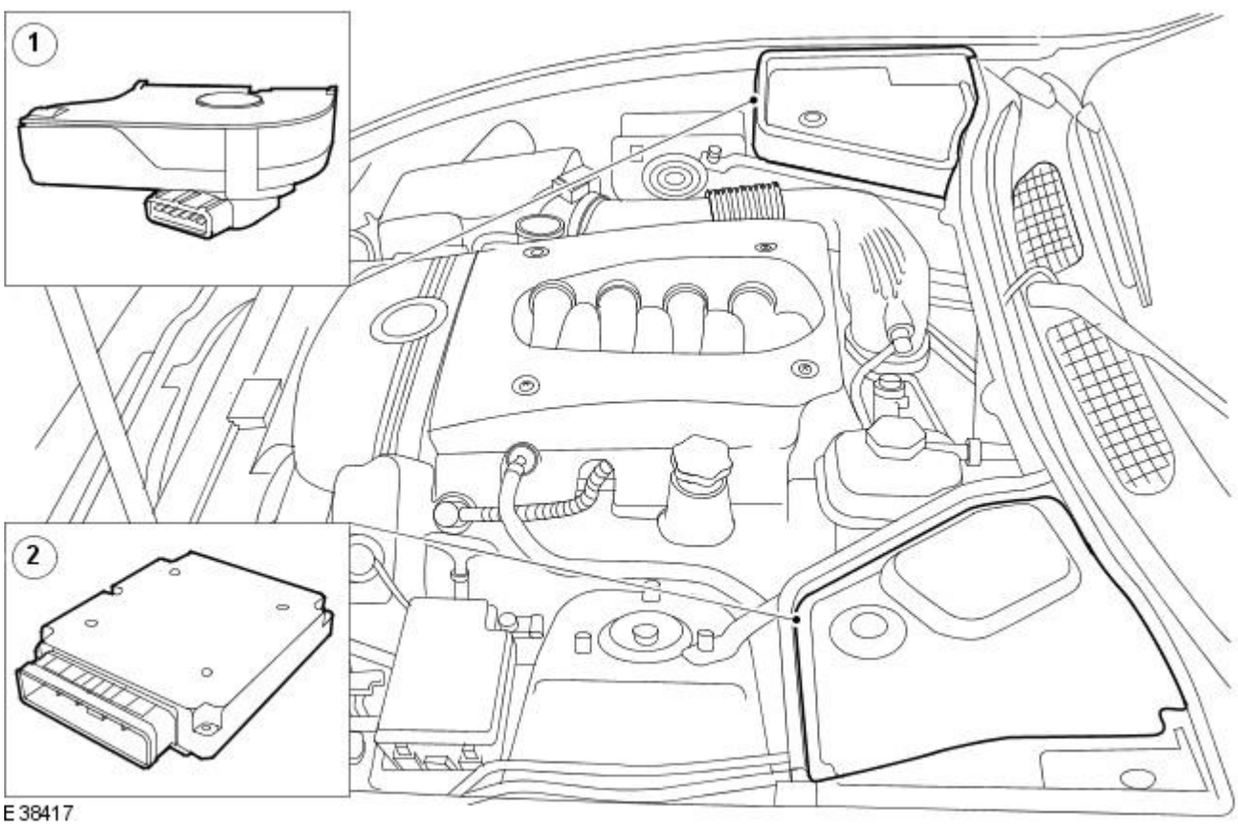

Item	Part Number	Description
1	-	Accelerator pedal position (APP) sensor
2	-	Engine control module (ECM)

Engine Control Module (ECM)

The electronic engine control system consists of a engine control module (ECM), located behind the passenger side bulk head cover, and a number of sensing and actuating devices. The sensors supply the ECM with input signals which relate to the engine operating conditions and driver requirements. The sensor information is evaluated by the ECM using the results to activate the appropriate response from the actuating devices. The system provides the necessary engine control accuracy and adaptability to:

- Minimize exhaust emissions and fuel consumption.
- Provide optimum driver control under all conditions.
- Minimize evaporative emissions.
- Provide system diagnostics.

In addition to these functions the ECM also interfaces with other vehicle systems through the controller area network (CAN).

Camshaft Position (CMP) Sensor

The camshaft position (CMP) sensors monitor the position of both camshafts to allow the ECM to control the phase of the inlet camshafts relative to the position of the crankshaft.

Knock Sensors (KS)

The knock sensors (KS) detect combustion knock within the engine cylinders and sends a signal to the ECM. The ECM uses this information to gradually adjust the ignition timing until the combustion knock is eliminated.

Mass Air flow (MAF) Sensor

The mass air flow (MAF) sensor informs the ECM of the rate of air flow entering the engine by producing a voltage which is proportional to the rate of air flow into the engine. The voltage produced by the MAF sensor increases as the rate of air flow increases. The ECM takes into account the density of the air entering the air intake system so that it is possible to maintain the required air to fuel ratio, and to compensate for variations in atmospheric pressure.

Integral to the MAF sensor is the intake air temperature (IAT) sensor which measures the temperature of the air entering the air intake system. The ECM uses this information to compensate for higher than normal air intake temperatures.

Fuel Rail Pressure (FRP) Sensor

The fuel rail pressure (FRP) sensor is a pressure transducer device. A vacuum pipe connects to the intake manifold for manifold pressure. The ECM receives a voltage from the FRP sensor which is proportional to the fuel pressure in the fuel injection supply manifold.

Manifold Absolute Pressure (MAP) Sensor

The manifold absolute pressure (MAP) sensor monitors the changes in pressure in the inlet manifold, sensing such changes as when the exhaust gas recirculation (EGR) valve is operated. If at any time the input signal to the ECM exceeds pre-defined thresholds due to low pressure readings for a calibrated period of time, a DTC is set.

Accelerator Pedal Position (APP) Sensor

The ECM monitors the angle of the accelerator pedal through the accelerator pedal position (APP) sensor. The APP sensor sends a signal to the ECM which is proportional to the angle of the accelerator. The APP sensor is connected to the accelerator pedal via an accelerator cable.

Throttle Position (TP) Sensor

The ECM monitors the angle of the throttle blade within the throttle housing through the throttle position (TP) sensor. The TP sensor sends a voltage to the ECM which is proportional to the angle of the throttle plate. The voltage from the TP sensor increases with the angle of the throttle plate. There are two sensor tracks within the TP sensor.

Crankshaft Position (CKP) Sensor

The crankshaft position (CKP) sensor is an inductive pulse generator, which scans protrusions on a pulse ring fitted to the front of the crankshaft to inform the ECM of the crankshaft position and speed. The CKP sensor produces an alternating voltage. The frequency of this voltage increases proportional to engine speed.

Engine Coolant Temperature (ECT) Sensor

The engine coolant temperature (ECT) sensor is a thermistor type sensor that provides an input signal to the ECM which is proportional to the engine coolant temperature. The ECT sensor is a negative temperature coefficient (NTC) sensor and its resistance decreases with a proportional increase in engine coolant temperature.

Oil Temperature Sensor

The oil temperature sensor is a thermistor type sensor that provides an input signal to the ECM which is proportional to the engine oil temperature.

Oil Pressure Sensor

The oil pressure switch is connected to the instrument cluster and is not directly part of the electronic engine control system.

Heated Oxygen Sensor (HO2S)

The heated oxygen sensor (HO2S) is a linear characteristic type sensor, fitted forward of the exhaust system catalytic converter. The ECM uses this as its primary sensor to measure the oxygen content of the exhaust gasses within the exhaust system to provide closed-loop fueling control.

Catalyst Monitor Sensor

The catalyst monitor sensor is a non-linear characteristic type sensor fitted to the exhaust system catalytic converter. The ECM uses this as its secondary sensor to measure the oxygen content of the exhaust gases within the exhaust after they have passed through the catalytic converter. As well as providing additional closed-loop fuelling control the ECM uses this information to determine the efficiency of the catalytic converter.

Variable Camshaft Timing Oil Control Solenoid - Vehicles without supercharger

The variable camshaft timing oil control solenoid is a hydraulic actuator, which advances and retards the inlet camshaft timing, thereby altering the camshaft to crankshaft phasing for optimum engine performance.

Intake Air Temperature (IAT) Sensor - Vehicles with supercharger

Vehicles with supercharger have an additional intake air temperature (IAT) sensor located on the right-hand charge air cooler. The IAT sensor measures the temperature of the air entering the charge air cooler. The ECM uses this information to compensate for higher than normal intake air temperatures.

Electronic Engine Controls - Electronic Engine Controls

Diagnosis and Testing

Inspection and Verification

1. **1.** Verify the customer concern.
2. **2.** Confirm which, if any, warning lights and/or messages were displayed on the instrument cluster.

• NOTE: If any warning lights and/or messages were displayed when the fault occurred, refer to the Driver Information table for DTCs associated with the display, then to the DTC index table for possible sources and actions. Some warnings will appear to clear when the ignition is cycled. This is often because the warning has flagged as a result of one of the vehicle's on-board diagnostic routines having run to detect the fault. If the same routine is not run when the ignition is switched ON, the warning will not reflag until the routine does run. See the DTC summaries for drive cycle routines.

3. **3.** Visually inspect for obvious signs of mechanical or electrical damage.

Visual Inspection Chart

Mechanical	Electrical
• Engine oil level • Cooling system coolant level • Fuel level • Fuel Contamination/grade/quality • Throttle body • Poly-vee belt	• Fuses. • Wiring harness • Electrical connector(s) • Sensor(s) • Engine control module (ECM) • Transmission control module

4. **4.** Verify the following systems are working correctly:

- Air intake system
- Cooling system
- Charging system
- Fuel charging system
- Ignition system

5. **5.** If an obvious cause for an observed or reported concern is found, correct the cause (if possible) before proceeding to the next step
6. **6.** Where the Jaguar approved diagnostic system is available, complete the S93 report before clearing any or all fault codes from the vehicle.

• NOTE: If a DTC cannot be cleared, then there is a permanent fault present that flags again as soon as it is cleared. (The exception to this is P1260, which will only clear following an ignition OFF/ON cycle after rectification.)

7. **7.** If the cause is not visually evident and the Jaguar approved diagnostic system is not available, use a fault code reader to retrieve the fault codes before proceeding to the Diagnostic Trouble Code (DTC) Index Chart, or the Symptom Chart if no DTCs are set.
8. **8.** Using the Jaguar approved diagnostic system where available, and a scan tool where not, check the freeze frame data for information on the conditions applicable when the fault was flagged. The format of this will vary, depending on the tool used, but can provide information useful to the technician in diagnosing the fault.

CAUTION: When probing connectors to take measurements in the course of the pinpoint tests, use the adaptor kit, part number 3548-1358-00.

• NOTE: When performing electrical voltage or resistance tests, always use a digital multimeter (DMM) accurate to 3 decimal places, and with an up-to-date calibration certificate. When testing resistance, always take the resistance of the DMM leads into account.

• NOTE: Check and rectify basic faults before beginning diagnostic routines involving pinpoint tests.

Symptom Chart

Symptom (general)	Symptom (specific)	Possible source	Action
Non-Start	Engine does not crank	• Security system /Immobiliser engaged • ECM relay • Battery • Park/Neutral switch • Starting system • Harness • Engine siezed	Check for DTCs. Contact dealer technical support for information on security system. For starting system, REFER to: Starting System (303-06 Starting System, Diagnosis and Testing). For ECM relay tests, GO to Pinpoint Test AF. For battery information, refer to the battery care manual. For Park/Neutral tests, REFER to: External Controls (307-05 Automatic Transmission/Transaxle External Controls, Diagnosis and Testing). For engine information, REFER to: Engine (303-01 Engine, Diagnosis and Testing).
	Engine cranks, but does not fire	• Engine breather system disconnected/restricted • Ignition system • Fuel system • Harness • CKP sensor • ECM fault	Check engine breather system, REFER to: Engine Emission Control (303-08 Engine Emission Control, Diagnosis and Testing). For ignition system, REFER to: Engine Ignition (303-07 Engine Ignition, Diagnosis and Testing). For fuel system, REFER to: Fuel Charging and Controls (303-04 Fuel Charging and Controls, Diagnosis and Testing). For CKP tests, GO to Pinpoint Test Q. Contact Dealer technical support for advice on possible ECM failure.
	Engine cranks and fires, but will not start	• Purge valve • Fuel pump • Coolant temperature sensor • Spark plugs • Check for water ingress into spark plug wells	For evaporative emissions components, REFER to: Evaporative Emissions (303-13 Evaporative Emissions, Diagnosis and Testing). For fuel system, REFER to: Fuel Charging and Controls (303-04 Fuel Charging and Controls, Diagnosis and Testing).

Symptom (general)	Symptom (specific)	Possible source	Action
		• HT short to ground (tracking) check rubber boots for cracks/damage • Ignition coil failure(s) • Harness	For ECT sensor tests, GO to Pinpoint Test C. For ignition system REFER to: Engine Ignition (303-07 Engine Ignition, Diagnosis and Testing).
Difficult to start	Difficult to start cold	• Check coolant anti-freeze content • Battery • CKP sensor • EGR valve stuck open • Fuel pump • Coolant temperature sensor • Purge valve	For battery information, refer to the battery care manual. For CKP sensor tests, GO to Pinpoint Test Q. For EGR system information, REFER to: Engine Emission Control (303-08 Engine Emission Control, Diagnosis and Testing). For fuel system, REFER to: Fuel Charging and Controls (303-04 Fuel Charging and Controls, Diagnosis and Testing). For ECT sensor tests, GO to Pinpoint Test C. For evaporative emissions components, REFER to: Evaporative Emissions (303-13 Evaporative Emissions, Diagnosis and Testing).
	Difficult to start hot	• Injector leak • Fuel temperature sensor • IAT sensor • MAF sensor • Purge valve • Fuel pump • Ignition system • Coolant temperature sensor	For fuel system, REFER to: Fuel Charging and Controls (303-04 Fuel Charging and Controls, Diagnosis and Testing). For fuel temperature sensor tests, GO to Pinpoint Test AI. For IAT sensor tests, GO to Pinpoint Test B. For MAF sensor tests, GO to Pinpoint Test A. For evaporative emissions components, REFER to: Evaporative Emissions (303-13 Evaporative Emissions, Diagnosis and Testing). For ECT sensor tests, GO to Pinpoint Test C.
	Difficult to start after hot soak (vehicle standing after engine has reached operating temperature)	• Injector leak • Fuel temperature sensor • IAT sensor • MAF sensor • Purge valve • Fuel pump • Ignition system • Coolant temperature sensor	
	Engine cranks too fast/slow	• Compressions high/low • Battery • Starting system	Check compressions, REFER to: Engine (303-01 Engine, Diagnosis and Testing). For battery information, refer to the battery care manual. For starting system, REFER to: Starting System (303-06 Starting System, Diagnosis and Testing).
Engine stalls	Engine stalls soon after start	• Breather system disconnected/restricted • ECM relay • Harness • MAF sensor • Coolant temperature sensor • Ignition system • Air filter restricted • Fuel lines • Fuel pressure sensor • Air leakage	For breather system, REFER to: Engine Emission Control (303-08 Engine Emission Control, Diagnosis and Testing). For ECM relay tests, GO to Pinpoint Test AF. For MAF sensor tests, GO to Pinpoint Test A. For ECT sensor tests, GO to Pinpoint Test C. For ignition system, REFER to: Engine Ignition (303-07 Engine Ignition, Diagnosis and Testing). For air filter information, REFER to: Intake Air Distribution and Filtering (303-12 Intake Air Distribution and Filtering, Diagnosis and Testing). For fuel system, fuel pressure sensor tests, REFER to: Fuel Charging and Controls (303-04 Fuel Charging and Controls, Diagnosis and Testing). For intake system information, REFER to: Intake Air Distribution and Filtering (303-12 Intake Air Distribution and Filtering, Diagnosis and Testing).
	Engine stalls on overrun	• ECM relay • Throttle sensors	For ECM relay tests, GO to Pinpoint Test AF. For throttle sensor tests, GO to Pinpoint Test E. For fuel system, REFER to: Fuel Charging and Controls (303-04 Fuel Charging and Controls, Diagnosis and Testing).
	Engine stalls at steady speed	• ECM relay • CKP sensor • Throttle sensors • Harness	For ECM relay tests, GO to Pinpoint Test AF. For fuel system, REFER to: Fuel Charging and Controls (303-04 Fuel Charging and Controls, Diagnosis and Testing). For CKP sensor tests, GO to Pinpoint Test Q. For throttle sensor tests, GO to Pinpoint Test E.
	Engine stalls with cruise control enabled	• ECM relay • Harness	For ECM relay tests, GO to Pinpoint Test AF.
	Engine stalls when maneuvering	• ECM relay • Throttle sensors • Additional engine loads (PAS, air conditioning, etc) • Transmission malfunction • CAN network malfunction	For ECM relay tests, GO to Pinpoint Test AF. For throttle position sensor tests, GO to Pinpoint Test E. For accessory drive information, REFER to: Accessory Drive (303-05 Accessory Drive, Diagnosis and Testing). For transmission information, REFER to: Diagnostic Strategy (307-01 Automatic Transmission/Transaxle, Diagnosis and Testing). For CAN network tests, REFER to: Communications Network (418-00 Module Communications Network, Diagnosis and Testing).
Poor driveability	Engine hesitates/poor acceleration	• Fuel pump • Injector leak • Fuel pressure • Fuel lines • Air leakage	For fuel pump, fuel pressure sensor, fuel line and injector tests, REFER to: Fuel Charging and Controls (303-04 Fuel Charging and Controls, Diagnosis and Testing). For intake system,

Symptom (general)	Symptom (specific)	Possible source	Action
		• Throttle sensors • Throttle motor • Ignition system • Exhaust gas recirculation • Oxygen sensors • Transmission malfunction • Restricted pedal travel (carpet, etc) • APP sensor	REFER to: Intake Air Distribution and Filtering (303-12 Intake Air Distribution and Filtering, Diagnosis and Testing). For throttle position sensor tests, GO to Pinpoint Test E. For throttle motor tests, GO to Pinpoint Test X. For ignition system, REFER to: Engine Ignition (303-07 Engine Ignition, Diagnosis and Testing). For exhaust gas recirculation, REFER to: Engine Emission Control (303-08 Engine Emission Control, Diagnosis and Testing). Check for DTCs relating to Oxygen sensors. Refer to the DTC index for pinpoint tests for DTC set. For transmission information, REFER to: Diagnostic Strategy (307-01 Automatic Transmission/Transaxle, Diagnosis and Testing). Check accelerator pedal travel. For APP sensor tests, GO to Pinpoint Test V. GO to Pinpoint Test W.
	Engine backfires	• Fuel pump • Fuel lines • Air leakage • MAF sensor • Oxygen sensors • Ignition system • Sticking VCT hub • APP sensor	For fuel pump and lines tests, REFER to: Fuel Tank and Lines (310-01 Fuel Tank and Lines, Diagnosis and Testing). For intake system, REFER to: Intake Air Distribution and Filtering (303-12 Intake Air Distribution and Filtering, Diagnosis and Testing). For MAF sensor tests, GO to Pinpoint Test A. Check for DTCs relating to Oxygen sensors. Refer to the DTC index for pinpoint tests for DTC set. For ignition system, REFER to: Engine Ignition (303-07 Engine Ignition, Diagnosis and Testing). For VCT information, REFER to: Engine (303-01 Engine, Diagnosis and Testing). For APP sensor tests, GO to Pinpoint Test V. GO to Pinpoint Test W.
	Engine surges	• Fuel pump • Fuel lines • MAF sensor • Harness • Throttle sensors • Throttle motor • Ignition system	Check fuel pressure. For fuel line information, REFER to: Fuel Tank and Lines (310-01 Fuel Tank and Lines, Diagnosis and Testing). For MAF sensor, throttle sensor, and throttle motor relay tests, REFER to: Electronic Engine Controls (303-14 Electronic Engine Controls, Diagnosis and Testing). For ignition system, REFER to: Engine Ignition (303-07 Engine Ignition, Diagnosis and Testing).
	Engine detonates/knocks	• KS/circuit malfunction • Fuel pump • Fuel lines • Fuel pressure sensor • MAF sensor • Oxygen sensors • Air leakage • Sticking VCT hub • BARO sensor malfunction	For KS circuit tests, GO to Pinpoint Test O. GO to Pinpoint Test P. Check fuel pressure. For fuel line information, REFER to: Fuel Tank and Lines (310-01 Fuel Tank and Lines, Diagnosis and Testing). For fuel pressure sensor, REFER to: Fuel Charging and Controls (303-04 Fuel Charging and Controls, Diagnosis and Testing). For MAF sensor tests, GO to Pinpoint Test A. Check for DTCs relating to Oxygen sensors. Refer to the DTC index for pinpoint tests for DTC set. For intake system, REFER to: Intake Air Distribution and Filtering (303-12 Intake Air Distribution and Filtering, Diagnosis and Testing). Check DTCs for VCT range/performance fault. For VCT information, REFER to: Engine (303-01 Engine, Diagnosis and Testing). For BARO sensor, contact dealer technical support for advice on possible ECM failure
	No throttle response	• APP sensor malfunction • Throttle sensors • Throttle motor	For APP sensor tests, GO to Pinpoint Test V. GO to Pinpoint Test W. For throttle position sensor tests, GO to Pinpoint Test E. For throttle motor tests, GO to Pinpoint Test X.
	Cruise control inhibited or disabled	• Default mode enabled • Cruise control switch • Throttle sensors • Stop lamp switch	Check message center for default message. For cruise control switches, REFER to: Speed Control (310-03 Speed Control, Diagnosis and Testing). For throttle position sensor tests, GO to Pinpoint Test E. Check electrical guides for stop light switch information.
	Poor throttle response	• APP sensor malfunction • Throttle sensors • Coolant temperature sensor • MAF sensor • Transmission malfunction • Traction control event • Air leakage • Breather system disconnected/restricted	For APP sensor tests, GO to Pinpoint Test W. GO to Pinpoint Test V. For throttle position sensor tests, GO to Pinpoint Test E. For ECT sensor tests, GO to Pinpoint Test C. For MAF sensor tests, GO to Pinpoint Test A. For transmission information, REFER to: Diagnostic Strategy (307-01 Automatic Transmission/Transaxle, Diagnosis and Testing). For intake system, REFER to: Intake Air Distribution and Filtering (303-12 Intake Air Distribution and Filtering, Diagnosis and Testing). For breather system information, REFER to: Engine Emission Control (303-08 Engine Emission Control, Diagnosis and Testing).

Symptom (general)	Symptom (specific)	Possible source	Action
	Engine defaults, warning light and messages. Refer to the Driver Information table	• Park/Neutral switch • Throttle sensors • MAF sensor • Coolant temperature sensor • Harness	For Park/Neutral tests, REFER to: External Controls (307-05 Automatic Transmission/Transaxle External Controls, Diagnosis and Testing). For throttle position sensor tests, GO to Pinpoint Test E. For MAF sensor tests, GO to Pinpoint Test A. For ECT sensor tests, GO to Pinpoint Test C.

Driver Information

Driver Information

• NOTE: Use this table to identify DTCs associated with the message centre display, then refer to the DTC index for possible sources and actions.

• NOTE: For definitions of Default Modes, see the foot of this table.

Warning light	Message	Default Mode	DTC
Red	Engine systems fault	Engine shut-down (all cylinders fuel cut)	P1224
Red	Engine systems fault	Limp-Home	P1229
Red	Engine systems fault	Limp-Home	P0121, P0122, P0123, P0222, P0223
Red	Engine systems fault	Limp-Home	P1251, P1631
Red	Engine systems fault	Limp-Home	P1611
Red	Engine systems fault	Limp-Home	P1633
Red	Engine systems fault	High idle	P1344, P1122, P1123, P1215, P1216
Red	Restricted Performance	Limp-Home unavailable	P1254
Amber	Restricted Performance	Limp-Home unavailable	P1250
Red	Restricted Performance	Safety redundancy	P1657, P1658
Red	Restricted Performance	Safety redundancy	P16634
Amber	Cruise not available	MAF (runs normally, limited to 3000 RPM)	P0101, P0102, P0103, P0104
Amber	Cruise not available	None	P1571
Amber	Cruise not available	None	P0568
Amber	Cruise not available	None	P0567
Amber	Cruise not available	None	P0570
Amber	Cruise not available	None	P0569
Amber	Cruise not available	None	P0566
Amber	Cruise not available	None	P1697
Amber	Cruise not available	None	P1696
Amber	Restricted Performance	Engine speed limited	P0116, P0117, P0118, P0125
Amber	Restricted Performance	Engine speed limited	P0101, P0102, P0103, P0104
Amber	Restricted Performance	Engine speed limited	P0300, P0301, p0302, P0303, P0304, P0305, P0306, P0307, P0308, P1313, P1314
Amber	Restricted Performance	Engine speed limited	P0327, P0328, P0332, P0333, P1648
Amber	Restricted Performance	Engine speed limited	P0351, P0352, P0353, P0354, P0355, P0356, P0357, P0358, P1367, P1368
Amber	Restricted Performance	Engine speed limited	P0171, P0172, P0174, P0175
Amber	Restricted Performance	Engine speed limited	
Amber	Restricted Performance	Engine speed limited	P0201, P0202, P0203, P0204, P0205, P0206, P0207, P0208
Amber	Restricted Performance	Engine speed limited	P0335, P0336
Amber	Restricted Performance	Engine speed limited, Reverse throttle progression enabled	P1642
Amber	Restricted Performance	Engine speed limited, Reverse throttle progression enabled	P1643
Amber	Restricted Performance	Engine speed limited, Reverse throttle progression enabled	P0096, P0097, P0098
Amber	Restricted Performance	Engine speed limited, Reverse throttle progression enabled	P1474
Amber	Restricted Performance	Engine speed limited	P1234, P1236, P1338
Amber	None	None	P0506, P0507
Amber	None	None	P1656
Amber	Gearbox fault/Restricted performance	Gearbox default to set gear	P0725
Amber	Gearbox fault/Restricted performance	Gearbox default to set gear	P1796
Amber	Gearbox fault/Restricted performance	Gearbox default to set gear	P0701
Amber	Gearbox fault/Restricted performance	Gearbox default to set gear	P1603
Amber	Gearbox fault/Restricted performance	Gearbox default to set gear	P0605
Amber	Gearbox fault/Restricted performance	Gearbox default to set gear	P1719
Amber	Gearbox fault/Restricted performance	Gearbox default to set gear	P0720
Amber	Gearbox fault/Restricted performance	Gearbox default to set gear	P0715
Amber	Gearbox fault/Restricted performance	Gearbox default to set gear	P0705
Amber	Gearbox fault/Restricted performance	Gearbox default to set gear	P0610
Amber	Gearbox fault/Restricted performance	Gearbox default to set gear	P0606
Amber	Gearbox fault/Restricted performance	Gearbox default to set gear	P0750

Warning light	Message	Default Mode	DTC
Amber	Gearbox fault/Restricted performance	Gearbox default to set gear	P0753
Amber	Gearbox fault/Restricted performance	Gearbox default to set gear	P0755
Amber	Gearbox fault/Restricted performance	Gearbox default to set gear	P0758
Amber	Gearbox fault/Restricted performance	Gearbox default to set gear	P0760
Amber	Gearbox fault/Restricted performance	Gearbox default to set gear	P0763
Amber	Gearbox fault/Restricted performance	Gearbox default to set gear	P0765
Amber	Gearbox fault/Restricted performance	Gearbox default to set gear	P0768
Amber	Gearbox fault/Restricted performance	Gearbox default to set gear	P0770
Amber	Gearbox fault/Restricted performance	Gearbox default to set gear	P0773
Amber	Gearbox fault/Restricted performance	Gearbox default to set gear	P0740
Amber	Gearbox fault/Restricted performance	Gearbox default to set gear	P0743
Amber	Gearbox fault/Restricted performance	Gearbox default to set gear	P0787
Amber	Gearbox fault/Restricted performance	Gearbox default to set gear	P0788
Amber	Gearbox fault/Restricted performance	Gearbox default to set gear	P0730
Amber	Gearbox fault/Restricted performance	Gearbox default to set gear	P0731
Amber	Gearbox fault/Restricted performance	Gearbox default to set gear	P0732
Amber	Gearbox fault/Restricted performance	Gearbox default to set gear	P0733
Amber	Gearbox fault/Restricted performance	Gearbox default to set gear	P0734
Amber	Gearbox fault/Restricted performance	Gearbox default to set gear	P0735
Amber	Gearbox fault/Restricted performance	Gearbox default to set gear	P0729
Amber	Gearbox fault/Restricted performance	Gearbox default to set gear	P0781
Amber	Gearbox fault/Restricted performance	Gearbox default to set gear	P0782
Amber	Gearbox fault/Restricted performance	Gearbox default to set gear	P0783
Amber	Gearbox fault/Restricted performance	Gearbox default to set gear	P0784
Amber	Gearbox fault/Restricted performance	Gearbox default to set gear	P0829
Amber	Gearbox fault/Restricted performance	Engine speed limited, reverse throttle progression enabled	P1797
Amber	Gearbox fault/Restricted performance	Gearbox default to set gear	P0641
Amber	Gearbox fault/Restricted performance	Gearbox default to set gear	P0651
Amber	Gearbox fault/Restricted performance	Gearbox default to set gear	P0860
Amber	Gearbox fault/Restricted performance	Limp-home	P1783

Default mode Definitions

LIMP-HOME MODE

- Throttle motor off
- Throttle motor relay off
- Throttle motor circuit off
- Fuel intervention
- Cruise control inhibited

LIMP-HOME UNAVAILABLE

- Power limitation
- Vehicle speed limited to 120 kph
- Reverse throttle progression enabled
- Cruise Control Inhibited

REVERSE THROTTLE PROGRESSION

- Throttle opening limited to maximum 30%

• NOTE: The throttle operation uses the same map as for reverse gear.

ENGINE SPEED LIMITED

- Engine runs normally, up to 3000 RPM
- Engine speed restricted to 3000 RPM maximum, by fuel cut-off

HIGH IDLE

- Throttle valve kept in fixed position by motor
- Cruise Control Inhibited

SAFETY REDUNDANCY

- Power limitation
- Vehicle speed limited to 120 kph
- Reverse throttle progression enabled
- Cruise Control Inhibited

Diagnostic Trouble Code (DTC) index

DTC	Description	Possible Source	Action
P0010	Right-hand variable camshaft timing (VCT) circuit malfunction	• VCT solenoid control valve disconnected • VCT solenoid valve to ECM PWM drive circuit; open circuit, short circuit, high resistance • VCT solenoid failure	For Right-hand VCT tests, GO to Pinpoint Test AC.
P0020	Left-hand variable camshaft timing (VCT) circuit malfunction	• VCT solenoid control valve disconnected • VCT solenoid valve to ECM PWM drive circuit; open circuit, short circuit, high resistance • VCT solenoid failure	For Left-hand VCT tests, GO to Pinpoint Test AD.
P0031	Right-hand HO2S heater control circuit, low current	• HO2S heater power supply circuit open circuit • HO2S heater control circuit open circuit, high resistance • HO2S heater ground circuit fault (EM80, pin 29; EM80, pin 30) • HO2S heater failure • HO2S connections	For HO2S tests, GO to Pinpoint Test G.
P0032	Right-hand HO2S heater control circuit, high current	• HO2S heater control circuit short circuit to ground • HO2S heater ground circuit fault (EM80, pin 29; EM80, pin 30) • HO2S heater failure • HO2S connections	For HO2S tests, GO to Pinpoint Test G.
P0037	Right-hand catalyst monitor sensor heater control circuit, low resistance	• Catalyst monitor sensor heater control circuit short circuit to ground • Catalyst monitor sensor heater failure • Catalyst monitor sensor connections	For catalyst monitor sensor tests, GO to Pinpoint Test I.
P0038	Right-hand catalyst monitor sensor heater control circuit, high resistance	• Catalyst monitor sensor heater control circuit open circuit, high resistance • Catalyst monitor sensor heater failure • Catalyst monitor sensor connections	For catalyst monitor sensor tests, GO to Pinpoint Test I.
P0051	Left-hand HO2S heater control circuit low current	• HO2S heater power supply circuit open circuit • HO2S heater control circuit open circuit, high resistance • HO2S heater ground circuit fault (EM80, pin 81; EM80, pin 82) • HO2S connections • HO2S heater failure	For heater control tests, GO to Pinpoint Test K.
P0052	Left-hand HO2S heater control circuit, high current	• HO2S heater control circuit short circuit to ground • HO2S heater ground circuit fault (EM80, pin 81; EM80, pin 82) • HO2S heater failure	For heater control tests, GO to Pinpoint Test K.
P0057	Left-hand catalyst monitor sensor heater control circuit, low resistance	• Catalyst monitor sensor heater control circuit short circuit to ground • Catalyst monitor sensor heater failure	For heater control circuit tests, GO to Pinpoint Test L.
P0058	Left-hand catalyst monitor sensor heater control circuit, high resistance	• Catalyst monitor sensor heater control circuit open circuit, high resistance • Catalyst monitor sensor heater failure	For heater control circuit tests, GO to Pinpoint Test L.

DTC	Description	Possible Source	Action
P0096	Intake air temperature (IAT) sensor 2 circuit range/performance	• Intercooler coolant pump malfunction • IAT sensor 2 disconnected • IAT sensor 2 to ECM sensing circuit open circuit • IAT sensor 2 failure	For intercooler coolant pump tests, GO to Pinpoint Test AL. For IAT2 tests, GO to Pinpoint Test AH.
P0097	Intake air temperature (IAT) sensor 2 circuit high voltage (low air temperature)	• IAT sensor 2 disconnected • IAT sensor 2 to ECM wiring; open circuit or high resistance • IAT sensor 2 to ECM sensing circuit; short circuit to B+ voltage • IAT sensor 2 failure	For IAT2 tests, GO to Pinpoint Test AH.
P0098	Intake air temperature (IAT) sensor 2 circuit low voltage (high air temperature)	• IAT sensor 2 to ECM wiring; short circuit to ground • IAT sensor 2 failure	For IAT2 tests, GO to Pinpoint Test AH.
P0101	Mass air flow (MAF) sensor circuit range/performance	• Blocked air filter • Air intake leak • Engine breather leak • Throttle control malfunction • MAF sensor to ECM sensing circuit; high resistance, intermittent short circuit to ground • MAF sensor supply circuit; high resistance • MAF sensor failure • Throttle adaption fault (check throttle position voltage at ignition ON)	Check air filter element, air intake system for leaks. For further information, REFER to: Intake Air Distribution and Filtering (303-12 Intake Air Distribution and Filtering, Diagnosis and Testing). check engine breather system. For further information, REFER to: Engine Emission Control (303-08 Engine Emission Control, Diagnosis and Testing). Check for associated codes related to throttle control. For MAF sensor tests, GO to Pinpoint Test A. Throttle adaption is automatic at key on
P0102	Mass air flow (MAF) sensor circuit low voltage	• Blocked air filter • Air intake leak between MAF sensor and throttle • MAF sensor to ECM sensing circuit; high resistance, open circuit, intermitent short circuit to ground • MAF sensor supply circuit; open circuit, short circuit to ground • MAF sensor failure	Check air filter element, air intake system for leaks. For further information, REFER to: Intake Air Distribution and Filtering (303-12 Intake Air Distribution and Filtering, Diagnosis and Testing). For MAF sensor tests, GO to Pinpoint Test A.
P0103	Mass air flow (MAF) sensor sensing circuit high voltage	• MAF sensor to ECM sensing circuit; short circuit to B+ voltage • MAF sensor to ECM ground circuit; open circuit • MAF sensor failure	For MAF sensor tests, GO to Pinpoint Test A.
P0105	Manifold absolute pressure (MAP) sensor range/performance	• Intake manifold air leak (loose or missing component) • MAP sensor to ECM circuit(s) fault • MAP sensor failure • Throttle adaption fault (check throttle position voltage at ignition ON)	Check air intake system. For further information, REFER to: Intake Air Distribution and Filtering (303-12 Intake Air Distribution and Filtering, Diagnosis and Testing). For MAP sensor circuit tests, GO to Pinpoint Test AG. Throttle adaption is automatic at key on
P0106	BARO sensor circuit range/performance	• BARO failure (internal ECM fault)	Contact dealer technical support for advice on possible ECM failure.
P0107	BARO sensor circuit, low voltage	• BARO failure (internal ECM fault)	Contact dealer technical support for advice on possible ECM failure.
P0108	BARO circuit, high voltage	• BARO failure (internal ECM fault)	Contact dealer technical support for advice on possible ECM failure.
P0111	Intake air temperature (IAT) sensor range/performance	• Blocked air filter • Air intake leak • Engine breather leak • IAT sensor to ECM wiring; open circuit or high resistance • IAT sensor to ECM sensing circuit; short circuit to high voltage • IAT sensor failure	Check air filter element, air intake system for leaks. For further information, REFER to: Intake Air Distribution and Filtering (303-12 Intake Air Distribution and Filtering, Diagnosis and Testing). check engine breather system. For further information, REFER to: Engine Emission Control (303-08 Engine Emission Control, Diagnosis and Testing). For IAT sensor tests, GO to Pinpoint Test B.
P0112	Intake air temperature (IAT) sensor circuit high voltage (low air temperature)	• IAT sensor disconnected • IAT sensor to ECM wiring; open circuit or high resistance • IAT sensor to ECM sensing circuit short circuit to B+ voltage • IAT sensor failure	For IAT sensor tests, GO to Pinpoint Test B.

DTC	Description	Possible Source	Action
P0113	Intake air temperature (IAT) sensor circuit low voltage (high air temperature)	• IAT sensor to ECM wiring short circuit to ground • IAT sensor failure	For IAT sensor tests, GO to Pinpoint Test B.
P0116	Engine coolant temperature (ECT) sensor circuit range/performance	• ECT sensor disconnected • Low coolant level • Contaminated coolant • Thermostat failure • ECT sensor to ECM sensing circuit; open circuit, high resistance when hot, intermittent high resistance • ECT sensor failure • Engine cooling fan stuck on high speed • Above normal air flow through engine compartment, due to accident damage and/or missing panels	Refer to visual inspection table in this section, check sensor connections, coolant level and condition, thermostat operation. For ECT sensor tests, GO to Pinpoint Test C.
P0117	Engine coolant temperature (ECT) sensor sensing circuit high voltage (low coolant temperature)	• ECT sensor disconnected • ECT sensor to ECM sensing circuit; high resistance, open circuit, short circuit to B+ voltage • ECT sensor failure	For ECT sensor tests, GO to Pinpoint Test C.
P0118	Engine coolant temperature (ECT) sensor sensing circuit low voltage (high coolant temperature)	• Engine overheat condition • ECT sensor to ECM wiring short circuit to ground • ECT sensor failure	Check for overheating, for further information, REFER to: Engine Cooling (303-03A Engine Cooling, Description and Operation). For ECT sensor tests, GO to Pinpoint Test C.
P0121	Throttle position (TP) sensor circuit range/performance (TP1 compared to TP2)	• TP sensor to ECM wiring; open circuit, high resistance • TP sensor to ECM sensing circuits; (TP 1 or TP 2) short circuit to B+ voltage • TP sensor failure	For TP sensor tests, GO to Pinpoint Test D.
P0122	Throttle position (TP) sensor circuit 1 low voltage	• TP sensor to ECM sensing circuit (TP1); open circuit, short circuit to ground, high resistance • TP sensor failure	For TP sensor tests, GO to Pinpoint Test D.
P0123	Throttle position (TP) sensor circuit 1 high voltage	• TP sensor to ECM sensing circuit (TP1); short circuit to high voltage • TP sensor failure	For TP sensor tests, GO to Pinpoint Test D.
P0125	Engine coolant temperature (ECT) sensor response (for closed loop fuel control) (Coolant thermostat monitor)	• ECT sensor disconnected • Low coolant level • Contaminated coolant • Thermostat failure • ECT sensor to ECM sensing circuit; high resistance, open circuit or short circuit to high voltage • Engine cooling fan stuck on high speed • Above normal air flow through engine compartment, due to accident damage and/or missing panels	Refer to visual inspection table in this section, check sensor connections, coolant level and condition, thermostat operation. For ECT sensor tests, GO to Pinpoint Test C. Check for associated codes related to cooling fan. Check the vehicle for panel damage.
P0128	Coolant thermostat range/performance	• Contaminated coolant • Engine coolant thermostat failure • ECT sensor failure • ECT sensor DTC may also be flagged	Check coolant level and condition, check thermostat operation, REFER to: Engine Cooling (303-03A Engine Cooling, Description and Operation). Check for associated codes related to ECT sensor.
P0131	Right-hand H02S sensing circuit low current (universal oxygen sensor; lean condition at ECM - high current at sensor)	• H02S disconnected • H02S to ECM variable current circuit fault. (HO2S pin 3) • ECM to HO2S constant current circuit fault (HO2S pin 4) • H02S failure	For HO2S tests, GO to Pinpoint Test F.
P0132	Right-hand H02S sensing circuit high current (universal oxygen sensor; rich condition at ECM - low current at sensor)	• H02S disconnected • H02S to ECM variable current circuit fault. (HO2S pin 3) • ECM to HO2S constant current circuit fault (HO2S pin 4) • H02S failure	For HO2S tests, GO to Pinpoint Test F.
P0133	Right-hand H02S sensing circuit slow response	• Engine misfire • H02S disconnected • H02S mechanical damage • H02S to ECM wiring fault • H02S short circuit to ground • H02S to ECM wiring shield	Check for associated codes related to misfire, (P0300 to P0308) inspect the HO2S for connection/damage. For HO2S sensor diagnosis, GO to Pinpoint Test F. For HO2S heater diagnosis, GO to Pinpoint Test G. Check for exhaust leak, for further information,

DTC	Description	Possible Source	Action
		open circuit • HO2S heater circuit fault • H02S failure • Exhaust leak • Catalyst efficiency decrease • Low exhaust temperature • Injector flow partially blocked	REFER to: Exhaust System (309-00 Exhaust System, Diagnosis and Testing). Exhaust temperature will be low if misfire/poor fuel supply condition exists. Catalytic converter efficiency will be poor until it reaches "light-off".
P0137	Right-hand catalyst monitor sensor sensing circuit low voltage	• Catalyst monitor sensor disconnected • Catalyst monitor sensor to ECM wiring open circuit • Catalyst monitor sensor short circuit to ground • Catalyst monitor sensor failure	For catalyst monitor sensor tests, GO to Pinpoint Test H.
P0138	Right-hand catalyst monitor sensor sensing circuit high voltage	• Catalyst monitor sensor sensing circuit short circuit to high voltage • Catalyst monitor sensor ground braided shield open circuit • Catalyst monitor sensor failure	For catalyst monitor sensor tests, GO to Pinpoint Test H.
P0140	Right-hand catalyst monitor sensor sensing circuit no activity	• Catalyst monitor sensor disconnected • Catalyst monitor sensor mechanical damage • Catalyst monitor sensor to ECM wiring open circuit • Catalyst monitor sensor sensing circuit short circuit to high voltage • Catalyst monitor sensor RH short circuit to ground • Catalyst monitor sensor ground braided shield open circuit • Exhaust leak • Low exhaust temperature • Catalyst monitor sensor failure	Inspect the HO2S for connection/damage. For HO2S sensor diagnosis, GO to Pinpoint Test H. Check for exhaust leak, for further information, REFER to: Exhaust System (309-00 Exhaust System, Diagnosis and Testing). Exhaust temperature will be low if misfire/poor fuel supply condition exists. Catalytic converter efficiency will be poor until it reaches "light-off".
P0151	Left-hand H02S sensing circuit low current (universal oxygen sensor; lean condition at ECM - high current at sensor)	• H02S disconnected • H02S to ECM variable current circuit fault (HO2S pin 3) • ECM to HO2S constant current circuit fault (HO2S pin 4) • H02S failure	For HO2S tests, GO to Pinpoint Test J.
P0152	Left-hand H02S sensing circuit high current (universal oxygen sensor; rich condition at ECM - low current at sensor)	• H02S disconnected • H02S to ECM variable current circuit fault (HO2S pin 3) • ECM to HO2S constant current circuit fault (HO2S pin 4) • H02S failure	For HO2S tests, GO to Pinpoint Test J.
P0153	Left-hand H02S sensing circuit slow response	• Engine misfire • H02S disconnected • H02S mechanical damage • H02S to ECM wiring fault • H02S short circuit to ground • H02S to ECM wiring shield open circuit • HO2S heater circuit fault • H02S failure • Exhaust leak • Catalyst efficiency decrease • Low exhaust temperature • Injector flow partially blocked	Check for associated codes related to misfire, (P0300 to P0308) inspect the HO2S for connection/damage. For HO2S sensor diagnosis, GO to Pinpoint Test J. Check for exhaust leak, for further information, REFER to: Exhaust System (309-00 Exhaust System, Diagnosis and Testing). Exhaust temperature will be low if misfire/poor fuel supply condition exists. Catalytic converter efficiency will be poor until it reaches "light-off".
P0157	Left-hand catalyst monitor sensor sensing circuit low voltage	• Catalyst monitor sensor disconnected • Catalyst monitor sensor to ECM wiring open circuit • Catalyst monitor sensor short circuit to ground • Catalyst monitor sensor failure	For catalyst monitor sensor tests, GO to Pinpoint Test N.
P0158	Left-hand catalyst monitor sensor sensing circuit high voltage	• Catalyst monitor sensor sensing circuit; short circuit to high voltage • Catalyst monitor sensor ground braided shield open circuit • Catalyst monitor sensor failure	For catalyst monitor sensor tests, GO to Pinpoint Test N.

DTC	Description	Possible Source	Action
P0160	Left-hand catalyst monitor sensor sensing circuit no activity	• Catalyst monitor sensor disconnected • Catalyst monitor sensor mechanical damage • Catalyst monitor sensor to ECM wiring open circuit • Catalyst monitor sensor sensing circuit short circuit to high voltage • Catalyst monitor sensor LH short circuit to ground • Catalyst monitor sensor ground braided shield open circuit • Exhaust leak • Low exhaust temperature • Catalyst monitor sensor failure	Inspect the HO2S for connection/damage. For HO2S sensor diagnosis, GO to Pinpoint Test N. Check for exhaust leak, for further information, REFER to: Exhaust System (309-00 Exhaust System, Diagnosis and Testing). Exhaust temperature will be low if misfire/poor fuel supply condition exists. Catalytic converter efficiency will be poor until it reaches "light-off".
P0171	Right-hand cylinders combustion too lean	• Air intake leak between Mass air flow (MAF) sensor and cylinder head • Fuel injector restriction • Fuel filter / system restriction • Low fuel pump output • Fuel pressure (IP) sensor failure (low fuel pressure) • HO2S/catalyst monitor sensor harness wiring condition fault • Fuel temperature (EFT) sensor fault (low fuel temperature) • MAF sensor fault (low intake air flow) • Exhaust leak (before catalyst) • ECM receiving incorrect signal from one or more of the following sensors; ECT, MAF*, IAT, IP, EFT, TP.	For intake system, REFER to: Intake Air Distribution and Filtering (303-12 Intake Air Distribution and Filtering, Diagnosis and Testing). For fuel injector, REFER to: Fuel Charging and Controls (303-04 Fuel Charging and Controls, Diagnosis and Testing). For fuel filter and pump, REFER to: Fuel Tank and Lines (310-01 Fuel Tank and Lines, Diagnosis and Testing). For fuel pressure sensor, REFER to: Fuel Charging and Controls (303-04 Fuel Charging and Controls, Diagnosis and Testing). For HO2S/Catalyst monitor sensor tests, GO to Pinpoint Test F. GO to Pinpoint Test G. GO to Pinpoint Test H. GO to Pinpoint Test I. For exhaust system, REFER to: Exhaust System (309-00 Exhaust System, Diagnosis and Testing). Refer to individual pinpoint tests for sensors listed. * If this DTC is flagged, pay particular attention to the MAF sensor.
P0172	Right-hand cylinders combustion too rich	• Engine misfire • Restricted air filter • Leaking fuel injector(s) • Fuel pressure (IP) sensor failure (high fuel pressure) • Fuel temperature (EFT) sensor fault (high fuel temperature) • MAF sensor fault (high intake air flow) • HO2S/catalyst monitor sensor harness wiring condition fault • ECM receiving incorrect signal from one or more of the following sensors; ECT, MAF, IAT, IP, EFT, TP.	Check for "misfire detected" DTCs (P0300 to P0308) in this section. For intake system, REFER to: Intake Air Distribution and Filtering (303-12 Intake Air Distribution and Filtering, Diagnosis and Testing). For fuel injectors, fuel pressure sensor, REFER to: Fuel Charging and Controls (303-04 Fuel Charging and Controls, Diagnosis and Testing). Refer to individual pinpoint tests for sensors and circuits listed.
P0174	Left-hand cylinders combustion too lean	• Air intake leak between MAF sensor and cylinder head • Fuel filter/system restriction • Fuel injector restriction • Fuel pressure (IP) sensor failure (low fuel pressure) • Low fuel pump output • HO2S/catalyst monitor sensor harness wiring condition fault • Fuel temperature (EFT) sensor fault (low fuel temperature) • MAF sensor fault (low intake air flow) • Exhaust leak (before catalyst) • ECM receiving incorrect signal from one or more of the following sensors - ECT, MAF*, IAT, IP, EFT, TP.	For intake system, REFER to: Intake Air Distribution and Filtering (303-12 Intake Air Distribution and Filtering, Diagnosis and Testing). For fuel injector, REFER to: Fuel Charging and Controls (303-04 Fuel Charging and Controls, Diagnosis and Testing). For fuel filter and pump, REFER to: Fuel Tank and Lines (310-01 Fuel Tank and Lines, Diagnosis and Testing). For fuel pressure sensor, REFER to: Fuel Charging and Controls (303-04 Fuel Charging and Controls, Diagnosis and Testing). For HO2S/Catalyst monitor sensor tests, GO to Pinpoint Test J. GO to Pinpoint Test K. GO to Pinpoint Test L. For exhaust system, REFER to: Exhaust System (309-00 Exhaust System, Diagnosis and Testing). Refer to individual pinpoint tests for sensors listed. * If this DTC is flagged, pay particular attention to the MAF sensor.
P0175	Left-hand cylinders combustion too rich	• Engine misfire • Restricted air filter • Leaking fuel injector(s) • Fuel pressure (IP) sensor failure (high fuel pressure) • Fuel temperature (EFT) sensor fault (high fuel temperature) • MAF sensor fault (high intake air flow) • HO2S/catalyst monitor sensor harness wiring condition fault • ECM receiving incorrect signal from one or more of the	Check for "misfire detected" DTCs (P0300 to P0308) in this section. For intake system, REFER to: Intake Air Distribution and Filtering (303-12 Intake Air Distribution and Filtering, Diagnosis and Testing). For fuel injectors, fuel pressure sensor, REFER to: Fuel Charging and Controls (303-04 Fuel Charging and Controls, Diagnosis and Testing). Refer to individual pinpoint tests for sensors and circuits listed.

DTC	Description	Possible Source	Action
		following sensors; ECT, MAF, IAT, IP, EFT, TP.	
P0181	Fuel temperature (EFT) sensor range/performance	• EFT sensor disconnected • EFT sensor to ECM sensing circuit; high resistance, open circuit, short circuit to ground, short circuit to high voltage • EFT sensor to splice sensor ground circuit; high resistance, open circuit • Above normal air flow through engine compartment, due to accident damage and/or missing panels • EFT sensor failure	For EFT sensor sensing circuit tests, GO to Pinpoint Test AI. For sensor ground tests, GO to Pinpoint Test Z. Check the vehicle for panel damage
P0182	Fuel temperature (EFT) sensor circuit low voltage (high temperature)	• EFT sensor to ECM sensing circuit; short circuit to ground • EFT sensor to splice sensor ground circuit; short circuit • EFT sensor failure	For EFT sensor sensing circuit tests, GO to Pinpoint Test AI. For sensor ground tests, GO to Pinpoint Test Z.
P0183	Fuel temperature (EFT) sensor circuit high voltage (low temperature)	• EFT sensor disconnected • EFT sensor to ECM sensing circuit; high resistance, open circuit, short circuit to high voltage • EFT sensor to splice sensor ground circuit; high resistance, open circuit • EFT sensor failure	For EFT sensor sensing circuit tests, GO to Pinpoint Test AI. For sensor ground tests, GO to Pinpoint Test Z.
P0191	Fuel rail pressure (IP) sensor circuit range/performance	• Fuel filter/system restriction • Fuel system leak • Incorrect fuel pump output • IP sensor to ECM sensing circuit; high resistance, open circuit, short circuit to ground, short circuit to high voltage • IP sensor to splice in sensor supply circuit; high resistance, open circuit • IP sensor to splice in sensor ground circuit; high resistance, open circuit, short circuit to ground, short circuit to high voltage • IP sensor failure	For fuel filter, pump and lines, REFER to: Fuel Tank and Lines (310-01 Fuel Tank and Lines, Diagnosis and Testing). For IP sensor tests, REFER to: Fuel Charging and Controls (303-04 Fuel Charging and Controls, Diagnosis and Testing).
P0192	Fuel rail pressure (IP) sensor circuit low input	• IP sensor disconnected • IP sensor to ECM sensing circuit; open circuit or short circuit to ground • IP sensor to splice in sensor supply circuit; high resistance, open circuit • IP sensor failure	For IP sensor tests, REFER to: Fuel Charging and Controls (303-04 Fuel Charging and Controls, Diagnosis and Testing).
P0193	Fuel rail pressure (IP) sensor circuit high input	• IP sensor to ECM wiring (supply/sense) short circuit to each other • IP sensor to ECM sensing circuit; short circuit to high voltage • IP sensor to splice in sensor ground circuit; open circuit • IP sensor failure	For IP sensor tests, REFER to: Fuel Charging and Controls (303-04 Fuel Charging and Controls, Diagnosis and Testing).
P0196	Engine oil temperature (EOT) sensor range/performance	• EOT sensor to ECM sensing circuit; high resistance when hot, intermittent high resistance • EOT sensor failure • ECT sensor malfunction	For EOT sensor tests, GO to Pinpoint Test M. Check for ECT sensor DTCs
P0197	Engine oil temperature (EOT) sensor low voltage (high oil temperature)	• EOT sensor to ECM sensing circuit; short circuit to ground • EOT sensor failure	For EOT sensor tests, GO to Pinpoint Test M.
P0198	Engine oil temperature (EOT) sensor high voltage (low oil temperature)	• EOT sensor disconnected • EOT sensor to ECM sensing circuit; high resistance, open circuit or short circuit to B+ voltage • EOT sensor failure	For EOT sensor tests, GO to Pinpoint Test M.
P0201	Fuel injector circuit malfunction, Cyl 1	• Injector disconnected • Injector wiring open or short circuit • Injector failure	Check injector connections. For injector tests, REFER to: Fuel Charging and Controls (303-04 Fuel Charging and Controls, Diagnosis and Testing).
P0202	Fuel injector circuit malfunction, Cyl 3		

DTC	Description	Possible Source	Action
P0203	Fuel injector circuit malfunction, Cyl 5		
P0204	Fuel injector circuit malfunction, Cyl 7		
P0205	Fuel injector circuit malfunction, Cyl 2		
P0206	Fuel injector circuit malfunction, Cyl 4		
P0207	Fuel injector circuit malfunction, Cyl 6		
P0208	Fuel injector circuit malfunction, Cyl 8		
P0222	Throttle position (TP) sensor circuit 2 (TP2) low voltage	• TP sensor to ECM sensing circuit (TP2); open circuit, short circuit to ground or high resistance • TP sensor failure	For TP sensor tests, GO to Pinpoint Test E.
P0223	Throttle position (TP) sensor circuit 2 (TP2) high voltage	• TP sensor to ECM sensing circuit (TP2); short circuit to high voltage • TP sensor failure	For TP sensor tests, GO to Pinpoint Test E.
P0300	Random misfire detected	• ECM to ignition coil primary circuit faults (cylinder misfire detected DTCs also logged) • Fuel injector circuit fault(s) (injector DTCs also logged) • Ignition coil failure • Spark plug failure/fouled /incorrect gap • Cylinder compression low • Fuel delivery pressure (low/high) • Fuel injectors restricted/leaking • Fuel injectors continuously open • Fuel contamination • Worn camshaft/broken valve springs • Valve clearance adjustment • Ignition coil failure	For engine information, REFER to: Engine (303-01 Engine, Diagnosis and Testing). For fuel system, REFER to: Fuel Charging and Controls (303-04 Fuel Charging and Controls, Diagnosis and Testing). For ignition system, REFER to: Engine Ignition (303-07 Engine Ignition, Diagnosis and Testing).
P0301	Misfire detected, Cyl 1	Refer to P0300 possible sources	Refer to P0300 Actions
P0302	Misfire detected, Cyl 3		
P0303	Misfire detected, Cyl 5		
P0304	Misfire detected, Cyl 7		
P0305	Misfire detected, Cyl 2		
P0306	Misfire detected, Cyl 4		
P0307	Misfire detected, Cyl 6		
P0308	Misfire detected, Cyl 8		
P0327	Right-hand knock sensor (KS) sensing circuit out of range (low voltage)	• Poor sensor contact with cylinder block • KS to ECM sensing circuit; short circuit to ground • KS failure	Check KS for correct fitment, REFER to Knock sensor (KS) in this section. For KS tests, GO to Pinpoint Test O.
P0328	Right-hand knock sensor (KS) sensing circuit out of range (high voltage)	• Poor sensor contact with cylinder block • KS to ECM sensing circuit; high resistance, open circuit, short circuit to high voltage • KS failure	Check KS for correct fitment, REFER to: Knock Sensor (KS) LH (303-14 Electronic Engine Controls, Removal and Installation). For KS tests, GO to Pinpoint Test O.
P0332	Left-hand knock sensor (KS) sensing circuit out of range (low voltage)	• Poor sensor contact with cylinder block • KS to ECM sensing circuit; short circuit to ground • KS failure	Check KS for correct fitment, REFER to: Knock Sensor (KS) LH (303-14 Electronic Engine Controls, Removal and Installation). For KS tests, GO to Pinpoint Test P.
P0333	Left-hand knock sensor (KS) sensing circuit out of range (high voltage)	• Poor sensor contact with cylinder block • KS to ECM sensing circuit; high resistance, open circuit, short circuit to high voltage • KS failure	Check KS for correct fitment, REFER to Knock sensor (KS) in this section. For KS tests, GO to Pinpoint Test P.
P0335	Crankshaft position (CKP) sensor circuit malfunction	• CKP sensor disconnected • CKP sensor gap incorrect/foreign matter on sensor face • CKP sensor sensing circuit; open circuit, short circuit to ground, short circuit to high voltage • CKP sensor failure	For CKP sensor tests, GO to Pinpoint Test Q.

DTC	Description	Possible Source	Action
P0336	Crankshaft position (CKP) sensor range/performance	• CKP sensor reluctor; foreign matter/damaged teeth • CKP sensor sensing circuit; intermittent open circuit, short circuit to ground, short circuit to high voltage • CKP sensor failure	For CKP sensor tests, GO to Pinpoint Test Q.
P0340	Right-hand camshaft position (CMP) sensor circuit malfunction	• CMP sensor disconnected • CMP sensor gap incorrect/foreign matter on sensor face • CMP sensor sensing circuit; open circuit, short circuit to ground, short circuit to high voltage • CMP sensor failure	For CMP sensor tests, GO to Pinpoint Test R.
P0341	Right-hand camshaft position (CMP) sensor range/performance	• CMP sensor disconnected • CMP sensor gap incorrect/foreign matter on face • CMP sensor sensing circuit open circuit, short circuit to ground, short circuit to high voltage • CMP sensor failure	For CMP sensor tests, GO to Pinpoint Test R.
P0345*	Left-hand camshaft position (CMP) sensor circuit malfunction *P0345 for early production vehicles; P1340 for later production vehicles	• CMP sensor disconnected • CMP sensor gap incorrect/foreign matter on sensor face • CMP sensor sensing circuit; open circuit, short circuit to ground, short circuit to high voltage • CMP sensor failure	For CMP sensor tests, GO to Pinpoint Test AB.
P0346*	Left-hand camshaft position (CMP) sensor range/performance *P0346 for early production vehicles; P1341 for later production vehicles	• CMP sensor disconnected • CMP sensor gap incorrect/foreign matter on sensor face • CMP sensor sensing circuit open circuit, short circuit to ground, short circuit to high voltage • CMP sensor failure	For CMP sensor tests, GO to Pinpoint Test AB.
P0351	Ignition coil primary/secondary circuit malfunction, cyl 1	• ECM to ignition coil primary circuit; open circuit, short circuit to ground, high resistance • Ignition coil ground circuit; open circuit, high resistance • Ignition coil failure	For ignition system tests, REFER to: Engine Ignition (303-07 Engine Ignition, Diagnosis and Testing).
P0352	Ignition coil primary/secondary circuit malfunction, cyl 3		
P0353	Ignition coil primary/secondary circuit malfunction, cyl 5		
P0354	Ignition coil primary/secondary circuit malfunction, cyl 7		
P0355	Ignition coil primary/secondary circuit malfunction, cyl 2		
P0356	Ignition coil primary/secondary circuit malfunction, cyl 4		
P0357	Ignition coil primary/secondary circuit malfunction, cyl 6		
P0358	Ignition coil primary/secondary circuit malfunction, cyl 8		
P0400	Exhaust gas recirculation (EGR) flow malfunction	• EGR valve incorrectly fitted or loose • EGR pipe blocked • EGR valve stuck open/closed /blocked • EGR valve failure	Check EGR valve fitment, check condition of pipes, for EGR component tests, REFER to: Engine Emission Control (303-08 Engine Emission Control, Diagnosis and Testing).
P0405	Exhaust gas recirculation (EGR) valve drive circuits low voltage	• EGR valve power supply circuit open circuit • EGR valve to ECM drive circuit pair; (EGR valve pins 1/4; 6/3) open circuit, high resistance • EGR valve failure (stepper motor open circuit)	For EGR component tests, REFER to: Engine Emission Control (303-08 Engine Emission Control, Diagnosis and Testing).
P0406	Exhaust gas recirculation (EGR) valve drive circuits high voltage	• EGR valve to ECM drive circuit pair; (EGR valve pins 1/4; 6/3) short circuit to ground or high voltage • EGR valve failure (stepper motor short circuit)	For EGR component tests, REFER to: Engine Emission Control (303-08 Engine Emission Control, Diagnosis and Testing).
P0420	Right-hand catalytic converter efficiency below threshold. Note: Do not replace sensors for this DTC.	• Catalytic converter failure (melted, fractured) • Catalytic converter contaminated (sulphur)	Monitoring conditions • Start engine and bring to normal operating temperature • Allow to idle for 2 minutes

DTC	Description	Possible Source	Action
			• Rev engine to between 2500 and 2700 rpm for 5 minutes • Drive vehicle for at least 1 minute (general conditions) • Check for DTCs • Stop the engine Examine the catalytic converters for damage/contamination. Follow the DTC index for any other codes indicated.
P0430	Left-hand catalytic converter efficiency below threshold. Note: Do not replace sensors for this DTC.	• Catalytic converter failure (melted, fractured) • Catalytic converter contaminated (sulphur)	Monitoring conditions • Start engine and bring to normal operating temperature • Allow to idle for 2 minutes • Rev engine to between 2500 and 2700 rpm for 5 minutes • Drive vehicle for at least 1 minute (general conditions) • Check for DTCs • Stop the engine Examine the catalytic converters for damage/contamination. Follow the DTC index for any other codes indicated.
P0441	Evaporative emissions system (EVAP) incorrect purge flow	• EVAP canister purge pipe restricted, leaking, disconnected • EVAP canister vent restricted • EVAP canister purge valve to engine pipe(s) restricted, leaking, disconnected • EVAP canister purge valve failure	For EVAP system components, REFER to: Evaporative Emissions (303-13 Evaporative Emissions, Diagnosis and Testing).
P0442	Evaporative emissions system (EVAP) leak detected - small (0.040 in)	• Fuel cap seal defective • EVAP system leak (canister damage, pipework damage) • EVAP canister purge valve to ECM drive circuit; open circuit, short circuit, high resistance • EVAP canister purge valve power supply circuit; open circuit, short circuit • EVAP canister purge valve to engine purge pipe; restricted, leaking, disconnected • EVAP canister purge valve operating vacuum hose leak/restriction • EVAP canister purge valve failure • Fuel tank leak	For EVAP system components, REFER to: Evaporative Emissions (303-13 Evaporative Emissions, Diagnosis and Testing).
P0443	Evaporative emissions system (EVAP) canister purge valve circuit malfunction	• EVAP canister purge valve to ECM drive circuit; open circuit, short circuit, high resistance • EVAP canister purge valve power supply circuit; open circuit, short circuit • EVAP canister purge valve operating vacuum hose leak/restriction • EVAP canister purge valve failure	For EVAP system components, REFER to: Evaporative Emissions (303-13 Evaporative Emissions, Diagnosis and Testing).
P0444	Evaporative emissions system (EVAP) canister purge valve circuit open circuit	• EVAP canister purge valve disconnected • EVAP canister purge valve to ECM drive circuit; open circuit, high resistance • EVAP canister purge valve failure	For EVAP system components, REFER to: Evaporative Emissions (303-13 Evaporative Emissions, Diagnosis and Testing).
P0445	Evaporative emissions system (EVAP) canister purge valve circuit short circuit	• EVAP canister purge valve to ECM drive circuit; short circuit to ground • EVAP canister purge valve failure	For EVAP system components, REFER to: Evaporative Emissions (303-13 Evaporative Emissions, Diagnosis and Testing).
P0446	Evaporative emissions system (EVAP) canister close valve (CCV) malfunction	• CCV power supply circuit; open circuit, short circuit • CCV to ECM drive circuit; open circuit, high resistance, short circuit to B+ voltage • CCV failure	For EVAP system components, REFER to: Evaporative Emissions (303-13 Evaporative Emissions, Diagnosis and Testing).
P0447	Evaporative emissions system (EVAP) canister close valve (CCV) circuit open circuit	• CCV power supply circuit; open circuit, short circuit • CCV to ECM drive circuit open circuit, high resistance, short circuit to B+ voltage	For EVAP system components, REFER to: Evaporative Emissions (303-13 Evaporative Emissions, Diagnosis and Testing).

DTC	Description	Possible Source	Action
		• CCV failure	
P0448	Evaporative emissions system (EVAP) canister close valve (CCV) circuit short circuit	• CCV to ECM drive circuit; short circuit to ground • CCV failure	For EVAP system components, REFER to: Evaporative Emissions (303-13 Evaporative Emissions, Diagnosis and Testing).
P0450	Fuel tank pressure (FTP) sensor circuit malfunction	• FTP sensor disconnected • FTP sensor to ECM sensing circuit; open circuit, short circuit to ground, short circuit to B+ voltage • FTP sensor to splice sensor supply circuit; open circuit, high resistance • FTP sensor to splice ground circuit; open circuit, high resistance • FTP sensor failure	For EVAP system components, REFER to: Evaporative Emissions (303-13 Evaporative Emissions, Diagnosis and Testing).
P0452	Fuel tank pressure (FTP) sensor circuit low voltage (low pressure)	• FTP sensor disconnected • FTP sensor to ECM sensing circuit; open circuit, short circuit to ground • FTP sensor to splice sensor supply circuit; open circuit, high resistance • FTP sensor failure	For EVAP system components, REFER to: Evaporative Emissions (303-13 Evaporative Emissions, Diagnosis and Testing).
P0453	Fuel tank pressure (FTP) sensor circuit high voltage (high pressure)	• FTP sensor to splice sensor ground circuit; open circuit, high resistance • FTP sensor to ECM sensing circuit; short circuit to high voltage • FTP sensor failure	For EVAP system components, REFER to: Evaporative Emissions (303-13 Evaporative Emissions, Diagnosis and Testing).
P0455	EVAP system leak detected - large	• Fuel filler cap missing • Fuel filler cap seal defective • EVAP system leak (canister damage, pipework damage) • EVAP canister purge valve to ECM drive circuit; open circuit, short circuit, high resistance • EVAP canister purge valve power supply circuit; open circuit, short circuit • EVAP canister purge valve to engine purge pipe restricted, leaking, disconnected • EVAP canister purge valve operating vacuum hose leak/restriction • EVAP canister purge valve failure • Fuel tank leak	For EVAP system components, REFER to: Evaporative Emissions (303-13 Evaporative Emissions, Diagnosis and Testing).
P0456	EVAP system leak detected - very small (0.020)	• Fuel cap seal defective • EVAP system leak (canister damage, pipework damage) • EVAP purge valve to ECM drive circuit; open circuit, short circuit, high resistance • EVAP purge valve power supply circuit; open circuit, short circuit • EVAP purge valve to engine purge pipe; restricted/leaking • EVAP purge valve operating vacuum hose leak/blockage • EVAP purge valve failure • Fuel tank leak	For EVAP system components, REFER to: Evaporative Emissions (303-13 Evaporative Emissions, Diagnosis and Testing).
P0460	Fuel level sensor circuit range/performance	• Fuel level sensor to instrument cluster circuits intermittent short or open circuit, high resistance • Fuel level sensor failure • Instrument cluster fault (incorrect fuel level data)	For fuel level sensor tests, REFER to: Fuel Charging and Controls (303-04 Fuel Charging and Controls, Diagnosis and Testing).
P0480	Radiator cooling fan module drive circuit malfunction	• ECM to radiator cooling fan module drive circuit; short circuit, open circuit, high resistance • Radiator cooling fan fault • Radiator cooling fan module fault	For radiator cooling fan module tests, GO to Pinpoint Test S.

DTC	Description	Possible Source	Action
P0506	Idle RPM lower than expected	• Air intake restriction • Accessory drive overload (defective/siezed component) • Throttle valve stuck closed • Throttle body failure	Check air intake system for restriction, REFER to: Intake Air Distribution and Filtering (303-12 Intake Air Distribution and Filtering, Diagnosis and Testing). Check accessory drive components, REFER to: Accessory Drive (303-05 Accessory Drive, Diagnosis and Testing). Check throttle body operation, REFER to: Fuel Charging and Controls (303-04 Fuel Charging and Controls, Diagnosis and Testing).
P0507	Idle RPM higher than expected	• Air intake leak between MAF sensor and throttle • Air intake leak between throttle and engine • Engine breather leak • Cruise control vacuum failure • Throttle valve stuck open • Throttle assembly failure	Inspect air intake system. REFER to: Intake Air Distribution and Filtering (303-12 Intake Air Distribution and Filtering, Diagnosis and Testing). For breather system, REFER to: Engine Emission Control (303-08 Engine Emission Control, Diagnosis and Testing). For cruise control, REFER to: Speed Control (310-03 Speed Control, Diagnosis and Testing). For throttle body, REFER to: Fuel Charging and Controls (303-04 Fuel Charging and Controls, Diagnosis and Testing).
P0532	Air conditioning pressure sensor circuit low voltage (high pressure)	• Air conditioning pressure sensor disconnected • Air conditioning pressure sensor to ECM sensing circuit; open circuit, short circuit to ground • Air conditioning pressure sensor to splice sensor supply circuit; open circuit, high resistance • Air conditioning pressure sensor failure	For A/C pressure sensor tests, GO to Pinpoint Test AJ. For sensor supply circuit tests, GO to Pinpoint Test Y. For air conditioning system information, REFER to: Air Conditioning (412-03 Air Conditioning, Diagnosis and Testing).
P0533	Air conditioning pressure sensor circuit high voltage (low pressure)	• Air conditioning pressure sensor to splice sensor ground circuit; open circuit, high resistance • Air conditioning pressure sensor to ECM sensing circuit; short circuit to high voltage • Air conditioning pressure sensor failure	For A/C pressure sensor tests, GO to Pinpoint Test AJ. For sensor ground circuit tests, GO to Pinpoint Test Z. For air conditioning system information, REFER to: Air Conditioning (412-03 Air Conditioning, Diagnosis and Testing).
P0560	Battery power supply voltage malfunction	• ECM battery power supply open circuit, high resistance	For ECM power supply tests, GO to Pinpoint Test T.
P0566	Speed control CANCEL switch ON fault	• Speed control switches internal steering wheel circuit; short circuit to ground • Steering wheel cassette reel; short circuit to ground • Cassette reel to ECM circuit; short circuit to ground • CANCEL switch failure (stuck ON)	For speed control tests, REFER to: Speed Control (310-03 Speed Control, Diagnosis and Testing).
P0567	Speed control RESUME switch ON fault	• Speed control switches internal steering wheel circuit; short circuit to ground • Steering wheel cassette reel; short circuit to ground • Cassette reel to ECM circuit; short circuit to ground • RESUME switch failure (stuck ON)	For speed control tests, REFER to: Speed Control (310-03 Speed Control, Diagnosis and Testing).
P0568	Speed control input signal low/high resistance	• Speed control switches internal steering wheel circuit; open circuit, high resistance • Steering wheel cassette reel; open circuit, high resistance • Cassette reel to ECM circuit; open circuit, high resistance	For speed control tests, REFER to: Speed Control (310-03 Speed Control, Diagnosis and Testing).
P0569	Speed control SET/- switch ON fault	• Speed control switches internal steering wheel circuit; short circuit to ground • Steering wheel cassette reel; short circuit to ground • Cassette reel to ECM circuit; short circuit to ground • SET/- switch failure	For speed control tests, REFER to: Speed Control (310-03 Speed Control, Diagnosis and Testing).
P0570	Speed control SET/+ switch ON fault	• Speed control switches internal steering wheel circuit; short circuit to ground • Steering wheel cassette reel; short circuit to ground	For speed control tests, REFER to: Speed Control (310-03 Speed Control, Diagnosis and Testing).

DTC	Description	Possible Source	Action
		• Cassette reel to ECM circuit; short circuit to ground • SET/+ switch failure (stuck ON)	
P0603	Engine control module (ECM) Keep alive memory error	• ECM failure	Contact dealer technical support for advice on possible ECM failure
P0605	Transmission control module (TCM) self-test error	• TCM/control valve failure	For transmission tests, REFER to: Diagnostic Strategy (307-01 Automatic Transmission/Transaxle, Diagnosis and Testing).
P0606	Transmission control module (TCM) "watch-dog" circuit malfunction	• TCM/control valve failure	For transmission tests, REFER to: Diagnostic Strategy (307-01 Automatic Transmission/Transaxle, Diagnosis and Testing).
P0610	Transmission control module (TCM) configuration error	• Reconfigure TCM	For transmission tests, REFER to: Diagnostic Strategy (307-01 Automatic Transmission/Transaxle, Diagnosis and Testing).
P0617	Starter relay drive circuit high voltage/starter relay request on (ignition switch position III, START)	• Starter relay drive circuit; short circuit to high voltage • Starter relay failure	For starter system tests, REFER to: Starting System (303-06 Starting System, Diagnosis and Testing).
P0641	Sensor supply voltage circuit malfunction	• TCM/control valve failure	For transmission tests, REFER to: Diagnostic Strategy (307-01 Automatic Transmission/Transaxle, Diagnosis and Testing).
P0646	Air conditioning (A/C) compressor clutch relay drive circuit low voltage (CAN A/C compressor clutch request OFF)	• A/C compressor clutch relay drive circuit; open circuit, high resistance • A/C compressor clutch relay failure	For A/C pressure sensor tests, GO to Pinpoint Test AJ.
P0647	Air conditioning (A/C) compressor clutch relay drive circuit high voltage (CAN A/C compressor clutch request ON)	• A/C compressor clutch relay drive circuit; short circuit to high voltage • A/C compressor clutch relay failure	For A/C pressure sensor tests, GO to Pinpoint Test AJ.
P0651	Pressure regulator and shift solenoid supply circuit malfunction	• TCM/control valve failure	For transmission tests, REFER to: Diagnostic Strategy (307-01 Automatic Transmission/Transaxle, Diagnosis and Testing).
P0666	Substrate temperature sensor circuit malfunction	• TCM/control valve failure	For transmission tests, REFER to: Diagnostic Strategy (307-01 Automatic Transmission/Transaxle, Diagnosis and Testing).
P0701	TCM control errors	• TCM/control valve failure	For transmission tests, REFER to: Diagnostic Strategy (307-01 Automatic Transmission/Transaxle, Diagnosis and Testing).
P0702	TCM battery power supply low voltage (short time)	• Battery power supply fuse failure • Battery power supply; intermittent open circuit	For transmission tests, REFER to: Diagnostic Strategy (307-01 Automatic Transmission/Transaxle, Diagnosis and Testing).
P0705	Gear position switch circuit malfunction	• TCM/control valve failure	For transmission tests, REFER to: Diagnostic Strategy (307-01 Automatic Transmission/Transaxle, Diagnosis and Testing).
P0706	Gear selector position plausibility fault	• TCM/linear switch module CAN fault • Linear switch module failure • TCM/control valve failure	For CAN tests, REFER to: Communications Network (418-00 Module Communications Network, Diagnosis and Testing). For linear switch tests, REFER to: External Controls (307-05 Automatic Transmission/Transaxle External Controls, Diagnosis and Testing). For transmission tests, REFER to: Diagnostic Strategy (307-01 Automatic Transmission/Transaxle, Diagnosis and Testing).
P0709	Gear selector intermediate position fault	• Linear switch module failure	For linear switch tests, REFER to: External Controls (307-05 Automatic Transmission/Transaxle External Controls, Diagnosis and Testing).
P0710	Transmission fluid temperature sensor circuit malfunction	• TCM/control valve failure	For transmission tests, REFER to: Diagnostic Strategy (307-01 Automatic Transmission/Transaxle, Diagnosis and Testing).
P0711	Transmission fluid temperature range fault	• TCM/ECM CAN fault • TCM/control valve failure	For CAN tests, REFER to: Communications Network (418-00 Module Communications Network, Diagnosis and Testing). For transmission tests, REFER to: Diagnostic Strategy (307-01 Automatic Transmission/Transaxle, Diagnosis and Testing).
P0715	Turbine speed sensor circuit failure	• TCM/control valve failure	For transmission tests, REFER to: Diagnostic Strategy (307-01 Automatic Transmission/Transaxle, Diagnosis and Testing).
P0720	Output speed sensor circuit failure	• TCM/control valve failure	For transmission tests, REFER to: Diagnostic Strategy (307-01 Automatic Transmission/Transaxle, Diagnosis and Testing).
P0721	Output speed sensor signal gradient fault	• Transmission mechanical failure • TCM/control valve failure	For transmission tests, REFER to: Diagnostic Strategy (307-01 Automatic Transmission/Transaxle, Diagnosis and Testing).
P0725	Engine over-speed range fault	• TCM/ECM CAN fault	For CAN tests, REFER to: Communications Network (418-00 Module Communications Network, Diagnosis and Testing).

DTC	Description	Possible Source	Action
P0729	Sixth gear ratio fault	• Transmission mechanical failure	For transmission tests, REFER to: Diagnostic Strategy (307-01 Automatic Transmission/Transaxle, Diagnosis and Testing).
P0730	Gear ratio fault	• Transmission mechanical failure	For transmission tests, REFER to: Diagnostic Strategy (307-01 Automatic Transmission/Transaxle, Diagnosis and Testing).
P0731	First gear ratio fault	• Transmission mechanical failure	For transmission tests, REFER to: Diagnostic Strategy (307-01 Automatic Transmission/Transaxle, Diagnosis and Testing).
P0732	Second gear ratio fault	• Transmission mechanical failure	For transmission tests, REFER to: Diagnostic Strategy (307-01 Automatic Transmission/Transaxle, Diagnosis and Testing).
P0733	Third gear ratio fault	• Transmission mechanical failure	For transmission tests, REFER to: Diagnostic Strategy (307-01 Automatic Transmission/Transaxle, Diagnosis and Testing).
P0734	Fourth gear ratio fault	• Transmission mechanical failure • TCM/control valve failure	For transmission tests, REFER to: Diagnostic Strategy (307-01 Automatic Transmission/Transaxle, Diagnosis and Testing).
P0735	Fifth gear ratio fault	• Transmission mechanical failure • TCM/control valve failure	For transmission tests, REFER to: Diagnostic Strategy (307-01 Automatic Transmission/Transaxle, Diagnosis and Testing).
P0736	Reverse gear ratio fault	• Transmission mechanical failure	For transmission tests, REFER to: Diagnostic Strategy (307-01 Automatic Transmission/Transaxle, Diagnosis and Testing).
P0740	Torque converter clutch pressure regulator solenoid circuit malfunction	• TCM/control valve failure	For transmission tests, REFER to: Diagnostic Strategy (307-01 Automatic Transmission/Transaxle, Diagnosis and Testing).
P0741	Torque converter clutch pressure regulator solenoid stuck open	• TCM/control valve failure • Transmission mechanical failure	For transmission tests, REFER to: Diagnostic Strategy (307-01 Automatic Transmission/Transaxle, Diagnosis and Testing).
P0743	Torque converter clutch pressure regulator solenoid circuit plausibility error	• TCM/control valve failure	For transmission tests, REFER to: Diagnostic Strategy (307-01 Automatic Transmission/Transaxle, Diagnosis and Testing).
P0750	Pressure regulator solenoid 1 circuit malfunction	• TCM/control valve failure	For transmission tests, REFER to: Diagnostic Strategy (307-01 Automatic Transmission/Transaxle, Diagnosis and Testing).
P0753	Pressure regulator solenoid 1 circuit plausibility error	• TCM/control valve failure	For transmission tests, REFER to: Diagnostic Strategy (307-01 Automatic Transmission/Transaxle, Diagnosis and Testing).
P0755	Pressure regulator solenoid 2 circuit malfunction	• TCM/control valve failure	For transmission tests, REFER to: Diagnostic Strategy (307-01 Automatic Transmission/Transaxle, Diagnosis and Testing).
P0758	Pressure regulator solenoid 2 circuit plausibility error	• TCM/control valve failure	For transmission tests, REFER to: Diagnostic Strategy (307-01 Automatic Transmission/Transaxle, Diagnosis and Testing).
P0760	Pressure regulator solenoid 3 circuit malfunction	• TCM/control valve failure	For transmission tests, REFER to: Diagnostic Strategy (307-01 Automatic Transmission/Transaxle, Diagnosis and Testing).
P0763	Pressure regulator solenoid 3 circuit plausibility error	• TCM/control valve failure	For transmission tests, REFER to: Diagnostic Strategy (307-01 Automatic Transmission/Transaxle, Diagnosis and Testing).
P0765	Pressure regulator solenoid 4 circuit malfunction	• TCM/control valve failure	For transmission tests, REFER to: Diagnostic Strategy (307-01 Automatic Transmission/Transaxle, Diagnosis and Testing).
P0768	Pressure regulator solenoid 4 circuit plausibility error	• TCM/control valve failure	For transmission tests, REFER to: Diagnostic Strategy (307-01 Automatic Transmission/Transaxle, Diagnosis and Testing).
P0770	Pressure regulator solenoid 5 circuit malfunction	• TCM/control valve failure	For transmission tests, REFER to: Diagnostic Strategy (307-01 Automatic Transmission/Transaxle, Diagnosis and Testing).
P0773	Pressure regulator solenoid 5 circuit plausibility error	• TCM/control valve failure	For transmission tests, REFER to: Diagnostic Strategy (307-01 Automatic Transmission/Transaxle, Diagnosis and Testing).
P0780	Gear load fault	• Transmission mechanical failure	For transmission tests, REFER to: Diagnostic Strategy (307-01 Automatic Transmission/Transaxle, Diagnosis and Testing).
P0781	1-2/2-1 Gear load fault	• Transmission mechanical failure	For transmission tests, REFER to: Diagnostic Strategy (307-01 Automatic Transmission/Transaxle, Diagnosis and Testing).
P0782	2-3/3-2 Gear load fault	• Transmission mechanical failure	For transmission tests, REFER to: Diagnostic Strategy (307-01 Automatic Transmission/Transaxle, Diagnosis and Testing).
P0783	3-4/4-3 Gear load fault	• Transmission mechanical failure	For transmission tests, REFER to: Diagnostic Strategy (307-01 Automatic Transmission/Transaxle, Diagnosis and Testing).
P0784	4-5/5-4 Gear load fault	• Transmission mechanical failure	For transmission tests, REFER to: Diagnostic Strategy (307-01 Automatic Transmission/Transaxle, Diagnosis and Testing).
P0787	Shift solenoid circuit malfunction	• TCM/control valve failure	For transmission tests, REFER to: Diagnostic Strategy (307-01 Automatic Transmission/Transaxle, Diagnosis and Testing).
P0788	Shift solenoid circuit plausibility error	• TCM/control valve failure	For transmission tests, REFER to: Diagnostic Strategy (307-01 Automatic Transmission/Transaxle, Diagnosis and Testing).

DTC	Description	Possible Source	Action
P0825	Gear positions R, D plausibility error	• Linear switch incorrectly adjusted • Linear switch module failure	For linear switch module adjustment/replacement, REFER to: External Controls (307-05 Automatic Transmission/Transaxle External Controls, Diagnosis and Testing).
P0829	5-6 Gear load fault	• Transmission mechanical failure	For transmission tests, REFER to: Diagnostic Strategy (307-01 Automatic Transmission/Transaxle, Diagnosis and Testing).
P0860	Linear switch module CAN network malfunction. (Linear switch module/CAN monitored by the ECM)	• CAN open circuit fault • CAN short circuit fault • Linear switch module failure	For CAN tests, REFER to: Communications Network (418-00 Module Communications Network, Diagnosis and Testing). For linear switch module, REFER to: External Controls (307-05 Automatic Transmission/Transaxle External Controls, Diagnosis and Testing).
P1000	System checks not complete since last memory clear	OBD monitors have not completed	Carry out comprehensive component monitor drive cycle. Refer to the DTC section of JTIS, accessed by the icon on the opening page.
P1104	Mass air flow (MAF) sensor ground malfunction	• MAF sensor to ECM sensor ground circuit; open circuit, short circuit to high voltage, high resistance • MAF sensor to ECM sensing circuit open circuit • MAF sensor failure	For MAF ground tests, GO to Pinpoint Test U.
P1107	Manifold absolute pressure (MAP) sensor sensing circuit low voltage	• MAP sensor to ECM sensing circuit; open circuit or short circuit to ground • MAP sensor supply circuit (to splice) open circuit • MAP sensor failure	For MAP sensor tests, GO to Pinpoint Test AG.
P1108	Manifold absolute pressure (MAP)sensor sensing circuit high voltage	• MAP sensor ground circuit (to splice) open circuit • MAP sensor to ECM sensing circuit; short circuit to high voltage • MAP sensor failure	For MAP sensor tests, GO to Pinpoint Test AG.
P1111	System checks complete since last memory clear	OBD monitors have completed	No action necessary
P1122	Accelerator pedal position (APP) sensor circuit low voltage - APP1	• APP sensor to ECM sensing circuit "1"; open circuit, short circuit to ground or high resistance • APP sensor power supply circuit; open circuit, high resistance • APP sensor failure	For APP 1 sensor tests, GO to Pinpoint Test V.
P1123	Accelerator pedal position (APP) sensor circuit high voltage - APP1. Note; This DTC could be flagged by both sensor element circuits having faults	• APP sensor to ECM sensing circuit(s) short circuit to high voltage • APP sensor ground circuit(s) open circuit • APP sensor failure	For APP 1 sensor tests, GO to Pinpoint Test V.
P1215	Accelerator pedal position (APP) sensor sensing circuit low voltage - APP2	• APP sensor to ECM sensing circuit (APP2); open circuit, short circuit to ground, high resistance • APP sensor supply circuit (to splice) open circuit, high resistance • APP sensor failure	For APP 2 sensor tests, GO to Pinpoint Test W.
P1216	Accelerator pedal position (APP) sensor sensing circuit high voltage - APP2. Note; This DTC could be flagged by both sensor element circuits having faults	• APP sensor to ECM sensing circuit(s) short circuit to high voltage • APP sensor ground circuit(s) (to splice) open circuit • APP sensor failure	For APP 2 sensor tests, GO to Pinpoint Test W.
P1224	Throttle control position error	• Throttle motor failure • Throttle body failure	For throttle body, REFER to: Fuel Charging and Controls (303-04 Fuel Charging and Controls, Diagnosis and Testing).
P1229	Throttle motor control circuit malfunction	• Throttle motor disconnected • Throttle motor to ECM drive circuits; short circuit or open circuit • ECM ground circuit fault(s) (EM80-04, 05, 54) • Throttle motor failure • Throttle body failure	FOr throttle motor to ECM circuit tests, GO to Pinpoint Test X. For throttle body, motor relay tests, REFER to: Fuel Charging and Controls (303-04 Fuel Charging and Controls, Diagnosis and Testing).
P1234	No fuel pump commands received by ECM	• ECM to fuel pump module drive circuit; open circuit, short circuit • Fuel pump module failure	For fuel pump module tests, REFER to: Fuel Charging and Controls (303-04 Fuel Charging and Controls, Diagnosis and Testing).

DTC	Description	Possible Source	Action
P1236	Fuel pump not activated when requested by ECM	• ECM to fuel pump module drive circuit; open circuit, short circuit, high resistance • Fuel pump module failure	For fuel pump module tests, REFER to: Fuel Charging and Controls (303-04 Fuel Charging and Controls, Diagnosis and Testing).
P1240	Sensor power supply circuit malfunction	• ECM to sensors supply voltage circuit(s); short circuit to ground, short circuit to high voltage, open circuit, high resistance	For sensor supply tests, GO to Pinpoint Test Y.
P1241	Sensor power supply circuit low voltage	• ECM to sensors supply voltage circuit(s); short circuit to ground	For sensor supply tests, GO to Pinpoint Test Y.
P1242	Sensor power supply circuit high voltage	• ECM to sensors supply voltage circuit(s); open circuit, high resistance, short circuit to high voltage	For sensor supply tests, GO to Pinpoint Test Y.
P1243	Sensor ground circuits open circuit	• ECM to sensors ground circuit; open circuit, high resistance	For sensor ground tests, GO to Pinpoint Test Z.
P1245	Engine crank signal low voltage	• Body processor module (BPM) to ECM circuit; open circuit • Ignition switch to BPM circuit failure	For crank signal tests, GO to Pinpoint Test AA.
P1246	Engine crank signal high voltage	• Body processor module (BPM) to ECM circuit; short circuit to high voltage • Ignition switch to BPM circuit failure	For crank signal tests, GO to Pinpoint Test AA.
P1250	Throttle valve return spring malfunction	• Throttle return spring failure (throttle body failure)	INSTALL a new throttle body. REFER to: Fuel Charging and Controls (303-04 Fuel Charging and Controls, Diagnosis and Testing).
P1251	Throttle motor relay OFF failure	• Throttle motor relay coil power supply circuit; open circuit • Throttle motor relay failure • Throttle motor relay coil to ECM circuit; open circuit • ECM ground circuit fault (relay coil drive)	For throttle motor relay tests, REFER to: Fuel Charging and Controls (303-04 Fuel Charging and Controls, Diagnosis and Testing).
P1254	Throttle "limp-home" spring malfunction	• Throttle limp-home spring failure (throttle failure)	INSTALL a new throttle body REFER to: Throttle Body (303-04 Fuel Charging and Controls, Removal and Installation).
P1260	Security input malfunction. Note; This DTC can only be cleared following rectification after an ignition OFF/ON cycle	• Invalid ignition key code • Key transponder module (KTM) signal to BPM missing or corrupted • BPM security signal to ECM missing or corrupted •	Contact dealer technical support for information on security system.
P1313	Misfire rate catalyst damage, Right-Hand (Note; This DTC will flag only when accompanied by a random or individual cylinder misfire DTC; P0300, P0301 to P0308)	Refer to P0300 possible sources	Refer to P0300 Actions
P1314	Misfire rate catalyst damage, Left-Hand (Note; This DTC will flag only when accompanied by a random or individual cylinder misfire DTC; P0300 to P0308)		
P1316	Misfire excess emission (Note; This DTC will flag only when accompanied by an individual cylinder misfire DTC; P0300 to P0308)		
P1338	Fuel pump drive circuit low/high voltage	• Fuel pump module to fuel pump drive circuit; open circuit, short circuit, high resistance • Fuel pump module failure • Fuel pump failure	For fuel pump module tests, REFER to: Fuel Charging and Controls (303-04 Fuel Charging and Controls, Diagnosis and Testing).
P1340* (P0345 for early production vehicles)	Left-Hand camshaft position sensor (CMP) sensor circuit malfunction	• CMP sensor disconnected • CMP sensor gap incorrect/foreign matter on sensor face • CMP sensor sensing circuit; open circuit, short circuit to ground, short circuit to high voltage • CMP sensor failure	For CMP sensor tests, GO to Pinpoint Test AB.

DTC	Description	Possible Source	Action
P1341* (P0346 for early production vehicles)	Left-Hand camshaft position (CMP) sensor range/performance	• CMP sensor disconnected • CMP sensor gap incorrect/foreign matter on sensor face • CMP sensor sensing circuit open circuit, short circuit to ground, short circuit to high voltage • CMP sensor failure	For CMP sensor tests, GO to Pinpoint Test AB.
P1344	Accelerator pedal position (APP) sensor sensing circuits range/performance	• APP sensor to ECM sensing circuits; short circuit, open circuit, high resistance • APP sensor supply circuits; short circuit, open circuit, high resistance • APP sensor ground circuits; open circuit • APP sensor failure	For APP sensor sensing circuit tests, GO to Pinpoint Test V. and GO to Pinpoint Test W. For sensor ground tests, GO to Pinpoint Test Z. For sensor supply tests, GO to Pinpoint Test Y.
P1367	Right-Hand cylinders ignition monitor fault	• Ignition monitoring circuit between splice and ECM; open circuit, short circuit to ground or short circuit to B+ voltage • Ignition coil ground circuit fault	For ignition system, REFER to: Engine Ignition (303-07 Engine Ignition, Diagnosis and Testing).
P1368	Left-Hand cylinders ignition monitor fault	• Ignition monitoring circuit between splice and ECM; open circuit, short circuit to ground or short circuit to B+ voltage • Ignition coil ground circuit fault	For ignition system, REFER to: Engine Ignition (303-07 Engine Ignition, Diagnosis and Testing).
P1384	Right-Hand variable camshaft timing (VCT) oil control solenoid malfunction	• VCT solenoid to ECM PWM drive circuit fault • VCT solenoid ground circuit fault • VCT solenoid failure • Oil contamination • VCT oil flow fault • VCT/camshaft mechanical failure	Check oil condition; For VCT solenoid tests, GO to Pinpoint Test AC. For engine information, REFER to: Engine (303-01 Engine, Diagnosis and Testing).
P1396	Left-Hand variable camshaft timing (VCT) oil control solenoid malfunction	• VCT solenoid to ECM PWM drive circuit fault • VCT solenoid ground circuit fault • VCT solenoid failure • Oil contamination • VCT oil flow fault • VCT/camshaft mechanical failure	Check oil condition; For VCT solenoid tests, GO to Pinpoint Test AD. For engine information, REFER to: Engine (303-01 Engine, Diagnosis and Testing).
P1410	Air cleaner solenoid valve drive circuit malfunction	• ECM to air cleaner solenoid circuit; open circuit, short circuit, high resistance • Air cleaner solenoid failure	For air cleaner solenoid valve tests, GO to Pinpoint Test AK.
P1474	Intercooler coolant pump malfunction	• Intercooler coolant pump failure	For intercooler coolant pump tests, GO to Pinpoint Test AL.
P1516	Gear change PARK/NEUTRAL driving malfunction	• ECM P/N circuit; short circuit to ground, short circuit to high voltage, high resistance • Gear selector cable adjustment incorrect • Linear switch module adjustment incorrect • Linear switch module/ECM CAN fault	For P/N circuit tests and gear selector cable/linear switch module adjustment, REFER to: External Controls (307-05 Automatic Transmission/Transaxle External Controls, Diagnosis and Testing). For CAN tests, REFER to: Communications Network (418-00 Module Communications Network, Diagnosis and Testing).
P1517	Gear change PARK/NEUTRAL starting malfunction	• ECM P/N circuit; short circuit to ground, short circuit to high voltage, high resistance • Gear selector cable adjustment incorrect • Linear switch module adjustment incorrect • Linear switch module/ECM CAN fault	For P/N circuit tests and gear selector cable/linear switch module adjustment, REFER to: External Controls (307-05 Automatic Transmission/Transaxle External Controls, Diagnosis and Testing). For CAN tests, REFER to: Communications Network (418-00 Module Communications Network, Diagnosis and Testing).
P1571	Brake ON/OFF switch; brake cancel switch malfunction. (Note; Brake ON/OFF switch - normally open ; brake cancel switch - normally closed)	• Brake ON/OFF switch to stop lamp relay circuit; open circuit • Stop lamp relay to ECM circuit; open circuit, short circuit to ground, high resistance • Brake ON/OFF switch ignition switched ground circuit; open circuit • Brake ON/OFF switch failure • Brake cancel switch to ECM	For cruise control system, REFER to: Speed Control (310-03 Speed Control, Diagnosis and Testing).

DTC	Description	Possible Source	Action
		circuit; open circuit, short circuit to ground, high resistance • Brake cancel switch power supply circuit; open circuit • Brake cancel switch failure	
P1582	"Flight recorder" data is stored if any one of five conditions occur • Inertia switch activated • Throttle limp-Home mode activated • Engine starts and stumbles • Engine fails to start • Engine stall	If none of the five conditions occur, check; • Inertia switch to ECM circuit; short circuit to B+ voltage • Inertia switch failure	Check the five conditions, for inertia switch circuit tests, GO to Pinpoint Test AE.
P1603	TCM internal communications error	• TCM/control valve failure	For transmission tests, REFER to: Diagnostic Strategy (307-01 Automatic Transmission/Transaxle, Diagnosis and Testing).
P1605	TCM RAM error	• Battery power supply circuit; open circuit, short circuit to ground • TCM/control valve failure	For transmission tests, REFER to: Diagnostic Strategy (307-01 Automatic Transmission/Transaxle, Diagnosis and Testing).
P1606	Engine management system (EMS) control relay malfunction	• ECM control relay failure • ECM control relay to ECM circuit fault • ECM control relay coil power supply open circuit • ECM ground circuit fault (relay coil drive)	For EMS control relay tests, GO to Pinpoint Test AF.
P1609	ECM microprocessor-to-microprocessor communication failure	• ECM failure	Contact Dealer technical support for advice on possible ECM failure
P1611	ECM sub CPU failure	• ECM failure	Contact Dealer technical support for advice on possible ECM failure
P1631	Throttle motor relay coil drive circuit OFF failure	• Throttle motor relay coil power supply circuit; open circuit • Throttle motor relay failure • Throttle motor relay coil to ECM drive circuit open circuit, short circuit to ground	For throttle motor relay tests, REFER to: Fuel Charging and Controls (303-04 Fuel Charging and Controls, Diagnosis and Testing).
P1632	Generator charge system failure/generator "LOAD" feedback circuit failure	• ECM to generator "LOAD" feedback circuit; short circuit, open circuit, high resistance • Generator regulator failure • Generator failure	For charging system tests, REFER to: Generator (414-02 Generator and Regulator, Diagnosis and Testing).
P1633	ECM main CPU failure	• ECM failure	Contact dealer technical support for advice on possible ECM failure
P1634	Throttle "watchdog" circuit malfunction	• ECM failure	Contact dealer technical support for advice on possible ECM failure
P1637	CAN ECM to DSCCM network malfunction	• CAN open circuit fault - DSCCM to ECM • CAN short circuit fault • DSCCM failure • ECM failure	For CAN tests, REFER to: Communications Network (418-00 Module Communications Network, Diagnosis and Testing). Contact dealer technical support for advice on possible ECM failure
P1638	CAN ECM/IC network malfunction	• CAN open circuit fault - IC to ECM • CAN short circuit fault • IC failure • ECM failure	For CAN tests, REFER to: Communications Network (418-00 Module Communications Network, Diagnosis and Testing). Contact dealer technical support for advice on possible ECM failure
P1642	CAN circuit malfunction	• CAN short circuit fault • Control module failure - check for additional logged DTCs to locate control module source	For CAN tests, REFER to: Communications Network (418-00 Module Communications Network, Diagnosis and Testing).
P1643	CAN ECM/TCM network malfunction	• CAN open circuit fault - TCM to ECM • CAN short circuit fault • TCM failure • ECM failure	For CAN tests, REFER to: Communications Network (418-00 Module Communications Network, Diagnosis and Testing). For transmission tests, REFER to: Diagnostic Strategy (307-01 Automatic Transmission/Transaxle, Diagnosis and Testing). Contact dealer technical support for advice on possible ECM failure
P1646	Right-Hand ECM HO2S control malfunction	• HO2S heater failure • HO2S sensing circuit; short circuit to ground, short circuit to high voltage, open circuit, high resistance • ECM failure	For HO2S tests, GO to Pinpoint Test F. and GO to Pinpoint Test G. Contact dealer technical support for advice on possible ECM failure
P1647	Left-Hand ECM HO2S control malfunction	• HO2S heater failure • HO2S sensing circuit; short circuit to ground, short circuit to high voltage, open circuit,	For HO2S tests, GO to Pinpoint Test J. and GO to Pinpoint Test K. Contact dealer technical support for advice on possible ECM failure

DTC	Description	Possible Source	Action
		high resistance • ECM failure	
P1648	ECM internal KS CPU self-test failure	• ECM failure	Contact dealer technical support for advice on possible ECM failure
P1656	TP sensor amplifier circuit malfunction	• ECM failure	Contact dealer technical support for advice on possible ECM failure
P1657	Throttle motor relay coil drive circuit ON failure	• Throttle motor relay failure • Throttle motor relay coil to ECM drive circuit; short circuit to B+ voltage	For throttle motor relay tests, REFER to: Fuel Charging and Controls (303-04 Fuel Charging and Controls, Diagnosis and Testing).
P1658	Throttle motor relay ON failure	• Throttle motor relay failure • Throttle motor relay coil to ECM drive circuit; short circuit to B+ voltage	For throttle motor relay tests, REFER to: Fuel Charging and Controls (303-04 Fuel Charging and Controls, Diagnosis and Testing).
P1696	CAN ECM/ASCCM network malfunction	• CAN open circuit fault - ASCCM to ECM • CAN short circuit fault • ASCCM failure • ECM failure	For CAN tests, REFER to: Communications Network (418-00 Module Communications Network, Diagnosis and Testing). Contact dealer technical support for advice on possible ECM failure
P1697	Adaptive speed control HEADWAY switch(es) circuit malfunction	• Speed control switches internal steering wheel circuit; short circuit to ground • Steering wheel cassette reel; short circuit to ground • Cassette reel to ECM circuit; short circuit to ground • HEADWAY +/ - switch(es) failure (stuck ON)	For speed control system, REFER to: Speed Control (310-03 Speed Control, Diagnosis and Testing).
P1699	CAN ECM/A/CCM network malfunction	• CAN open circuit fault - A/CCM to ECM • CAN short circuit fault • A/CCM failure • ECM failure	For CAN tests, REFER to: Communications Network (418-00 Module Communications Network, Diagnosis and Testing). Contact dealer technical support for advice on possible ECM failure
P1749	PARK/NEUTRAL circuit malfunction	• TCM to ECM P/N circuit; open circuit, short circuit to ground, short circuit to B+ voltage • TCM/control valve failure	For P/N tests, REFER to: External Controls (307-05 Automatic Transmission/Transaxle External Controls, Diagnosis and Testing). For transmission tests, REFER to: Diagnostic Strategy (307-01 Automatic Transmission/Transaxle, Diagnosis and Testing).
P1774	CAN TCM/linear switch module network malfunction	• CAN open circuit fault - TCM to linear switch module • CAN short circuit fault • Linear switch module failure	For CAN tests, REFER to: Communications Network (418-00 Module Communications Network, Diagnosis and Testing). For linear switch module, REFER to: External Controls (307-05 Automatic Transmission/Transaxle External Controls, Diagnosis and Testing).
P1783	Transmission over-temperature shut-down	• Transmission fluid level low • Transmission fluid cooler circuit; obstructed/leaking • Transmission fluid cooler fins blocked by debris • Transmission mechanical failure	For transmission information, REFER to: Diagnostic Strategy (307-01 Automatic Transmission/Transaxle, Diagnosis and Testing).
P1794	TCM ignition switched power supply circuit malfunction	• Ignition switched power supply fuse failure • \ignition switched power supply circuit; short circuit to ground, open circuit	For transmission tests, REFER to: Diagnostic Strategy (307-01 Automatic Transmission/Transaxle, Diagnosis and Testing).
P1796	CAN network fault	• CAN open circuit or short circuit fault • TCM/control valve failure	For CAN tests, REFER to: Communications Network (418-00 Module Communications Network, Diagnosis and Testing). For transmission tests, REFER to: Diagnostic Strategy (307-01 Automatic Transmission/Transaxle, Diagnosis and Testing).
P1797	CAN TCM/ECM network malfunction	• CAN open circuit fault - TCM to ECM • CAN short circuit fault • ECM failure • TCM/control valve failure	For CAN tests, REFER to: Communications Network (418-00 Module Communications Network, Diagnosis and Testing). For transmission tests, REFER to: Diagnostic Strategy (307-01 Automatic Transmission/Transaxle, Diagnosis and Testing). Contact dealer technical support for advice on possible ECM failure
P1798	CAN TCM/IC network malfunction	• CAN open circuit fault - TCM to IC • CAN short circuit fault • IC failure • TCM/control valve failure	For CAN tests, REFER to: Communications Network (418-00 Module Communications Network, Diagnosis and Testing). For transmission tests, REFER to: Diagnostic Strategy (307-01 Automatic Transmission/Transaxle, Diagnosis and Testing). Contact dealer technical support for advice on possible ECM failure

DTC	Description	Possible Source	Action
P1799	CAN TCM/DSCCM network malfunction	• CAN open circuit fault - TCM to DSCCM • CAN short circuit fault • DSCCM failure • TCM/control valve failure	For CAN tests, REFER to: Communications Network (418-00 Module Communications Network, Diagnosis and Testing). For transmission tests, REFER to: Diagnostic Strategy (307-01 Automatic Transmission/Transaxle, Diagnosis and Testing).

Pinpoint Tests

PINPOINT TEST A : DTC P0101, P0102, P0103; MASS AIR FLOW (MAF) SENSOR CIRCUIT RANGE/PERFORMANCE, HIGH/LOW VOLTAGE	
• NOTE: MAF sensor is also a possible cause of DTCs P0171, P0174.	
• NOTE: Before commencing this test, check the air filter for blockage, the engine air intake and breather systems for leaks, and the TP sensor for additional DTCs.	
TEST CONDITIONS	**DETAILS/RESULTS/ACTIONS**
A1: CHECK THE MAF SENSOR SENSING CIRCUIT FOR HIGH RESISTANCE	
	1 Disconnect the battery negative terminal.
	2 Disconnect the ECM electrical connector, EM80.
	3 Disconnect the MAF sensor electrical connector, PI35.
	4 Measure the resistance between EM80, pin 44 (GW) and PI35, pin 03 (GW).
	Is the resistance greater than 5 ohms? **Yes** REPAIR the high resistance circuit. For additional information, refer to the wiring diagrams. CLEAR the DTC. TEST the system for normal operation. **No** GO to A2.
A2: CHECK THE MAF SENSOR SENSING CIRCUIT FOR SHORT TO HIGH VOLTAGE	
	1 Reconnect the battery negative terminal.
	2 Turn the ignition switch to the ON position.
	3 Measure the voltage between the MAF sensor electrical connector, PI35, pin 03 (GW) and GROUND.
	Is the voltage greater than 3 volts? **Yes** REPAIR the short circuit to high voltage. For additional information, refer to the wiring diagrams. CLEAR the DTC. TEST the system for normal operation. **No** GO to A3.
A3: CHECK THE MAF SENSOR SENSING CIRCUIT FOR SHORT TO GROUND	
• NOTE: The short to GROUND may be intermittent. Move the wiring to attempt to reproduce the conditions under which the DTC was logged, and visually inspect the harness for any signs of chafing, see "visual inspection chart".	
	1 Turn the ignition switch to the OFF position.
	2 Measure the resistance between PI35, pin 03 (GW) and GROUND.
	Is the resistance less than 10,000 ohms? **Yes** REPAIR the short to GROUND. For additional information, refer to the wiring diagrams. CLEAR the DTC. TEST the system for normal operation **No** GO to A4.
A4: CHECK THE MAF SENSOR SUPPLY CIRCUIT VOLTAGE	
	1 Reconnect the ECM electrical connector, EM80.
	2 Turn the ignition switch to the ON position.
	3 Measure the voltage between the MAF sensor electrical connector, PI35, pin 01 (WU) and GROUND.
	Is the voltage greater than 10 volts? **Yes** GO to A5. **No** REPAIR the circuit between the MAF sensor electrical connector, PI35, pin 01 (WU) and BATTERY. This circuit includes the EMS control relay, fuse 14 of the EMS fuse board, and the high power protection module. For additional information, refer to the wiring diagrams. CLEAR the DTC. TEST the system for normal operation.
A5: CHECK THE MAF SENSOR SUPPLY CIRCUIT FOR HIGH RESISTANCE	
	1 Disconnect the battery negative terminal.
	2 Disconnect the EMS fuse board electrical connector, EM19.
	3 Measure the resistance between EM19, pin 08 (WU) and PI35, pin 01 (WU).
	Is the resistance greater than 5 ohms? **Yes** REPAIR the high resistance circuit. For additional information, refer to the wiring diagrams. CLEAR the DTC. TEST the system for normal operation. **No** GO to A6.
A6: CHECK THE MAF SENSOR SUPPLY CIRCUIT FOR SHORT TO GROUND	
	1 Reconnect the battery negative terminal.
	2 Measure the resistance between EM19, pin 08 (WU) and GROUND.
	Is the resistance less than 10,000 ohms? **Yes** REPAIR the short to GROUND. For additional information, refer to the wiring diagrams. CLEAR the DTC. TEST the system for normal operation. **No** INSTALL a new MAF sensor. REFER to: Mass Air Flow (MAF) Sensor (303-14 Electronic Engine Controls, Removal and Installation). CLEAR the DTC. TEST the system for normal operation.

PINPOINT TEST B : DTC P0111, P0112, P0113; INTAKE AIR TEMPERATURE (IAT) SENSOR CIRCUIT RANGE/PERFORMANCE, HIGH/LOW VOLTAGE
• NOTE: The IAT sensor is integral with the Mass Air Flow sensor.

• NOTE: Before commencing this test, check the air filter for blockage and the engine air intake and breather systems for leaks.
REFER to: Intake Air Distribution and Filtering (303-12 Intake Air Distribution and Filtering, Diagnosis and Testing).

TEST CONDITIONS	DETAILS/RESULTS/ACTIONS
B1: CHECK THE IAT SENSOR SENSING CIRCUIT FOR HIGH RESISTANCE	
	1 Disconnect the battery negative terminal.
	2 Disconnect the ECM electrical connector, EM80.
	3 Disconnect the MAF sensor electrical connector, PI35.
	4 Measure the resistance between EM8, pin 71 (O) and PI35, pin 04 (O).
	Is the resistance greater than 5 ohms? **Yes** REPAIR the high resistance circuit. For additional information, refer to the wiring diagrams. CLEAR the DTC. TEST the system for normal operation. **No** GO to B2.
B2: CHECK THE IAT SENSOR SENSING CIRCUIT FOR SHORT TO HIGH VOLTAGE	
	1 Reconnect the battery negative terminal.
	2 Turn the ignition switch to the ON position.
	3 Measure the voltage between PI35, pin 04 (O) and GROUND.
	Is the voltage greater than 3 volts? **Yes** REPAIR the short circuit to high voltage. For additional information, refer to the wiring diagrams. CLEAR the DTC. TEST the system for normal operation. **No** GO to B3.
B3: CHECK THE IAT SENSOR SENSING CIRCUIT FOR SHORT TO GROUND	
	1 Turn the ignition switch to the OFF position.
	2 Measure the resistance between PI35, pin 04 (O) and GROUND.
	Is the resistance less than 10,000 ohms? **Yes** REPAIR the short circuit to GROUND. For additional information, refer to the wiring diagrams. CLEAR the DTC. TEST the system for normal operation. **No** INSTALL a new MAF sensor. REFER to: Mass Air Flow (MAF) Sensor (303-14 Electronic Engine Controls, Removal and Installation). CLEAR the DTC. TEST the system for normal operation.

PINPOINT TEST C : DTC P0116*, P0117, P0118, P0125; ENGINE COOLANT TEMPERATURE (ECT) SENSOR CIRCUIT RANGE/PERFORMANCE, HIGH/LOW VOLTAGE

• NOTE: Before commencing this test, check the coolant level and condition, check the operation of the thermostat, rectify as necessary.

• NOTE: As a guideline, coolant temperature overnight will drop to approximately -20°C to +40°C, (depending on the ambient temperature) at which temperatures, the resistance of the sensor should be 15.04 Kilohms to 1.15 Kilohms.

• NOTE: * DTC P0116 requires a cold start condition for diagnostics. Ideally, park the vehicle outside overnight. Start the engine and leave the engine idling with the heater on full. (This produces the slowest warm-up time) Leave the engine running until normal operating temperature is reached. (80°C, read from the Jaguar approved diagnostic system or scantool) At this temperature, the sensor resistance should be 0.318 Kilohms)

TEST CONDITIONS	DETAILS/RESULTS/ACTIONS
C1: CHECK THE ECT SENSOR SENSING CIRCUIT FOR HIGH RESISTANCE	
	1 Disconnect the battery negative terminal.
	2 Disconnect the ECM electrical connector, EM80.
	3 Disconnect the ECT sensor electrical connector, PI04.
	4 Measure the resistance between EM80. pin 70 (UY) and PI04, pin 02 (UY).
	Is the resistance greater than 5 ohms? **Yes** REPAIR the high resistance circuit. For additional information, refer to the wiring diagrams. CLEAR the DTC. TEST the system for normal operation. **No** GO to C2.
C2: CHECK THE ECT SENSOR SENSING CIRCUIT FOR SHORT TO HIGH VOLTAGE	
	1 Reconnect the battery negative terminal.
	2 Turn the ignition switch to the ON position.
	3 Measure the voltage between PI04, pin 02 (UY) and GROUND.
	Is the voltage greater than 3 volts? **Yes** REPAIR the short circuit to high voltage. For additional information, refer to the wiring diagrams. CLEAR the DTC. TEST the system for normal operation. **No** GO to C3.
C3: CHECK THE ECT SENSOR SENSING CIRCUIT FOR SHORT TO GROUND	
	1 Turn the ignition switch to the OFF position.
	2 Measure the resistance between PI04, pin 02 (UY) and GROUND.
	Is the resistance less than 10,000 ohms? **Yes** REPAIR the short circuit to GROUND. For additional information, refer to the wiring diagrams. CLEAR the DTC. TEST the system for normal operation. **No** INSTALL a new ECT sensor. REFER to: Engine Coolant Temperature (ECT) Sensor - V8 4.2L Petrol (303-14 Electronic Engine Controls, Removal and Installation) / Engine Coolant Temperature (ECT) Sensor - V8 S/C 4.2L Petrol (303-14 Electronic Engine Controls, Removal and Installation). CLEAR the DTC. TEST the system for normal operation.

PINPOINT TEST D : DTC P0121, P0122, P0123; THROTTLE POSITION (TP) SENSOR RANGE/PERFORMANCE, HIGH/LOW VOLTAGE

• NOTE: Early production vehicles have wire colour codes that are different from that shown. Use connector pin numbers for wire identification.

TEST CONDITIONS	DETAILS/RESULTS/ACTIONS
D1: CHECK THE TP SENSOR SENSING CIRCUIT TP1 FOR HIGH RESISTANCE	
	1 Disconnect the battery negative terminal.
	2 Disconnect the ECM electrical connector, EM80.
	3 Disconnect the TP sensor electrical connector, PI06.
	4 Measure the resistance between EM80, pin 75 (N) and PI06, pin 03 (N).
	Is the resistance greater than 5 ohms? **Yes** REPAIR the high resistance circuit. For additional information, refer to the wiring diagrams. CLEAR the DTC. TEST the system for normal operation. **No** GO to D2.
D2: CHECK THE TP SENSOR SENSING CIRCUIT TP1 FOR SHORT TO HIGH VOLTAGE	
	1 Reconnect the battery negative terminal.
	2 Turn the ignition switch to the ON position.
	3 Measure the voltage between PI06, pin 03 (N) and GROUND.
	Is the voltage greater than 5 volts? **Yes** REPAIR the short circuit to high voltage. For additional information, refer to the wiring diagrams. CLEAR the DTC. TEST the system for normal operation. **No** GO to D3.
D3: CHECK THE TP SENSOR SENSING CIRCUIT TP1 FOR SHORT TO GROUND	
	1 Turn the ignition switch to the OFF position.
	2 Measure the resistance between PI06, pin 03 (N) and GROUND.
	Is the resistance less than 10,000 ohms? **Yes** REPAIR the short circuit to GROUND. For additional information, refer to the wiring diagrams. CLEAR the DTC. TEST the system for normal operation. **No** INSTALL a new TP sensor. REFER to: Throttle Body (303-04 Fuel Charging and Controls, Removal and Installation). CLEAR the DTC. TEST the system for normal operation.

PINPOINT TEST E : DTC P0222, P0223; THROTTLE POSITION (TP) SENSOR CIRCUIT TP2 HIGH/LOW VOLTAGE

TEST CONDITIONS	DETAILS/RESULTS/ACTIONS
E1: CHECK TP SENSOR SENSING CIRCUIT TP2 FOR HIGH RESISTANCE	
	1 Disconnect the battery negative terminal.
	2 Disconnect the TP sensor electrical connector, PI06.
	3 Disconnect the ECM electrical connector, EM80.
	4 Measure the resistance between EM80, pin 76 (G) and PI06, pin 02 (G).
	Is the resistance greater than 5 ohms? **Yes** REPAIR the high resistance circuit. For additional information, refer to the wiring diagrams. CLEAR the DTC. TEST the system for normal operation. **No** GO to E2.
E2: CHECK TP SENSOR SENSING CIRCUIT TP2 FOR SHORT TO HIGH VOLTAGE	
	1 Reconnect the battery negative terminal.
	2 Turn the ignition switch to the ON position.
	3 Measure the voltage between PI06, pin 02 (G) and GROUND.
	Is the voltage greater than 5 volts? **Yes** REPAIR the short circuit to high voltage. For additional information, refer to the wiring diagrams. CLEAR the DTC. TEST the system for normal operation. **No** GO to E3.
E3: CHECK TP SENSOR SENSING CIRCUIT TP2 FOR SHORT TO GROUND	
	1 Measure the resistance between PI06, pin 02 (G) and GROUND.
	Is the resistance less than 10,000 ohms? **Yes** REPAIR the short circuit to GROUND. For additional information, refer to the wiring diagrams. CLEAR the DTC. TEST the system for normal operation. **No** INSTALL a new TP sensor. REFER to: Throttle Body (303-04 Fuel Charging and Controls, Removal and Installation). CLEAR the DTC. TEST the system for normal operation.

PINPOINT TEST F : DTC P0131, P0132, P0133, P1646; RIGHT-HAND H02S SENSING CIRCUIT LOW/HIGH CURRENT, SLOW RESPONSE, ECM CONTROL MALFUNCTION

CAUTION: Under no circumstances must the sensor wiring be cut to facilitate removal, should this prove necessary.

• NOTE: Before commencing this test, check the sensor connections and harness, check for exhaust leaks, (a very small exhaust leak can cause this DTC to flag. Check the EGR pipes for cracks/leaks) engine misfire, etc. See "visual inspection chart" and "possible causes".

TEST CONDITIONS	DETAILS/RESULTS/ACTIONS
F1: CHECK THE H02S VARIABLE CIRCUIT FOR HIGH RESISTANCE	
	1 Disconnect the battery negative terminal.
	2 Disconnect the H02S electrical connector, EM21.
	3 Disconnect the ECM electrical connector, EM80.
	4 Measure the resistance between EM21, pin 03 (R) and EM80, pin 83 (R).

	Is the resistance greater than 5 ohms? **Yes** REPAIR the high resistance circuit. For additional information, refer to the wiring diagrams. CLEAR the DTC. TEST the system for normal operation. **No** GO to F2.
F2: CHECK THE H02S VARIABLE CIRCUIT FOR SHORT TO HIGH VOLTAGE	
	1 Reconnect the battery negative terminal.
	2 Turn the ignition switch to the ON position.
	3 Measure the voltage between EM80, pin 83 (R) and GROUND.
	Is the voltage greater than 1 volt? **Yes** REPAIR the short circuit to high voltage. For additional information, refer to the wiring diagrams. CLEAR the DTC. TEST the system for normal operation. **No** GO to F3.
F3: CHECK THE H02S VARIABLE CIRCUIT FOR SHORT TO GROUND	
	1 Turn the ignition switch to the OFF position.
	2 Measure the resistance between EM80, pin 83 (R) and GROUND.
	Is the resistance less than 10,000 ohms? **Yes** REPAIR the short circuit to GROUND. For additional information, refer to the wiring diagrams. CLEAR the DTC. TEST the system for normal operation. **No** GO to F4.
F4: CHECK THE H02S CONSTANT CIRCUIT FOR HIGH RESISTANCE	
	1 Measure the resistance between EM21, pin 04 (Y) and EM80, pin 84 (Y) .
	Is the resistance greater than 5 ohms? **Yes** REPAIR the high resistance circuit. For additional information, refer to the wiring diagrams. CLEAR the DTC. TEST the system for normal operation. **No** GO to F5.
F5: CHECK THE H02S CONSTANT CIRCUIT FOR SHORT TO HIGH VOLTAGE	
	1 Measure the voltage between EM21, pin 04 (Y) and GROUND.
	Is the voltage greater than 1 volt? **Yes** REPAIR the short circuit to high voltage. For additional information, refer to the wiring diagrams. CLEAR the DTC. TEST the system for normal operation. **No** GO to F6.
F6: CHECK THE H02S CONSTANT CIRCUIT FOR SHORT TO GROUND	
	1 Measure the resistance between EM21, pin 04 (Y) and GROUND.
	Is the resistance less than 10,000 ohms? **Yes** REPAIR the short circuit to GROUND. For additional information, refer to the wiring diagrams. CLEAR the DTC. TEST the system for normal operation. **No** INSTALL a new H02S. REFER to: Heated Oxygen Sensor (HO2S) RH (303-14 Electronic Engine Controls, Removal and Installation). CLEAR the DTC. TEST the system for normal operation. If the DTC is repeated, contact dealer technical support for advice on possible ECM failure.

PINPOINT TEST G : DTC P0031, P0032; RIGHT-HAND H02S HEATER CONTROL CIRCUIT HIGH/LOW CURRENT

CAUTION: Under no circumstances must the sensor wiring be cut to facilitate removal, should this prove necessary.

• NOTE: Early production vehicles have wire colour codes that are different from that shown. Use connector pin numbers for wire identification.

• NOTE: Carry out a visual inspection of the HO2S connectors. (Integrity of connections may be affected by heat from catalytic converters)

TEST CONDITIONS	DETAILS/RESULTS/ACTIONS
G1: CHECK H02S HEATER POWER SUPPLY CIRCUIT	
	1 Disconnect the H02S electrical connector, EM21.
	2 Turn the ignition switch to the ON position.
	3 Make sure the O2S heater relay is engaged.
	4 Measure the voltage between EM21, pin 02 (NG) and GROUND.
	Is the voltage greater than 10 volts? **Yes** GO to G2. **No** REPAIR the power supply circuit to the H02S heater. This circuit includes the Right-Hand O2S heater relay, the EMS control relay, fuse 14 of the EMS fuse box, and the high power protection module. For additional information, refer to the wiring diagrams. CLEAR the DTC. TEST the system for normal operation.
G2: CHECK H02S HEATER CONTROL CIRCUIT FROM ECM FOR HIGH RESISTANCE	
	1 Disconnect the battery negative terminal.
	2 Disconnect the ECM electrical connector, EM80.
	3 Measure the resistance between EM80, pin 01 (RU) and EM21, pin 01 (RU).
	4 Measure the resistance between EM80, pin 02 (RU) and EM21, pin 01 (RU).
	Is either resistance greater than 5 ohms? **Yes** REPAIR the high resistance circuit. For additional information, refer to the wiring diagrams. CLEAR the DTC. TEST the system for normal operation. **No** GO to G3.
G3: CHECK H02S HEATER CONTROL CIRCUIT FROM ECM FOR SHORT TO HIGH VOLTAGE	
	1 Reconnect the battery negative terminal.

	2 Turn the ignition switch to the ON position.
	3 Measure the voltage between EM21, pin 01 (RU) and GROUND.
	Is the voltage greater than 3 volts? **Yes** REPAIR the short circuit to high voltage. For additional information, refer to the wiring diagrams. CLEAR the DTC. TEST the system for normal operation. **No** GO to G4.
G4: CHECK H02S HEATER CONTROL CIRCUIT FROM ECM FOR SHORT TO GROUND	
	1 Turn the ignition switch to the OFF position.
	2 Measure the resistance between EM21, pin 01 (RU) and GROUND.
	Is the resistance less than 10,000 ohms? **Yes** REPAIR the short circuit to GROUND. For additional information, refer to the wiring diagrams. CLEAR the DTC. TEST the system for normal operation. **No** INSTALL a new H02S. REFER to: Heated Oxygen Sensor (HO2S) RH (303-14 Electronic Engine Controls, Removal and Installation). CLEAR the DTC. TEST the system for normal operation. If the DTC is repeated, contact dealer technical support for advice on possible ECM failure.

PINPOINT TEST H : DTC P0137, P0138, P0140; RIGHT-HAND CATALYST MONITOR SENSOR SENSING CIRCUIT LOW/HIGH VOLTAGE, NO ACTIVITY

CAUTION: Under no circumstances must the sensor wiring be cut to facilitate removal, should this prove necessary.

• NOTE: Early production vehicles have wire colour codes that are different from that shown. Use connector pin numbers for wire identification.

TEST CONDITIONS	DETAILS/RESULTS/ACTIONS
H1: CHECK THE CATALYST MONITOR SENSOR SENSING CIRCUIT FOR HIGH RESISTANCE	
	1 Disconnect the battery negative terminal.
	2 Disconnect the H02S electrical connector, EM22.
	3 Disconnect the ECM electrical connector, EM80.
	4 Measure the resistance between EM22, pin 04 (N) and EM80, pin 128 (N).
	Is the resistance greater than 5 ohms? **Yes** REPAIR the high resistance circuit. For additional information, refer to the wiring diagrams. CLEAR the DTC. TEST the system for normal operation. **No** GO to H2.
H2: CHECK THE CATALYST MONITOR SENSOR SENSING CIRCUIT FOR SHORT TO HIGH VOLTAGE	
	1 Reconnect the battery negative terminal.
	2 Turn the ignition switch to the ON position.
	3 Measure the voltage between EM22, pin 04 (N) and GROUND.
	Is the voltage greater than 5 volts? **Yes** REPAIR the short circuit to high voltage. For additional information, refer to the wiring diagrams. CLEAR the DTC. TEST the system for normal operation. **No** GO to H3.
H3: CHECK THE CATALYST MONITOR SENSOR SENSING CIRCUIT FOR SHORT TO GROUND	
	1 Turn the ignition switch to the OFF position.
	2 Measure the resistance between EM22, pin 04 (N) and GROUND.
	Is the resistance less than 10,000 ohms? **Yes** REPAIR the short circuit to GROUND. For additional information, refer to the wiring diagrams. CLEAR the DTC. TEST the system for normal operation. **No** GO to H4.
H4: CHECK THE CATALYST MONITOR SENSOR GROUND CIRCUIT FOR HIGH RESISTANCE	
	1 Measure the resistance between EM22, pin 03 (W) and EM80, pin 130 (BR).
	Is the resistance greater than 5 ohms? **Yes** REPAIR the high resistance circuit. For additional information, refer to the wiring diagrams. CLEAR the DTC. TEST the system for normal operation. **No** INSTALL a new catalyst monitor sensor. REFER to: Catalyst Monitor Sensor LH (303-14 Electronic Engine Controls, Removal and Installation). CLEAR the DTC. TEST the system for normal operation.

PINPOINT TEST I : DTC P0037, P0038; RIGHT-HAND CATALYST MONITOR SENSOR HEATER CONTROL CIRCUIT LOW/HIGH RESISTANCE

CAUTION: Under no circumstances must the sensor wiring be cut to facilitate removal, should this prove necessary.

• NOTE: Early production vehicles have wire colour codes that are different from that shown. Use connector pin numbers for wire identification.

TEST CONDITIONS	DETAILS/RESULTS/ACTIONS
I1: CHECK THE POWER SUPPLY TO THE CATALYST MONITOR HEATER	
	1 Disconnect the catalyst monitor sensor electrical connector, EM22.
	2 Turn the ignition switch to the ON position.
	3 Make sure the O2S heater relay is engaged.
	4 Measure the voltage between EM22, pin 02 (NG) and GROUND.

	Is the voltage greater than 10 volts? **Yes** GO to I2. **No** REPAIR the power supply circuit to the H02S heater. This circuit includes the Right-Hand O2S heater relay, the EMS control relay, fuse 14 of the EMS fuse box, and the high power protection module. For additional information, refer to the wiring diagrams. CLEAR the DTC. TEST the system for normal operation.
I2: CHECK THE CATALYST MONITOR HEATER CONTROL CIRCUIT FOR HIGH RESISTANCE	
	1 Disconnect the battery negative terminal.
	2 Disconnect the ECM electrical connector, EM80.
	3 Measure the resistance between EM22, pin 01 (U) and EM80, pin 92 (U).
	Is the resistance greater than 5 ohms? **Yes** REPAIR the high resistance circuit. For additional information, refer to the wiring diagrams. CLEAR the DTC. TEST the system for normal operation. **No** INSTALL a new catalyst monitor sensor. REFER to: Catalyst Monitor Sensor LH (303-14 Electronic Engine Controls, Removal and Installation). CLEAR the DTC. TEST the system for normal operation. If the DTC is repeated, contact dealer technical support for advice on possible ECM failure.

PINPOINT TEST J : DTC P0151, P0152, P0153; LEFT-HAND H02S SENSING CIRCUIT LOW/HIGH CURRENT, SLOW RESPONSE, ECM CONTROL MALFUNCTION

CAUTION: Under no circumstances must the sensor wiring be cut to facilitate removal, should this prove necessary.

• NOTE: Before commencing this test, check the sensor connections and harness, check for exhaust leaks, engine misfire, etc. See "visual inspection chart" and "possible causes".

• NOTE: Early production vehicles have wire colour codes that are different from that shown. Use connector pin numbers for wire identification.

TEST CONDITIONS	DETAILS/RESULTS/ACTIONS
J1: CHECK THE H02S VARIABLE CIRCUIT FOR HIGH RESISTANCE	
	1 Disconnect the battery negative terminal.
	2 Disconnect the H02S electrical connector, EM23.
	3 Disconnect the ECM electrical connector, EM80.
	4 Measure the resistance between EM23, pin 03 (G) and EM80, pin 107 (G).
	Is the resistance greater than 5 ohms? **Yes** REPAIR the high resistance circuit. For additional information, refer to the wiring diagrams. CLEAR the DTC. TEST the system for normal operation. **No** GO to F2.
J2: CHECK THE H02S VARIABLE CIRCUIT FOR SHORT TO HIGH VOLTAGE	
	1 Reconnect the battery negative terminal.
	2 Turn the ignition switch to the ON position.
	3 Measure the voltage between EM23, pin 03 (G) and GROUND.
	Is the voltage greater than 3 volts? **Yes** REPAIR the short circuit to high voltage. For additional information, refer to the wiring diagrams. CLEAR the DTC. TEST the system for normal operation. **No** GO to F3.
J3: CHECK THE H02S VARIABLE CIRCUIT FOR SHORT TO GROUND	
	1 Turn the ignition switch to the OFF position.
	2 Measure the resistance between EM23, pin 03 (G) and GROUND.
	Is the resistance less than 10,000 ohms? **Yes** REPAIR the short circuit to GROUND. For additional information, refer to the wiring diagrams. CLEAR the DTC. TEST the system for normal operation. **No** GO to F4.
J4: CHECK THE H02S CONSTANT CIRCUIT FOR HIGH RESISTANCE	
	1 Measure the resistance between EM23, pin 04 (N) and EM80, pin 108 (N).
	Is the resistance greater than 5 ohms? **Yes** REPAIR the high resistance circuit. For additional information, refer to the wiring diagrams. CLEAR the DTC. TEST the system for normal operation. **No** GO to J5.
J5: CHECK THE H02S CONSTANT CIRCUIT FOR SHORT TO HIGH VOLTAGE	
	1 Measure the voltage between EM23, pin 04 (N) and GROUND.
	Is the voltage greater than 3 volts? **Yes** REPAIR the short circuit to high voltage. For additional information, refer to the wiring diagrams. CLEAR the DTC. TEST the system for normal operation. **No** GO to J6.
J6: CHECK THE H02S CONSTANT CIRCUIT FOR SHORT TO GROUND	
	1 Measure the resistance between EM23, pin 04 (N) and GROUND.
	Is the resistance less than 10,000 ohms? **Yes** REPAIR the short circuit to GROUND. For additional information, refer to the wiring diagrams. CLEAR the DTC. TEST the system for normal operation. **No** INSTALL a new H02S. REFER to: Heated Oxygen Sensor (HO2S) RH (303-14 Electronic Engine Controls, Removal and Installation). CLEAR the DTC. TEST the system for normal operation. If the DTC is repeated, contact dealer technical support for

	advice on possible ECM failure.

PINPOINT TEST K : DTC P0051, P0052; LEFT-HAND H02S HEATER CONTROL CIRCUIT HIGH/LOW CURRENT

CAUTION: Under no circumstances must the sensor wiring be cut to facilitate removal, should this prove necessary.

• NOTE: Early production vehicles have wire colour codes that are different from that shown. Use connector pin numbers for wire identification.

• NOTE: Carry out a visual inspection of the HO2S connectors. (Integrity of connections may be affected by heat from catalytic converters)

TEST CONDITIONS	DETAILS/RESULTS/ACTIONS
K1: CHECK H02S HEATER POWER SUPPLY CIRCUIT	
	1 Disconnect the H02S electrical connector, EM23.
	2 Turn the ignition switch to the ON position.
	3 Measure the voltage between EM23, pin 02 (WG) and GROUND.
	Is the voltage greater than 10 volts? **Yes** GO to K2. **No** REPAIR the power supply circuit to the H02S heater. This circuit includes the Left-Hand O2S heater relay, the EMS control relay, fuse 14 of the EMS fuse box, and the high power protection module. For additional information, refer to the wiring diagrams. CLEAR the DTC. TEST the system for normal operation.
K2: CHECK H02S HEATER CONTROL CIRCUIT FROM ECM FOR HIGH RESISTANCE	
	1 Disconnect the battery negative terminal.
	2 Disconnect the ECM electrical connector, EM80.
	3 Measure the resistance between EM23, pin 01 (UY) and EM80, pin 55 (UY).
	4 Measure the resistance between EM23, pin 01 (UY) and EM80, pin 56 (UY).
	Is either resistance greater than 5 ohms? **Yes** REPAIR the high resistance circuit. For additional information, refer to the wiring diagrams. CLEAR the DTC. TEST the system for normal operation. **No** GO to K3.
K3: CHECK H02S HEATER CONTROL CIRCUIT FROM ECM FOR SHORT TO HIGH VOLTAGE	
	1 Reconnect the battery negative terminal.
	2 Turn the ignition switch to the ON position.
	3 Measure the voltage between EM23, pin 01 (UY) and GROUND.
	Is the voltage greater than 3 volts? **Yes** REPAIR the short circuit to high voltage. For additional information, refer to the wiring diagrams. CLEAR the DTC. TEST the system for normal operation. **No** GO to K4.
K4: CHECK H02S HEATER CONTROL CIRCUIT FROM ECM FOR SHORT TO GROUND	
	1 Turn the ignition switch to the OFF position.
	2 Measure the resistance between EM23, pin 01 (UY) and GROUND.
	Is the resistance less than 10,000 ohms? **Yes** REPAIR the short circuit to GROUND. For additional information, refer to the wiring diagrams. CLEAR the DTC. TEST the system for normal operation. **No** INSTALL a new H02S. REFER to: Heated Oxygen Sensor (HO2S) LH (303-14 Electronic Engine Controls, Removal and Installation). CLEAR the DTC. TEST the system for normal operation. If the DTC is repeated, contact dealer technical support for advice on possible ECM failure.

PINPOINT TEST L : DTC P0057, P0058; LEFT-HAND CATALYST MONITOR SENSOR HEATER CONTROL CIRCUIT LOW/HIGH RESISTANCE

CAUTION: Under no circumstances must the sensor wiring be cut to facilitate removal, should this prove necessary.

• NOTE: Early production vehicles have wire colour codes that are different from that shown. Use connector pin numbers for wire identification.

TEST CONDITIONS	DETAILS/RESULTS/ACTIONS
L1: CHECK THE POWER SUPPLY TO THE CATALYST MONITOR SENSOR HEATER	
	1 Disconnect the catalyst monitor sensor electrical connector, EM24.
	2 Turn the ignition switch to the ON position.
	3 Make sure the O2S heater relay is engaged.
	4 Measure the voltage between EM24, pin 02 (WG) and GROUND.
	Is the voltage greater than 10 volts? **Yes** GO to L2. **No** REPAIR the power supply circuit to the H02S heater. This circuit includes the Left-Hand O2S heater relay, the EMS control relay, fuse 14 of the EMS fuse box, and the high power protection module. For additional information, refer to the wiring diagrams. CLEAR the DTC. TEST the system for normal operation.
L2: CHECK THE CATALYST MONITOR SENSOR HEATER CONTROL CIRCUIT FOR HIGH RESISTANCE	
	1 Disconnect the battery negative terminal.
	2 Disconnect the ECM electrical connector, EM80.
	3 Measure the resistance between EM24, pin 01 (Y) and EM80, pin 93 (Y).
	Is the resistance greater than 5 ohms? **Yes** REPAIR the high resistance circuit. For additional information, refer to the wiring diagrams. CLEAR the DTC. TEST the system for normal operation. **No** INSTALL a new catalyst monitor sensor.

	REFER to: Catalyst Monitor Sensor LH (303-14 Electronic Engine Controls, Removal and Installation). CLEAR the DTC. TEST the system for normal operation. If the DTC is repeated, contact dealer technical support for advice on possible ECM failure.

PINPOINT TEST M : DTC P0196, P0197, P0198; ENGINE OIL TEMPERATURE (EOT) SENSOR RANGE/PERFORMANCE, HIGH/LOW VOLTAGE

TEST CONDITIONS	DETAILS/RESULTS/ACTIONS
M1: CHECK THE EOT SENSOR SENSING CIRCUIT FOR HIGH RESISTANCE	
	1 Disconnect the battery negative terminal.
	2 Disconnect the EOT sensor electrical connector, PI38.
	3 Disconnect the ECM electrical connector, EM80.
	4 Measure the resistance between PI38, pin 01 (YG) and EM80, pin 78 (YG).
	Is the resistance greater than 5 ohms? **Yes** REPAIR the high resistance circuit. For additional information, refer to the wiring diagrams. CLEAR the DTC. TEST the system for normal operation. **No** GO to M2.
M2: CHECK THE EOT SENSOR SENSING CIRCUIT FOR SHORT TO HIGH VOLTAGE	
	1 Reconnect the battery negative terminal.
	2 Turn the ignition switch to the ON position.
	3 Measure the voltage between PI38, pin 01 (YG) and GROUND.
	Is the voltage greater than 3 volts? **Yes** REPAIR the short circuit to high voltage. For additional information, refer to the wiring diagrams. CLEAR the DTC. TEST the system for normal operation. **No** GO to M3.
M3: CHECK THE EOT SENSOR SENSING CIRCUIT FOR SHORT TO GROUND	
	1 Turn the ignition switch to the OFF position.
	2 Measure the resistance between PI38, pin 01 (YG) and GROUND.
	Is the resistance less than 10,000 ohms? **Yes** REPAIR the short circuit to GROUND. For additional information, refer to the wiring diagrams. CLEAR the DTC. TEST the system for normal operation. **No** GO to M4.
M4: CHECK THE EOT SENSOR GROUND CIRCUIT FOR HIGH RESISTANCE	
	1 Measure the resistance between PI38, pin 02 (BG) and EM80, pin 19 (BG).
	Is the resistance greater than 5 ohms? **Yes** REPAIR the high resistance circuit. This circuit includes harness splices, PIS1 and EMS2. For additional information, refer to the wiring diagrams. CLEAR the DTC. TEST the system for normal operation. **No** INSTALL a new EOT sensor. REFER to: Oil Temperature Sensor (303-14 Electronic Engine Controls, Removal and Installation). CLEAR the DTC. TEST the system for normal operation. If the DTC is repeated, contact dealer technical support for advice on possible ECM failure.

PINPOINT TEST N : DTC P0157, P0158, P0160; LEFT-HAND CATALYST MONITOR SENSOR SENSING CIRCUIT LOW/HIGH VOLTAGE, NO ACTIVITY

CAUTION: Under no circumstances must the sensor wiring be cut to facilitate removal, should this prove necessary.

• NOTE: Early production vehicles have wire colour codes that are different from that shown. Use connector pin numbers for wire identification.

TEST CONDITIONS	DETAILS/RESULTS/ACTIONS
N1: CHECK THE CATALYST MONITOR SENSOR SENSING CIRCUIT FOR HIGH RESISTANCE	
	1 Disconnect the battery negative terminal.
	2 Disconnect the catalyst monitor sensor electrical connector, EM24.
	3 Disconnect the ECM electrical connector, EM80.
	4 Measure the resistance between EM24, pin 04 (N) and EM80, pin 129 (N).
	Is the resistance greater than 5 ohms? **Yes** REPAIR the high resistance circuit. For additional information, refer to the wiring diagrams. CLEAR the DTC. TEST the system for normal operation. **No** GO to N2.
N2: CHECK THE CATALYST MONITOR SENSOR SENSING CIRCUIT FOR SHORT TO HIGH VOLTAGE	
	1 Reconnect the battery negative terminal.
	2 Turn the ignition switch to the ON position.
	3 Measure the voltage between EM24, pin 04 (N) and GROUND.
	Is the voltage greater than 3 volts? **Yes** REPAIR the short circuit to high voltage. For additional information, refer to the wiring diagrams. CLEAR the DTC. TEST the system for normal operation. **No** GO to N3.
N3: CHECK THE CATALYST MONITOR SENSOR SENSING CIRCUIT FOR SHORT TO GROUND	
	1 Turn the ignition switch to the OFF position.
	2 Measure the resistance between EM24, pin 04 (N) and GROUND.

	Is the resistance less than 10,000 ohms? **Yes** REPAIR the short circuit to GROUND. For additional information, refer to the wiring diagrams. CLEAR the DTC. TEST the system for normal operation. **No** GO to N4.
N4: CHECK THE CATALYST MONITOR SENSOR GROUND CIRCUIT FOR OPEN CIRCUIT	
	1 Measure the resistance between EM24, pin 03 (W) and EM80, pin 130 (BR).
	Is the resistance greater than 5 ohms? **Yes** REPAIR the circuit. For additional information, refer to the wiring diagrams. CLEAR the DTC. TEST the system for normal operation. **No** INSTALL a new catalyst monitor sensor. REFER to: Catalyst Monitor Sensor LH (303-14 Electronic Engine Controls, Removal and Installation). CLEAR the DTC. TEST the system for normal operation.

PINPOINT TEST O : DTC P0327, P0328; RIGHT-HAND KNOCK SENSOR (KS) HIGH/LOW VOLTAGE	
• NOTE: Before commencing this test, make sure that the sensor is making a good electrical contact with the cylinder block. See "possible causes".	
• NOTE: Early production vehicles have wire colour codes that are different from that shown. Use connector pin numbers for wire identification.	
TEST CONDITIONS	**DETAILS/RESULTS/ACTIONS**
O1: CHECK KS SENSING CIRCUIT FOR HIGH RESISTANCE	
	1 Disconnect the battery negative terminal.
	2 Disconnect the KS electrical connector, PI26.
	3 Disconnect the ECM electrical connector, EM80.
	4 Measure the resistance between PI26, pin 01 (N) and EM80, pin 98 (N).
	Is the resistance greater than 5 ohms? **Yes** REPAIR the high resistance circuit. For additional information, refer to the wiring diagrams. CLEAR the DTC. TEST the system for normal operation. **No** GO to O2.
O2: CHECK KS SENSING CIRCUIT FOR SHORT TO HIGH VOLTAGE	
	1 Turn the ignition switch to the ON position.
	2 Reconnect the battery negative terminal.
	3 Measure the voltage between PI26, pin 01 (N) and GROUND.
	Is the voltage greater than 5 volts? **Yes** REPAIR the short circuit to high voltage. For additional information, refer to the wiring diagrams. CLEAR the DTC. TEST the system for normal operation. **No** GO to O3.
O3: CHECK KS SENSING CIRCUIT FOR SHORT TO GROUND	
	1 Turn the ignition switch to the OFF position.
	2 Measure the resistance between PI26, pin 01 (N) and GROUND.
	Is the resistance less than 10,000 ohms? **Yes** REPAIR the short circuit to GROUND. For additional information, refer to the wiring diagrams. CLEAR the DTC. TEST the system for normal operation. **No** GO to O4.
O4: CHECK KS GROUND CIRCUIT FOR HIGH RESISTANCE	
	1 Measure the resistance between PI26, pin 02 (W) and EM80, pin 100 (BG).
	Is the resistance greater than 5 ohms? **Yes** REPAIR the high resistance circuit. For additional information, refer to the wiring diagrams. CLEAR the DTC. TEST the system for normal operation. **No** INSTALL a new KS. REFER to: Knock Sensor (KS) LH (303-14 Electronic Engine Controls, Removal and Installation). CLEAR the DTC. TEST the system for normal operation.

PINPOINT TEST P : DTC P0332, P0333; LEFT-HAND KNOCK SENSOR (KS) HIGH/LOW VOLTAGE	
• NOTE: Before commencing this test, make sure that the sensor is making a good electrical contact with the cylinder block. See "possible causes".	
TEST CONDITIONS	**DETAILS/RESULTS/ACTIONS**
P1: CHECK KS SENSING CIRCUIT FOR HIGH RESISTANCE	
	1 Disconnect the battery negative terminal.
	2 Disconnect the KS electrical connector, PI27.
	3 Disconnect the ECM electrical connector, EM80.
	4 Measure the resistance between PI27, pin 01 (N) and EM80, pin 99 (N).
	Is the resistance greater than 5 ohms? **Yes** REPAIR the high resistance circuit. For additional information, refer to the wiring diagrams. CLEAR the DTC. TEST the system for normal operation. **No** GO to P2.
P2: CHECK KS SENSING CIRCUIT FOR SHORT TO HIGH VOLTAGE	
	1 Turn the ignition switch to the ON position.
	2 Reconnect the battery negative terminal.
	3 Measure the voltage between PI27, pin 01 (N) and GROUND.

	Is the voltage greater than 3 volts? **Yes** REPAIR the short circuit to high voltage. For additional information, refer to the wiring diagrams. CLEAR the DTC. TEST the system for normal operation. **No** GO to P3.
P3: CHECK KS SENSING CIRCUIT FOR SHORT TO GROUND	
	1 Turn the ignition switch to the OFF position.
	2 Measure the resistance between PI27, pin 01 (N) and GROUND.
	Is the resistance less than 10,000 ohms? **Yes** REPAIR the short circuit to GROUND. For additional information, refer to the wiring diagrams. CLEAR the DTC. TEST the system for normal operation. **No** GO to P4.
P4: CHECK KS GROUND CIRCUIT FOR HIGH RESISTANCE	
	1 Measure the resistance between PI27, pin 02 (W) and EM80, pin 100 (BG).
	Is the resistance greater than 5 ohms? **Yes** REPAIR the high resistance circuit. For additional information, refer to the wiring diagrams. CLEAR the DTC. TEST the system for normal operation. **No** INSTALL a new KS. REFER to: Knock Sensor (KS) LH (303-14 Electronic Engine Controls, Removal and Installation). CLEAR the DTC. TEST the system for normal operation.

PINPOINT TEST Q : DTC P0335, P0336; CRANKSHAFT POSITION (CKP) SENSOR CIRCUIT RANGE/PERFORMANCE, CIRCUIT MALFUNCTION

• NOTE: The clearance between the CKP sensor and the reluctor ring should be checked at 90° intervals. The air gap between the two should be no greater than 4.5 mm at any point.

TEST CONDITIONS	DETAILS/RESULTS/ACTIONS
Q1: CHECK THE CKP SENSOR FOR CORRECT INSTALLATION	
	1 Turn the ignition switch to the OFF position.
	2 Check the CKP sensor for correct installation.
	Is the CKP sensor correctly installed? **Yes** GO to Q2. **No** INSTALL the CKP sensor correctly. REFER to: Crankshaft Position (CKP) Sensor (303-14 Electronic Engine Controls, Removal and Installation). Reconnect the sensor. CLEAR the DTCs. TEST the system for normal operation.
Q2: CHECK THE CKP SENSOR FOR DEBRIS	
	1 Remove the CKP sensor and inspect for debris.
	Is the CKP sensor free of debris? **Yes** GO to Q3. **No** CLEAN the sensor and wheel. INSTALL the sensor. REFER to: Crankshaft Position (CKP) Sensor (303-14 Electronic Engine Controls, Removal and Installation). Reconnect the sensor. CLEAR the DTCs. TEST the system for normal operation.
Q3: CHECK THE CKP SENSOR SENSING CIRCUIT FOR HIGH RESISTANCE	
	1 Disconnect the battery negative terminal.
	2 Disconnect the ECM electrical connector, EM80.
	3 Disconnect the CKP sensor electrical connector, PI17.
	4 Measure the resistance between PI17, pin 02 (Y) and EM80, pin 36 (Y).
	Is the resistance greater than 5 ohms? **Yes** REPAIR the high resistance circuit. For additional information, refer to the wiring diagrams. CLEAR the DTC. TEST the system for normal operation. **No** GO to Q4.
Q4: CHECK THE CKP SENSOR SENSING CIRCUIT FOR SHORT TO HIGH VOLTAGE	
	1 Reconnect the battery negative terminal.
	2 Turn the ignition switch to the ON position.
	3 Measure the voltage between PI17, pin 02 (Y) and GROUND.
	Is the voltage greater than 3 volts? **Yes** REPAIR the short circuit to high voltage. For additional information, refer to the wiring diagrams. CLEAR the DTC. TEST the system for normal operation. **No** GO to Q5.
Q5: CHECK THE CKP SENSOR SENSING CIRCUIT FOR SHORT TO GROUND	
	1 Turn the ignition switch to the OFF position.
	2 Measure the resistance between PI17, pin 02 (Y) and GROUND.
	Is the resistance less than 10,000 ohms? **Yes** REPAIR the short circuit to GROUND. For additional information, refer to the wiring diagrams. CLEAR the DTC. TEST the system for normal operation. **No** GO to Q6.
Q6: CHECK THE CKP SENSOR GROUND CIRCUIT FOR HIGH RESISTANCE	
	1 Measure the resistance between PI17, pin 01 (P) and EM80, pin 37 (P).

	Is the resistance greater than 5 ohms? **Yes** REPAIR the high resistance circuit. For additional information, refer to the wiring diagrams. CLEAR the DTC. TEST the system for normal operation. **No** INSTALL a new CKP sensor. REFER to: Crankshaft Position (CKP) Sensor (303-14 Electronic Engine Controls, Removal and Installation). CLEAR the DTC. TEST the system for normal operation.

PINPOINT TEST R : DTC P0340, P0341; RIGHT-HAND CAMSHAFT POSITION (CMP) SENSOR CIRCUIT RANGE/PERFORMANCE, CIRCUIT MALFUNCTION	
TEST CONDITIONS	**DETAILS/RESULTS/ACTIONS**
R1: CHECK THE CMP SENSOR FOR CORRECT INSTALLATION	
	1 Turn the ignition switch to the OFF position.
	2 Check the CMP sensor for correct installation.
	Is the CMP sensor correctly installed? **Yes** GO to R2. **No** INSTALL the CMP sensor correctly. REFER to: Camshaft Position (CMP) Sensor RH (303-14 Electronic Engine Controls, Removal and Installation). CLEAR the DTCs. TEST the system for normal operation.
R2: CHECK THE CMP SENSOR FOR FOREIGN DEBRIS	
	1 Remove the CMP sensor and inspect for foreign debris.
	Is the CMP sensor free of foreign debris? **Yes** GO to Q3. **No** CLEAN the sensor and wheel. INSTALL the sensor. REFER to: Camshaft Position (CMP) Sensor RH (303-14 Electronic Engine Controls, Removal and Installation). CLEAR the DTCs. TEST the system for normal operation.
R3: CHECK THE CMP SENSOR SENSING CIRCUIT FOR HIGH RESISTANCE	
	1 Disconnect the battery negative terminal.
	2 Disconnect the CMP sensor electrical connector, PI16.
	3 Disconnect the ECM electrical connector, EM80.
	4 Measure the resistance between PI16, pin 02 (G) and EM80, pin 94 (G).
	Is the resistance greater than 5 ohms? **Yes** REPAIR the high resistance circuit. For additional information, refer to the wiring diagrams. CLEAR the DTC. TEST the system for normal operation. **No** GO to R3.
R4: CHECK THE CMP SENSOR SENSING CIRCUIT FOR SHORT TO HIGH VOLTAGE	
	1 Reconnect the battery negative terminal.
	2 Turn the ignition switch to the ON position.
	3 Measure the voltage between PI16, pin 02 (G) and GROUND.
	Is the voltage greater than 3 volts? **Yes** REPAIR the short circuit to high voltage. For additional information, refer to the wiring diagrams. CLEAR the DTC. TEST the system for normal operation. **No** GO to R5.
R5: CHECK THE CMP SENSOR SENSING CIRCUIT FOR SHORT TO GROUND	
	1 Turn the ignition switch to the OFF position.
	2 Measure the resistance between PI16, pin 02 (G) and GROUND.
	Is the resistance less than 10,000 ohms? **Yes** REPAIR the short circuit to GROUND. For additional information, refer to the wiring diagrams. CLEAR the DTC. TEST the system for normal operation. **No** GO to R6.
R6: CHECK THE CMP SENSOR GROUND CIRCUIT FOR HIGH RESISTANCE	
	1 Measure the resistance between PI16, pin 01 (N) and EM80, pin 95 (N).
	Is the resistance greater than 5 ohms? **Yes** REPAIR the high resistance circuit. For additional information, refer to the wiring diagrams. CLEAR the DTC. TEST the system for normal operation. **No** INSTALL a new CMP sensor. REFER to: Camshaft Position (CMP) Sensor RH (303-14 Electronic Engine Controls, Removal and Installation). CLEAR the DTC. TEST the system for normal operation.

PINPOINT TEST S : DTC P0480; RADIATOR COOLING FAN MODULE DRIVE CIRCUIT MALFUNCTION	
TEST CONDITIONS	**DETAILS/RESULTS/ACTIONS**
S1: CHECK THE RADIATOR FAN MODULE PERMANENT SUPPLY	
	1 Disconnect the fan module electrical connector, LF36.
	2 Turn the ignition switch to the ON position.
	3 Measure the voltage between LF36, pin 1 (BG) and GROUND.
	Is the voltage less than 10 volts? **Yes** REPAIR the circuit between the cooling fan module and battery. This circuit includes the Cooling fans fuse box (80A) and the high power protection module. For additional information, refer to the wiring diagrams. CLEAR the DTC. TEST the system for normal operation. **No** GO to T1.

S2: CHECK THE RADIATOR FAN MODULE GROUND	
	1 Turn the ignition switch to the OFF position.
	2 Measure the resistance between LF36, pin 02 (B) and GROUND.
	Is the resistance greater than 5 ohms? **Yes** REPAIR the high resistance circuit. For additional information, refer to the wiring diagrams. CLEAR the DTC. TEST the system for normal operation. **No** GO to S3.
S3: CHECK THE RADIATOR FAN MODULE EMS SWITCHED SUPPLY	
	1 Reconnect the fan module electrical connector, LF36.
	2 Disconnect the fan module electrical connector, LF35.
	3 Turn the ignition switch to the CRANK position.
	4 Measure the voltage between LF35, pin 02 (WU) and GROUND.
	Is the voltage less than 10 volts? **Yes** REPAIR the circuit between the cooling fan module and battery. This circuit includes the EMS fuse box, (fuse 14) the EMS control relay, and the high power protection module. For additional information, refer to the wiring diagrams. CLEAR the DTC. TEST the system for normal operation. **No** GO to S4.
S4: CHECK THE ECM TO RADIATOR FAN MODULE CIRCUIT FOR HIGH RESISTANCE	
	1 Turn the ignition switch to the OFF position.
	2 Disconnect the battery negative terminal.
	3 Disconnect the ECM electrical connector, EM80.
	4 Measure the resistance between LF35, pin 01 (W) and EM80, pin 51 (W).
	Is the resistance greater than 5 ohms? **Yes** REPAIR the high resistance circuit. For additional information, refer to the wiring diagrams. CLEAR the DTC. TEST the system for normal operation. **No** GO to S5.
S5: CHECK THE ECM TO RADIATOR FAN MODULE CIRCUIT FOR SHORT TO HIGH VOLTAGE	
	1 Reconnect the battery negative terminal.
	2 Turn the ignition switch to the ON position.
	3 Measure the voltage between LF35, pin 01 (W) and GROUND.
	Is the voltage greater than 3 volts? **Yes** REPAIR the short circuit. For additional information, refer to the wiring diagrams. CLEAR the DTC. TEST the system for normal operation. **No** GO to S6.
S6: CHECK THE ECM TO RADIATOR FAN MODULE CIRCUIT FOR SHORT TO GROUND	
	1 Measure the resistance between LF35, pin 01 (W) and GROUND.
	Is the resistance less than 10,000 ohms? **Yes** REPAIR the short circuit. For additional information, refer to the wiring diagrams. CLEAR the DTC. TEST the system for normal operation. **No** INSTALL a new radiator cooling fan module. REFER to: Cooling Fan Module (303-03A Engine Cooling, Removal and Installation). CLEAR the DTC. TEST the system for normal operation.

PINPOINT TEST T : DTC P0560; BATTERY POWER SUPPLY VOLTAGE MALFUNCTION	
TEST CONDITIONS	**DETAILS/RESULTS/ACTIONS**
T1: CHECK THE BATTERY POWER SUPPLY TO THE ECM	
	1 Disconnect the ECM electrical connector, EM80.
	2 Measure the voltage between EM80, pin 22 (NR) and GROUND.
	Is the voltage greater than 10 volts? **Yes** Recheck the DTCs. **No** REPAIR the battery power supply circuit. This circuit includes fuse 4 of the EMS fuse box, and the high power protection module. For additional information, refer to the wiring diagrams. CLEAR the DTC. TEST the system for normal operation.

PINPOINT TEST U : DTC P1104; MASS AIR FLOW (MAF) SENSOR GROUND MALFUNCTION	
TEST CONDITIONS	**DETAILS/RESULTS/ACTIONS**
U1: CHECK THE MAF SENSOR GROUND	
	1 Disconnect the MAF sensor electrical connector, PI35.
	2 Turn the ignition switch to the ON position.
	3 Measure the resistance between PI35, pin 02 (BW) and GROUND.
	Is the resistance greater than 5 ohms? **Yes** GO to U2. **No** INSTALL a new MAF sensor. REFER to: Mass Air Flow (MAF) Sensor (303-14 Electronic Engine Controls, Removal and Installation). CLEAR the DTC. TEST the system for normal operation.
U2: CHECK THE MAF SENSOR GROUND CIRCUIT FOR HIGH RESISTANCE	
	1 Disconnect the battery negative terminal.
	2 Disconnect the ECM electrical connector, EM80.
	3 Measure the resistance between PI35, pin 02 (BW) and EM80, pins 45 and 46 (BW).

	Is either resistance greater than 5 ohms? **Yes** REPAIR the high resistance circuit. For additional information, refer to the wiring diagrams. CLEAR the DTC. TEST the system for normal operation. **No** GO to U3.
U3: CHECK THE MAF SENSOR GROUND CIRCUIT FOR SHORT TO HIGH VOLTAGE	
	1 Reconnect the battery negative terminal.
	2 Turn the ignition switch to the ON position.
	3 Measure the voltage between PI35, pin 02 (BW) and GROUND.
	Is the voltage greater than 3 volts? **Yes** REPAIR the short circuit. For additional information, refer to the wiring diagrams. CLEAR the DTC. TEST the system for normal operation. **No** Contact dealer technical support for advice on possible ECM failure.

PINPOINT TEST V : DTC P1122, P1123*; ACCELERATOR PEDAL POSITION (APP) SENSOR SENSING CIRCUIT 1 HIGH/LOW VOLTAGE	
• NOTE: * P1123 could also be flagged by both sensor element sensing circuits having faults	
• NOTE: Early production vehicles have wire colour codes that are different from that shown. Use connector pin numbers for wire identification.	
TEST CONDITIONS	**DETAILS/RESULTS/ACTIONS**
V1: CHECK THE APP SENSOR SENSING CIRCUIT 1 FOR HIGH RESISTANCE	
	1 Disconnect the battery negative terminal.
	2 Disconnect the ECM electrical connector, EM80.
	3 Disconnect the APP sensor electrical connector, EM06.
	4 Measure the resistance between EM06, pin 03 (R) and EM80, pin 102 (R).
	Is the resistance greater than 5 ohms? **Yes** REPAIR the high resistance circuit. For additional information, refer to the wiring diagrams. CLEAR the DTC. TEST the system for normal operation. **No** GO to V2.
V2: CHECK THE APP SENSOR SENSING CIRCUIT FOR SHORT TO HIGH VOLTAGE	
	1 Reconnect the battery negative terminal.
	2 Turn the ignition switch to the ON position.
	3 Measure the voltage between EM06, pin 03 (R) and GROUND.
	Is the voltage greater than 3 volts? **Yes** REPAIR the short circuit. For additional information, refer to the wiring diagrams. CLEAR the DTC. TEST the system for normal operation. **No** GO to V3.
V3: CHECK THE APP SENSOR SENSING CIRCUIT FOR SHORT TO GROUND	
	1 Turn the ignition switch to the OFF position.
	2 Measure the resistance between EM06, pin 03 (B) and GROUND.
	Is the resistance less than 10,000 ohms? **Yes** REPAIR the short circuit. For additional information, refer to the wiring diagrams. CLEAR the DTC. TEST the system for normal operation. **No** GO to V4.
V4: CHECK THE APP SENSOR SUPPLY VOLTAGE AT THE SENSOR	
	1 Reconnect the ECM electrical connector, EM80.
	2 Turn the ignition switch to the ON position.
	3 Measure the voltage between EM06, pin 01 (OY) and GROUND.
	Is the voltage less than 4 volts? **Yes** GO to V5. **No** INSTALL a new APP sensor. REFER to: Accelerator Pedal Position (APP) Sensor (303-14 Electronic Engine Controls, Removal and Installation). CLEAR the DTC. TEST the system for normal operation.
V5: CHECK THE APP SENSOR SUPPLY VOLTAGE CIRCUIT FOR HIGH RESISTANCE	
	1 Turn the ignition switch to the OFF position.
	2 Disconnect the ECM electrical connector, EM80.
	3 Measure the resistance between EM80, pin 12 (OY) and EM06, pin 01 (OY).
	Is the resistance greater than 5 ohms? **Yes** REPAIR the high resistance circuit. For additional information, refer to the wiring diagrams. CLEAR the DTC. TEST the system for normal operation. **No** Check the ECM power supplies. (Recheck DTCs. P1104 may be flagged).

PINPOINT TEST W : DTC P1215, P1216*; ACCELERATOR PEDAL POSITION (APP) SENSOR SENSING CIRCUIT 2 HIGH/LOW VOLTAGE	
• NOTE: * P1123 could also be flagged by both sensor element sensing circuits having faults	
• NOTE: Early production vehicles have wire colour codes that are different from that shown. Use connector pin numbers for wire identification.	
TEST CONDITIONS	**DETAILS/RESULTS/ACTIONS**
W1: CHECK THE APP SENSOR SENSING CIRCUIT FOR HIGH RESISTANCE	
	1 Disconnect the battery negative terminal.

	2 Disconnect the ECM electrical connector, EM80.
	3 Disconnect the APP sensor electrical connector, EM06.
	4 Measure the resistance between EM06, pin 04 (Y) and EM80, pin 103 (Y).
	Is the resistance greater than 5 ohms? **Yes** REPAIR the high resistance circuit. For additional information, refer to the wiring diagrams. CLEAR the DTC. TEST the system for normal operation. **No** GO to W2.
W2: CHECK THE APP SENSOR SENSING CIRCUIT FOR SHORT TO HIGH VOLTAGE	
	1 Reconnect the battery negative terminal.
	2 Turn the ignition switch to the ON position.
	3 Measure the voltage between EM06, pin 04 (Y) and GROUND.
	Is the voltage greater than 3 volts? **Yes** REPAIR the short circuit. For additional information, refer to the wiring diagrams. CLEAR the DTC. TEST the system for normal operation. **No** GO to W3.
W3: CHECK THE APP SENSOR SENSING CIRCUIT FOR SHORT TO GROUND	
	1 Turn the ignition switch to the OFF position.
	2 Measure the resistance between EM06, pin 04 (Y) and GROUND.
	Is the resistance less than 10,000 ohms? **Yes** REPAIR the short circuit. For additional information, refer to the wiring diagrams. CLEAR the DTC. TEST the system for normal operation. **No** GO to W4.
W4: CHECK THE APP SENSOR SUPPLY VOLTAGE AT THE SENSOR	
	1 Reconnect the ECM electrical connector, EM80.
	2 Turn the ignition switch to the ON position.
	3 Measure the voltage between EM06, pin 01 (OY) and GROUND.
	Is the voltage less than 4 volts? **Yes** GO to W5. **No** INSTALL a new APP sensor. REFER to: Accelerator Pedal Position (APP) Sensor (303-14 Electronic Engine Controls, Removal and Installation). CLEAR the DTC. TEST the system for normal operation.
W5: CHECK THE APP SENSOR SUPPLY VOLTAGE CIRCUIT FOR HIGH RESISTANCE	
	1 Turn the ignition switch to the OFF position.
	2 Disconnect the ECM electrical connector, EM80.
	3 Measure the resistance between EM06, pin 01 (OY) and EM80, pin 12 (OY).
	Is the resistance greater than 5 ohms? **Yes** REPAIR the high resistance circuit. For additional information, refer to the wiring diagrams. CLEAR the DTC. TEST the system for normal operation. **No** Check the ECM power supplies. (Recheck DTCs. P1104 may be flagged).

PINPOINT TEST X : DTC P1229; THROTTLE MOTOR CONTROL CIRCUIT MALFUNCTION

• NOTE: Early production vehicles have wire colour codes that are different from that shown. Use connector pin numbers for wire identification.

TEST CONDITIONS	DETAILS/RESULTS/ACTIONS
X1: CHECK THE THROTTLE MOTOR TO ECM CIRCUIT 1 FOR HIGH RESISTANCE	
	1 Disconnect the battery negative terminal.
	2 Disconnect the throttle motor electrical connector, PI33.
	3 Disconnect the ECM electrical connector, EM80.
	4 Measure the resistance between PI33, pin 01 (G) and EM80, pin 80 (G).
	Is the resistance greater than 5 ohms? **Yes** REPAIR the high resistance circuit. For additional information, refer to the wiring diagrams. CLEAR the DTC. TEST the system for normal operation. **No** GO to X2.
X2: CHECK THE THROTTLE MOTOR TO ECM CIRCUIT 2 FOR HIGH RESISTANCE	
	1 Measure the resistance between PI33, pin 02 (R) and EM80, pin 106 (R).
	Is the resistance greater than 5 ohms? **Yes** REPAIR the high resistance circuit. For additional information, refer to the wiring diagrams. CLEAR the DTC. TEST the system for normal operation. **No** GO to X3.
X3: CHECK THE ECM GROUND CIRCUITS	
	1 Measure the resistance between EM80, pins 04 (B), 05 (B), 54 (B) and GROUND.
	Is the resistance greater than 5 ohms? **Yes** REPAIR the high resistance circuit. For additional information, refer to the wiring diagrams. CLEAR the DTC. TEST the system for normal operation. **No** INSTALL a new throttle body. REFER to: Throttle Body (303-04 Fuel Charging and Controls, Removal and Installation). CLEAR the DTC. TEST the system for normal operation.

PINPOINT TEST Y : DTC P1240, P1241, P1242; SENSOR SUPPLY VOLTAGE MALFUNCTION, HIGH/LOW VOLTAGE

• NOTE: The sensor supply circuit includes splices, EMS1, and PIS9. If one sensor has a supply where others do not, check the harness from splices to other sensors for continuity. Refer to the wiring diagrams.

• NOTE: Early production vehicles have wire colour codes that are different from that shown. Use connector pin numbers for wire identification.

TEST CONDITIONS	DETAILS/RESULTS/ACTIONS
Y1: CHECK THE SUPPLY VOLTAGE AT THE APP SENSOR	
	1 Disconnect the APP sensor electrical connector, EM06.
	2 Turn the ignition switch to the ON position.
	3 Measure the voltage between EM06, pin 01 (OY) and GROUND.
	Is the voltage less than 5 volts? **Yes** GO to Y2. **No** GO to Y3.
Y2: CHECK THE APP SENSOR SUPPLY VOLTAGE CIRCUIT FOR HIGH RESISTANCE	
	1 Disconnect the ECM electrical connector, EM80.
	2 Measure the resistance between EM06, pin 01 (OY) and EM80, pin 12 (OY).
	Is the resistance greater than 5 ohms? **Yes** REPAIR the high resistance circuit. For additional information, refer to the wiring diagrams. CLEAR the DTC. TEST the system for normal operation. **No** GO to Y3.
Y3: CHECK THE APP SENSOR SUPPLY VOLTAGE CIRCUIT FOR SHORT TO HIGH VOLTAGE	
	1 Turn the ignition switch to the ON position.
	2 Measure the voltage between EM06, pin 01 (OY) and GROUND.
	Is the voltage greater than 6 volts? **Yes** REPAIR the short circuit to high voltage. For additional information, refer to the wiring diagrams. CLEAR the DTC. TEST the system for normal operation. **No** GO to Y4.
Y4: CHECK THE APP SENSOR SUPPLY VOLTAGE CIRCUIT FOR SHORT TO GROUND	
	1 Turn the ignition switch to the OFF position.
	2 Measure the resistance between EM06, pin 01 (OY) and GROUND.
	Is the resistance less than 10,000 ohms? **Yes** REPAIR the short circuit to GROUND. For additional information, refer to the wiring diagrams. CLEAR the DTC. TEST the system for normal operation. **No** GO to Y5.
Y5: CHECK THE SUPPLY VOLTAGE AT THE TP SENSOR	
	1 Disconnect the throttle position sensor electrical connector, PI06.
	2 Turn the ignition switch to the ON position.
	3 Measure the voltage between PI06, pin 04 (OY) and GROUND.
	Is the voltage less than 5 volts? **Yes** GO to Y6. **No** GO to Y7.
Y6: CHECK THE TP SENSOR SUPPLY VOLTAGE CIRCUIT FOR HIGH RESISTANCE	
	1 Turn the ignition switch to the OFF position.
	2 Disconnect the ECM electrical connector, EM80.
	3 Measure the resistance between PI06, pin 04 (OY) and EM80, pin 12 (OY).
	Is the resistance greater than 5 ohms? **Yes** REPAIR the high resistance circuit. For additional information, refer to the wiring diagrams. CLEAR the DTC. TEST the system for normal operation. **No** GO to Y7.
Y7: CHECK THE TP SENSOR SUPPLY VOLTAGE CIRCUIT FOR SHORT TO HIGH VOLTAGE	
	1 Turn the ignition switch to the ON position.
	2 Measure the voltage between PI06, pin 04 (OY) and GROUND.
	Is the voltage greater than 6 volts? **Yes** REPAIR the short circuit to high voltage. For additional information, refer to the wiring diagrams. CLEAR the DTC. TEST the system for normal operation. **No** GO to Y8.
Y8: CHECK THE TP SENSOR SUPPLY VOLTAGE CIRCUIT FOR SHORT TO GROUND	
	1 Turn the ignition switch to the OFF position.
	2 Measure the resistance between PI06, pin 04 (OY) and GROUND.
	Is the resistance less than 10,000 ohms? **Yes** REPAIR the short circuit to GROUND. For additional information, refer to the wiring diagrams. CLEAR the DTC. TEST the system for normal operation. **No** GO to Y9.
Y9: CHECK THE SUPPLY VOLTAGE AT THE FUEL TANK PRESSURE SENSOR	
	1 Disconnect the fuel tank pressure sensor electrical connector, FT02.
	2 Reconnect the ECM electrical connector, EM80.
	3 Turn the ignition switch to the ON position.
	4 Measure the voltage between FT02, pin 03 (OY) and GROUND.

	Is the voltage less than 5 volts? **Yes** GO to Y10. **No** GO to Y11.
Y10: CHECK THE FUEL TANK PRESSURE SENSOR SUPPLY VOLTAGE CIRCUIT FOR HIGH RESISTANCE	
	1 Disconnect the ECM electrical connector, EM80.
	2 Measure the resistance between FT02, pin 03 (OY) and EM80, pin 12 (OY).
	Is the resistance greater than 5 ohms? **Yes** REPAIR the high resistance circuit. For additional information, refer to the wiring diagrams. CLEAR the DTC. TEST the system for normal operation. **No** GO to Y11.
Y11: CHECK THE FUEL TANK PRESSURE SENSOR SUPPLY VOLTAGE CIRCUIT FOR SHORT TO HIGH VOLTAGE	
	1 Turn the ignition switch to the ON position.
	2 Measure the voltage between FT02, pin 03 (OY) and GROUND.
	Is the voltage greater than 6 volts? **Yes** REPAIR the short circuit to high voltage. For additional information, refer to the wiring diagrams. CLEAR the DTC. TEST the system for normal operation. **No** GO to Y12.
Y12: CHECK THE FUEL TANK PRESSURE SENSOR SUPPLY VOLTAGE CIRCUIT FOR SHORT TO GROUND	
	1 Turn the ignition switch to the OFF position.
	2 Measure the resistance between FT02, pin 03 (OY) and GROUND.
	Is the resistance less than 10,000 ohms? **Yes** REPAIR the short circuit to GROUND. For additional information, refer to the wiring diagrams. CLEAR the DTC. TEST the system for normal operation. **No** GO to Y13.
Y13: CHECK THE SUPPLY VOLTAGE AT THE MANIFOLD ABSOLUTE PRESSURE SENSOR	
	1 Disconnect the MAP sensor electrical connector, PI25.
	2 Reconnect the ECM electrical connector, EM80.
	3 Turn the ignition switch to the ON position.
	4 Measure the voltage between PI25, pin 02 (OY) and GROUND.
	Is the voltage less than 5 volts? **Yes** GO to Y14. **No** GO to Y15.
Y14: CHECK THE MANIFOLD ABSOLUTE PRESSURE SENSOR SUPPLY VOLTAGE CIRCUIT FOR HIGH RESISTANCE	
	1 Disconnect the ECM electrical connector, EM80.
	2 Measure the resistance between PI25, pin 02 (OY) and EM80, pin 12 (OY).
	Is the resistance greater than 5 ohms? **Yes** REPAIR the high resistance circuit. For additional information, refer to the wiring diagrams. CLEAR the DTC. TEST the system for normal operation. **No** GO to Y15.
Y15: CHECK THE MANIFOLD ABSOLUTE PRESSURE SENSOR SUPPLY VOLTAGE CIRCUIT FOR SHORT TO HIGH VOLTAGE	
	1 Turn the ignition switch to the ON position.
	2 Measure the voltage between PI25, pin 02 (OY) and GROUND.
	Is the voltage greater than 6 volts? **Yes** REPAIR the short circuit to high voltage. For additional information, refer to the wiring diagrams. CLEAR the DTC. TEST the system for normal operation. **No** GO to Y16.
Y16: CHECK THE MANIFOLD ABSOLUTE PRESSURE SENSOR SUPPLY VOLTAGE CIRCUIT FOR SHORT TO GROUND	
	1 Turn the ignition switch to the OFF position.
	2 Measure the resistance between PI25, pin 02 (OY) and GROUND.
	Is the resistance less than 10,000 ohms? **Yes** REPAIR the short circuit to GROUND. For additional information, refer to the wiring diagrams. CLEAR the DTC. TEST the system for normal operation. **No** GO to Y17.
Y17: CHECK THE SUPPLY VOLTAGE AT THE INJECTION PRESSURE SENSOR	
	1 Disconnect the IP sensor electrical connector, PI43.
	2 Reconnect the ECM electrical connector, EM80.
	3 Turn the ignition switch to the ON position.
	4 Measure the voltage between PI43, pin 01 (OY) and GROUND.
	Is the voltage less than 5 volts? **Yes** GO to Y18. **No** GO to Y19.
Y18: CHECK THE INJECTION PRESSURE SENSOR SUPPLY VOLTAGE CIRCUIT FOR HIGH RESISTANCE	
	1 Disconnect the ECM electrical connector, EM80.
	2 Measure the resistance between PI43, pin 01 (OY) and EM80, pin 12 (OY).

	Is the resistance greater than 5 ohms? **Yes** REPAIR the high resistance circuit. For additional information, refer to the wiring diagrams. CLEAR the DTC. TEST the system for normal operation. **No** GO to Y19.
Y19: CHECK THE INJECTION PRESSURE SENSOR SUPPLY VOLTAGE CIRCUIT FOR SHORT TO HIGH VOLTAGE	
	1 Turn the ignition switch to the ON position.
	2 Measure the voltage between PI25, pin 02 (OY) and GROUND.
	Is the voltage greater than 6 volts? **Yes** REPAIR the short circuit to high voltage. For additional information, refer to the wiring diagrams. CLEAR the DTC. TEST the system for normal operation. **No** GO to Y20.
Y20: CHECK THE INJECTION PRESSURE SENSOR SUPPLY VOLTAGE CIRCUIT FOR SHORT TO GROUND	
	1 Turn the ignition switch to the OFF position.
	2 Measure the resistance between PI25, pin 02 (OY) and GROUND.
	Is the resistance less than 10,000 ohms? **Yes** REPAIR the short circuit to GROUND. For additional information, refer to the wiring diagrams. CLEAR the DTC. TEST the system for normal operation. **No** Check for DTCs relating to individual sensors, and/or sensor GROUND. Carry out pinpoint tests for sensors indicated.

PINPOINT TEST Z : DTC P1243; SENSOR GROUND CIRCUITS OPEN CIRCUIT

• NOTE: The sensor ground circuit includes splices, EMS2, and PIS1. If one sensor has a ground where others do not, check the harness from splices to other sensors for continuity. Refer to the wiring diagrams.

• NOTE: Early production vehicles have wire colour codes that are different from that shown. Use connector pin numbers for wire identification.

TEST CONDITIONS	DETAILS/RESULTS/ACTIONS
Z1: CHECK THE SENSOR GROUND AT THE THROTTLE SENSORS	
	1 Disconnect the throttle sensor electrical connector, PI06.
	2 Measure the resistance between PI06, pin 01 (BG) and GROUND.
	Is the resistance greater than 5 ohms? **Yes** GO to Z2. **No** GO to Z3.
Z2: CHECK THE THROTTLE SENSOR GROUND CIRCUIT FOR HIGH RESISTANCE	
	1 Disconnect the ECM electrical connector, EM80.
	2 Measure the resistance between PI06, pin 01 (BG) and EM80, pin 19 (BG).
	Is the resistance greater than 5 ohms? **Yes** REPAIR the high resistance circuit. For additional information, refer to the wiring diagrams. CLEAR the DTC. TEST the system for normal operation. **No** GO to Z3.
Z3: CHECK THE SENSOR GROUND AT THE APP SENSOR	
	1 Disconnect the APP sensor electrical connector, EM06.
	2 Reconnect the ECM electrical connector, EM80.
	3 Measure the resistance between EM06, pin 06 (BG) and GROUND.
	Is the resistance greater than 5 ohms? **Yes** GO to Z4. **No** GO to Z5.
Z4: CHECK THE APP SENSOR GROUND CIRCUIT FOR HIGH RESISTANCE	
	1 Disconnect the ECM electrical connector, EM80.
	2 Measure the resistance between EM06, pin 06 (BG) and EM80, pin 19 (BG).
	Is the resistance greater than 5 ohms? **Yes** REPAIR the high resistance circuit. For additional information, refer to the wiring diagrams. CLEAR the DTC. TEST the system for normal operation. **No** GO to Z5.
Z5: CHECK THE SENSOR GROUND AT THE FUEL TANK PRESSURE SENSOR	
	1 Disconnect the FTP sensor electrical connector, FT02.
	2 Reconnect the ECM electrical connector, EM80.
	3 Measure the resistance between FT02, pin 01 (BG) and GROUND.
	Is the resistance greater than 5 ohms? **Yes** GO to Z6. **No** GO to Z7.
Z6: CHECK THE FUEL TANK PRESSURE SENSOR GROUND CIRCUIT FOR HIGH RESISTANCE	
	1 Disconnect the ECM electrical connector, EM80.
	2 Measure the resistance between FT02, pin 01 (BG) and EM80, pin 19 (BG).
	Is the resistance greater than 5 ohms? **Yes** REPAIR the high resistance circuit. For additional information, refer to the wiring diagrams. CLEAR the DTC. TEST the system for normal operation. **No** GO to Z7.
Z7: CHECK THE SENSOR GROUND AT THE ECT SENSOR	

	1 Reconnect the ECM electrical connector, EM80.
	2 Disconnect the ECT sensor electrical connector, PI04.
	3 Measure the resistance between PI04, pin 01 (BG) and GROUND.
	Is the resistance greater than 5 ohms? **Yes** GO to Z8. **No** GO to Z9.
Z8: CHECK THE ECT SENSOR GROUND CIRCUIT FOR HIGH RESISTANCE	
	1 Disconnect the ECM electrical connector, EM80.
	2 Measure the resistance between PI04, pin 01 (BG) and EM80, pin 19 (BG).
	Is the resistance greater than 5 ohms? **Yes** REPAIR the high resistance circuit. For additional information, refer to the wiring diagrams. CLEAR the DTC. TEST the system for normal operation. **No** GO to Z9.
Z9: CHECK THE SENSOR GROUND AT THE IAT SENSOR (MAF)	
	1 Disconnect the IAT sensor (MAF) PI35.
	2 Reconnect the ECM electrical connector, EM80.
	3 Measure the resistance between PI35, pin 05 (BG) and GROUND.
	Is the resistance greater than 5 ohms? **Yes** GO to Z10. **No** GO to Z11.
Z10: CHECK THE IAT SENSOR GROUND CIRCUIT FOR HIGH RESISTANCE	
	1 Disconnect the ECM electrical connector, EM80.
	2 Measure the resistance between PI35, pin 05 (BG) and EM80, pin 19 (BG).
	Is the resistance greater than 5 ohms? **Yes** REPAIR the high resistance circuit. For additional information, refer to the wiring diagrams. CLEAR the DTC. TEST the system for normal operation. **No** GO to Z11.
Z11: CHECK THE SENSOR GROUND AT THE IAT 2 SENSOR	
	1 Disconnect the IAT 2 sensor electrical connector, PI03.
	2 Reconnect the ECM electrical connector, EM80.
	3 Measure the resistance between PI03, pin 02 (BG) and GROUND.
	Is the resistance greater than 5 ohms? **Yes** GO to Z12. **No** GO to Z13.
Z12: CHECK THE IAT 2 SENSOR GROUND CIRCUIT FOR HIGH RESISTANCE	
	1 Disconnect the ECM electrical connector, EM80.
	2 Measure the resistance between PI03, pin 02 (BG) and EM80, pin 19 (BG).
	Is the resistance greater than 5 ohms? **Yes** REPAIR the high resistance circuit. For additional information, refer to the wiring diagrams. CLEAR the DTC. TEST the system for normal operation. **No** GO to Z13.
Z13: CHECK THE SENSOR GROUND AT THE MAP SENSOR	
	1 Disconnect the MAP sensor electrical connector, PI25.
	2 Reconnect the ECM electrical connector, EM80.
	3 Measure the resistance between PI25, pin 04 (BG) and GROUND.
	Is the resistance greater than 5 ohms? **Yes** GO to Z14. **No** GO to Z15.
Z14: CHECK THE MAP SENSOR GROUND CIRCUIT FOR HIGH RESISTANCE	
	1 Disconnect the ECM electrical connector, EM80.
	2 Measure the resistance between PI25, pin 04 (BG) and EM80, pin 19 (BG).
	Is the resistance greater than 5 ohms? **Yes** REPAIR the high resistance circuit. For additional information, refer to the wiring diagrams. CLEAR the DTC. TEST the system for normal operation. **No** GO to Z15.
Z15: CHECK THE SENSOR GROUND AT THE EFT SENSOR	
	1 Disconnect the EFT sensor electrical connector, PI24.
	2 Reconnect the ECM electrical connector, EM80.
	3 Measure the resistance between PI24, pin 02 (BG) and GROUND.
	Is the resistance greater than 5 ohms? **Yes** GO to Z16. **No** GO to Z17.
Z16: CHECK THE EFT SENSOR GROUND CIRCUIT FOR HIGH RESISTANCE	
	1 Disconnect the ECM electrical connector, EM80.
	2 Measure the resistance between PI24, pin 02 (BG) and EM80, pin 19 (BG).

	Is the resistance greater than 5 ohms? **Yes** REPAIR the high resistance circuit. For additional information, refer to the wiring diagrams. CLEAR the DTC. TEST the system for normal operation. **No** GO to Z17.
Z17: CHECK THE SENSOR GROUND AT THE IP SENSOR	
	1 Disconnect the IP sensor electrical connector, PI43.
	2 Reconnect the ECM electrical connector, EM80.
	3 Measure the resistance between PI43, pin 02 (BG) and GROUND.
	Is the resistance greater than 5 ohms? **Yes** GO to Z18. **No** GO to Z19.
Z18: CHECK THE IP SENSOR GROUND CIRCUIT FOR HIGH RESISTANCE	
	1 Disconnect the ECM electrical connector, EM80.
	2 Measure the resistance between PI43, pin 02 (BG) and EM80, pin 19 (BG).
	Is the resistance greater than 5 ohms? **Yes** REPAIR the high resistance circuit. For additional information, refer to the wiring diagrams. CLEAR the DTC. TEST the system for normal operation. **No** GO to Z19.
Z19: CHECK THE SENSOR GROUND AT THE EOT SENSOR	
	1 Disconnect the EOT sensor electrical connector, PI38.
	2 Reconnect the ECM electrical connector, EM80.
	3 Measure the resistance between PI38, pin 02 (BG) and GROUND.
	Is the resistance greater than 5 ohms? **Yes** GO to Z20. **No** Check for DTCs relating to individual sensors. Carry out pinpoint tests for sensors indicated.
Z20: CHECK THE IP SENSOR GROUND CIRCUIT FOR HIGH RESISTANCE	
	1 Disconnect the ECM electrical connector, EM80.
	2 Measure the resistance between PI38, pin 02 (BG) and EM80, pin 19 (BG).
	Is the resistance greater than 5 ohms? **Yes** REPAIR the high resistance circuit. For additional information, refer to the wiring diagrams. CLEAR the DTC. TEST the system for normal operation. **No** GO to Z21.
Z21: CHECK THE SENSOR GROUND AT THE A/C PRESSURE SENSOR	
	1 Disconnect the A/C pressure sensor electrical connector, PI38.
	2 Reconnect the ECM electrical connector, EM80.
	3 Measure the resistance between LF20, pin 01 (BG) and GROUND.
	Is the resistance greater than 5 ohms? **Yes** GO to Z22. **No** Check for DTCs relating to individual sensors. Carry out pinpoint tests for sensors indicated.
Z22: CHECK THE A/C PRESSURE SENSOR GROUND CIRCUIT FOR HIGH RESISTANCE	
	1 Disconnect the ECM electrical connector, EM80.
	2 Measure the resistance between PI38, pin 02 (BG) and EM80, pin 19 (BG).
	Is the resistance greater than 5 ohms? **Yes** REPAIR the high resistance circuit. For additional information, refer to the wiring diagrams. CLEAR the DTC. TEST the system for normal operation. **No** Check for DTCs relating to individual sensors. Carry out pinpoint tests for sensors indicated.

PINPOINT TEST AA : DTC P1245, P1246; ENGINE CRANK SIGNAL LOW/HIGH VOLTAGE	
TEST CONDITIONS	**DETAILS/RESULTS/ACTIONS**
AA1: CHECK THE BPM TO ECM CIRCUIT FOR HIGH RESISTANCE	
	1 Disconnect the battery negative terminal.
	2 Disconnect the BPM electrical connector, FC14.
	3 Disconnect the ECM electrical connector, EM80.
	4 Measure the resistance between FC14, pin 72 (GO) and EM80, pin 06 (GO).
	Is the resistance greater than 5 ohms? **Yes** REPAIR the high resistance circuit. For additional information, refer to the wiring diagrams. CLEAR the DTC. TEST the system for normal operation. **No** GO to AA2.
AA2: CHECK THE BPM TO ECM CIRCUIT FOR SHORT TO HIGH VOLTAGE	
	1 Reconnect the battery negative terminal.
	2 Turn the ignition switch to the ON position.
	3 Measure the voltage between FC14, pin 72 (GO) and GROUND.
	Is the voltage greater than 3 volts? **Yes** REPAIR the short circuit. For additional information, refer to the wiring diagrams. CLEAR the DTC. TEST the system for normal operation. **No** GO to AA3.
AA3: CHECK THE IGNITION SWITCH TO BPM SWITCHED GROUND CIRCUIT FOR HIGH RESISTANCE	

	1 Reconnect the battery negative terminal.
	2 Disconnect the ignition switch electrical connector, FC04.
	3 Measure the resistance between FC04, pin 01 (GO) and FC14, pin 41 (GO).
	Is the resistance greater than 5 ohms? **Yes** REPAIR the high resistance circuit. For additional information, refer to the wiring diagrams. CLEAR the DTC. TEST the system for normal operation. **No** Check the starter system. REFER to: Starting System (303-06 Starting System, Diagnosis and Testing).

PINPOINT TEST AB : DTC P1340*, P1341*; LEFT-HAND CAMSHAFT POSITION (CMP) SENSOR CIRCUIT MALFUNCTION RANGE/PERFORMANCE	
• NOTE: *P0345, P0346 For early production vehicles.	
TEST CONDITIONS	**DETAILS/RESULTS/ACTIONS**
AB1: CHECK THE CMP SENSOR FOR CORRECT INSTALLATION	
	1 Check the CMP sensor for correct installation.
	Is the CMP sensor correctly installed? **Yes** GO to AB2. **No** INSTALL the CMP sensor correctly. REFER to: Camshaft Position (CMP) Sensor RH (303-14 Electronic Engine Controls, Removal and Installation). CLEAR the DTCs. TEST the system for normal operation.
AB2: CHECK THE CMP SENSOR FOR FOREIGN DEBRIS	
	1 Remove the CMP sensor and inspect for foreign debris.
	Is the CMP sensor free of foreign debris? **Yes** GO to AB3. **No** CLEAN the sensor and wheel. INSTALL the sensor. REFER to: Camshaft Position (CMP) Sensor RH (303-14 Electronic Engine Controls, Removal and Installation). CLEAR the DTCs. TEST the system for normal operation.
AB3: CHECK THE CMP SENSOR SENSING CIRCUIT FOR HIGH RESISTANCE	
	1 Disconnect the battery negative terminal.
	2 Disconnect the CMP sensor electrical connector, PI15.
	3 Disconnect the ECM electrical connector, EM80.
	4 Measure the resistance between EM80, pin 68 (B) and PI15, pin 01 (B).
	Is the resistance greater than 5 ohms? **Yes** REPAIR the high resistance circuit. For additional information, refer to the wiring diagrams. CLEAR the DTC. TEST the system for normal operation. **No** GO to AB4.
AB4: CHECK THE CMP SENSOR SENSING CIRCUIT FOR SHORT TO HIGH VOLTAGE	
	1 Reconnect the battery negative terminal.
	2 Turn the ignition switch to the ON position.
	3 Measure the voltage between EM80, pin 68 (B) and GROUND.
	Is the voltage greater than 3 volts? **Yes** REPAIR the short circuit to high voltage. For additional information, refer to the wiring diagrams. CLEAR the DTC. TEST the system for normal operation. **No** GO to AB5.
AB5: CHECK THE CMP SENSOR SENSING CIRCUIT FOR SHORT TO GROUND	
	1 Turn the ignition switch to the OFF position.
	2 Measure the resistance between PI15, pin 01 (B) and GROUND.
	Is the resistance less than 10,000 ohms? **Yes** REPAIR the short circuit to GROUND. For additional information, refer to the wiring diagrams. CLEAR the DTC. TEST the system for normal operation. **No** INSTALL a new CMP sensor. REFER to: Camshaft Position (CMP) Sensor RH (303-14 Electronic Engine Controls, Removal and Installation). CLEAR the DTC. TEST the system for normal operation.

PINPOINT TEST AC : DTC P0010, P1384; RIGHT-HAND VARIABLE CAMSHAFT TIMING (VCT) OIL CONTROL SOLENOID MALFUNCTION, CIRCUIT MALFUNCTION	
TEST CONDITIONS	**DETAILS/RESULTS/ACTIONS**
AC1: CHECK ECM TO VCT SOLENOID PWM CIRCUIT FOR HIGH RESISTANCE	
	1 Disconnect the battery negative terminal.
	2 Disconnect the VCT electrical connector, PI31.
	3 Disconnect the ECM electrical connector, EM80.
	4 Measure the resistance between PI31, pin 01 (OY) and EM80, pin 109 (OY).
	Is the resistance greater than 5 ohms? **Yes** REPAIR the high resistance circuit. For additional information, refer to the wiring diagrams. CLEAR the DTC. TEST the system for normal operation. **No** GO to AC2.
AC2: CHECK ECM TO VCT SOLENOID PWM CIRCUIT FOR SHORT TO HIGH VOLTAGE	
	1 Reconnect the battery negative terminal.
	2 Turn the ignition switch to the ON position.

	3 Measure the voltage between PI31, pin 01 (OY) and GROUND.
	Is the voltage greater than 3 volts? **Yes** REPAIR the short circuit to high voltage. For additional information, refer to the wiring diagrams. CLEAR the DTC. TEST the system for normal operation. **No** GO to AC2.
AC3: CHECK ECM TO VCT SOLENOID PWM CIRCUIT FOR SHORT TO GROUND	
	1 Turn the ignition switch to the OFF position.
	2 Measure the resistance between PI31, pin 01 (OY) and GROUND.
	Is the resistance less than 10,000 ohms? **Yes** REPAIR the short circuit to GROUND. For additional information, refer to the wiring diagrams. CLEAR the DTC. TEST the system for normal operation. **No** GO to AC4.
AC4: CHECK VCT SOLENOID GROUND	
	1 Measure the resistance between PI31, pin 02 and GROUND.
	Is the resistance greater than 5 ohms? **Yes** REPAIR the high resistance circuit. For additional information, refer to the wiring diagrams. CLEAR the DTC. TEST the system for normal operation. **No** INSTALL a new VCT solenoid. REFER to: Variable Camshaft Timing (VCT) Oil Control Solenoid (303-14 Electronic Engine Controls, Removal and Installation). CLEAR the DTC. TEST the system for normal operation.

PINPOINT TEST AD : DTC P1396; LEFT-HAND VARIABLE CAMSHAFT TIMING (VCT) OIL CONTROL SOLENOID MALFUNCTION, CIRCUIT MALFUNCTION

TEST CONDITIONS	DETAILS/RESULTS/ACTIONS
AD1: CHECK ECM TO VCT SOLENOID PWM CIRCUIT FOR HIGH RESISTANCE	
	1 Disconnect the battery negative terminal.
	2 Disconnect the VCT electrical connector, PI32.
	3 Disconnect the ECM electrical connector, EM80.
	4 Measure the resistance between PI32, pin 01 (OG) and EM80, pin 110 (OG).
	Is the resistance greater than 5 ohms? **Yes** REPAIR the high resistance circuit. For additional information, refer to the wiring diagrams. CLEAR the DTC. TEST the system for normal operation. **No** GO to AD2.
AD2: CHECK ECM TO VCT SOLENOID PWM CIRCUIT FOR SHORT TO HIGH VOLTAGE	
	1 Reconnect the battery negative terminal.
	2 Turn the ignition switch to the ON position.
	3 Measure the voltage between PI32, pin 01 (OG) and GROUND.
	Is the voltage greater than 3 volts? **Yes** REPAIR the short circuit to high voltage. For additional information, refer to the wiring diagrams. CLEAR the DTC. TEST the system for normal operation. **No** GO to AD3.
AD3: CHECK ECM TO VCT SOLENOID PWM CIRCUIT FOR SHORT TO GROUND	
	1 Turn the ignition switch to the OFF position.
	2 Measure the resistance between PI32, pin 01 (OG) and GROUND.
	Is the resistance less than 10,000 ohms? **Yes** REPAIR the short circuit to GROUND. For additional information, refer to the wiring diagrams. CLEAR the DTC. TEST the system for normal operation. **No** GO to AD4.
AD4: CHECK VCT SOLENOID GROUND	
	1 Disconnect the battery negative terminal.
	2 Measure the resistance between PI32, pin 02 (RG) and GROUND.
	Is the resistance greater than 5 ohms? **Yes** REPAIR the high resistance circuit. For additional information, refer to the wiring diagrams. CLEAR the DTC. TEST the system for normal operation. **No** INSTALL a new VCT solenoid. REFER to: Variable Camshaft Timing (VCT) Oil Control Solenoid (303-14 Electronic Engine Controls, Removal and Installation). CLEAR the DTC. TEST the system for normal operation.

PINPOINT TEST AE : DTC P1582; "FLIGHT RECORDER" DATA IS STORED IF ANY ONE OF FIVE CONDITIONS OCCUR

• NOTE: See DTC index for list of five conditions.

TEST CONDITIONS	DETAILS/RESULTS/ACTIONS
AE1: CHECK THE INERTIA SWITCH TO ECM CIRCUIT FOR SHORT CIRCUIT TO B+ VOLTAGE	
	1 Make sure the inertia switch is not tripped.
	2 Disconnect the inertia switch electrical connector, AC10.
	3 Disconnect the ECM electrical connector, EM80.
	4 Measure the voltage between EM80, pin 10 (GU) and GROUND.

	Is the voltage greater than 3 volts? **Yes** REPAIR the short circuit to B+. For additional information, refer to the wiring diagrams. CLEAR the DTC. TEST the system for normal operation. **No** INSTALL a new inertia switch. CLEAR the DTC. TEST the system for normal operation.

PINPOINT TEST AF : DTC P1606; EMS CONTROL RELAY MALFUNCTION	
• NOTE: Before commencing this test, check the date codes on the relay. If the date is between R6 k1 and R6 k8, change the relay.	
TEST CONDITIONS	**DETAILS/RESULTS/ACTIONS**
AF1: CHECK THE EMS RELAY PERMANENT B+ SUPPLY	
	1 Remove the EMS relay.
	2 Measure the voltage between the relay base, pins 02 and 03 and GROUND.
	Are both voltages greater than 10 volts? **Yes** GO to AF3. **No** REPAIR the circuit between the relay base and battery. This circuit includes the high power protection module. For additional information, refer to the wiring diagrams. CLEAR the DTC. TEST the system for normal operation.
AF2: CHECK THE EMS RELAY TO ECM CIRCUIT FOR HIGH RESISTANCE	
	1 Disconnect the battery negative terminal.
	2 Disconnect the ECM electrical connector, EM80.
	3 Measure the resistance between the relay base, pin 05 and EM80, pins 23 (WR) and 24 (WR).
	Is either resistance greater than 5 ohms? **Yes** REPAIR the high resistance circuit. For additional information, refer to the wiring diagrams. CLEAR the DTC. TEST the system for normal operation. **No** GO to AF3.
AF3: CHECK THE ECM TO EMS RELAY CONTROL CIRCUIT FOR HIGH RESISTANCE	
	1 Disconnect the battery negative terminal.
	2 Disconnect the ECM electrical connector, EM80.
	3 Measure the resistance between the relay base, pin 01 and EM80, pin 40 (U).
	Is the resistance greater than 5 ohms? **Yes** REPAIR the high resistance circuit. For additional information, refer to the wiring diagrams. CLEAR the DTC. TEST the system for normal operation. **No** INSTALL a new EMS relay. CLEAR the DTC. TEST the system for normal operation.

PINPOINT TEST AG : P0105, P1107, P1108; MANIFOLD ABSOLUTE PRESSURE (MAP) SENSOR SENSING CIRCUIT MALFUNCTION, HIGH/LOW VOLTAGE	
• NOTE: For sensor ground tests, GO to Pinpoint Test Z.	
TEST CONDITIONS	**DETAILS/RESULTS/ACTIONS**
AG1: CHECK THE MAP SENSOR SENSING CIRCUIT FOR HIGH RESISTANCE	
	1 Disconnect the battery negative terminal.
	2 Disconnect the MAP sensor electrical connector, PI25.
	3 Disconnect the ECM electrical connector, EM80.
	4 Measure the resistance between PI25, pin 01 (Y) and EM80, pin 127 (Y).
	Is the resistance greater than 5 ohms? **Yes** REPAIR the high resistance circuit. For additional information, refer to the wiring diagrams. CLEAR the DTC. TEST the system for normal operation. **No** GO to AG2.
AG2: CHECK THE MAP SENSOR SENSING CIRCUITFOR SHORT TO HIGH VOLTAGE	
	1 Reconnect the battery negative terminal.
	2 Measure the voltage between PI25, pin 01 (Y) and GROUND.
	Is the voltage greater than 3 volts? **Yes** REPAIR the short to high voltage. For additional information, refer to the wiring diagrams. CLEAR the DTC. TEST the system for normal operation. **No** GO to AG3.
AG3: CHECK THE MAP SENSOR SENSING CIRCUIT FOR SHORT TO GROUND	
	1 Measure the resistance between PI25, pin 01 (Y) and GROUND.
	Is the resistance less than 10,000 ohms? **Yes** REPAIR the short to GROUND. For additional information, refer to the wiring diagrams. CLEAR the DTC. TEST the system for normal operation. **No** INSTALL a new MAP sensor. REFER to: Manifold Absolute Pressure (MAP) Sensor (303-14 Electronic Engine Controls, Removal and Installation). CLEAR the DTC. TEST the system for normal operation. If the DTC is repeated, contact Dealer technical support for advice on possible ECM failure.

PINPOINT TEST AH : DTC P1112, P1113; INTAKE AIR TEMPERATURE (IAT) SENSOR 2 SENSING CIRCUIT HIGH/LOW VOLTAGE	
• NOTE: For sensor ground tests, GO to Pinpoint Test Z.	
TEST CONDITIONS	**DETAILS/RESULTS/ACTIONS**
AH1: CHECK IAT SENSOR 2 SENSING CIRCUIT FOR HIGH RESISTANCE	
	1 Disconnect the battery negative terminal.

	2 Disconnect the IAT sensor 2 electrical connector, PI03.
	3 Disconnect the ECM electrical connector, EM80.
	4 Measure the resistance between PI03, pin 01 (YG) and EM80, pin 72 (YG).
	Is the resistance greater than 5 ohms? **Yes** REPAIR the high resistance circuit. For additional information, refer to the wiring diagrams. CLEAR the DTC. TEST the system for normal operation. **No** GO to AH2.
AH2: CHECK IAT SENSOR 2 SENSING CIRCUIT FOR SHORT TO HIGH VOLTAGE	
	1 Reconnect the battery negative terminal.
	2 Turn the ignition switch to the ON position.
	3 Measure the voltage between PI03, pin 01 (YG) and GROUND.
	Is the voltage greater than 3 volts? **Yes** REPAIR the short circuit to high voltage. For additional information, refer to the wiring diagrams. CLEAR the DTC. TEST the system for normal operation. **No** GO to AH3.
AH3: CHECK IAT SENSOR 2 SENSING CIRCUIT FOR SHORT TO GROUND	
	1 Turn the ignition switch to the OFF position.
	2 Measure the resistance between PI03, pin 01 (YG) and GROUND.
	Is the resistance less than 10,000 ohms? **Yes** REPAIR the short circuit to GROUND. For additional information, refer to the wiring diagrams. CLEAR the DTC. TEST the system for normal operation. **No** INSTALL a new IATS 2. REFER to: Intake Air Temperature (IAT) Sensor (303-14 Electronic Engine Controls, Removal and Installation). CLEAR the DTC. TEST the system for normal operation.

PINPOINT TEST AI : DTC P0181, P0182, P0183; ENGINE FUEL TEMPERATURE (EFT) SENSOR RANGE/PERFORMANCE, LOW/HIGH VOLTAGE

• NOTE: For sensor ground tests, GO to Pinpoint Test Z.

TEST CONDITIONS	DETAILS/RESULTS/ACTIONS
AI1: CHECK THE EFT SENSOR SENSING CIRCUIT FOR HIGH RESISTANCE	
	1 Disconnect the battery negative terminal.
	2 Disconnect the EFT sensor electrical connector, PI24.
	3 Disconnect the ECM electrical connector, EM80.
	4 Measure the resistance between PI24, pin 01 (YG) and EM80, pin 50 (YG).
	Is the resistance greater than 5 ohms? **Yes** REPAIR the high resistance circuit. For additional information, refer to the wiring diagrams. CLEAR the DTC. TEST the system for normal operation. **No** GO to AI2.
AI2: CHECK THE EFT SENSOR SENSING CIRCUIT FOR SHORT TO HIGH VOLTAGE	
	1 Reconnect the battery negative terminal.
	2 Turn the ignition switch to the ON position.
	3 Measure the voltage between PI24, pin 01 (YG) and GROUND.
	Is the voltage greater than 3 volts? **Yes** REPAIR the short circuit to high voltage. For additional information, refer to the wiring diagrams. CLEAR the DTC. TEST the system for normal operation. **No** GO to AI3.
AI3: CHECK THE EFT SENSOR SENSING CIRCUIT FOR SHORT TO GROUND	
	1 Turn the ignition switch to the OFF position.
	2 Measure the resistance between PI24, pin 01 (YG) and GROUND.
	Is the resistance less than 10,000 ohms? **Yes** REPAIR the short circuit to GROUND. For additional information, refer to the wiring diagrams. CLEAR the DTC. TEST the system for normal operation. **No** INSTALL a new EFT sensor. REFER to: Fuel Temperature Sensor (303-14 Electronic Engine Controls, Removal and Installation). CLEAR the DTC. TEST the system for normal operation.

PINPOINT TEST AJ : DTC P0532, P0533; AIR CONDITIONING PRESSURE SENSOR CIRCUIT LOW/HIGH VOLTAGE

• NOTE: For sensor supply tests, GO to Pinpoint Test Y.

• NOTE: For sensor ground tests, GO to Pinpoint Test Z.

TEST CONDITIONS	DETAILS/RESULTS/ACTIONS
AJ1: CHECK THE A/C PRESSURE SENSOR SENSING CIRCUIT FOR HIGH RESISTANCE	
	1 Disconnect the battery negative terminal.
	2 Disconnect the A/C pressure sensor electrical connector, LF20.
	3 Disconnect the ECM electrical connector, EM80.
	4 Measure the resistance between LF20, pin 03 (WU) and EM80, pin 121 (WU).
	Is the resistance greater than 5 ohms? **Yes** REPAIR the high resistance circuit. For additional information, refer to the wiring diagrams. CLEAR the DTC. TEST the system for normal operation. **No** GO to AJ2.

AJ2: CHECK THE A/C PRESSURE SENSOR SENSING CIRCUIT FOR SHORT TO HIGH VOLTAGE	
	1 Reconnect the battery negative terminal.
	2 Turn the ignition switch to the ON position.
	3 Measure the voltage between LF20, pin 03 (WU) and GROUND.
	Is the voltage greater than 3 volts? **Yes** REPAIR the short circuit to high voltage. For additional information, refer to the wiring diagrams. CLEAR the DTC. TEST the system for normal operation. **No** GO to AJ3.
AJ3: CHECK THE A/C PRESSURE SENSOR SENSING CIRCUIT FOR SHORT TO GROUND	
	1 Turn the ignition switch to the OFF position.
	2 Measure the resistance between LF20, pin 03 (WU) and GROUND.
	Is the resistance less than 10,000 ohms? **Yes** REPAIR the short circuit to GROUND. For additional information, refer to the wiring diagrams. CLEAR the DTC. TEST the system for normal operation. **No** INSTALL a new A/C pressure sensor. REFER to: Pressure Cutoff Switch (412-03 Air Conditioning, Removal and Installation).

PINPOINT TEST AK : DTC P1410; AIR CLEANER SOLENOID VALVE DRIVE CIRCUIT MALFUNCTION	
TEST CONDITIONS	**DETAILS/RESULTS/ACTIONS**
AK1: CHECK THE POWER SUPPLY TO THE AIR CLEANER SOLENOID VALVE	
	1 Disconnect the air cleaner solenoid valve electrical connector, LF13.
	2 Turn the ignition switch to the ON position.
	3 Measure the voltage between LF13, pin 01 (WU) and GROUND.
	Is the voltage greater than 10 volts? **Yes** GO to AK2. **No** REPAIR the circuit between the air cleaner solenoid valve and battery. This circuit includes fuse 14 of the EMS fuse box, the EMS relay, and the high power protection module. For additional information, refer to the wiring diagrams. CLEAR the DTC. TEST the system for normal operation.
AK2: CHECK THE AIR CLEANER SOLENOID VALVE TO ECM CIRCUIT FOR HIGH RESISTANCE	
	1 Turn the ignition switch to the OFF position.
	2 Disconnect the battery negative terminal.
	3 Disconnect the ECM electrical connector, EM80.
	4 Measure the resistance between L13, pin 02 (OG) and EM80, pin 14 (OG).
	Is the resistance greater than 5 ohms? **Yes** REPAIR the high resistance circuit. For additional information, refer to the wiring diagrams. CLEAR the DTC. TEST the system for normal operation. **No** GO to AK3.
AK3: CHECK THE AIR CLEANER SOLENOID VALVE TO ECM CIRCUIT FOR SHORT TO HIGH VOLTAGE	
	1 Reconnect the battery negative terminal.
	2 Turn the ignition switch to the ON position.
	3 Measure the voltage between LF13, pin 02 (OG) and GROUND.
	Is the voltage greater than 3 volts? **Yes** REPAIR the short circuit to high voltage. For additional information, refer to the wiring diagrams. CLEAR the DTC. TEST the system for normal operation. **No** GO to AK4.
AK4: CHECK THE AIR CLEANER SOLENOID VALVE TO ECM CIRCUIT FOR SHORT TO GROUND	
	1 Turn the ignition switch to the OFF position.
	2 Measure the resistance between LF13, pin 02 (OG) and GROUND.
	Is the resistance less than 10,000 ohms? **Yes** REPAIR the short circuit to GROUND. For additional information, refer to the wiring diagrams. CLEAR the DTC. TEST the system for normal operation. **No** INSTALL a new air cleaner solenoid valve. REFER to: Air Cleaner (303-12 Intake Air Distribution and Filtering, Removal and Installation). CLEAR the DTC. TEST the system for normal operation.

PINPOINT TEST AL : DTC P1474; CHECK INTERCOOLER COOLANT PUMP FUNCTION	
TEST CONDITIONS	**DETAILS/RESULTS/ACTIONS**
AL1: CHECK POWER SUPPLY TO INTERCOOLER COOLANT PUMP	
	1 Disconnect the intercooler coolant pump electrical connector, EM75.
	2 Turn the ignition switch to the ON position.
	3 Make sure the EMS relay is energised.
	4 Measure the voltage between EM75, pin 02 (NW) and GROUND.
	Is the voltage less than 10 volts? **Yes** REPAIR the circuit between EM75, pin 02 and battery. This circuit includes the EMS fuse box, (fuse 12) the EMS relay, and the high power protection module. For additional information, refer to the wiring diagrams. CLEAR the DTC. TEST the system for normal operation. **No** GO to AL2.
AL2: CHECK THE INTERCOOLER COOLANT PUMP GROUND	
	1 Measure the resistance between EM75, pin 01 (B) and GROUND.

	Is the resistance greater than 5 ohms? **Yes** REPAIR the high resistance circuit. For additional information, refer to the wiring diagrams. TEST the system for normal operation. **No** INSTALL a new intercooler coolant pump. REFER to: Water Pump (303-03B Supercharger Cooling, Removal and Installation). CLEAR the DTC. TEST the system for normal operation.

Published: 11-May-2011

Electronic Engine Controls - Powertrain Control Module (PCM) Long Drive Cycle Self-Test

General Procedures

WARNING: Where possible, all road tests should be on well surfaced and dry roads. Always comply with speed limits and local traffic regulations.

• NOTE: This procedure is an overcheck only. If fault codes are found, interrogation of the relevant system must be carried out and claimed against.

• NOTE: The vehicle must exceed 50mph (80 km/h) during the road test.

1. Connect the diagnostic equipment to the vehicle.

2. Follow on screen prompts and check for engine management fault codes.

3. Clear the fault codes following the on screen procedure.

4. Disconnect the diagnostic equipment from the vehicle.

5. NOTE: Make sure cruise control is not engaged.

Make sure the engine temperature is above 60 ºC (140 ºF).

Carry out a road test and perform the following operations.

1. Accelerate to 55 mph (88 km/h) in 5th gear and cruise for 2 minutes with the engine speed at or above 1800rpm.
2. Lift off the throttle and allow the vehicle to decelerate until the engine speed is less than 1000 rpm.
3. Stop the vehicle.
4. Release brake, allow the vehicle to move with no throttle for 1 minute.
5. Road test is now complete.

6. Connect the diagnostic equipment to the vehicle.

7. NOTE: If fault codes are found, interrogation of the relevant system must be carried out and claimed against.

Follow on screen prompts and check for engine management fault codes.

8. Disconnect the diagnostic equipment from the vehicle.

Published: 11-May-2011

Electronic Engine Controls - Powertrain Control Module (PCM) Short Drive Cycle Self-Test

General Procedures

• NOTE: This procedure is an overcheck only. If fault codes are found, interrogation of the relevant system must be carried out and claimed against.

1. Connect the diagnostic equipment to the vehicle.
2. Follow on screen prompts and check for engine management fault codes.
3. Clear the fault codes following the on screen procedure.
4. Start the engine.
   - Allow the engine to idle for 30 seconds.
   - Raise the engine speed to 1500 rpm and hold for 3 minutes until a temperature of 70ºC (158 ºF) is achieved.
   - Allow the engine to idle for 30 seconds.
   - Switch off the engine.
5. NOTE: If fault codes are found, interrogation of the relevant system must be carried out and claimed against.

   Follow on screen prompts and check for engine management fault codes.
6. Disconnect the diagnostic equipment from the vehicle.

Electronic Engine Controls - Accelerator Pedal Position (APP) Sensor

Removal and Installation

Removal

All vehicles

• NOTE: Right-hand drive vehicles shown, left-hand drive vehicles similar.

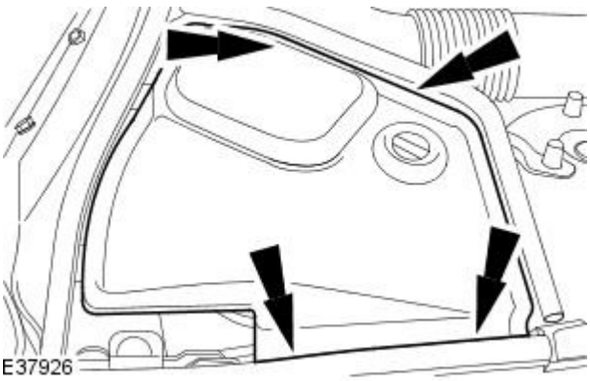

1. Remove the driver side bulkhead cover.

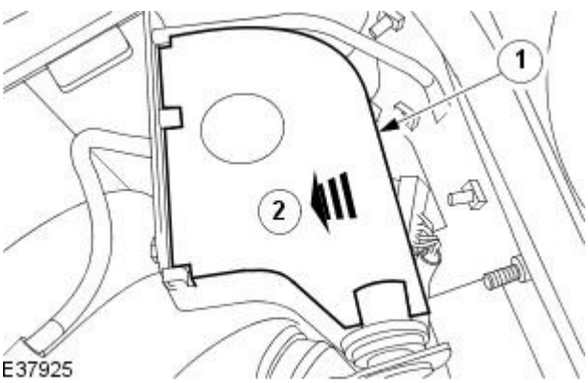

2. Open the accelerator pedal position (APP) sensor cover.

1. Release the APP sensor cover retaining clip.
2. Open the APP sensor cover.

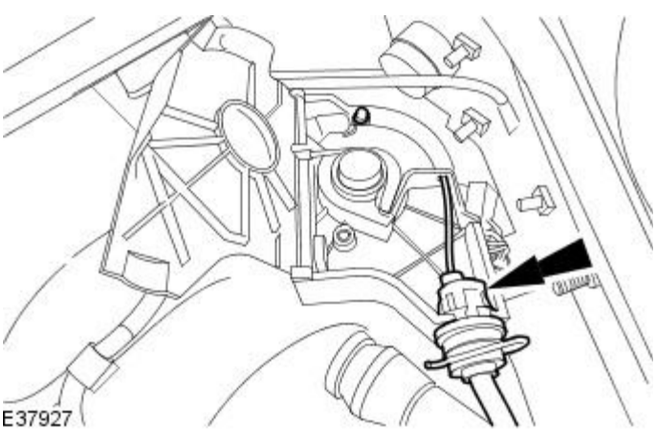

3. Detach the accelerator cable.

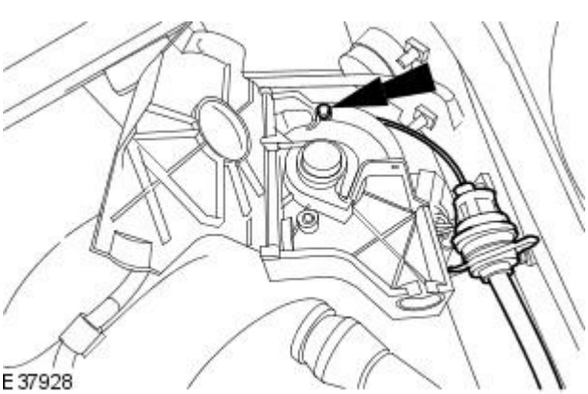

4. Detach the accelerator inner cable.

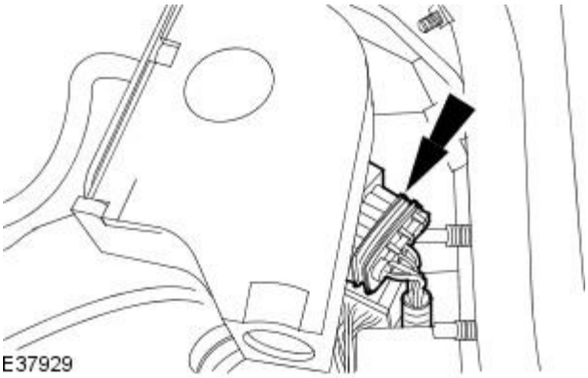

5. Disconnect the APP sensor electrical connector.

Left-hand drive vehicles

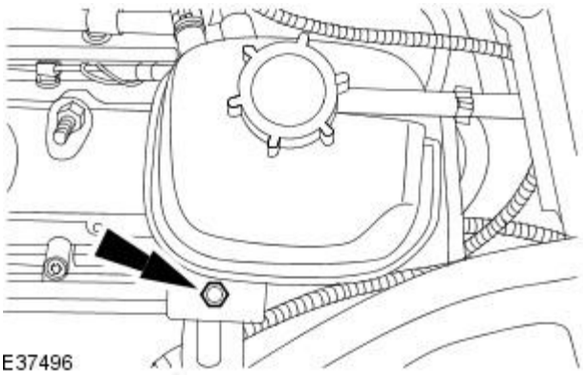

6. Remove the coolant expansion tank retaining bolt.

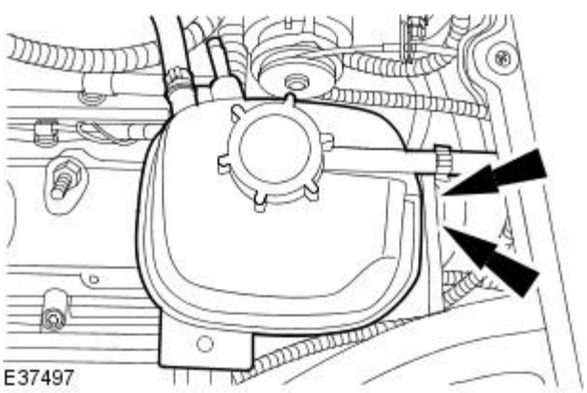

7. Detach the coolant expansion tank.

Left-hand drive vehicles with convertible top

8. Remove the cowl panel grille.
For additional information, refer to Section 501-02 Front End Body Panels.

9. Detach and reposition the bulkhead support.

Left-hand drive vehicles

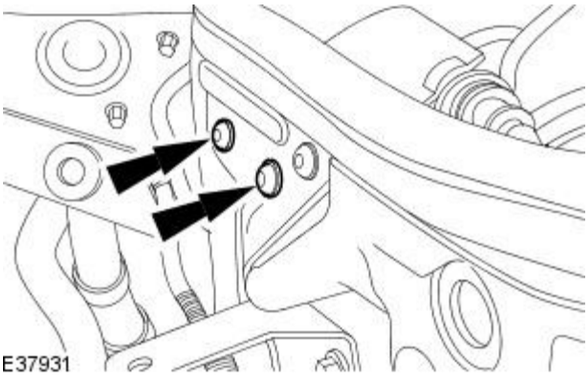

10. Detach the APP sensor.

All vehicles

• NOTE: Right-hand drive vehicles shown, left-hand drive vehicles similar.

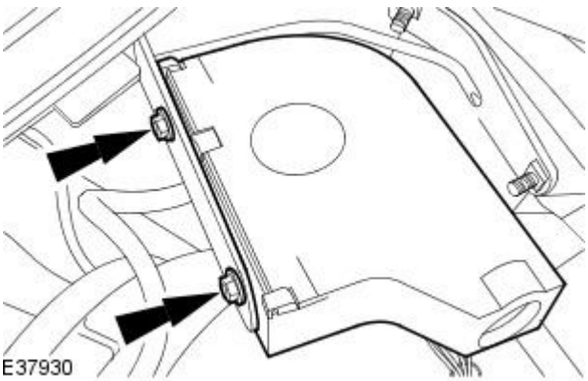

11. Remove the APP sensor.

Installation

All vehicles

• NOTE: Right-hand drive vehicles shown, left-hand drive vehicles similar.

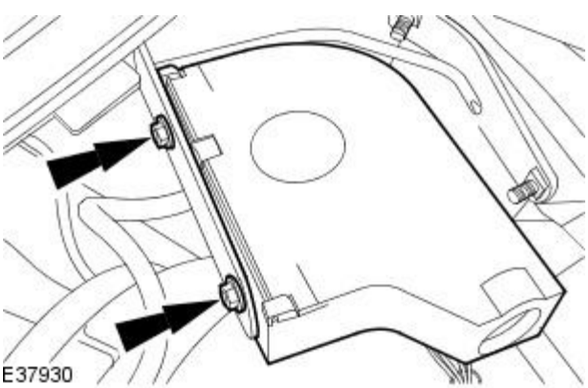

1. Install the APP sensor.

- Tighten to 7 Nm.

Left-hand drive vehicles

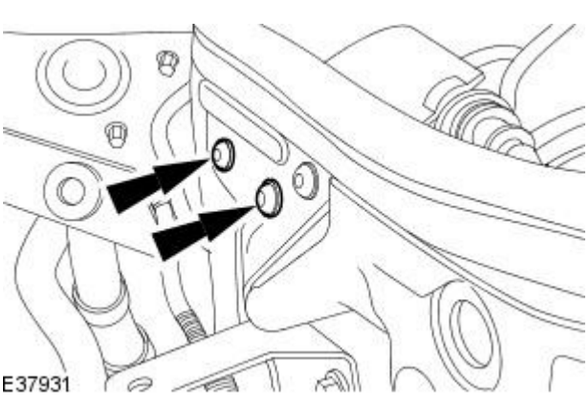

2. Attach the APP sensor.

- Tighten to 9 Nm.

Left-hand drive vehicles with convertible top

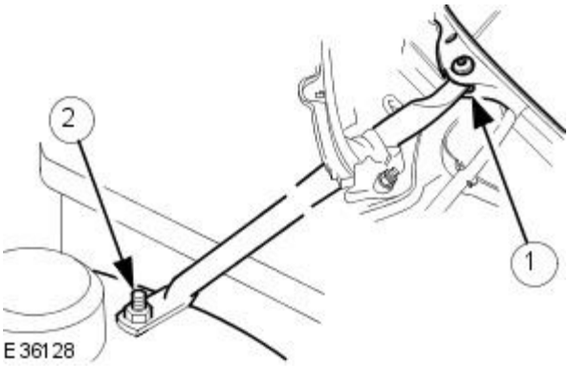

3. Attach the bulkhead support.

1. Tighten to 47 Nm.
2. Tighten to 30 Nm.

4. Install the cowl panel grille.
For additional information, refer to Section [501-02 Front End Body Panels](#).

Left-hand drive vehicles

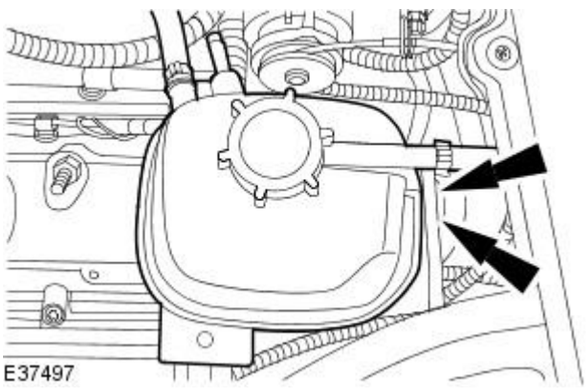

5. Attach the coolant expansion tank.

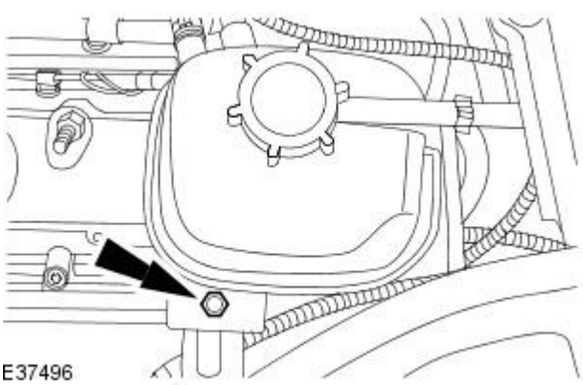

6. Install the coolant expansion tank retaining bolt.

- Tighten to 10 Nm.

All vehicles

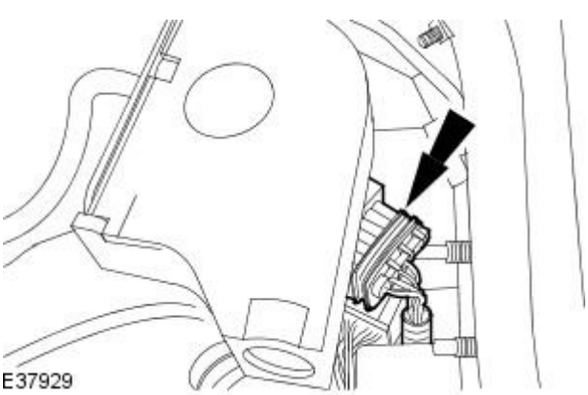

7. Connect the APP sensor electrical connector.

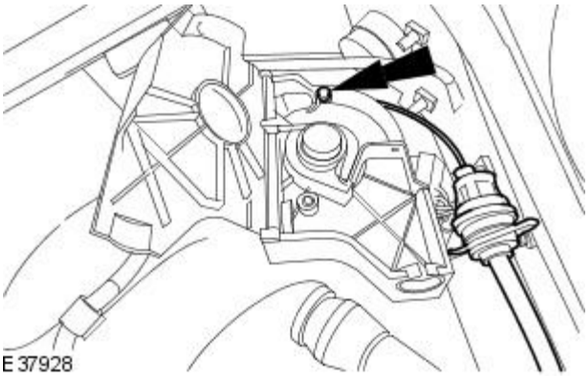

8. Attach the accelerator inner cable.

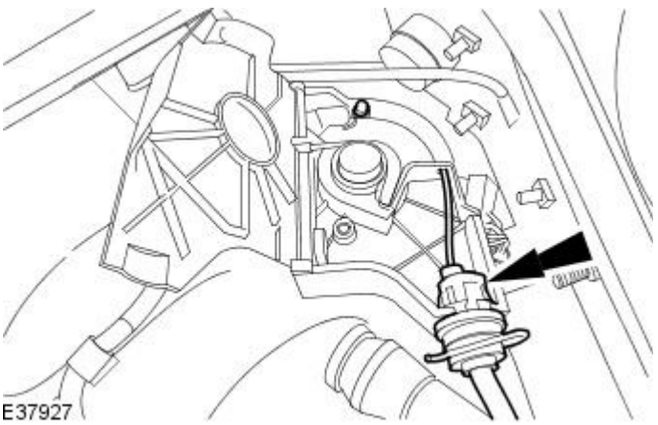

9. Attach the accelerator cable.

10. Adjust the accelerator cable.
For additional information, refer to Section 310-02 Acceleration Control.

Electronic Engine Controls - Camshaft Position (CMP) Sensor RH

Removal and Installation

Removal

Vehicles without supercharger

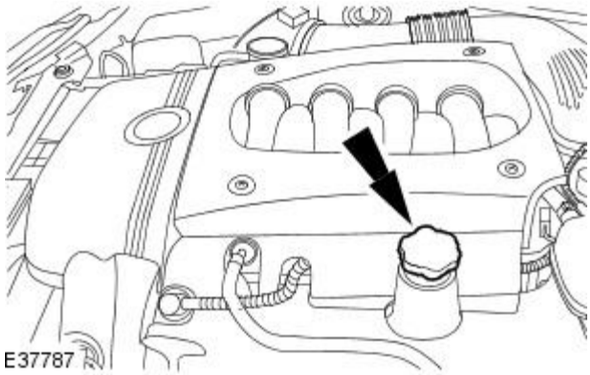

1. Remove the oil filler cap.

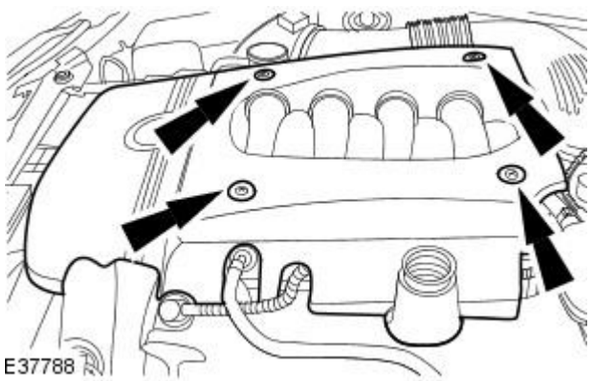

2. Remove the engine cover.

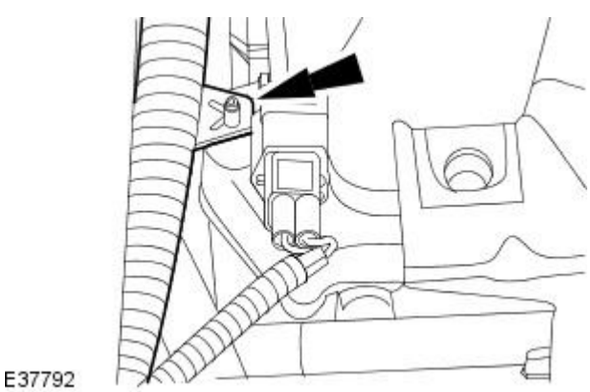

3. Detach the engine wiring harness.

All vehicles

- NOTE: Vehicles without supercharger shown, vehicles with supercharger similar.

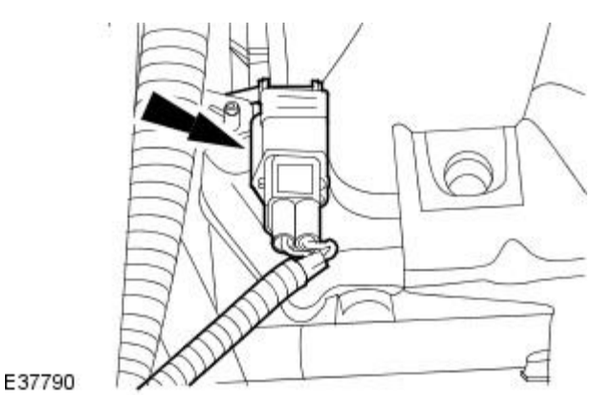

4. Detach the camshaft position (CMP) sensor electrical connector.

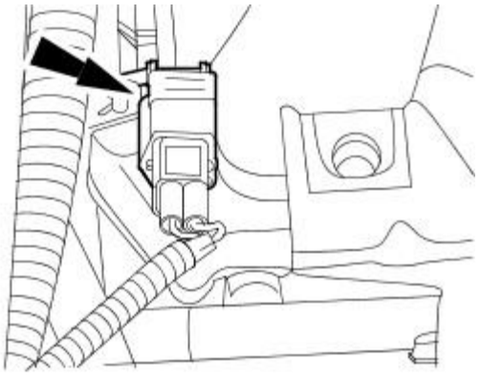

5. Disconnect the CMP sensor electrical connector.

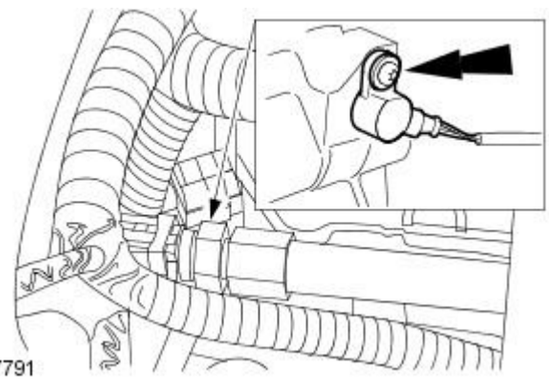

6. Remove the CMP sensor.

Installation

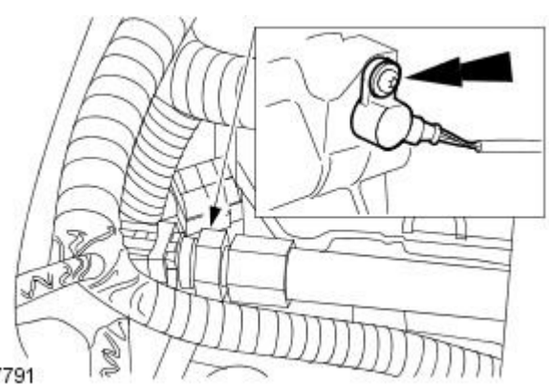

1. To install, reverse the removal procedure.

- Tighten to 7 Nm.

Published: 11-May-2011

Electronic Engine Controls - Catalyst Monitor Sensor LH

Removal and Installation

General Equipment

Snap-on tool S6176

Removal

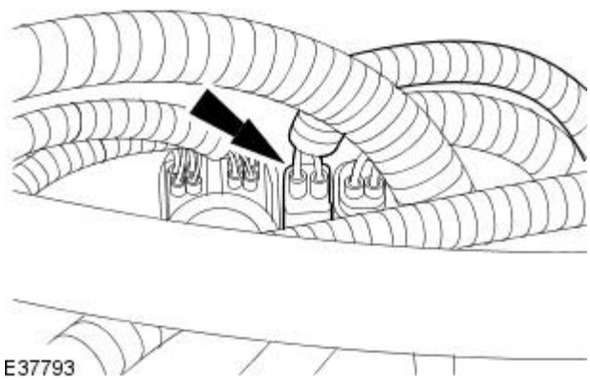

1. Detach the catalyst monitor sensor electrical connector.

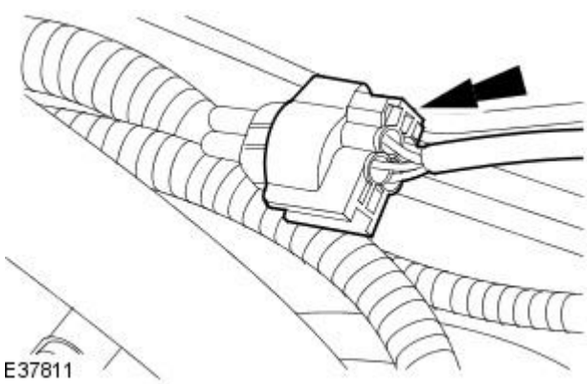

2. Disconnect the catalyst monitor sensor electrical connector.

3. Raise and support the vehicle.
For additional information, refer to: Jacking (100-02 Jacking and Lifting, Description and Operation).

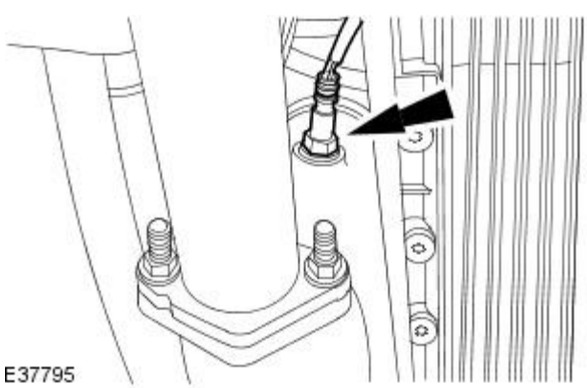

4. CAUTION: Make sure the wiring harness is not twisted or damaged on removal. Failure to follow this instruction may result in damage to the vehicle.

Using the Snap-on tool S6176, remove the catalyst monitor sensor.

Installation

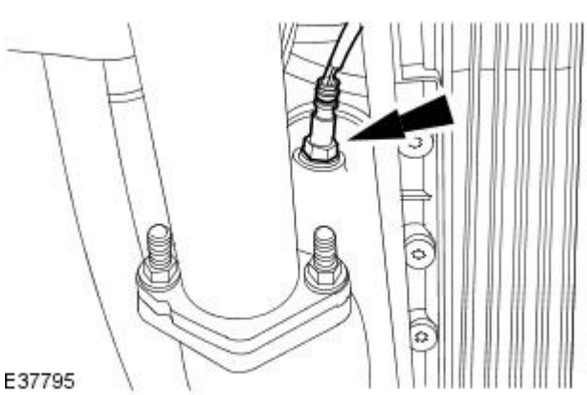

1. CAUTION: Make sure the wiring harness is not twisted or damaged on installation. Failure to follow this instruction may result in damage to the vehicle.

To install, reverse the removal procedure.

- Tighten to 45 Nm.

2. NOTE: For NAS vehicles only.
If required, carry out a long drive cycle.

For additional information, refer to: Powertrain Control Module (PCM) Long Drive Cycle Self-Test (303-14 Electronic Engine Controls, General Procedures).

Electronic Engine Controls - Crankshaft Position (CKP) Sensor

Removal and Installation

Removal

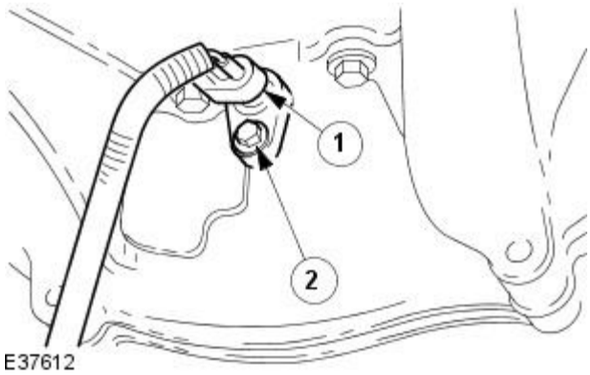

1. Disconnect the battery ground cable.
For additional information, refer to Section 414-01 Battery, Mounting and Cables.

2. Raise and support the vehicle.
For additional information, refer to Section 100-02 Jacking and Lifting.

3. Remove the crankshaft position (CKP) sensor.

1. Disconnect the CKP sensor electrical connector.
2. Remove the CKP sensor.

Installation

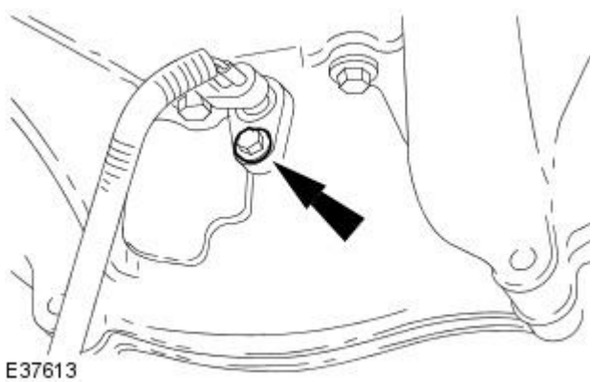

1. To install, reverse the removal procedure.

- Tighten to 7 Nm.

Electronic Engine Controls - Engine Control Module (ECM)

Removal and Installation

Special Tool(s)	
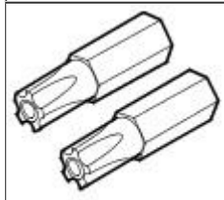 418-535	5 point security torx bit 418-535

Removal

1. Disconnect the battery ground cable.
   For additional information, refer to Section 414-01 Battery, Mounting and Cables.
2. Remove the passenger side bulk head cover.

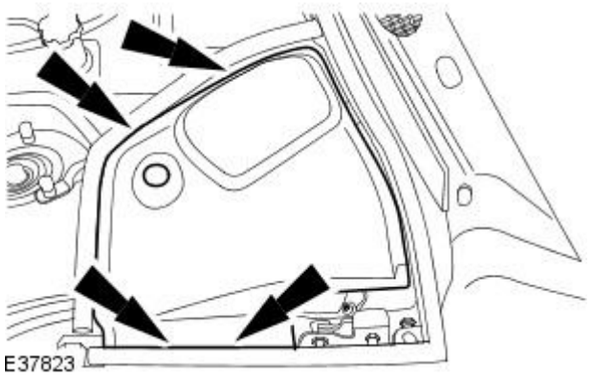

3. Remove the engine control module (ECM) cover.

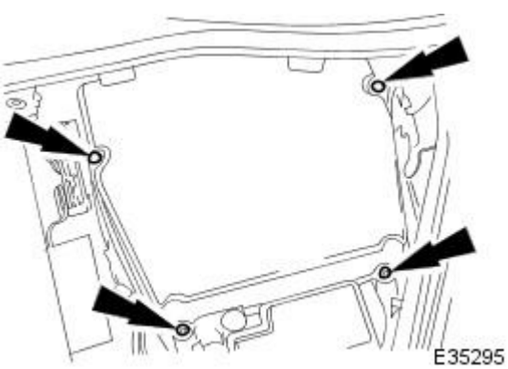

4. Detach the ECM.

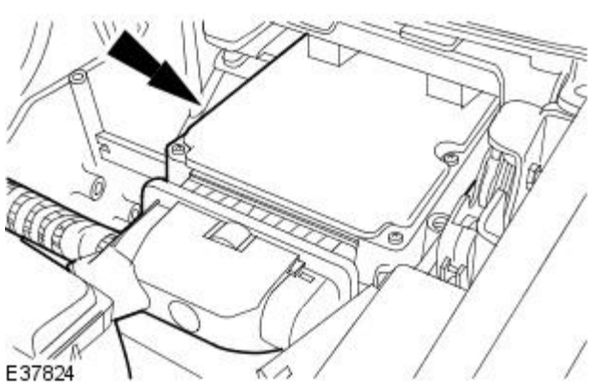

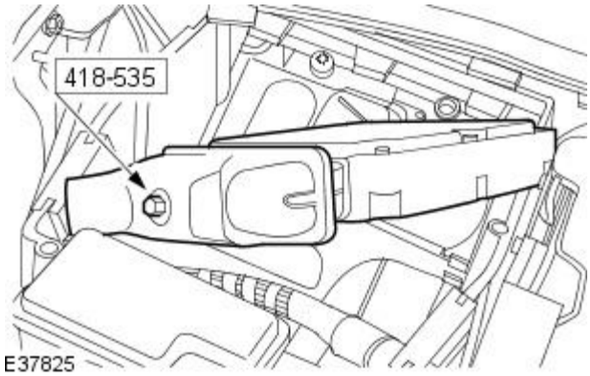

5. NOTE: The ECM electrical connector retaining bolt remains captive in the electrical connector.

Using the special tool remove the ECM.

Installation

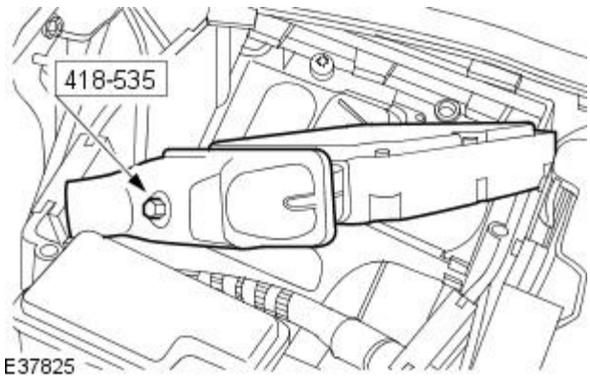

1. CAUTIONS:

Make sure the electrical connector locates correctly in the ECM. Do not force or overtighten the electrical connector.

Make sure the ECM support bracket is located correctly.

To install, reverse the removal procedure.

- Tighten to 5 Nm.

Electronic Engine Controls - Engine Coolant Temperature (ECT) SensorV8 4.2L Petrol

Removal and Installation

Removal

WARNING: To avoid hot coolant or steam blowing out of the cooling system, use extreme care when removing the coolant expansion tank pressure cap. Wait until the engine has cooled down, then insulate the coolant pressure cap with a suitable cloth and slowly loosen the coolant expansion tank pressure cap until the cooling system pressure is released. Step back while the pressure is released from the system. When all of the pressure has been released slowly remove the coolant expansion tank pressure cap (still with the suitable cloth in position) from the coolant expansion tank. Failure to follow this instruction may result in personal injury.

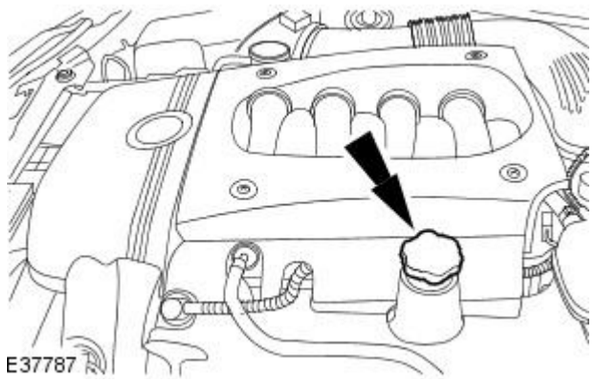

1. Remove the oil filler cap.

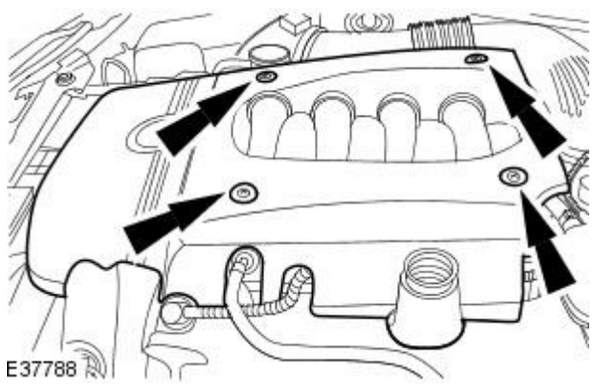

2. Remove the engine cover.

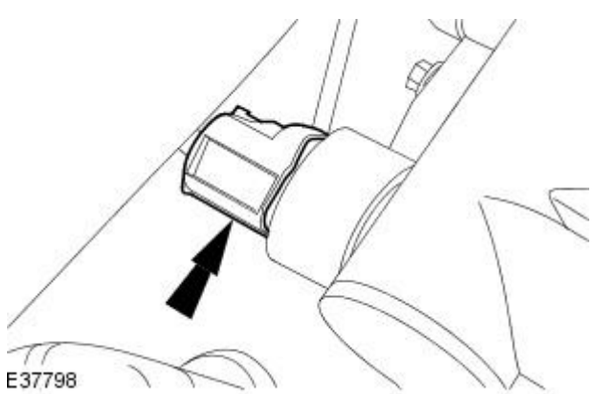

3. Disconnect the engine coolant temperature (ECT) sensor electrical connector.

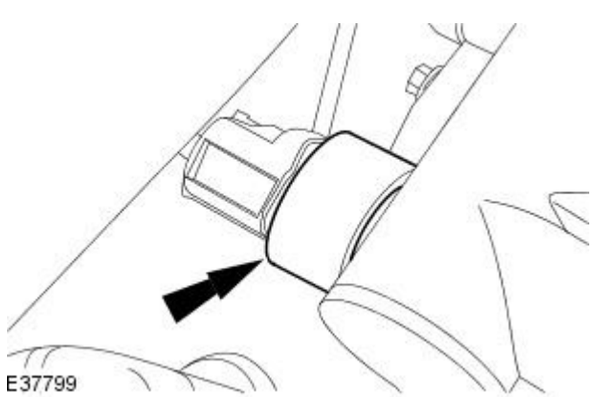

4. Remove the ECT sensor insulation.

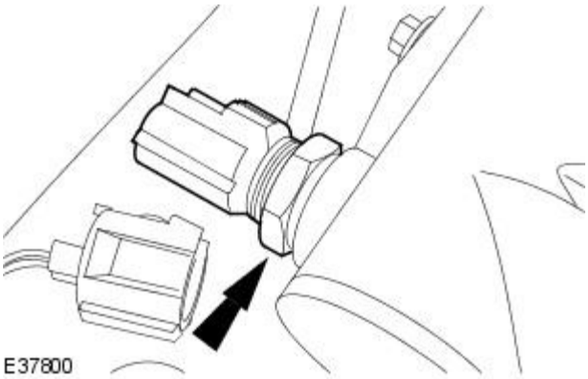

5. Remove the ECT sensor.

- Remove and discard the ECT sensor sealing washer.

Installation

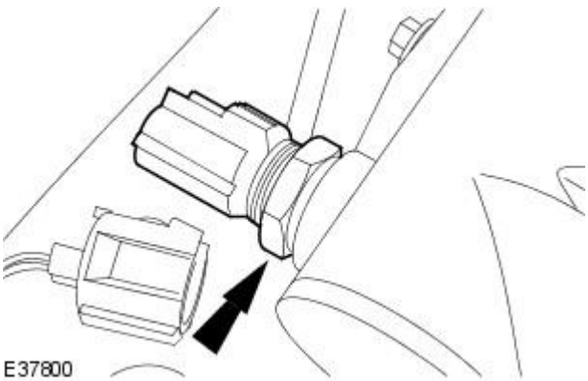

1. NOTE: Install a new ECT sensor sealing washer.

To install, reverse the removal procedure.

- Tighten to 17 Nm.

Published: 11-May-2011

Electronic Engine Controls - Engine Coolant Temperature (ECT) SensorV8 S/C 4.2L Petrol

Removal and Installation

Removal

WARNING: To avoid hot coolant or steam blowing out of the cooling system, use extreme care when removing the coolant expansion tank pressure cap. Wait until the engine has cooled down, then insulate the coolant pressure cap with a suitable cloth and slowly loosen the coolant expansion tank pressure cap until the cooling system pressure is released. Step back while the pressure is released from the system. When all of the pressure has been released slowly remove the coolant expansion tank pressure cap (still with the suitable cloth in position) from the coolant expansion tank. Failure to follow this instruction may result in personal injury.

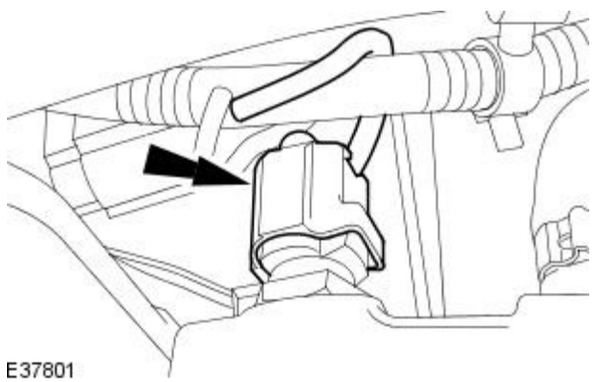

1. Disconnect the engine coolant temperature (ECT) sensor electrical connector.

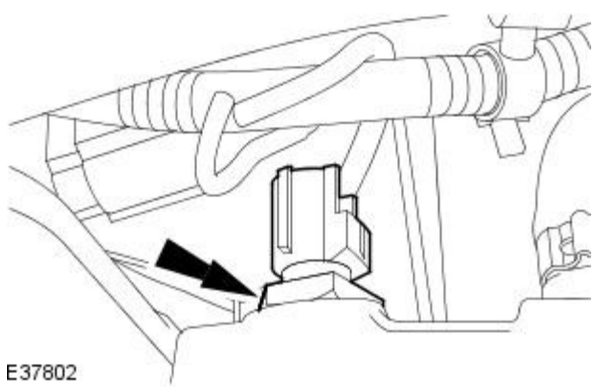

2. Remove the ECT sensor.
   - Remove and discard the ECT sensor sealing washer.

Installation

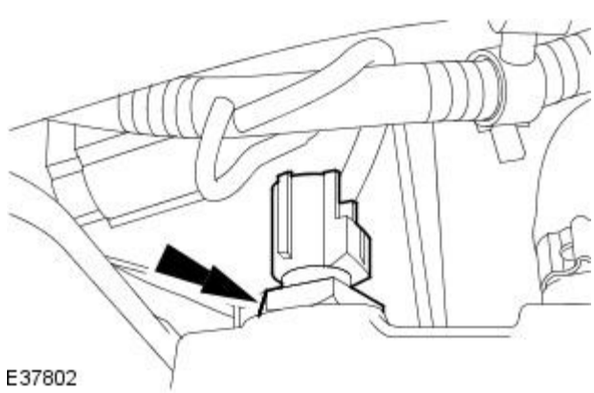

1. NOTE: Install a new ECT sensor sealing washer.

   To install, reverse the removal procedure.
   - Tighten to 17 Nm.

Electronic Engine Controls - Fuel Rail Pressure (FRP) Sensor

Removal and Installation

Removal

• WARNINGS:

Place the vehicle in a quarantined area and arrange "No Smoking/Petrol Fumes" signs about the vehicle.

Before any work is carried out on the fuel system, ground the vehicle to earth and maintain the ground connection until the work is complete.

Do not smoke or carry lighted tobacco or open flame of any type when working on or near any fuel related components. Highly flammable vapors are always present and may ignite. Failure to follow these instructions may result in personal injury.

The fuel system remains pressurized for a long time after the ignition is switched off. The fuel pressure must be relieved before attempting any repairs. Failure to follow these instructions may result in personal injury.

After carrying out repairs, the fuel system must be checked visually for leaks. Failure to follow these instructions may result in personal injury.

This procedure involves fuel handling. Be prepared for fuel spillage at all times and always observe fuel handling precautions. Failure to follow these instructions may result in personal injury.

If taken internally do not induce vomiting, seek immediate medical attention. Failure to follow these instructions may result in personal injury.

If fuel contacts the eyes, flush the eyes with cold water or eyewash solution and seek medical attention.

Wash hands thoroughly after handling, as prolonged contact may cause irritation. Should irritation develop, seek medical attention.

Do not carry or operate cellular phones when working on or near any fuel related components. Highly flammable vapours are always present and may ignite. Failure to follow these instructions may result in personal injury.

• NOTE: Vehicles without supercharger shown, vehicles with supercharger similar.

1. Release the fuel system pressure.
For additional information, refer to Section 310-00 Fuel System - General Information.

2. Disconnect the fuel rail pressure (FRP) sensor vacuum hose.

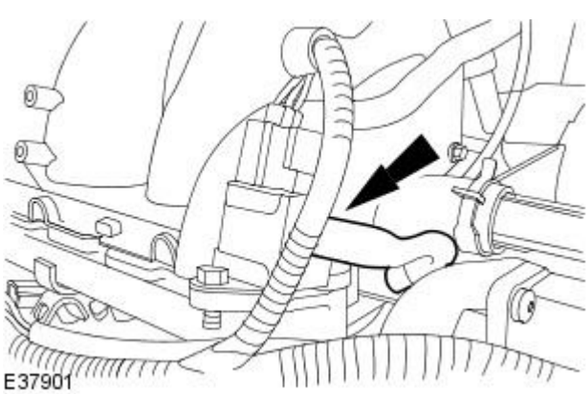

3. Disconnect the FRP sensor electrical connector.

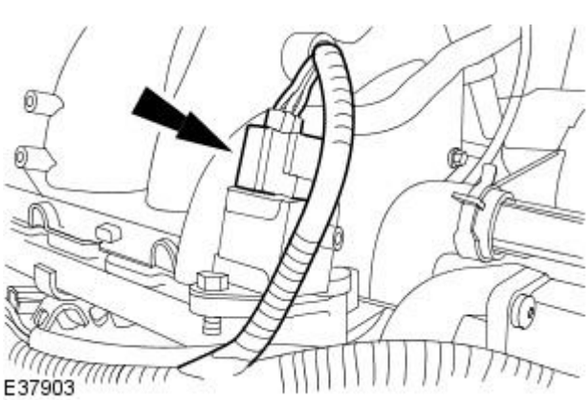

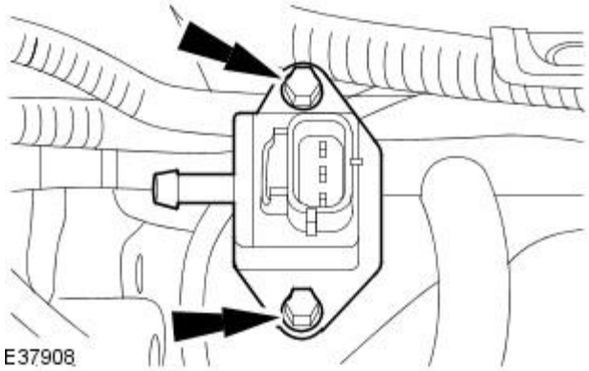

4. Remove the FRP sensor.

- Remove and discard the FRP sensor O-ring seals.

Installation

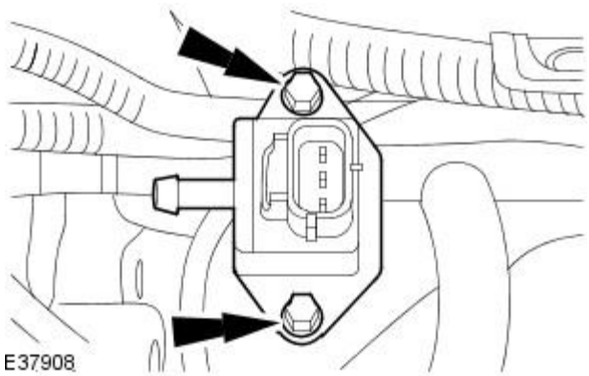

1. NOTE: Install new FRP sensor O-ring seals.

To install, reverse removal procedure.

- Tighten to 5 Nm.

Electronic Engine Controls - Fuel Temperature Sensor

Removal and Installation

Removal

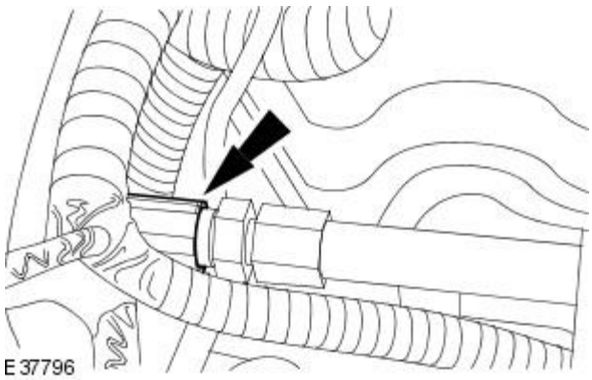

1. Disconnect the fuel temperature sensor electrical connector.

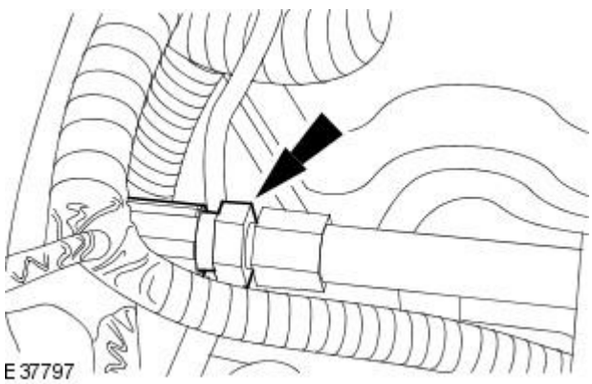

2. Remove the fuel temperature sensor.

Installation

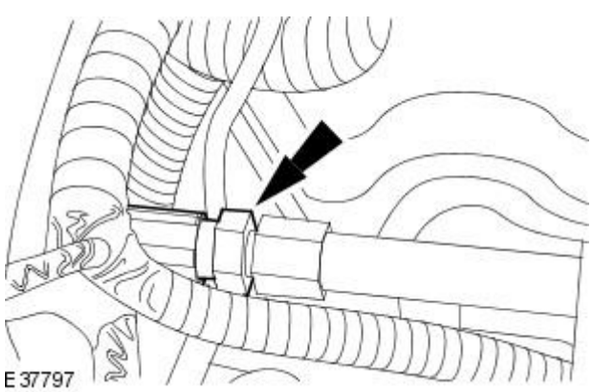

1. To install, reverse the removal procedure.

1. Tighten to 6 Nm.

Electronic Engine Controls - Heated Oxygen Sensor (HO2S) LH

Removal and Installation

General Equipment

Snap-on tool S6176

Removal

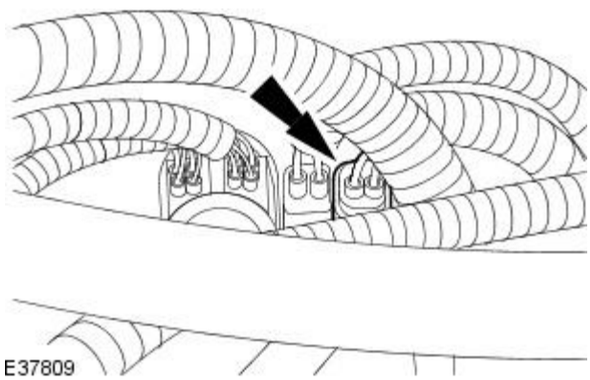

1. Detach the heated oxygen sensor (HO2S) electrical connector.

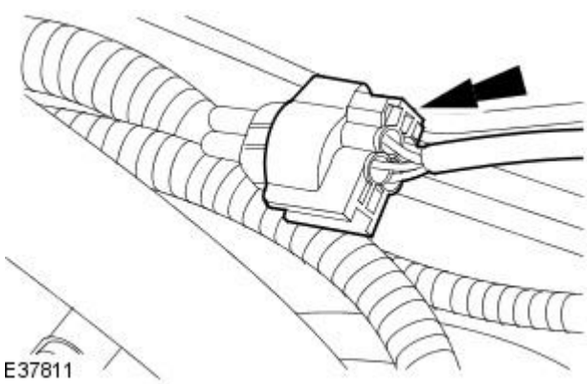

2. Disconnect the HO2S electrical connector.

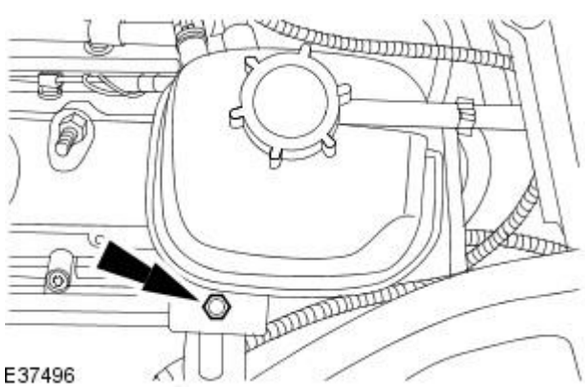

3. Remove the coolant expansion tank retaining bolt.

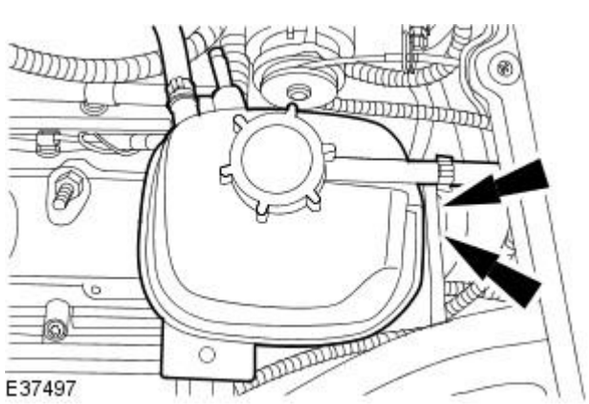

4. Detach the coolant expansion tank.

5. Disconnect the engine coolant level switch electrical connector.

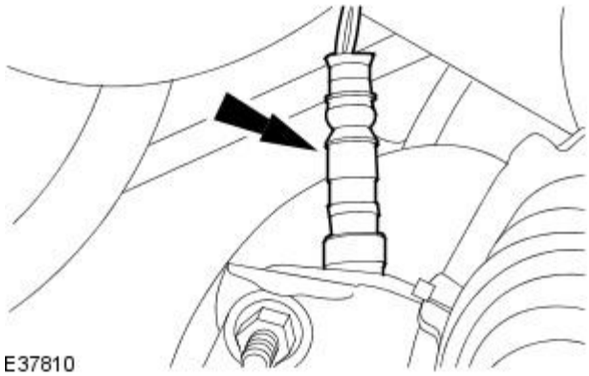

6. CAUTION: Make sure the wiring harness is not twisted or damaged on removal. Failure to follow this instruction may result in damage to the vehicle.

Using the Snap-on tool S6176, remove the HO2S.

Installation

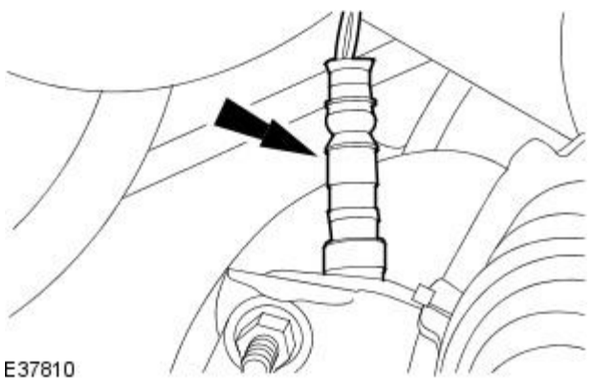

1. CAUTION: Make sure the wiring harness is not twisted or damaged on installation. Failure to follow this instruction may result in damage to the vehicle.

To install, reverse the removal procedure.

- Tighten to 45 Nm.

Electronic Engine Controls - Heated Oxygen Sensor (HO2S) RH

Removal and Installation

General Equipment

Snap-on tool S6176

Removal

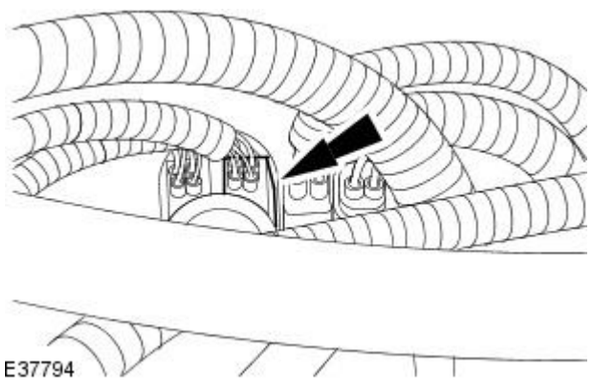

1. Remove the air cleaner outlet pipe.
   For additional information, refer to Section 303-12 Intake Air Distribution and Filtering.
2. Detach the heated oxygen sensor (HO2S) electrical connector.

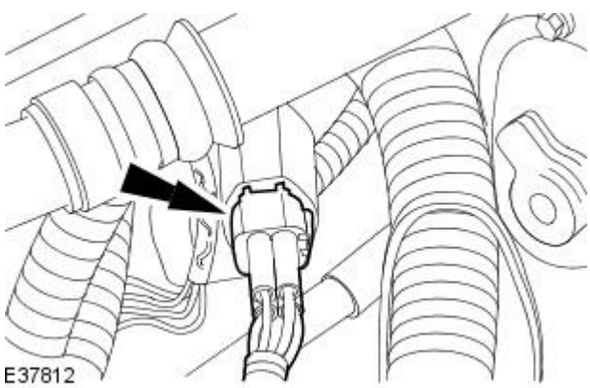

3. Disconnect the HO2S electrical connector.

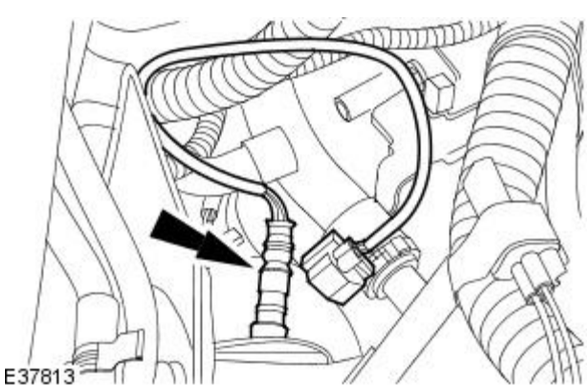

4. CAUTION: Make sure the wiring harness is not twisted or damaged on removal. Failure to follow this instruction may result in damage to the vehicle.

   Using the Snap-on tool S6176, remove the HO2S.

Installation

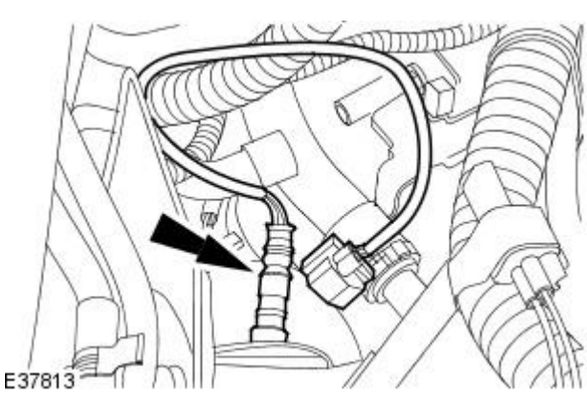

1. CAUTION: Make sure the wiring harness is not twisted or damaged on installation. Failure to follow this instruction may result in damage to the vehicle.

   To install, reverse the removal procedure.

   - Tighten to 45 Nm.

Electronic Engine Controls - Intake Air Temperature (IAT) Sensor

Removal and Installation

Removal

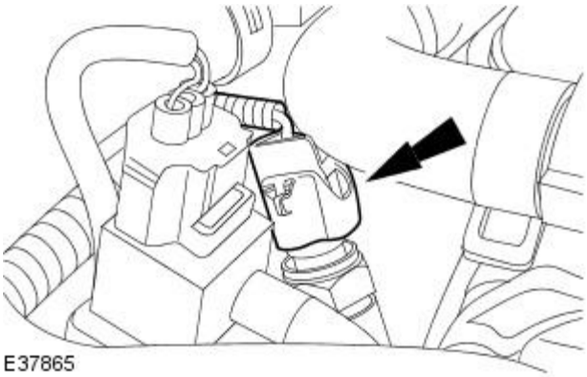

1. Disconnect the intake air temperature (IAT) sensor electrical connector.

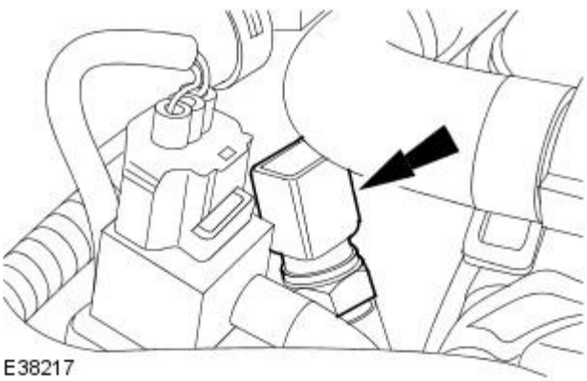

2. Remove the IAT sensor.

- Remove and discard the IAT sealing washer.

Installation

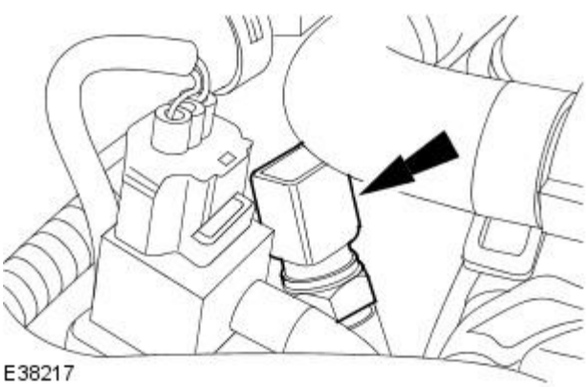

1. NOTE: Install a new IAT sensor sealing washer.

To install, reverse the removal procedure.

- Tighten to 35 Nm.

Electronic Engine Controls - Knock Sensor (KS) LH

Removal and Installation

Removal

Vehicles with supercharger

1. Remove the supercharger.
   For additional information, refer to Section 303-12 Intake Air Distribution and Filtering.
2. Remove the noise isolator.

Vehicles without supercharger

3. Remove the intake manifold.
   For additional information, refer to Section 303-01 Engine.

All vehicles

4. Disconnect the knock sensor (KS) electrical connector.

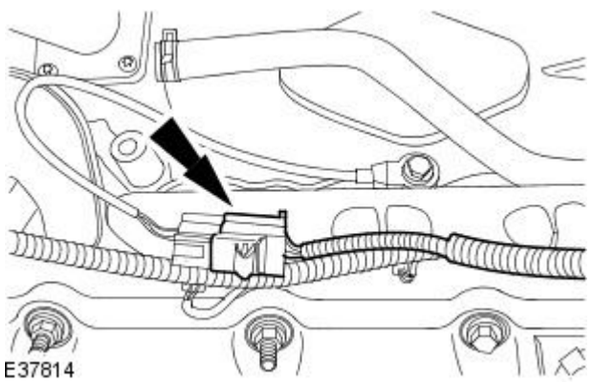

5. Remove the KS.

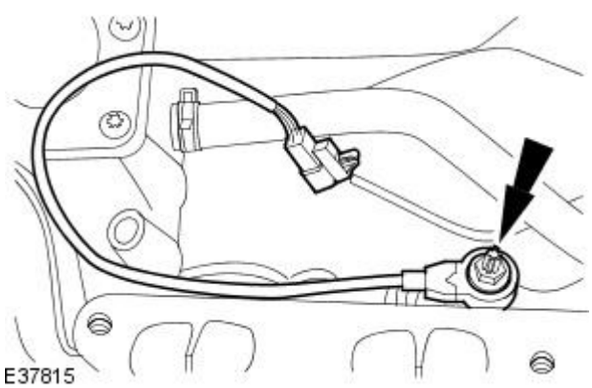

Installation

1. To install, reverse the removal procedure.
   - Tighten to 20 Nm.

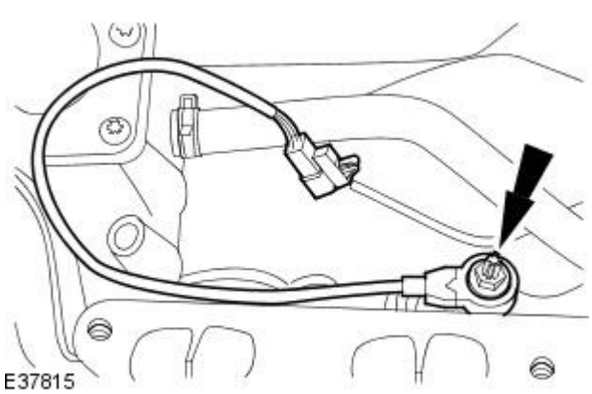

Electronic Engine Controls - Manifold Absolute Pressure (MAP) Sensor

Removal and Installation

Removal

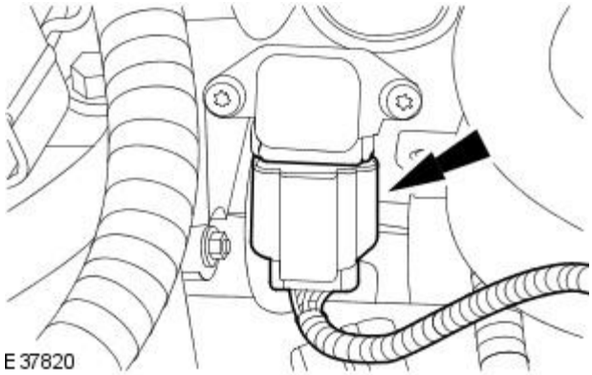

1. Disconnect the manifold absolute pressure (MAP) sensor electrical connector.

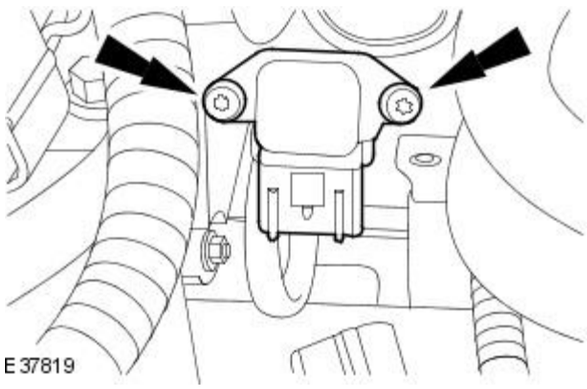

2. Remove the MAP sensor.

Installation

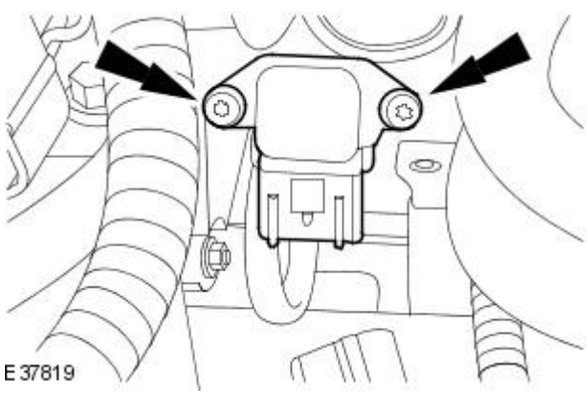

1. To install, reverse the removal procedure.
   - Tighten to 10 Nm.

2. NOTE: For NAS vehicles only.

   If required, carry out a short drive cycle.
   For additional information, refer to: Powertrain Control Module (PCM) Short Drive Cycle Self-Test (303-14 Electronic Engine Controls, General Procedures).

Electronic Engine Controls - Mass Air Flow (MAF) Sensor

Removal and Installation

Removal

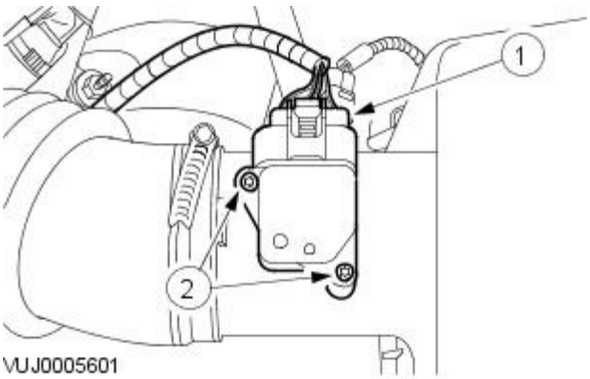

1. Remove the mass air flow (MAF) sensor.

1. Disconnect the MAF sensor electrical connector.
2. Remove the MAF sensor.

Installation

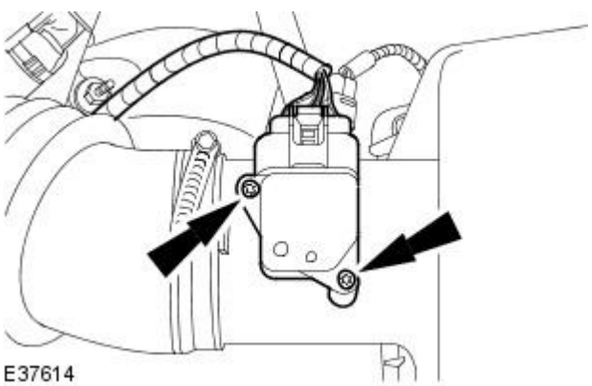

1. To install, reverse the removal procedure.

- Tighten to 2 Nm.

2. NOTE: For NAS vehicles only.

If required, carry out a short drive cycle.
For additional information, refer to: Powertrain Control Module (PCM) Short Drive Cycle Self-Test (303-14 Electronic Engine Controls, General Procedures).

Electronic Engine Controls - Oil Temperature Sensor

Removal and Installation

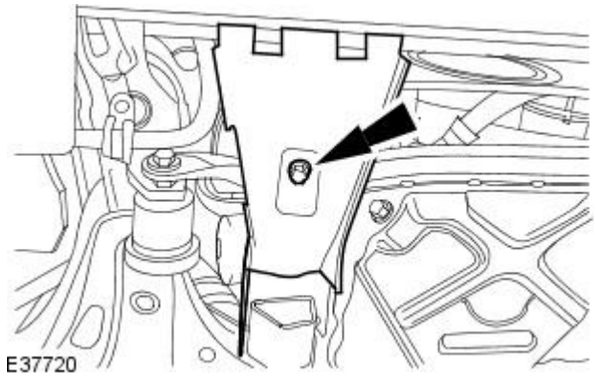

1. Raise and support the vehicle.
   For additional information, refer to Section 100-02 Jacking and Lifting.
2. Remove the generator lower cooling duct.

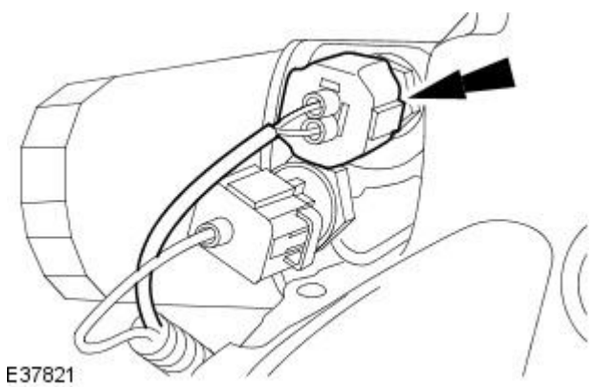

3. Disconnect the oil temperature sensor electrical connector.

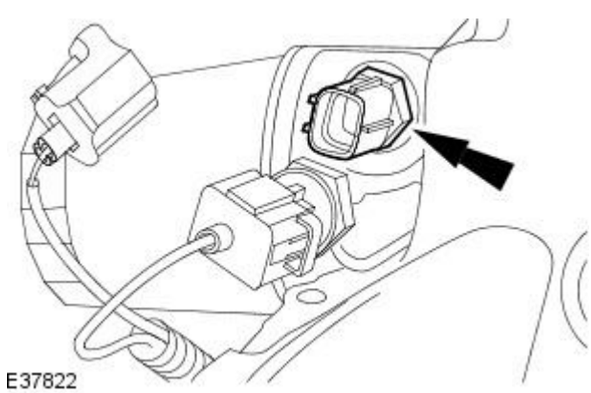

4. Remove the oil temperature sensor.

Installation

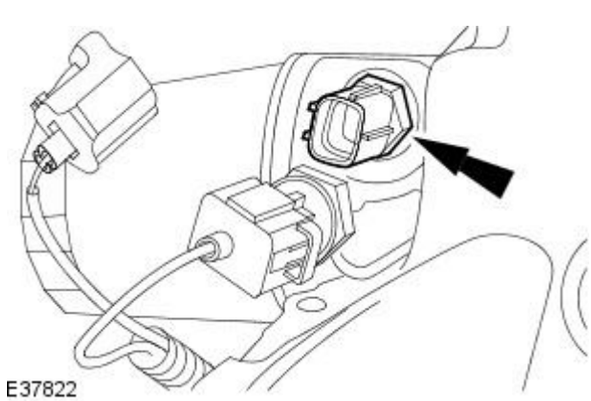

1. NOTE: Apply a small bead of sealant meeting Jaguar specification to the first three threads of the oil temperature sensor.

   Install the oil temperature sensor.

   - Tighten to 15 Nm.

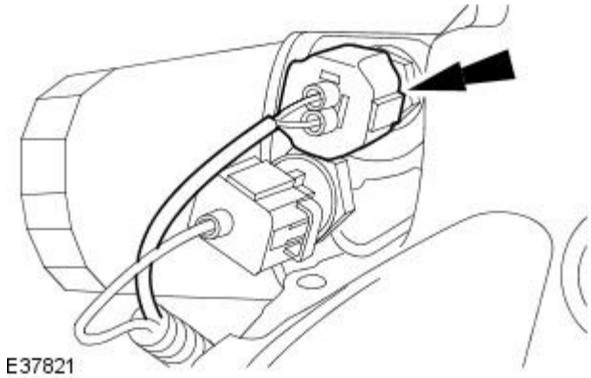

2. Connect the oil temperature sensor electrical connector.

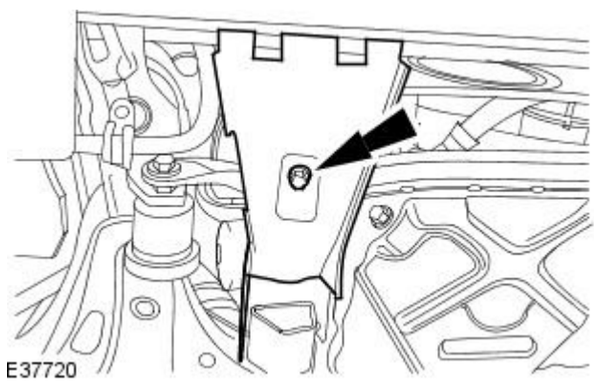

3. Install the generator lower cooling duct.

- Tighten to 2 Nm.

4. Lower the vehicle.

5. Check and, if necessary, top up the engine oil.

Published: 11-May-2011

Electronic Engine Controls - Variable Camshaft Timing (VCT) Oil Control Solenoid

Removal and Installation

Removal

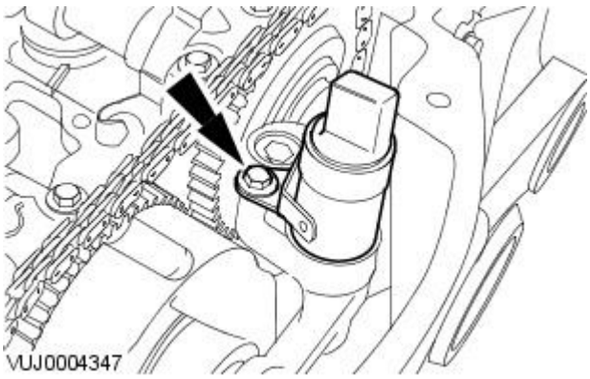

1. Remove the valve cover. For additional information, refer to: (303-01 Engine)

   Valve Cover LH (In-vehicle Repair),
   Valve Cover RH (In-vehicle Repair).

2. Remove the variable camshaft timing oil control solenoid.

Installation

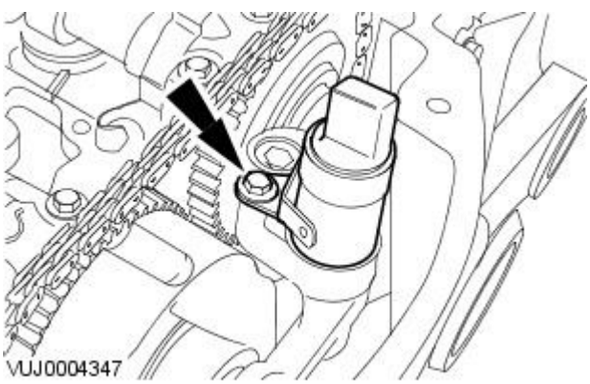

1. To install, reverse the removal procedure.
   - Tighten to 11 Nm.

2. NOTE: For NAS vehicles only.

   If required, carry out a short drive cycle.
   For additional information, refer to: Powertrain Control Module (PCM) Short Drive Cycle Self-Test (303-14 Electronic Engine Controls, General Procedures).

Automatic Transmission / Transaxle -

Fluid Maintenance

CAUTION: Use only Shell M1375.4 Automatic transmission fluid. Use of any other fluids may result in a transmission malfunction or failure.

Description	Intervals
Normal Maintenance	Not necessary. Filled for life.
Severe Duty Maintenance	Change the fluid at 48,000 km (30,000 miles) intervals.

Lubricants, Fluids, Sealers and Adhesives

Description	Specification
Transmission Fluid	Shell M1375.4
Sealant	WSS-M4G323-A6
Metal Surface Cleaner	WSW-M5B392-A
High Temperature Grease	Molecote FB180

General Specifications

Engine	Approximate Liters	Refill Capacity [1] U.S. Quarts
4.2L	10.0	10.57

1 Approximate dry capacity, includes cooler and tubes. Check the level at normal operating temperature. DO NOT OVERFILL. If it is necessary to add or change fluid, use only fluid which has been certified by the supplier as meeting the Jaguar Cars Ltd specification shown.

Torque Specifications

Description	Nm	lb-ft	lb-in
Automatic transmission to engine retaining bolts	48	35	-
Transmission mount retaining bolts	50	113	-
Transmission fluid fill plug	A	A	A
Transmission control module (TCM) and main control valve body retaining screws	8	-	53
Output shaft flange retaining nut	60	44	-
Torque converter retaining bolts	55	41	-
Selector lever cable and bracket retaining bolts	11	8	-
Transmission fluid cooler tubes retaining bolt	23	17	-
Transmission fluid drain plug	8	-	53
Transmission fluid pan, gasket and filter retaining screws	8	-	53
A = refer to the procedure for correct torque sequence			

Published: 11-May-2011

Automatic Transmission / Transaxle - Transmission Description

Description and Operation

The ZF 6HP26 automatic transmission has been developed for vehicles with an engine torque of up to 600 Newton-metres (Nm). This transmission uses planetary gears with hydraulic-electronic control. The transmission control module (TCM) and the main control valve body units form a composite element that is installed as a single unit inside the automatic transmission.

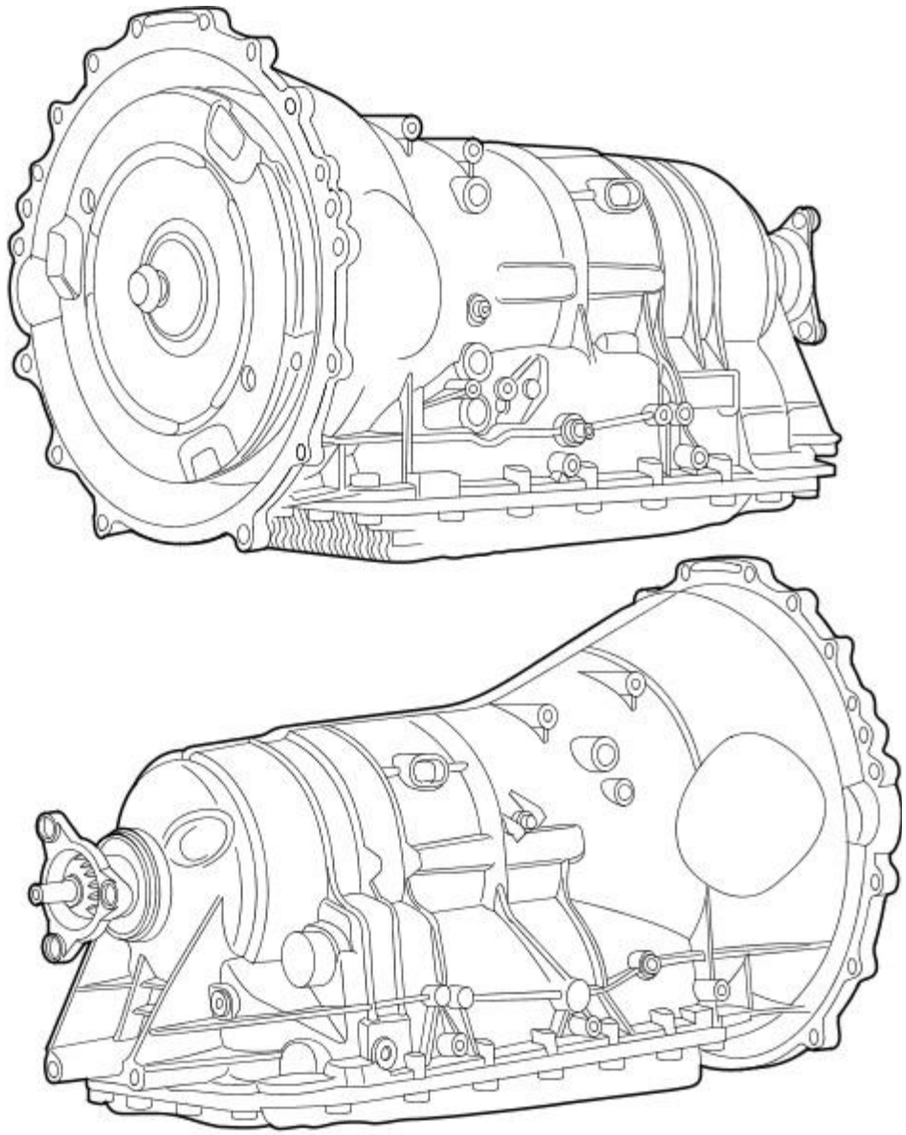

E30230

The 6HP26 has the following features:

- six forward speeds.
- a torque converter with an integral converter lock up clutch.
- electronic shift and pressure controls.
- a single planetary gear set.
- a double planetary gear set.
- two fixed multi-disc brakes.
- three multi-plate clutches.

All hydraulic functions are directed by electronic solenoids to control:

- engagement feel.
- shift feel.
- shift scheduling.
- modulated torque converter clutch (TCC) applications.
- engine braking utilizing the coast clutch.

Engine power reaches the transmission by a torque converter with integral converter lock up clutch. The 6 forward gears and 1 reverse gear are obtained from a single planetary set followed by a double planetary set also known as lepelletier-type gear sets, these gear sets make it possible to obtain 6 forward gears.

The 6HP26 Automatic Transmission is a six speed electronically controlled transmission comprising the basic elements of a TCM and main control valve body unit, a torque converter, one solenoid valve and six pressure regulators. Gear selection is achieved by the control of Automatic Transmission Fluid (ATF) flow to operate various internal clutches. The TCM operates the electrical components and provides for the control of gear selection shift pressure which increases refinement and torque converter slip control.

In the event of a system fault the TCM also provides for Failure Mode Effect Management (FMEM) to maintain maximum functional operation of the transmission with a minimum reduction in driver, passenger or vehicle safety. In the event of a total loss of control or electrical power the basic transmission functions Park, Reverse, Neutral and Drive are retained. Also 3rd or 5th gear is retained by the hydraulic system, the gear retained is dependant upon the gear selected at time of the failure.

The transmission also contains turbine and output shaft speed sensors, an internal P, R, N, D selector shaft position sensor, and a transmission fluid temperature sensor. The TCM also requires information from the J-Gate to determine when the driver has initiated manual gear selection. The TCM communicates with other electronic control modules by the controller area network (CAN).

The TCM also provides for legislated transmission diagnostics, which meet the requirements of CARB OBDII legislation, monitoring all components, which may effect vehicle emissions. Additional diagnostic functions are also supported to ensure fast repairs of all failures in the service environment.

Upshifts

Transmission upshifting is controlled by the TCM. The TCM receives inputs from various engine or vehicle sensors and driver demands to control shift scheduling, shift feel and torque converter clutch (TCC) operation.

The TCM has an adaptive learn strategy to electronically control the transmission which will automatically adjust the shift feel.

Downshifts

Under certain conditions the transmission will downshift automatically to a lower gear range (without moving the gearshift lever). There are three categories of automatic downshifts, coastdown, torque demand and forced or kickdown shifts.

Coastdown

The coastdown downshift occurs when the vehicle is coasting down to a stop.

Torque Demand

The torque demand downshift occurs (automatically) during part throttle acceleration when the demand for torque is greater than the engine can provide at that gear ratio. If applied, the transmission will disengage the TCC to provide added acceleration.

Kickdown

For maximum acceleration, the driver can force a downshift by pressing the accelerator pedal to the floor. A forced downshift into a lower gear is possible below calibrated speeds. Specifications for downshift speeds are subject to variations due to tire size and engine and transmission calibration requirements.

Range Selection

Depending on the vehicle options selected the transmission range selector may have different range positions.

The standard range selector has eight positions: P, R, N, D, 5, 4, 3 and 2.

J-Gate Range Selection

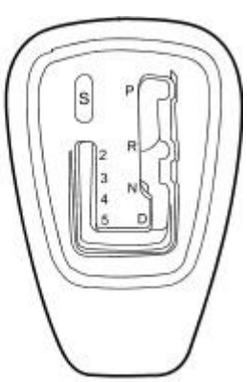

E30231

"P"

In the PARK position:

- there is no power flow through the transmission.
- the parking pawl locks the output shaft to the case.
- the engine may be started.
- the ignition key may be removed.

"R"

In the REVERSE position:

- the vehicle may be operated in a rearward direction, at a reduced gear ratio.
- backup lamps are illuminated.

"N"

In the NEUTRAL position:

- there is no power flow through the transmission.
- the output shaft is not held and is free to turn.
- the engine may be started.

"D"

DRIVE is the normal position for most forward driving.

The D position provides:

- automatic shift 1-6 and 6-1.
- apply and release of the torque converter clutch.
- maximum fuel economy during normal operation.
- engine braking in 6th gear.

"5"

The 5 position provides:

- automatic shift 1-5 and 5-1.
- apply and release of the torque converter clutch.
- engine braking in 5th gear.

"4"

The 4 position provides:

- automatic shift 1-4 and 4-1.
- apply and release of the torque converter clutch.
- engine braking in 4th gear.

"3"

The 3 position provides:

- automatic shift 1-3 and 3-1.
- engine braking in 3rd gear.

"2"

The 2 position provides:

- automatic shift 1-2 and 2-1.
- engine braking in 2nd gear.

"S"

The sport mode switch:

- allows the driver to select or de-select the automatic transmission sport mode.
- allows the automatic transmission to operate normally when the sport mode is selected, but under acceleration the gear shift points are extended to make full use of the engine's power reserves.
- allows the driver to drive the vehicle in the "D" position with the full automatic transmission shift or manually shift gears in the "second, third, fourth and fifth" positions.
- is illuminated when Sport mode is selected.
- communicates with the TCM through the CAN network to show the sport mode switch status.

Torque converter

The torque converter is a three element unit containing a single plate lock up clutch. The lock up clutch can be controlled and engaged in any gear 1 to 6. The clutch is applied by removing transmission fluid pressure from one side of the plate. The torque converter transmits and multiplies torque. The torque converter is a three-element device:

- impeller assembly
- turbine assembly
- reactor assembly

The standard torque converter components operate as follows:

- The impeller, which is driven by the engine, imparts a circular flow to the transmission fluid in the converter.
- This transmission fluid strikes the turbine wheel, which causes the flow to change its direction.
- The transmission fluid flows out of the turbine wheel close to the hub and strikes the stator, where its direction is changed again to a direction suitable for re-entering the impeller.
- The change in direction at the stator generates a torque reaction that increases the torque reaching the turbine.
- The ratio between turbine and impeller torque is referred to as torque multiplication or conversion.
- The greater the difference in speeds of rotation at the impeller and turbine, the greater the increase in torque; The maximum increase is obtained when the turbine wheel is stationary. As turbine wheel speed increases, the amount of torque multiplication gradually drops.
- When the turbine wheel is rotating at about 85 % of the impeller speed, torque conversion reverts to 1, that is to say torque at the turbine wheel is no higher than the torque at the impeller.
- The stator, which is prevented from rotating backwards by a freewheel and the shaft in the transmission housing, runs freely in the transmission fluid flow and overruns the freewheel. From this point on, the converter acts only as a fluid coupling. During the torque conversion process, the stator ceases to rotate and bears against the housing by the freewheel.

Torque converter

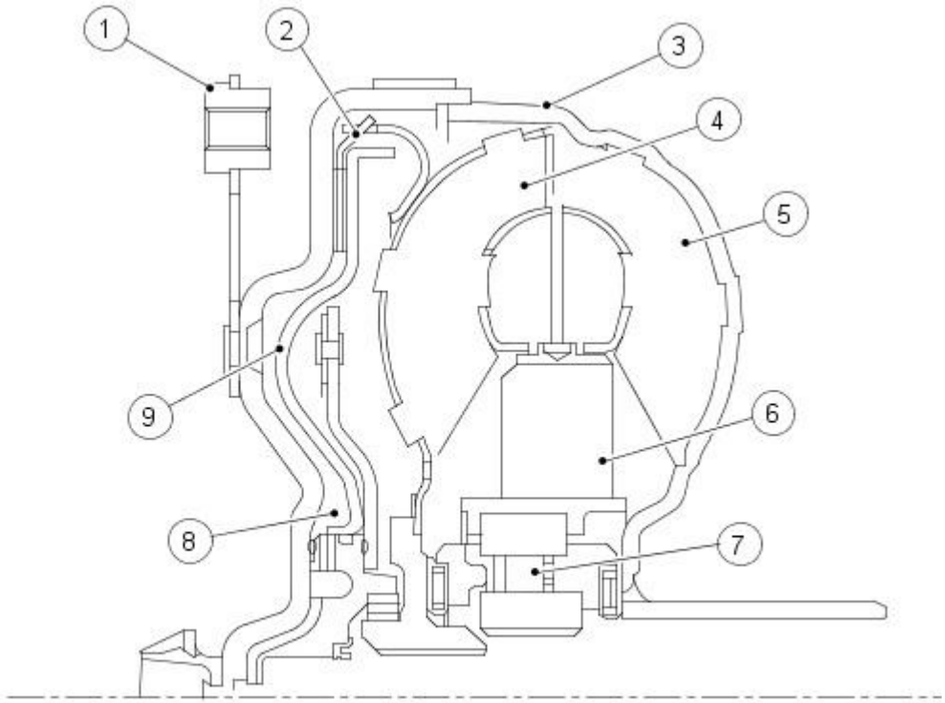

E31501

Item	Part Number	Description
1	-	Torque converter retaining plate
2	-	Lock-up clutch lined plate
3	-	Torque converter cover
4	-	Turbine
5	-	Impeller
6	-	Stator
7	-	Stator freewheel
8	-	Space behind lock-up clutch
9	-	Lock-up clutch piston

Torque Converter Lock-up Clutch

The torque converter lock-up clutch is a device that eliminates slip in the torque converter and therefore helps to keep fuel consumption to a minimum.

The torque converter lock-up clutch is engaged and released by the control system. During the actuating phase, a slight difference is selected between the impeller and turbine wheels.

Pressure at the torque converter lock-up clutch piston is determined by an electronic pressure control valve.

The torque converter lock-up clutch can be controlled and engaged in any gear from 1 to 6. When decoupling takes place the actuating clutch A in the transmission is dependent on load and output speed.

When the torque converter lock-up clutch is released, transmission fluid pressures behind the lock-up clutch piston turbine area are equalized. The direction of flow is through the turbine shaft and the area behind the piston into the turbine area.

To engage the torque converter lock-up clutch the direction of transmission fluid flow is changed and reversed by a valve in the hydraulic control unit. At the same time the space behind the torque converter lock-up clutch piston is vented.

Oil pressure extends from the turbine area to the torque converter lock-up clutch piston and presses it against the cover outer shell of the torque converter. This locks the turbine wheel by way of the lined disc between the piston and the cover and enables the drive to pass with limited slip to the planetary gear train in normal operating conditions.

Geartrain

Power is transmitted from the torque converter to the planetary gearsets through the input shaft. Clutches are used to hold and drive certain combinations of gearsets. This results in six forward ratios and one reverse ratio, which are transmitted to the output shaft and differential.

Gear Ratio

Gear	ratios
1st	4.17:1
2nd	2.34:1
3rd	1.52:1
4th	1.14:1
5th	0.87:1
6th	0.69:1
Rev	3.40:1

Single Planetary Gearset

The single planetary gear overdrive carrier is driven by the input shaft.

The single planetary gear set consists of:

- 1 sunwheel

- 4 planetary gears meshing with the sunwheel
- 1 planetary gear carrier
- 1 ring gear

Single Planetary Gearset

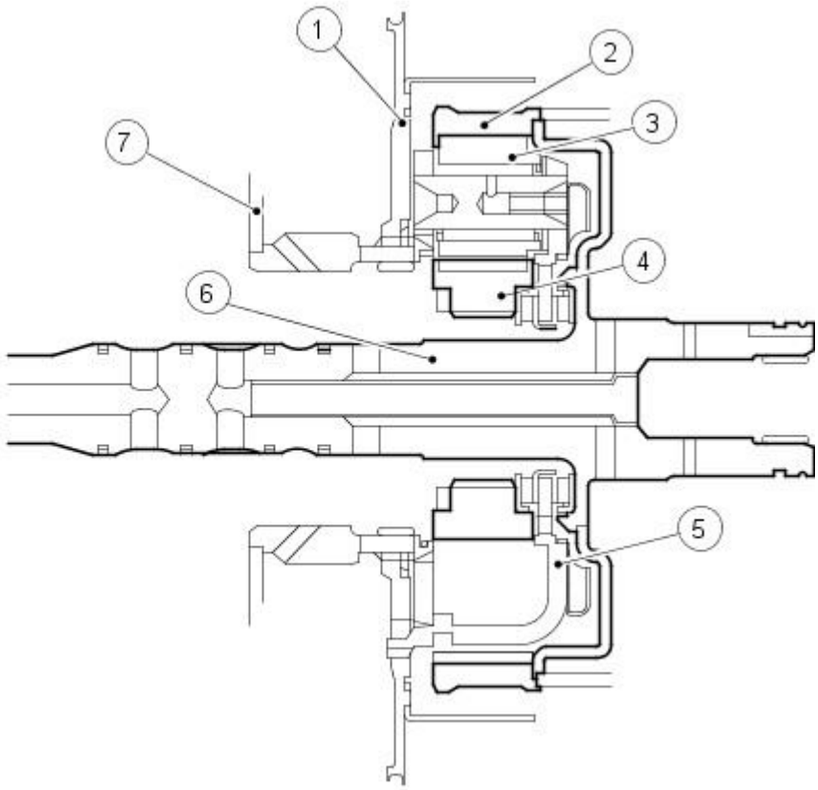

E31213

Item	Part Number	Description
1	-	Baffle plate A
2	-	Ring gear
3	-	Planetary gear 1
4	-	Sunwheel
5	-	Planetary gear spider
6	-	Turbine shaft
7	-	Cylinder A

Double Planetary Gearset

The double planetary gearset is splined to the output shaft.

The double planetary gear set consists of:

- 2 sunwheels of different sizes
- 3 short planetary gears meshing with the sunwheels
- 3 long planetary gears meshing with the sunwheels
- 1 planetary gear carrier
- 1 ring gear

Double Planetary Gearset

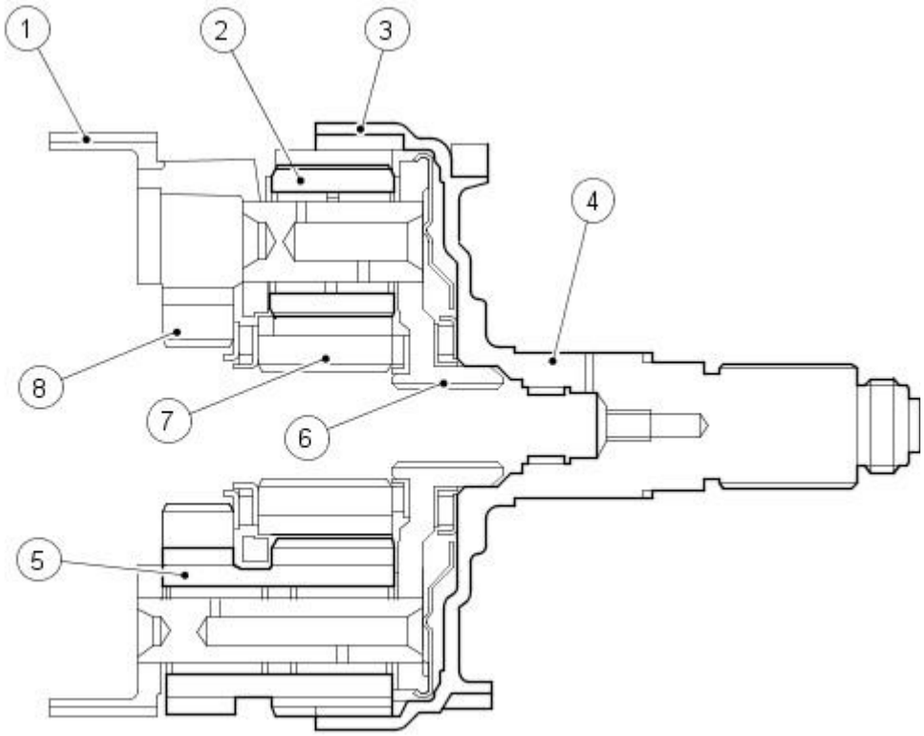

E31212

Item	Part Number	Description
1	-	Planetary gear spider brake D
2	-	Planetary gears (short)
3	-	Ring gear 2
4	-	Output
5	-	Double planetary gears (long)
6	-	Planetary gear spider clutch E
7	-	Sunwheel 3 clutch B
8	-	Sunwheel 2 clutch A

Apply Components

Shift Elements

The other shift elements in addition to the torque converter lock-up clutch are:

- three rotating multi-plate clutches A, B and E.
- two fixed multi-disc brakes C and D.

All gear shifts from 1st to 6th or from 6th to 1st are power-on overlapping shifts, that is to say during the shift one of the clutches must continue to transmit the drive at lower main pressure until the other clutch is able to accept the input torque.

The shift elements, clutches or brakes are engaged hydraulically. The transmission fluid pressure is built up between the cylinder and the piston, this presses the clutch plates together.

When the transmission fluid pressure drops, the cup spring pressing against the piston moves it back to its original position.

The purpose of these shift elements is to perform in-load shifts with no interruption to traction.

Multi-plate clutches A, B and E supply power from the engine to the planetary gear train; multi-disc brakes C and D bear against the transmission housing in order to achieve a torque reaction effect.

Shift Elements

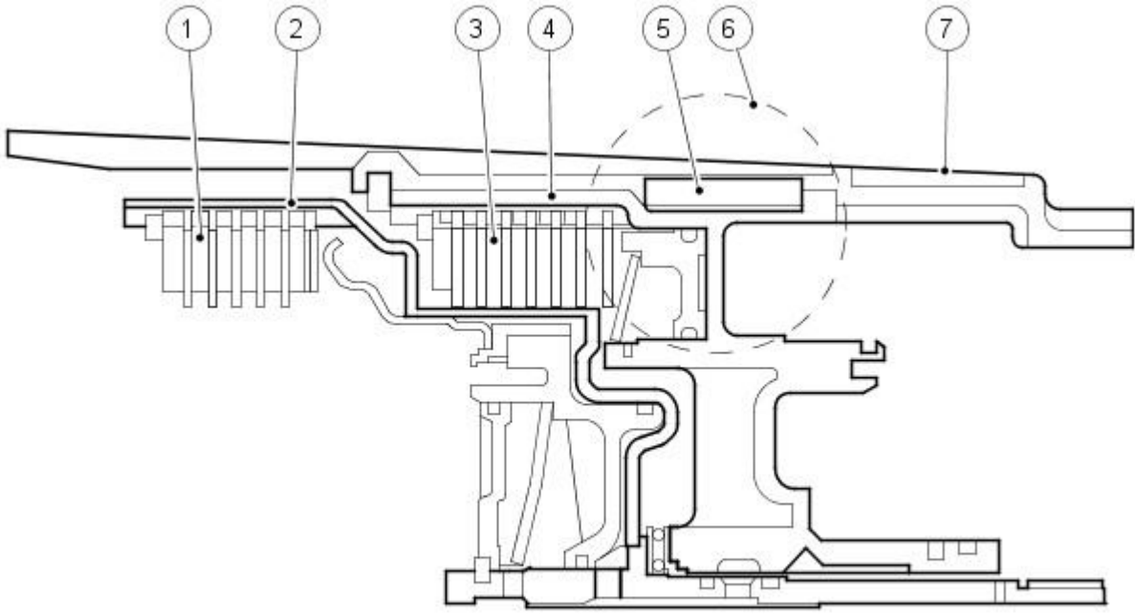

E31211

Item	Part Number	Description
1	-	Multi-plate clutch B
2	-	Clutch cylinder B, outer plate carrier
3	-	Multi-disc brake C
4	-	Brake cylinder C, outer plate carrier
5	-	Shaft key
6	-	Brake cylinder C, outer plate carrier
7	-	Transmission housing

Multi Plate Clutch

Clutch E is equalized in terms of dynamic pressure, that is to say its piston is exposed to the transmission fluid flow on both sides, in order to prevent pressure build up in the clutch as the speed increases. This equalization process is achieved by a baffle plate and pressure-free transmission fluid supply by a lubricating passage, through which the space between piston and baffle plate is filled with transmission fluid.

The advantages of this dynamic pressure equalization are:

- reliable clutch engagement and release in all speed ranges.
- improved shift refinement.

Multi Plate Clutch

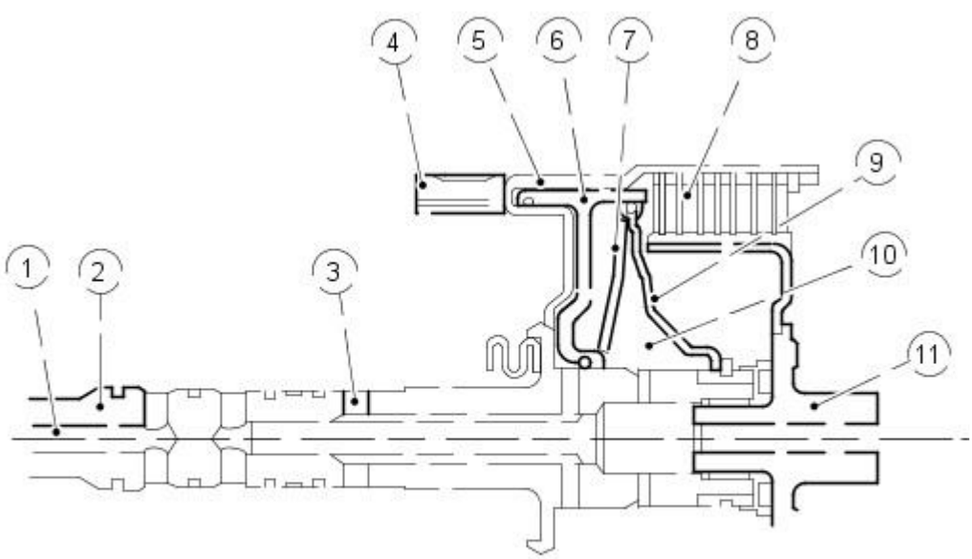

E31215

Item	Part Number	Description
1	-	Lubricating transmission fluid passage
2	-	Turbine shaft
3	-	Main pressure supply to clutch E
4	-	Ring gear
5	-	Cylinder E
6	-	Piston E
7	-	Cup spring

8	-	Clutch plate cluster
9	-	Baffle plate
10	-	Space for dynamic pressure equalization
11	-	Inner plate carrier E

Shift overlap control

When overlap gearshift takes place, freewheels (one-way clutches) are not used but are replaced by suitable actuation of the relevant clutches. This both enables weight and space to be saved.

The electronic-hydraulic shift action is obtained by means of various valves in the transmission control module (TCM) and main control valve body, actuated by pressure regulators. They engage or disengage the relevant clutches or brakes at the correct moments.

Output is always by the ring gear of the second, downstream planetary gear set.

Hydraulic System

Fluid Pump

The fluid pump is of a "half-moon" pattern and delivers approximately 16 square cm of transmission fluid per revolution.

It is located between the torque converter and the transmission housing.

The torque converter is supported in the fluid pump by a needle roller bearing. The fluid pump is driven directly from the engine by the torque converter shell and supplies transmission fluid to the transmission and the hydraulic control unit.

The fluid pump draws in transmission fluid through a filter and delivers it at high pressure to the main pressure valve in TCM and main control valve body unit. This valve adjusts the pressure and returns excess transmission fluid to the fluid pan.

Fluid Pump

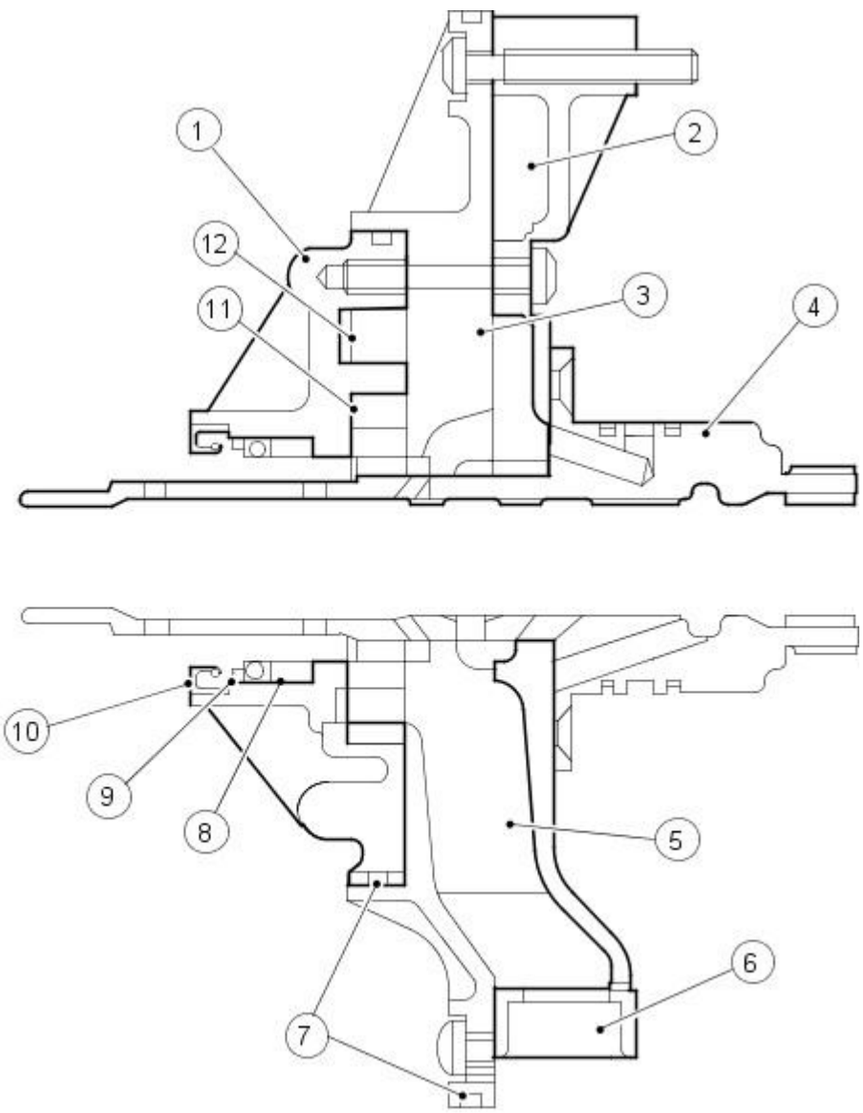

E31216

Item	Part Number	Description
1	-	Fluid pump housing
2	-	Intermediate plate
3	-	Centring plate
4	-	Stator shaft
5	-	Intake port
6	-	To mesh filter
7	-	Seal
8	-	Bearing
9	-	Retaining clip

10	-	Shaft seal
11	-	Impeller
12	-	Ring gear

Fluid Pan, Gasket and Filter

The transmission fluid pan, gasket and filter is a one piece assembly, all transmission fluid is drawn from the transmission fluid pan by the fluid pump and passes through the fluid filter.

Transmission Control Module (TCM) and Main Control Valve Body

Electrostatic Discharge (ESD)

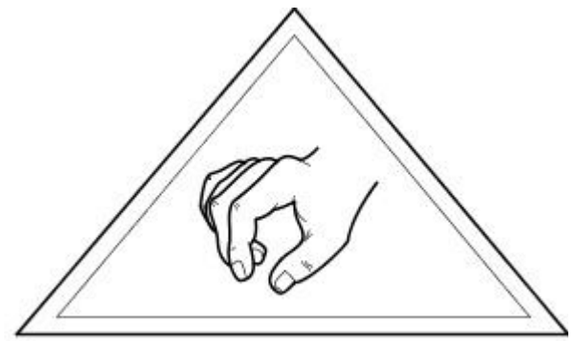

E31218

CAUTION: When working with the transmission control module (TCM) and main control valve body, all suitable safety precautions must be taken to protect the component against electrostatic discharge (ESD). Failure to follow these instructions may result in component damage.

Make sure all possible safety precautions are taken to protect the TCM and main control valve body unit against ESD.

Personal Wrist-Band Earthing

Earthing (grounding) by means of a wrist band or strap is the most reliable method of diverting electrostatic charges away from working personnel, and should therefore be used wherever possible, particularly if the person concerned is working while seated. The wrist band earthing (grounding) device consists of a bracelet closely attached to the wrist and a spiral earthing (grounding) cable connecting it to the earthing (grounding) contact point. This system must include a quick-release device so that the wrist can be released in the event of danger.

Shoes and Foot Earthing Straps

Electrically conductive shoes should be worn by persons who mainly work standing up or either standing or sitting in ESD protection zones, particularly if wrist band earthing (grounding) is impracticable. The standard calls for ESD shoes to record values between 0 and 35 Megga-ohms (MOhm) resistance. However, for antistatic working shoes resistance values between 0.1 and 1000 MOhm are called for, and a through-conducting resistance for protective shoes of 0.1 to 100 MOhm. A lower limit value of not less than 0.1 MOhm must be maintained on account of the contact voltage risk. For this reason the minimum value has been set contrary to the standard at the higher figure of 0.75 MOhm.

Transmission Control Module (TCM) and Main Control Valve Body

The transmission control module (TCM) and main control valve body is a combination of hydraulic and electronic control units. Both these modules are installed in the transmission, in the fluid pan.

This technical principle has the following advantages:

- Minimum tolerances (TCM is mated to solenoids)
- Better coordination of gear shifts
- Increased refinement
- Optimized shift quality
- Good reliability, since the number of plug connections and interfaces is reduced.

Transmission Control Module (TCM) and Main Control Valve Body

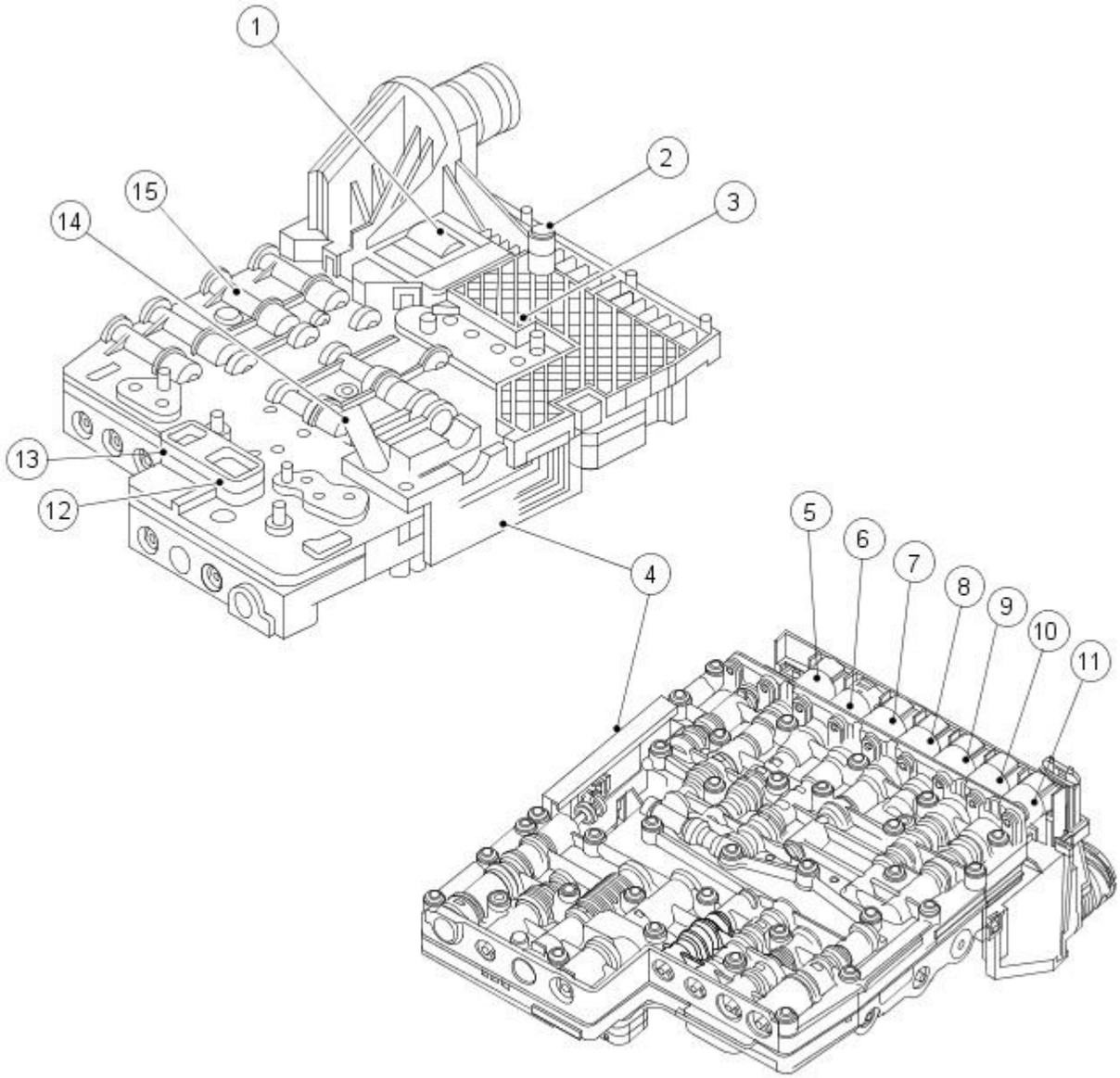

E31217

Item	Part Number	Description
1	-	TCM
2	-	Output speed sensor
3	-	Transmission fluid temperature sensor
4	-	Position switch
5	-	Pressure regulator 6
6	-	Solenoid valve
7	-	Pressure regulator 5
8	-	Pressure regulator 4
9	-	Pressure regulator 3
10	-	Pressure regulator 2
11	-	Pressure regulator 1
12	-	Discharge port
13	-	Suction port
14	-	Turbine speed sensor
15	-	Main control valve body

Transmission Electronic System

The transmission control module (TCM) and its input/output network control the following transmission operations:

- shift timing.
- line pressure (shift feel).
- torque converter clutch.

In addition, the TCM receives input signals from certain transmission-related sensors and switches. The TCM also uses these signals when determining transmission operating strategy.

Using all of these input signals, the TCM can determine when the time and conditions are right for a shift, or when to apply or release the torque converter clutch. It will also determine the pressure needed to optimize shift feel. To accomplish this the TCM uses six pressure control solenoids and one shift solenoid to control transmission operation.

The following provides a brief description of each of the sensors and actuators used to control transmission operation.

TCM

The TCM for the transmission is mounted on top of the main control valve body. The control module for the transmission has been designed to operate correctly in the environment in which the TCM is located.

The transmission control module is activated and deactivated by the ignition supply and is connected to the transmission link harness by a 16-way connector.

The TCM controls the operation of the transmission. The TCM processes information received in both analogue and digital form such as:

- Transmission input speed
- Output speed
- Throttle pedal position
- Gear selector position
- Engine torque
- Engine speed
- Transmission fluid temperature
- Brake pedal status
- Engine oil temperature
- Coolant temperature
- ABS wheel speed

This information is then used by the TCM to decide which shift pattern to select and for shift energy management. Electro-hydraulic solenoid valves and pressure regulators control the transmission gear changes.

Five pressure regulators and one solenoid valve are used to control direct transmission fluid flow to select internal clutches and control the fluid pressure at the clutch. A separate pressure regulator is used exclusively for torque converter clutch control.

The TCM monitors all TCM inputs and outputs to confirm correct system operation. If a fault occurs the TCM is able to perform default action and inform the driver of the problem, this is by the instrument cluster message centre.

Solenoids

The hydraulic module contains one solenoid valve. The solenoid valve is actuated by the TCM and has two positions of open or closed, it is used to switch the position valve.

There are six electronic pressure control valves, these convert an electric current into a proportional hydraulic pressure. They are energized by the TCM and actuate the valves belonging to the relevant switching elements.

Controller Area Network (CAN) Interface

For the TCM to be able to perform shift point and shift quality management a number of external signals are required. For shift point management alone the TCM requires output speed sensor, throttle pedal position, brake pedal status and gear selector position. The controller area network (CAN) bus is used to share information between control modules. The TCM obtains most of its required data over the CAN bus from the electronic engine controls, J-Gate and ABS, Instruments pack and diagnostic tools.

Brake Pedal Position (BPP) Switch

The brake pedal position (BPP) switch tells the TCM when the brakes are applied, and disengages torque converter clutch. The BPP switch closes when the brakes are applied and opens when they are released. The BPP is also used to disengage the brake shift interlock and stops gradient calculations.

Engine Coolant Temperature (ECT) Sensor

The engine coolant temperature (ECT) sensor detects engine coolant temperature and supplies the information to the TCM. The ECT sensor is used to control the torque converter clutch (TCC) operation.

Accelerator Pedal Position (APP) Sensor

The accelerator pedal position (APP) sensor is a potentiometer mounted on the accelerator pedal. The APP sensor detects the position of the accelerator pedal and sends this information to the electronic control module (ECM). The APP sensor is used for shift scheduling and TCC lock-up.

Input Shaft Speed (ISS) Sensor

The input shaft speed (ISS) sensor is a Hall effect type sensor.

The ISS sensor is mounted internally on the transmission and is located on the TCM and main control valve body unit.

Output Shaft Speed (OSS) Sensor

The output shaft speed (OSS) sensor is a Hall effect type sensor.

The OSS sensor is mounted internally on the transmission and is located on the TCM and main control valve body unit and is used for shift scheduling.

Transmission Fluid Temperature (TFT) Sensor

The TCM utilizes one transmission fluid temperature sensor located on the main control valve body. The TCM uses the sensor input to activate various shift strategies. The sensor is in the form of a temperature dependent resistor.

The temperature sensor performs plausibility checks on each sensor reading. Obviously, the transmission oil temperature should not jump in value excessively between sensor readings. If the inputs from the temperature sensor are outside the working range it possible that the sensor is short or open circuit.

Position sensor

The TCM uses the position of this switch housed on the TCM and main control valve body, to determine the selected gear range on the Automatic side of the selector lever.

The selector lever is connected to the transmission by a cable, which operates the transmission selector shaft between positions Park, Reverse, Neutral and Drive. The TCM detects the driver's choice of manual range selection (5,4,3,2) by means of a 3-bit code generated by the J-gate. This 3-bit code is then transformed in to a CAN message by the J-Gate module and transmitted on to the CAN bus where it is detected by the TCM.

3-Bit Code

Position	3-Bit Code		
2nd Gear	0	1	0
3rd Gear	0	1	1
4th Gear	1	0	0
5th Gear	1	0	1
P, R, N, D	1	1	1

The TCM uses this information to generate the CAN message "Gear Position Selected", which must not be confused with the similar message "Gear Position Actual" indicating the current mechanical gear ratio activated by the TCM.

Movement of the lever between Park, Reverse, Neutral and Drive manually controls the flow of transmission fluid, the TCM having control of the forward gear selected in Drive. Additional movement of the lever to 5,4,3 and 2 positions does not manually modify the fluid flow, the TCM detects these positions, and controls the gear selected electronically.

Sport mode switch

The sport mode switch:

- Allows the driver to select or de-select the automatic transmission sport mode.
- Allows the automatic transmission to operate normally when the sport mode is selected, but under acceleration the gear shift points are extended to make full use of the engine's power reserves.
- Allows the driver to drive the vehicle in the "D" position with the full automatic transmission shift or manually shift gears in the "second, third, fourth and fifth" positions.
- Is illuminated when Sport mode is selected.
- Communicates with the TCM through the CAN network to show the sport mode switch status.

TCM Monitoring Functions

As explained above the TCM monitors all input and outputs to identify possible failures. If a fault is detected the TCM takes the appropriate action to ensure the transmission enters a safe mode of operation, without sacrificing transmission durability or driver safety.

Supply Monitoring

If the battery voltage is either too great or too low, the TCM will detect a fault condition. For the TCM to be able to identify this fault, the engine must be running and the transmission fluid temperature sensor must be functioning correctly.

Solenoid Supply Monitoring

While the solenoid operating transistors are being activated, checks are run for open circuits, shorts circuits to ground and short circuits to supply. The monitoring function evaluates the voltage characteristics during the switch on process checking for the above faults.

All solenoid outputs are fully protected. The processor and the appropriate fail-safe action taken can quickly identify open and short circuit faults.

Sensor Supply Monitoring

The sensor supply voltage is a stabilized supply. This supply is monitored by the micro-processor by an Analogue to Digital Converter (ADC). If the voltage is out of the valid tolerance a raise a diagnostic trouble code (DTC) is set and the appropriate fail-safe action is performed.

Electronically Erasable Program Read Only Memory (EEPROM) Monitoring

To diagnose errors with the electronically erasable program read only memory (EEPROM) the TCM calculates 4 checksums continuously: If the processor identifies discrepancies in any of the four checksums the TCM will engage mechanical limp-home mode.

The TCM can diagnose errors within the EEPROM. Diagnosis is only performed during TCM initialization. There is no fail-safe mechanism associated with this function as the EEPROM is mainly used for the storage of fault codes and transmission calibration adaptions. If a fault occurs the TCM is able to perform default action and inform the driver of the problem, this is by the instrument cluster message centre.

Watchdog Monitoring

The watchdog monitoring function has two functions. Firstly it checks that it is possible to inhibit output control by the activation of the solenoid supply transistor. Secondly the watchdog checks that the safety circuit is functioning correctly.

During initialization the watchdog checks that it is possible to inhibit control of the pressure regulator and solenoid valves by switching the solenoid supply transistor. There is a fault if activation of the solenoids cannot be inhibited by the watchdog (NB. The supply to the solenoids can still be inhibited by the high side switch responsible for control of each solenoid i.e. One safety path is lost).

Monitoring the Substrate Temperature Sensor

The TCM is situated within the transmission on the valve body. As the TCM controls a number of high power solenoids and is surrounded by ATF, the TCM can obviously get very hot. If the temperature of the hardware rises above a pre-determined level the TCM will be shut down. Prior to the TCM shutting down the TCM will log a fault code, during shutdown the transmission will enter mechanical limp-home mode. Monitoring of the substrate temperature is performed by a temperature dependent resistor mounted on the processor.

Plausibility Checking

The TCM detects a fault if an excessive voltage jump is identified between any two consecutive measurements. Also, with the engine started from cold the transmission fluid temperature will start to rise. Therefore the substrate or fluid temperature will also start to rise because the TCM is surrounded by transmission fluid. If the engine and output shaft speed is higher than a set threshold for a predetermined length of time without the substrate temperature rising above a set threshold a fault will be detected.

Pressure Regulator/Solenoid Monitoring

Each pressure regulator and solenoid is monitored for open circuits and short circuits. The TCM also checks that the current being delivered to each solenoid valve or pressure regulator is within valid limits. When each solenoid is being driven with minimum current the TCM checks that the current is not above a threshold value. If a solenoid is being driven with maximum current, it checks that the current is not below a valid threshold. If either of these two errors occurs a plausibility error is logged and the appropriate fail-safe action is performed.

Output Speed Monitor

It is possible for the TCM to diagnose electrical errors associated with the output speed sensor while the vehicle is stationary as well as

moving. Plausibility monitoring is performed on the sensor output when the vehicle is moving.

Input Speed Monitor

It is possible for the TCM to diagnose electrical errors associated with the input shaft speed sensor while the vehicle is stationary as well as moving. Plausibility monitoring is performed on the sensor output when the vehicle is moving.

Transmission Fluid Temperature Sensor Monitoring

The TCM monitors for faults associated with the transmission fluid temperature sensor in the following ways:

1. **1.** Open and short circuit fault detection.
2. **2.** The temperature cannot alter by more than a predefined differential between any two consecutive measurements.
3. **3.** The transmission fluid temperature must rise after the engine has been started provided that the fluid temperature was low enough to begin with (The vehicle must be driven and the diagnostic test condition met).

Position Sensor Monitoring

The TCM can identify errors with the position switch located within the transmission. If an unrecognized position code is read by the TCM a plausibility fault will be logged. (A code is checked between positions).

The position switch outputs a 4-bit code to the TCM, the bits being labelled L1-L4. For the transmission, the following codes are used to identify the selector position.

Only for the automatic side of the J-GATE P,R,N,D

Selector position switch code

Position	Code			
	L1	L2	L3	L4
Park	0	0	1	0
Reverse	0	0	0	1
Neutral	0	1	0	0
Drive	1	1	1	0

Gear Ratio Monitoring

The gear ratio diagnostic checks that each gear ratio is correctly engaged. Also, following a gear shift the diagnostic checks that the transmission has engaged the target gear within the allowed time.

Torque Converter Monitoring

The TCM checks that the torque converter can be locked correctly. If torque converter lock-up does not occur correctly the TCM performs the appropriate fail-safe action of opening the Torque converter clutch.

Torque Converter Lock-up Control

The TCM controls how the torque converter clutch is engaged as a function of the accelerator pedal position , output speed, transmission fluid temperature, gear selected and shift program. Lock-up is possible in all forward gears, but usually it is restricted to fourth, fifth and sixth gears. To make use of the comfort enhancing effect of the torque converter, the converter clutch can be disengaged prior to a downshift or up-shift. The torque converter lock up clutch is always modulated to allow for controlled slip, to further improve the shift quality.

Shift Energy Management

This function involves reducing or increasing the engine output torque during shifting. The aim when up-shifting is to reduce the energy that is dissipated in the friction elements of the transmission. This is done by reducing the engine torque during synchronization without interrupting the tractive drive. This function may be used for:

- Increasing the transmission service life by shortening the slipping time.
- Improving the shift comfort by reducing the step change in torque caused by the gearshift.
- Transferring a higher engine power, this is allowed by the mechanical in-gear strength of the transmission.

Real-time control of engine torque is required to maintain maximum shift quality and transmission durability. The TCM has the ability to control the engine output torque during the gearshift to synchronize with the operation of the transmission clutches.

Pressure Modulation

To provide a high level of shift comfort and durability, the hydraulic pressure in the shift related friction elements of the transmission must be matched very accurately to the transmission input torque. This hydraulic pressure is composed of a hydraulically pre-set basic pressure and a controlling pressure that is set by one of the electro-hydraulic pressure regulators.

The transmission input torque can be directly calculated from the following operating parameters: engine torque signals, engine speed or any signals transmitted from the ECM by CAN, and converter slip. Separate pressure characteristics for each gear change make it possible to adapt precisely to the particular shift operation. A further improvement in shift comfort is achieved by individual treatment of special cases, such as manual shifts.

Shift Quality Adapts

The shift quality adapts are used to obtain a high quality and consistant shift feel. This is achieved through monitoring shift quality and then adapting the shift pressures and shift energy management to overcome hardware variability and "in service wear".

It will typically take a new transmission approximately 161 kilometers (100 miles) of use to fully adapt.

Shift Point Selection

The gearshift points are selected by the TCM, as a function of the output speed, accelerator pedal position, selector position and shift program selected. The driver has control over the shift points by the selector lever, accelerator pedal movement and mode switch.

Transmission Shift selection

Shift Map Selection

The transmission control system utilizes a number of driver selectable operating modes and also a number of adaptive/automatically selectable modes. Sport, Normal and Cruise Control mode are all driver selectable. Hot mode, traction control mode and trailer towing mode are all adaptive modes i.e. the transmission will automatically select this mode dependent upon the current driving conditions.

Normal Mode

Normal mode can be selected by activation of the transmission mode switch located on the J-Gate. Once activated this mode will remain engaged until the driver deselects the mode or engages the cruise control system. If the driver engages cruise control when Normal mode is active upon deactivation of the cruise system the transmission will automatically re-engage Normal mode. This mode can be over-ridden by a number of adaptive modes.

The mode switch is of the momentary type.

Cruise Mode

When the driver engages the cruise control system the TCM receives a CAN message transmitted by the Adaptive Cruise Control (ACC) or engine electronic controls which informs the TCM that cruise control is currently active. Upon receipt of this message the TCM selects a new transmission shift map. This map has been developed to reduce busy gearshift during cruise mode. It has also been developed to increase fuel economy.

Hot Mode

This is one of the adaptive modes the transmission can enter when conditions are correct. When the transmission fluid temperature, chip temp, engine oil temp or coolant temperature becomes hot enough to reach threshold values, the TCM will cause the transmission to enter Hot mode. This mode will automatically engage new shift and lock-up maps to reduce heat generated within the transmission. The shift map will enable the transmission to change to higher gears at lower vehicle speeds and the lock-up map will engage the lock-up clutch at lower vehicle speeds and in lower gears. The effect of this is that less heat will be generated within the transmission due to the effects of lock-up clutch slip and churning effects. There will be forced upshift strategy used in hot mode. To exit hot mode the selector lever must be moved or the brake pedal applied or the accelerator pedal applied 100%, during all of these methods of exiting from hot mode the fluid temperature must be lower than the threshold values.

Traction Control Mode

Traction Control Mode is an adaptive mode, which is automatically engaged when a traction event occurs. When driving on slippery surfaces (i.e.sand, ice) it is possible for the driven wheels to begin to spin. The TCM believes the vehicle speed is increasing and therefore it may begin to upshift. These upshifts reduce the torque at the wheel and so tend to reduce wheel slip. The downshift lines are forced downwards to prevent unwanted shifts. To reduce the effects of this, if a traction event occurs a signal is transmitted by the ABS module to the TCM over the CAN network, the TCM uses this signal to change the currently selected shift map. The new shift map will have gearshift lines further apart, thus inhibiting the transmission shifting to a lower gear.

Hill/Trailer Towing Mode

This is an adaptive mode. When the TCM detects reduced vehicle acceleration for a certain percentage of throttle opening then this mode is automatically engaged by the TCM. When this mode is engaged a new shift map and torque converter lock-up map is selected. This new shift map is designed to reduce the number of gearshifts when towing a trailer or with the car climbing a steep hill. The shift map will cause the transmission to hold on to gears for longer this increases acceleration and reduces the number of gearshifts. This mode can also give an advantage when driving at high altitudes, where the torque produced by an engine is greatly reduced by the effects of reduced ambient pressure and airflow.

Driving Mode Priority

Each of the above modes has an associated priority i.e. Normal mode cannot over-ride cruise mode etc.

Adaptive Shift Strategies

The TCM of the six speed ZF automatic transmission incorporates adaptive strategies which improve the accessibility of the vehicle`s performance in driving conditions while maintaining a relaxed driving experience when cruising.

In "Sport" mode, accelerator pedal usage and cornering behaviour are monitored to assess driving style and road conditions. When an enthusiastic driving style or a demanding road is detected, 6th gear is inhibited and the lower gears are made slightly more accesssible in order to prevent unwanted "hunting" between gears. Conversely, when cruising conditions are detected, 6th gear is once again made available to maximise driving refinement and economy.

Under conditions of heavy braking, the transmission will perform one or more downshifts to improve response to a subsequent accelerator pedal application. Similarly if the accelerator pedal is released rapidly following hard acceleration, one or more upshifts are inhibited to increase engine braking and also improve subsequent response.

To complement these features, when a corner is detected transmission upshifts are inhibited. This inhibition is also maintained for a short distance after the corner allowing the driver to achieve a smooth balance through the bend without unwanted shifting mid-corner.

Safety features

The safety functions are designed to safeguard against mis-operation by the driver as well as against system malfunctions. The mis-operation system prevents reverse gear from being engaged at high forward speeds (Above 5 kph) and prevents manual downshifting at excessive engine speeds.

Great attention has been paid to safeguarding against, and detecting, malfunctions in the electronic control system. The design of the electrical and diagnostic system is such that system integrity is protected at all times.

The hydraulic system has "fail-safe" characteristics regarding its electrical energisation, i.e. as a result of the power supply being lost to the electro-hydraulic actuators the transmission engages a reliable emergency gear ratio to facilitate a basic limp-home mode.

Recognition of critical shift operation by monitoring the last element in the signal path, i.e. the solenoid valve, and checking by means of redundant measured variables, i.e. engine speed, input speed and output speed.

Measures are in place which guarantee a high degree of availability of safeguard functions, i.e. monitoring of safety circuits. For this purpose each time the vehicle is started there is a check on the entire safety hardware, this is during TCM initialization and the associated program parts and signal paths used during the TCM operation status. A malfunction in this part of the system, or triggering of the safety circuit, will be communicated to the driver by the instrument cluster message centre.

Automatic Transmission / Transaxle - Diagnostic Strategy

Diagnosis and Testing

The complexity of the electronics involved with the automatic transmission preclude the use of workshop general electrical test equipment. Therefore, reference should be made to the Jaguar approved diagnostic system for detailed instructions on testing the automatic transmission.

Where a fault involving the automatic transmission is indicated by the Jaguar approved diagnostic system, some basic diagnostic methods may be necessary to confirm that connections are good and that the wiring is not damaged, before installing new components.

1. **1.** Verify the customer concern by operating the vehicle. Refer to the automatic transmission diagnostic drive cycle in the DTC summary section.
2. **2.** Check the fluid levels and condition of the fluid.
3. **3.** Check for non-factory fitted items.
4. **4.** Check the selector lever cable for correct adjustment.
   REFER to Section 307-05 Automatic Transmission/Transaxle External Controls.
5. **5.** Visually inspect for obvious signs of mechanical, electrical or hydraulic damage:

Visual Inspection Chart

Mechanical	Electrical	Hydraulic
○ Damaged shift mechanism/linkages ○ Damaged automatic transmission casing	○ Blown fuse ○ Wiring harness ○ Damaged Transmission Control Module (TCM) ○ Damaged rotary switch ○ Damaged, loose or corroded connectors	○ Fluid level too high/low ○ Poor condition of fluid ○ Fluid leak

Basic diagnosis

Check Fluid Level and Condition

CAUTION: The vehicle should not be driven if the fluid level is low as internal failure can result.

• NOTE: The transmission oil temperature must not be allowed to exceed 50 °C (122 °F) whilst checking level. Should the temperature rise above this figure, abort the check and allow the transmission oil to cool to below 30°C (86°F).

This vehicle is not equipped with a fluid level indicator. An incorrect level may affect the transmission operation and could result in transmission damage. To correctly check and add fluid to the transmission,
REFER to Transmission Fluid Level Check in this section.

High Fluid Level

A fluid level that is too high may cause the fluid to become aerated due to the churning action of the rotating internal parts. This will cause erratic control pressure, foaming, loss of fluid from the vent tube and possible transmission damage. If an overfill reading is indicated, refer to Transmission Fluid Drain and Refill in this section.

Low Fluid Level

A low fluid level could result in poor transmission engagement, slipping, or damage. This could also indicate a leak in one of the transmission seals or gaskets.
REFER to Transmission Fluid Level Check in this section.

Adding Fluid

CAUTION: The use of any other type of transmission fluid than specified can result in transmission damage.

If fluid needs to be added, add fluid in 0.50 liter increments through the fill hole opening. Do not overfill the fluid. For fluid type, refer to the General Specification chart in this section.
REFER to Transmission Fluid Level Check in this section.

Fluid Condition Check

1. **1.** Check the fluid level. For additional information,
   REFER to Transmission Fluid Drain and Refill in this section.
2. **2.** Observe the color and the odor. The color under normal circumstances should be reddish, not brown or black.
3. **3.** Allow the fluid to drip onto a facial tissue and examine the stain.
4. **4.** If evidence of solid material is found, the transmission fluid pan should be removed for further inspection.

NOTE: In the event of a transmission unit replacement for internal failure, the oil cooler and pipes must also be replaced.

Shift Linkage Check

Hydraulic leakage at the manual control valve can cause delay in engagements and/or slipping while operating if the linkage is not correctly adjusted; for selector lever cable adjustment,
REFER to Section 307-05 Automatic Transmission/Transaxle External Controls.

Diagnostic Trouble Code Chart

Five Digit DTC	Description	Action
P0725	Engine speed signal fault. CAN network or engine	REFER to Section 418-00 Module Communications Network.,

Five Digit DTC	Description	Action
	management fault.	REFER to Section 303-14 Electronic Engine Controls. Or REFER to Section 303-14 Electronic Engine Controls.
P1796	CAN Bus off line or network fault. CAN network or module fault.	REFER to Section 418-00 Module Communications Network.
P0710	Transmission fluid temperature signal fault. Transmission fluid temperature sensor open or short circuit.	CLEAR ALL DTC's. TEST the system for normal operation. If DTC resets, install a new TCM and Main Control Valve Body. For additional information, REFER to Transmission Control Module (TCM) and Main Control Valve Body in this section.
P0701	Combination of DTC's present. Impossible substrate functions.	CLEAR ALL DTC's. TEST the system for normal operation.
P1603	EEPROM Communications / Internal error.	CLEAR ALL DTC's. TEST the system for normal operation. If DTC resets, install a new TCM and Main Control Valve Body. For additional information, REFER to Transmission Control Module (TCM) and Main Control Valve Body in this section.
P0605	EEPROM /FLASH checksum.	• NOTE: If DTC has been logged after a new TCM has been fitted and flashed, an error has occurred during the process. Check the file used for flashing process is correct and repeat the flash process. CLEAR ALL DTC's. TEST the system for normal operation. If DTC resets, install a new TCM and Main Control Valve Body. For additional information, REFER to Transmission Control Module (TCM) and Main Control Valve Body in this section.
P1719	Engine torque signal fault or CAN message. CAN network or engine management fault.	REFER to Section 418-00 Module Communications Network., REFER to Section 303-14 Electronic Engine Controls. Or REFER to Section 303-14 Electronic Engine Controls.
P0720	Output shaft speed signal fault. Output shaft speed sensor open or short circuit.	Compare output shaft speed sensor speed to wheel speed sensor speed. REFER to Section 206-09 Anti-Lock Control - Stability Assist. CLEAR ALL DTC's. TEST the system for normal operation. Carry out a drive cycle test with harsh shifts and rapid deceleration. If DTC resets, install a new TCM and Main Control Valve Body. For additional information, REFER to Transmission Control Module (TCM) and Main Control Valve Body in this section.
P0715	Turbine speed signal fault. Turbine shaft speed sensor open or short circuit.	CLEAR ALL DTC's. TEST the system for normal operation. If DTC resets, install a new TCM and Main Control Valve Body. For additional information, REFER to Transmission Control Module (TCM) and Main Control Valve Body in this section.
P0711	Transmission fluid temperature monitoring fault. Transmission fluid temperature sensor out of range.	CLEAR ALL DTC's. TEST the system for normal operation. If DTC resets, install a new TCM and Main Control Valve Body. For additional information, REFER to Transmission Control Module (TCM) and Main Control Valve Body in this section.
P0705	Transmission position switch fault. Transmission position switch open or short circuit.	CLEAR ALL DTC's. TEST the system for normal operation. If DTC resets, install a new TCM and Main Control Valve Body. For additional information, REFER to Transmission Control Module (TCM) and Main Control Valve Body in this section.
P1783	Over temperature shutdown. Transmission overheated.	REFER to Section 307-02 Transmission/Transaxle Cooling.
P1794	Transmission power supply fault. Transmission power supply open or short circuit.	Refer to Visual Inspection Chart in this section.
P0610	Engine control module (ECM) and TCM fault. Incorrect configuration or calibration loaded for ECM and TCM.	• NOTE: If DTC has been logged after a new TCM has been fitted and flashed, an error has occurred during the process. Check the file used for flashing process is correct and repeat the flash process. CHECK the ECM and TCM for correct software configuration and calibration. CLEAR ALL DTC's. TEST the system for normal operation.
P0651	Transmission pressure regulator and solenoid fault. Transmission pressure regulator and solenoid supply open or short circuit.	CLEAR ALL DTC's. TEST the system for normal operation. If DTC resets, install a new TCM and Main Control Valve Body. For additional information, REFER to Transmission Control Module (TCM) and Main Control Valve Body in this section.
P0606	Watchdog monitoring locking mechanism.	CLEAR ALL DTC's. TEST the system for normal operation. If DTC resets, install a new TCM and Main Control Valve Body. For additional information, REFER to Transmission Control Module (TCM) and Main Control Valve Body in this section.
P0741	Torque converter clutch (TCC) fault. TCC stuck open position.	CLEAR ALL DTC's. TEST the system for normal operation. If DTC resets, install a new torque converter.
P0750	Transmission pressure regulator 1 fault. Transmission pressure regulator 1 supply open or short circuit.	CLEAR ALL DTC's. TEST the system for normal operation. If DTC resets, install a new TCM and Main Control Valve Body. For additional information, REFER to Transmission Control Module (TCM) and Main Control Valve Body in this section.
P0753	Transmission pressure regulator 1 fault. Transmission pressure regulator 1 failed plausibility check.	CLEAR ALL DTC's. TEST the system for normal operation. If DTC resets, install a new TCM and Main Control Valve Body. For additional information, REFER to Transmission Control Module (TCM) and Main Control Valve Body in this section.
P0755	Transmission pressure regulator 2 fault. Transmission pressure regulator 2 supply open or short circuit.	CLEAR ALL DTC's. TEST the system for normal operation. If DTC resets, install a new TCM and Main Control Valve Body. For additional information, REFER to Transmission Control Module (TCM) and Main Control Valve Body in this section.
P0758	Transmission pressure regulator 2 fault. Transmission pressure regulator 2 failed plausibility check.	CLEAR ALL DTC's. TEST the system for normal operation. If DTC resets, install a new TCM and Main Control Valve Body. For additional information, REFER to Transmission Control Module (TCM) and Main Control Valve Body in this section.
P0760	Transmission pressure regulator 3 fault. Transmission pressure regulator 3 supply open or short circuit.	CLEAR ALL DTC's. TEST the system for normal operation. If DTC resets, install a new TCM and Main Control Valve Body. For additional information, REFER to Transmission Control Module (TCM) and Main Control Valve Body in this section.

Five Digit DTC	Description	Action
P0763	Transmission pressure regulator 3 fault. Transmission pressure regulator 3 failed plausibility check.	CLEAR ALL DTC's. TEST the system for normal operation. If DTC resets, install a new TCM and Main Control Valve Body. For additional information, REFER to Transmission Control Module (TCM) and Main Control Valve Body in this section.
P0765	Transmission pressure regulator 4 fault. Transmission pressure regulator 4 supply open or short circuit.	CLEAR ALL DTC's. TEST the system for normal operation. If DTC resets, install a new TCM and Main Control Valve Body. For additional information, REFER to Transmission Control Module (TCM) and Main Control Valve Body in this section.
P0768	Transmission pressure regulator 4 fault. Transmission pressure regulator 4 failed plausibility check.	CLEAR ALL DTC's. TEST the system for normal operation. If DTC resets, install a new TCM and Main Control Valve Body. For additional information, REFER to Transmission Control Module (TCM) and Main Control Valve Body in this section.
P0770	Transmission pressure regulator 5 fault. Transmission pressure regulator 5 supply open or short circuit.	CLEAR ALL DTC's. TEST the system for normal operation. If DTC resets, install a new TCM and Main Control Valve Body. For additional information, REFER to Transmission Control Module (TCM) and Main Control Valve Body in this section.
P0773	Transmission pressure regulator 5 fault. Transmission pressure regulator 5 failed plausibility check.	CLEAR ALL DTC's. TEST the system for normal operation. If DTC resets, install a new TCM and Main Control Valve Body. For additional information, REFER to Transmission Control Module (TCM) and Main Control Valve Body in this section.
P0740	Transmission pressure regulator 6 fault. Transmission pressure regulator 6 supply open or short circuit.	CLEAR ALL DTC's. TEST the system for normal operation. If DTC resets, install a new TCM and Main Control Valve Body. For additional information, REFER to Transmission Control Module (TCM) and Main Control Valve Body in this section.
P0743	Transmission pressure regulator 6 failed plausibility check.	CLEAR ALL DTC's. TEST the system for normal operation. If DTC resets, install a new TCM and Main Control Valve Body. For additional information, REFER to Transmission Control Module (TCM) and Main Control Valve Body in this section.
P0787	Transmission shift solenoid valve 1 fault. Transmission shift solenoid valve 1 supply open or short circuit.	CLEAR ALL DTC's. TEST the system for normal operation. If DTC resets, install a new TCM and Main Control Valve Body. For additional information, REFER to Transmission Control Module (TCM) and Main Control Valve Body in this section.
P0788	Transmission shift solenoid valve 1 fault. Transmission shift solenoid valve 1 failed plausibility check.	CLEAR ALL DTC's. TEST the system for normal operation. If DTC resets, install a new TCM and Main Control Valve Body. For additional information, REFER to Transmission Control Module (TCM) and Main Control Valve Body in this section.
P0730	Selection fault in all transmission gears. Internal transmission gear ratio fault.	Carry out the transmission fluid check in this section. CLEAR ALL DTC's. Carry out a drive cycle test.
P0731	1st gear selection fault. Internal transmission gear ratio fault.	Carry out the transmission fluid check in this section. CLEAR ALL DTC's. TEST the system for normal operation. If DTC resets, install a new Transmission. For additional information, REFER to Transmission in this section.
P0732	2nd gear selection fault. Internal transmission gear ratio fault.	Carry out the transmission fluid check in this section. CLEAR ALL DTC's. TEST the system for normal operation. If DTC resets, install a new Transmission. For additional information, REFER to Transmission in this section.
P0733	3rd gear selection fault. Internal transmission gear ratio fault.	Carry out the transmission fluid check in this section. CLEAR ALL DTC's. TEST the system for normal operation. If DTC resets, install a new Transmission. For additional information, REFER to Transmission in this section.
P0734	4th gear selection fault. Internal transmission gear ratio fault.	Carry out the transmission fluid check in this section. CLEAR ALL DTC's. TEST the system for normal operation. If DTC resets, install a new Transmission. For additional information, REFER to Transmission in this section.
P0735	5th gear selection fault. Internal transmission gear ratio fault.	Carry out the transmission fluid check in this section. CLEAR ALL DTC's. TEST the system for normal operation. If DTC resets, install a new Transmission. For additional information, REFER to Transmission in this section.
P0729	6th gear selection fault. Internal transmission gear ratio fault.	Carry out the transmission fluid check in this section. CLEAR ALL DTC's. TEST the system for normal operation. If DTC resets, install a new Transmission. For additional information, REFER to Transmission in this section.
P0780	Gear load fault in all transmission gears. Incorrect calculation during gear shift.	Carry out the transmission fluid check in this section. CLEAR ALL DTC's. TEST the system for normal operation. If DTC resets, install a new Transmission. For additional information, REFER to Transmission in this section.
P0781	Gear load fault from 1st to 2nd gear. Incorrect calculation during gear shift.	Carry out the transmission fluid check in this section. CLEAR ALL DTC's. TEST the system for normal operation. If DTC resets, install a new Transmission. For additional information, REFER to Transmission in this section.
P0782	Gear load fault from 2nd to 3rd gear. Incorrect calculation during gear shift.	Carry out the transmission fluid check in this section. CLEAR ALL DTC's. TEST the system for normal operation. If DTC resets, install a new Transmission. For additional information, REFER to Transmission in this section.
P0783	Gear load fault from 3rd to 4th gear. Incorrect calculation during gear shift.	Carry out the transmission fluid check in this section. CLEAR ALL DTC's. TEST the system for normal operation. If DTC resets, install a new Transmission. For additional information, REFER to Transmission in this section.
P0784	Gear load fault from 4th to 5th gear. Incorrect calculation during gear shift.	Carry out the transmission fluid check in this section. CLEAR ALL DTC's. TEST the system for normal operation. If DTC resets, install a new Transmission. For additional information, REFER to Transmission in this section.
P0829	Gear load fault from 5th to 6th gear. Incorrect calculation during gear shift.	Carry out the transmission fluid check in this section. CLEAR ALL DTC's. TEST the system for normal operation. If DTC resets, install a new Transmission. For additional information, REFER to Transmission in this section.

Five Digit DTC	Description	Action
P0781	Gear load fault from 2nd to 1st gear. Incorrect calculation during gear shift.	Carry out the transmission fluid check in this section. CLEAR ALL DTC's. TEST the system for normal operation. If DTC resets, install a new Transmission. For additional information, REFER to Transmission in this section.
P0782	Gear load fault from 3rd to 2nd gear. Incorrect calculation during gear shift.	Carry out the transmission fluid check in this section. CLEAR ALL DTC's. TEST the system for normal operation. If DTC resets, install a new Transmission. For additional information, REFER to Transmission in this section.
P0783	Gear load fault from 4th to 3rd gear. Incorrect calculation during gear shift.	Carry out the transmission fluid check in this section. CLEAR ALL DTC's. TEST the system for normal operation. If DTC resets, install a new Transmission. For additional information, REFER to Transmission in this section.
P0784	Gear load fault from 5th to 4th gear. Incorrect calculation during gear shift.	Carry out the transmission fluid check in this section. CLEAR ALL DTC's. TEST the system for normal operation. If DTC resets, install a new Transmission. For additional information, REFER to Transmission in this section.
P0829	Gear load fault from 6th to 5th gear. Incorrect calculation during gear shift.	Carry out the transmission fluid check in this section. CLEAR ALL DTC's. TEST the system for normal operation. If DTC resets, install a new Transmission. For additional information, REFER to Transmission in this section.
P1798	CAN network timed out to instrument cluster. CAN network fault.	REFER to Section 418-00 Module Communications Network.
P1797	CAN network timed out to engine management system. CAN network fault.	REFER to Section 303-14 Electronic Engine Controls. Or REFER to Section 303-14 Electronic Engine Controls.
P0702	Electrical system undervoltage. Charging fault whilst engine is running.	REFER to Section 414-00 Battery and Charging System - General Information.
P1774	CAN network timed out to J-Gate. CAN network fault.	REFER to Section 418-00 Module Communications Network.
P1799	CAN network timed out to ABS system. CAN network fault.	REFER to Section 418-00 Module Communications Network.
P1749	Invalid Park and Neutral signal. Starter motor inoperative.	REFER to Section 303-06 Starting System.
P0666	Substrate temperature sensor fault. Substrate temperature sensor open or short circuit.	CLEAR ALL DTC's. TEST the system for normal operation. Carry out a drive cycle test. If DTC resets, install a new TCM and Main Control Valve Body. For additional information, REFER to Transmission Control Module (TCM) and Main Control Valve Body in this section.
P0641	All sensor's supply voltage fault.	CLEAR ALL DTC's. TEST the system for normal operation. If DTC resets, install a new TCM and Main Control Valve Body. For additional information, REFER to Transmission Control Module (TCM) and Main Control Valve Body in this section.
P1605	TCM fault. Battery buffered RAM.	CLEAR ALL DTC's. TEST the system for normal operation. If DTC resets, install a new TCM and Main Control Valve Body. For additional information, REFER to Transmission Control Module (TCM) and Main Control Valve Body in this section.
P0706	Implausible J-Gate position. No manual selection of gears.	REFER to Section 307-05 Automatic Transmission/Transaxle External Controls.
P0825	J-gate position fault on the manual side of the J-Gate.	CLEAR ALL DTC's. TEST the system for normal operation. If DTC resets, INSTALL new components as necessary.
P0709	Intermediate J-Gate position.	CLEAR ALL DTC's. TEST the system for normal operation. If DTC resets, INSTALL new components as necessary.

Transmission Link Harness Electrical Connector Layout

Electrostatic Discharge

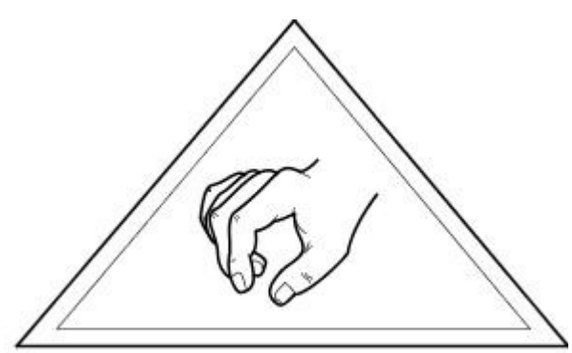

E31218

CAUTION: When working with the transmission control module (TCM) and main control valve body, all suitable safety precautions must be taken to protect the component against electrostatic discharge. Failure to follow these instructions may result in component damage.

Make sure all possible safety precautions are taken to protect the TCM and main control valve body unit against electrostatic discharge

Personal Wrist-Band Earthing

Earthing (grounding) by means of a wrist band or strap is the most reliable method of diverting electrostatic charges away from working personnel, and should therefore be used wherever possible, particularly if the person concerned is working while seated. The wrist band earthing (grounding) device consists of a bracelet closely attached to the wrist and a spiral earthing (grounding) cable connecting it to the earthing (grounding) contact point. This system must include a quick-release device so that the wrist can be released in the event of danger.

Shoes and Foot Earthing Straps

Electrically conductive shoes should be worn by persons who mainly work standing up or either standing or sitting in ESD protection zones, particularly if wrist band earthing (grounding) is impracticable. The standard calls for ESD shoes to record values between 0 and 35 Megga-ohms (MOhm) resistance. However, for antistatic working shoes resistance values between 0.1 and 1000 MOhm are called for, and a through-conducting resistance for protective shoes of 0.1 to 100 MOhm. A lower limit value of not less than 0.1 MOhm must be maintained on account of the contact voltage risk. For this reason the minimum value has been set contrary to the standard at the higher figure of 0.75 MOhm.

Transmission Link Harness Electrical Connector Layout

• CAUTIONS:

When working with the transmission control module (TCM) and main control valve body, all suitable safety precautions must be taken to protect the component against electrostatic discharge.

Do not carry out any electrical tests on the TCM and main control valve body. Failure to follow these instructions may result in component damage.

Make sure all suitable safety precautions are taken to protect the transmission control module (TCM) and main control valve body electrical connector pins against electrostatic discharge.

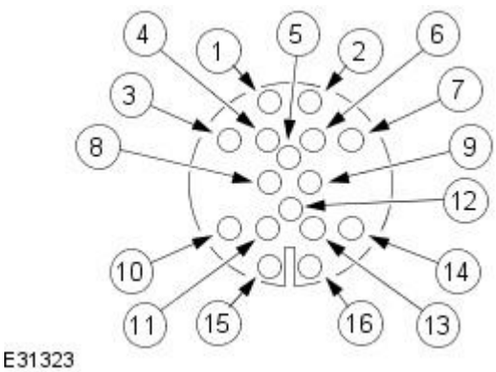

Transmission Link Harness Electrical Connector

Pin No	Description
1	Not used
2	CAN Low
3	Not used
4	Not used
5	Not used
6	CAN High
7	Not used
8	Not used
9	Ignition supply
10	Park / Neutral Signal
11	Not used
12	Not used
13	Ground
14	Power supply +v
15	Not used
16	Ground

Clutch Application Chart

Transmission State	Clutch / Clutchs Applied During Selected Gear					
	A	B	C	D	E	CC
D1	*	-	-	*	-	*
D2	*	-	*	-	-	*
D3	*	*	-	-	-	*
D4	*	-	-	-	*	*
D5	-	*	-	-	*	*
D6	-	-	*	-	*	*
P	-	-	-	*	-	-
R	-	*	-	*	-	-
N	-	-	-	*	-	-

Solenoids

• CAUTIONS:

When working with the transmission control module (TCM) and main control valve body, all suitable safety precautions must be taken to protect the component against electrostatic discharge.

Do not carry out any electrical tests on the TCM and main control valve body. Failure to follow these instructions may result in component damage.

The hydraulic module contains one solenoid valve. The solenoid valve is actuated by the TCM and has two positions (open or closed), it is used to switch the position valve.

There are six electronic pressure control valves, these convert an electric current into a proportional hydraulic pressure. They are energised

by the TCM and actuate the valves belonging to the relevant switching elements.

Two types of electronic pressure regulator are installed:

1. **1.** Pressure regulator with a rising characteristic (1,3,6 green cap) i.e. as current increases pressure increases (0mA = 0 bar / 700mA = 4.6 bar)
2. **2.** Pressure regulator with a falling characteristic (2,4,5 black cap) i.e. as current increases the pressure drops (0 mA = 4.6 bar / 700 mA = 0 bar)

Both types of regulator have a resistance value of approximately 5 Ohms at 20°C.

Solenoid Application Chart

Selected Gear	Solenoid / Pressure Regulators Applied During Selected Gear						
	SV1	PR1	PR2	PR3	PR4	PR5	PR6
D1	-	*	-	-	*	*	*
D2	-	*	-	*	-	*	*
D3	-	*	*	-	-	*	*
D4	*	*	-	-	*	*	*
D5	*	-	*	-	*	*	*
D6	*	-	-	*	*	*	*

- SV1: Solenoid valve
- PR1: Clutch A
- PR2: Clutch B
- PR3: Clutch C
- PR4: Clutch D& E
- PR5: System Pressure
- PR6: Torque Converter Clutch

System inputs and outputs

System inputs

The TCM uses the permanent voltages supply to support and to maintain data in the random access memory (RAM).

The Term.15 input is used to wake up the TCM. Once awake the TCM commences its initialization sequence. This input is not a power supply input to the TCM. For initialisation to commence the ignition must be switched to the "II2" position and Vbat above 7V but below 16V (30ms after term.15 signal on, the initialization of the TCM starts). Initialization time is 500ms max. When initialization is finished, the Drive Program is started and TCM has full functionality.

The TCM has one internal solenoid ground for all internal solenoids (SV and PR).

This internal input acts as the ground for position switch. The TCM requires two vehicle ground supplies. (Term.31). Both ground wires are linked to one grounding point on the vehicle. The TCM incorporates polarity reversal protection.

System outputs

The P/N signal (from the internal position sensor) is used to ensure that the engine is only started with the transmission gear selector in either the Park or Neutral position. When the selector is in either Park or Neutral this output is activated. This in turn closes a relay that allows the starter to be engaged if allowed by the Engine management system. If this output fails the electronic engine controls system uses a CAN bus signal supplied by the TCM to allow the engine to start.

Transmission control

The selector lever can be used to engage Park through to drive (D) mechanically. The link between the lever and the transmission is by a cable.

The manual side of the shifter, 5 through to position 2 are selected electronically by the CAN bus. Integrated with this are functions for gear selected illumination, brake shift interlock and keylock interlock system. For additional information,
REFER to Section 307-05 Automatic Transmission/Transaxle External Controls.

Automatic Transmission / Transaxle - Transmission Fluid Drain and Refill

General Procedures

Special Tool(s)	
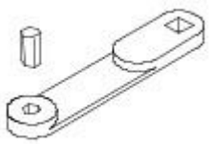 307-452	Adaptor 307-452

Drain

1. Raise and support the vehicle.
   For additional information, refer to: Jacking (100-02 Jacking and Lifting, Description and Operation).
2. Place a suitable container under the transmission.
3. Using the special tool, remove the transmission fluid fill plug.
   - Remove and discard the sealing washer.

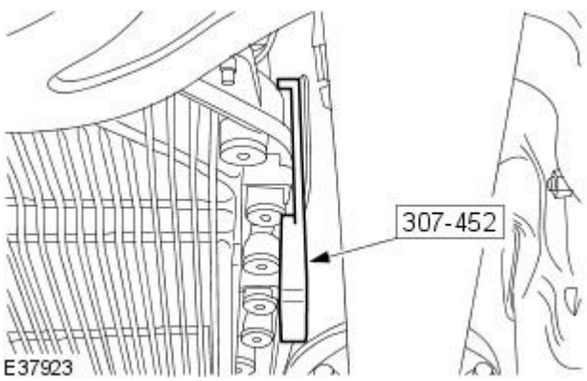

4. CAUTION: If the automatic transmission fluid is very dirty or it contains metallic particles, then along with a new transmission, install a new automatic transmission fluid cooler and lines.

   Remove the transmission fluid drain plug.
   - Remove and discard the sealing washer.

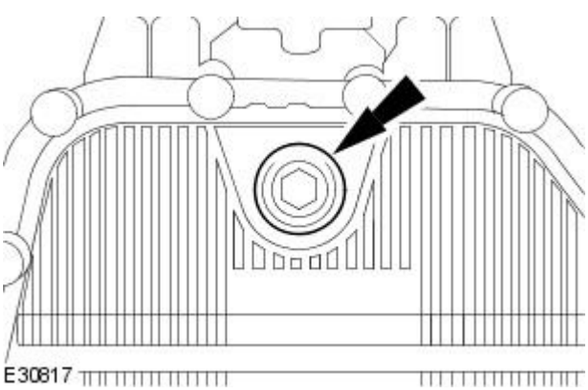

5. NOTE: Install the new sealing washer.

   Install the transmission fluid drain plug.
   - Tighten to 8 Nm.

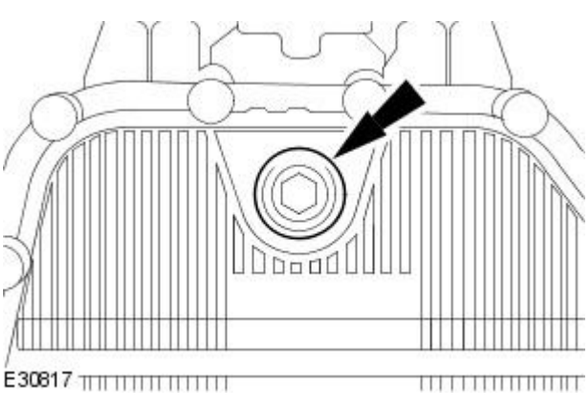

Refill

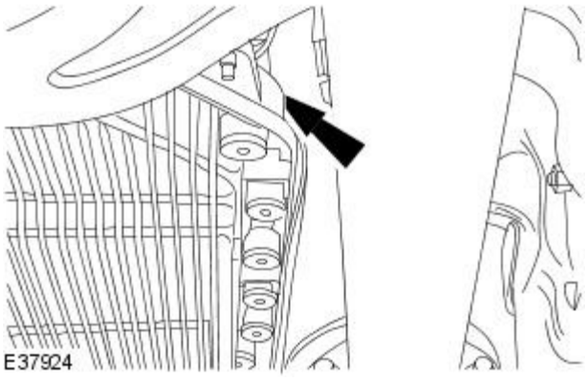

1. NOTE: Use transmission fluid meeting Jaguar specification.

   Fill the transmission with 8 liters of transmission fluid through the transmission fluid fill plug hole.

2. Carry out a transmission fluid level check.
   For additional information, refer to: Transmission Fluid Level Check (307-01 Automatic Transmission/Transaxle, General Procedures).

www.JagDocs.com

Automatic Transmission / Transaxle - Transmission Fluid Level Check

General Procedures

Special Tool(s)	
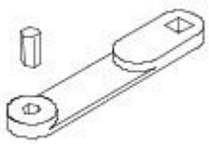 307-452	Adaptor 307-452

1. The follow steps must be observed before starting the transmission fluid level check.

1. The vehicle must be on a horizontal ramp.
2. The parking brake must be applied.
3. The engine must be running for 2 minutes with the transmission selector lever in the "P" position.

2. Connect the Jaguar Approved Diagnostic System.

3. Make sure the transmission selector lever is in the "P" position.

4. NOTE: Make sure the transmission fluid temperature is below 30 °C (86 °F) on the Jaguar Approved Diagnostic System.

With the engine running and the foot brake applied, circulate the transmission fluid by:

1. Moving the transmission selector lever to the "R" position
2. Waiting for three seconds.
3. Moving the transmission selector lever to the "D" position
4. Waiting for three seconds.
5. Moving the transmission selector lever to the "P" position

5. Raise and support the vehicle.
For additional information, refer to Section 100-02 Jacking and Lifting.

6. Place a suitable container under the transmission fluid fill plug.

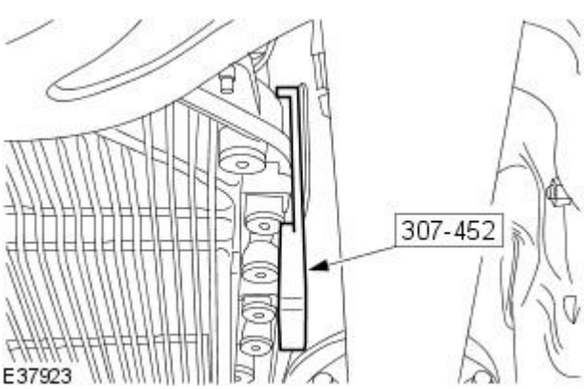

7. WARNING: Make sure that care is exercised near rotating parts. Failure to follow this instruction may result in personal injury.

With the engine running, using the special tool remove the transmission fluid fill plug.

- Remove and discard the sealing washer.

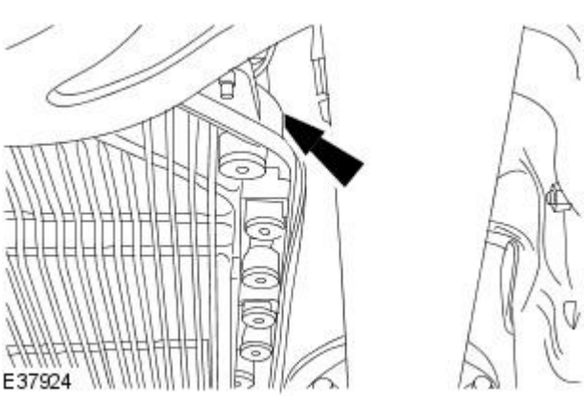

8. NOTE: Use transmission fluid meeting Jaguar specification.

If the transmission fluid does not come out of the transmission fluid fill plug hole the transmission fluid level is insufficient. If this is the case add the transmission fluid in 0.5 liter units into the transmission fluid fill plug hole until fluid comes out.

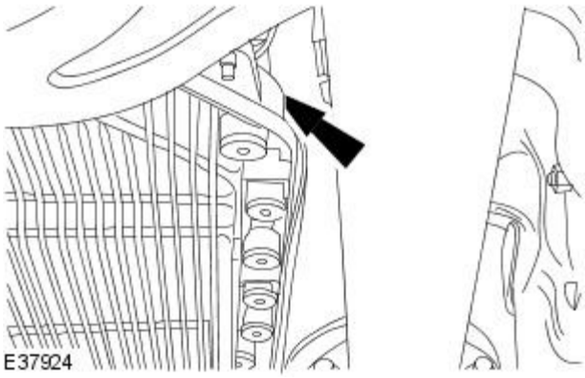

9. NOTE: Make sure the transmission fluid temperature does not exceed 50 °C (122 °F). If the transmission fluid temperature does exceed 50 °C (122 °F) stop the transmission fluid level check and allow the transmission fluid to cool until the temperature is below 30 °C (86°F).

Allow the transmission fluid to drain from the transmission fluid fill plug hole until the flow almost stops.

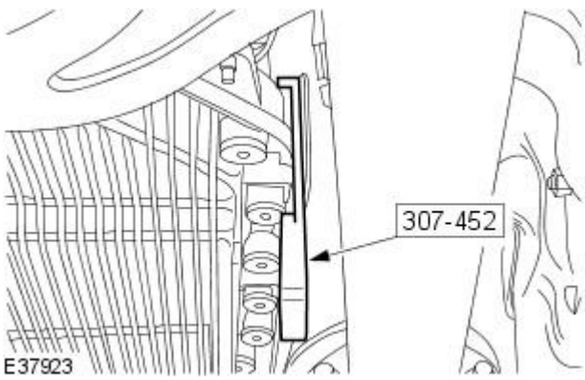

10. NOTE: Install a new sealing washer.

Using the special tool, install the transmission fluid fill plug.

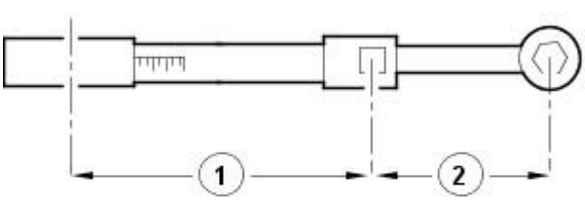

11. CAUTION: Make sure the transmission fluid fill plug is tightened to the correct specification. Failure to follow this instruction may result in damage to the vehicle.

Using the special tool and a torque wrench, tighten the transmission fluid fill plug.

- Tighten the transmission fluid fill plug to the torque given by the calculation
- To make sure the transmission fill plug is torqued to the correct specification. Using the special tool and a torque wrench the following calculation steps must be followed.
    1. Step 1. Multiply 35 Nm by the effective length of the torque wrench (1).
    2. Step 2. Add the effective length of the special tool (2) to the effective length of the torque wrench (1).
    3. Step 3. Divide the total of step 1 by the total of step 2.
    4. Step 4. Set the torque wrench to the figure arrived at in step 3.
- Tighten the transmission fluid fill plug to the torque given by the calculation.

12. Remove the container.

13. Lower the vehicle.

14. Disconnect the Jaguar Approved Diagnostic System.

Published: 11-May-2011

Automatic Transmission / Transaxle - Extension Housing Seal

In-vehicle Repair

Special Tool(s)	
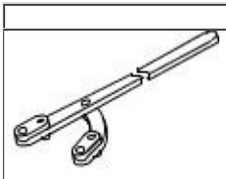 205053	Output Shaft Flange Holding Tool 205-053
303D121	Crankshaft Damper Remover 303-D121
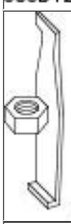 308-375	Seal Remover Input and Output 308-375
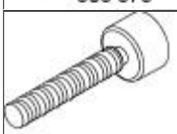 100-012-01	Slide Hammer Adaptor 100-012-01
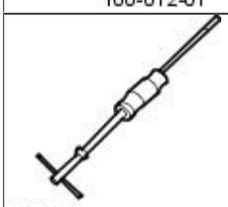 100012	Slide Hammer 100-012
204-264	Pinion Seal Replacer 204-264

Removal

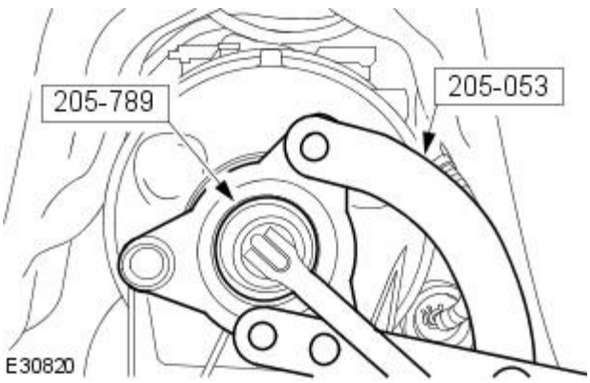

1. Remove the driveshaft.
   For additional information, refer to Section 205-01 Driveshaft.
2. Using the special tool to hold the output shaft flange, remove and discard the output shaft flange retaining nut.

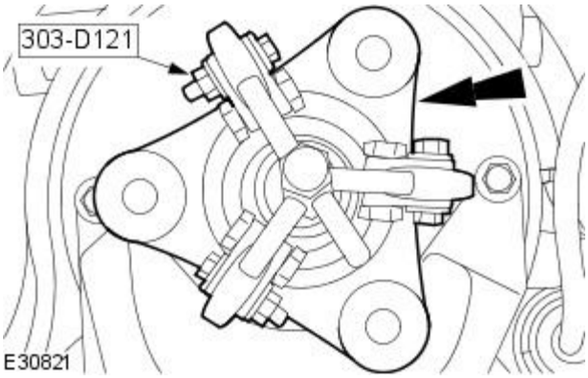

3. Using the special tool, remove the output shaft flange.

- Remove the output shaft flange spacing shim.

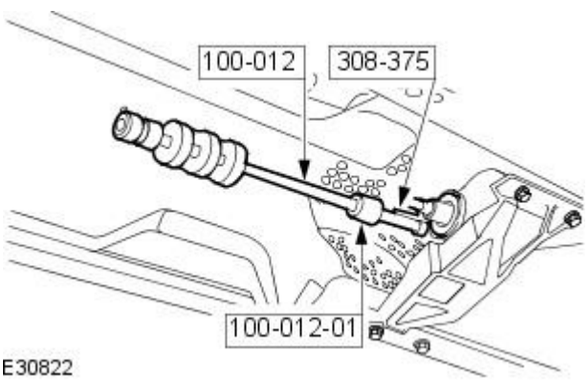

4. CAUTION: Make sure the transmission housing seal face is not damaged when removing the extension housing seal. Failure to follow this instruction may result in damage to the vehicle.

Using the special tools, remove the extension housing seal.

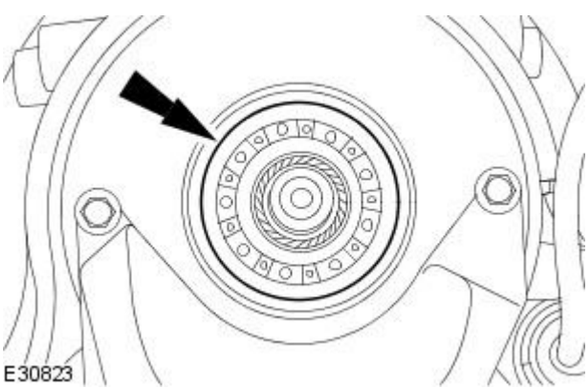

5. NOTE: Using a suitable metal surface cleaner meeting Jaguar specification, clean the seal face on the housing before installing the new seal.

Clean and inspect the transmission housing seal face.

Installation

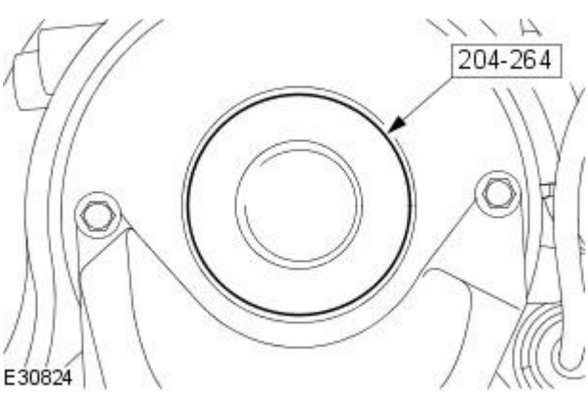

1. Using the special tool, install the extension housing seal.

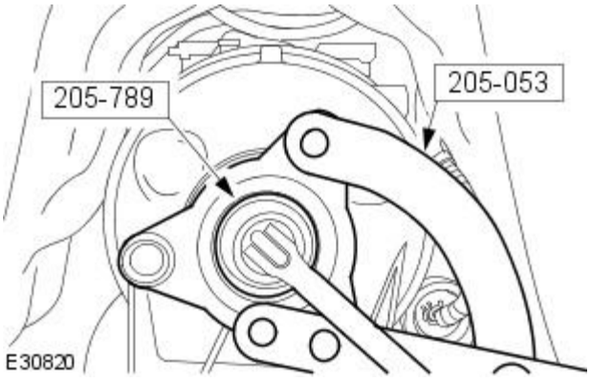

2. Using the special tool to hold the output shaft flange, install a new output shaft flange retaining nut.

- Install the output shaft flange spacing shim.
- Install the output shaft flange.
- Tighten to 60 Nm.

3. Install the driveshaft.
For additional information, refer to Section 205-01 Driveshaft.

Automatic Transmission / Transaxle - Transmission Fluid Pan, Gasket and Filter

In-vehicle Repair

Removal

All vehicles

1. Disconnect the battery ground cable.
   For additional information, refer to: Battery Disconnect (414-01, General Procedures).

Vehicles with diesel engine

2. Remove the air deflector.
   For additional information, refer to: Air Deflector (501-02, Removal and Installation).

All vehicles

3. Drain the transmission.
   For additional information, refer to: Transmission Fluid Drain and Refill (307-01, General Procedures).

Vehicles with diesel engine

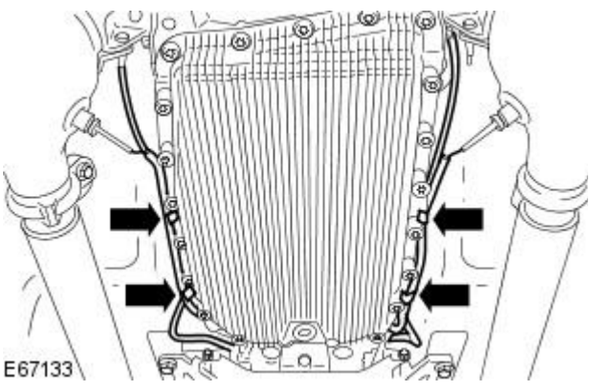

4. Detach the catalytic converter temperature sensor wiring harness from the fluid pan.

All vehicles

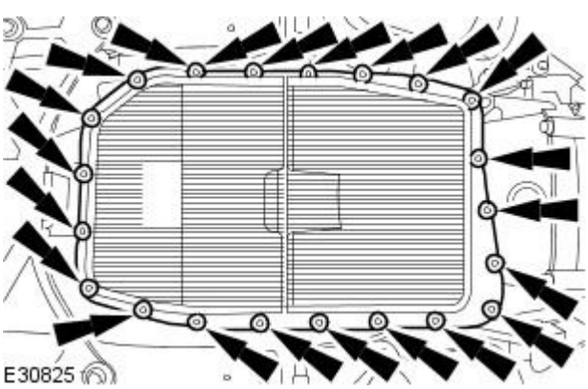

5. NOTE: Discard the fluid pan, gasket and filter.

   Remove the fluid pan, gasket and filter.

   - Remove the retaining bolts.

Installation

All vehicles

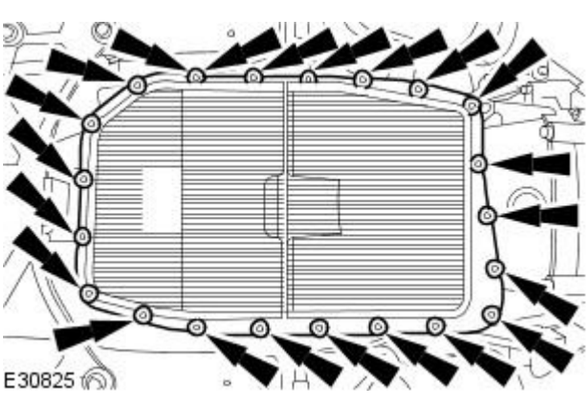

1. Install the new fluid pan, gasket and filter.

   - Tighten to 8 Nm.

Vehicles with diesel engine

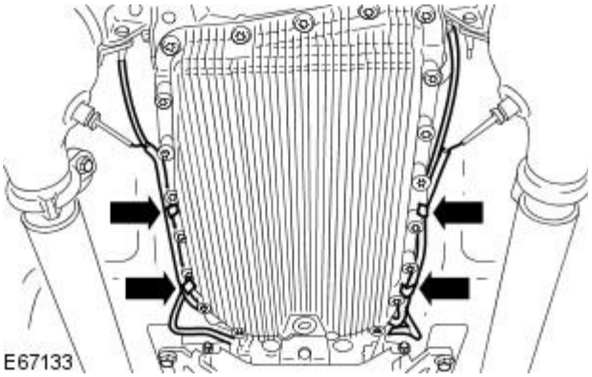

2. Attach the catalytic converter temperature sensor wiring harness onto the fluid pan.

All vehicles

3. Fill the transmission.
   For additional information, refer to: Transmission Fluid Drain and Refill (307-01, General Procedures).

Vehicles with diesel engine

4. Install the air deflector.
   For additional information, refer to: Air Deflector (501-02, Removal and Installation).

All vehicles

5. Lower the vehicle.
6. Connect the battery ground cable.
   For additional information, refer to: Battery Connect (414-01, General Procedures).

Published: 11-May-2011

Automatic Transmission / Transaxle - Transmission Control Module (TCM) and Main Control Valve Body

In-vehicle Repair

General Equipment

Anti-Static Wrist Strap

Removal

1. Remove the fluid pan, gasket and filter.
For additional information, refer to: Transmission Fluid Pan, Gasket and Filter (307-01 Automatic Transmission/Transaxle, In-vehicle Repair).

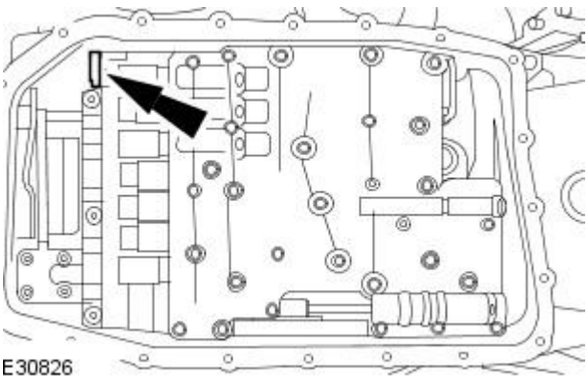

E30826

2. CAUTION: Make sure the transmission control module (TCM) and main control valve body are protected against electrostatic discharge. Failure to follow this instruction may result in component damage.

Reposition the locking device.

3. Disconnect the TCM and main control valve body electrical connector.

1. Reposition the electrical connector retaining ring.
2. Disconnect the electrical connector.

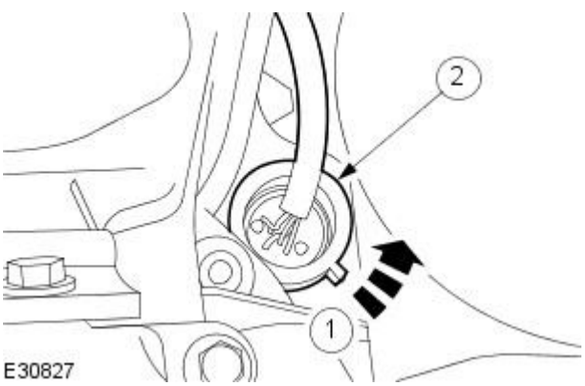

E30827

4. CAUTION: Make sure all suitable safety precautions are taken to protect the TCM and main control valve body electrical connector pins against electrostatic discharge.

Remove the sealing tube.

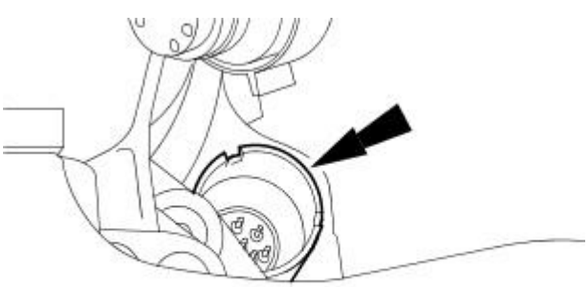

E30828

5. Remove and discard the seals.

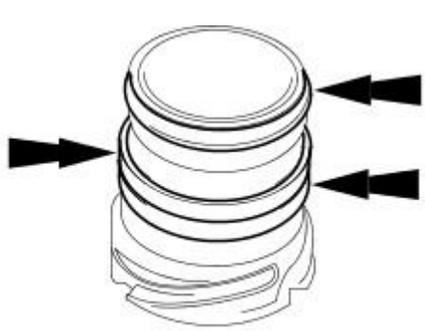

E30831

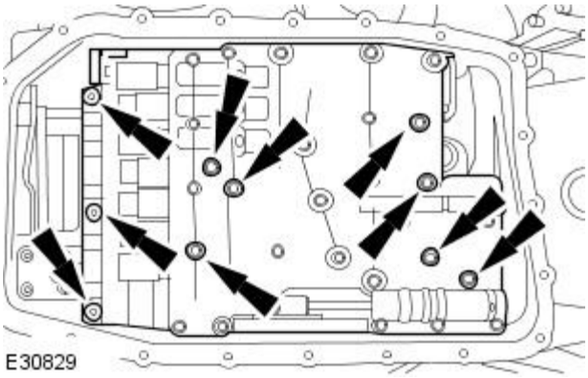

6. Remove the TCM and main control valve body.

- Remove the retaining bolts.

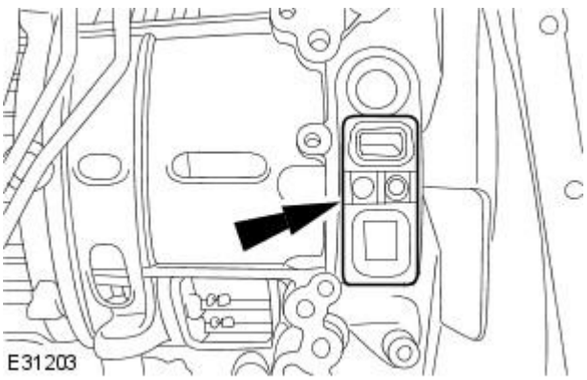

7. Remove the TCM and main control valve body sealing block.

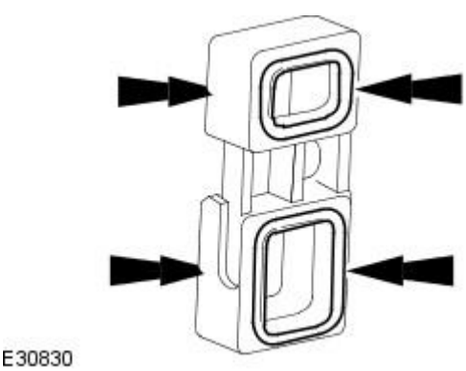

8. Remove and discard the seals.

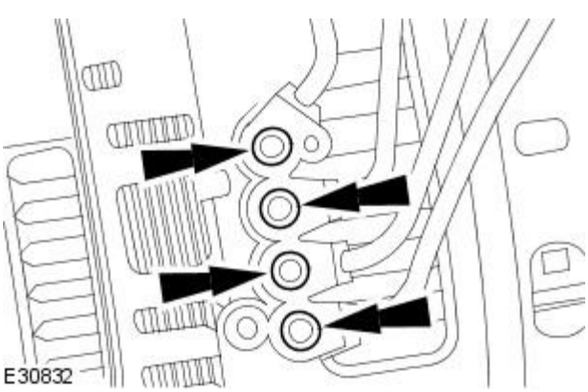

9. Remove and discard the seals.

Installation

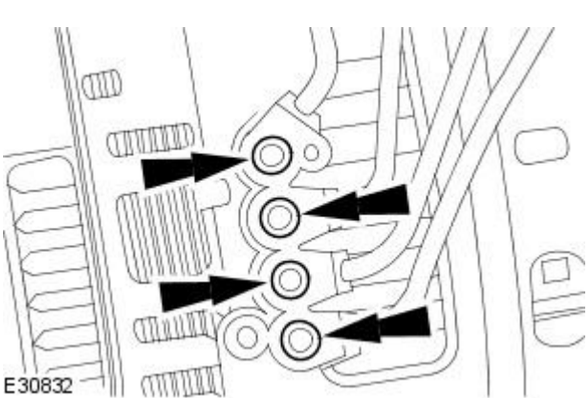

1. Install the new seals.

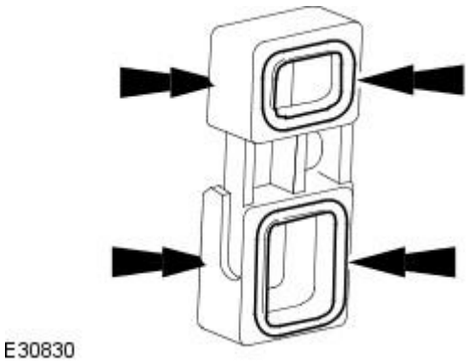

2. Install the new seals.

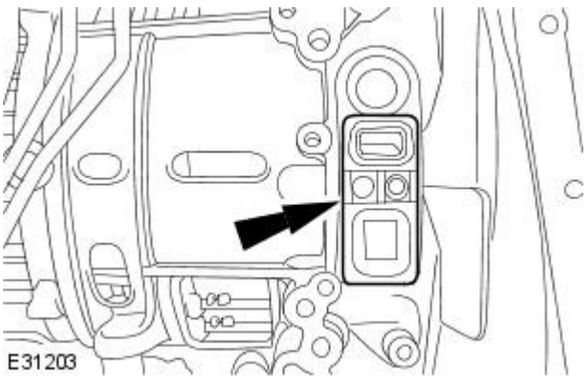

3. Install the TCM and main control valve body sealing block.

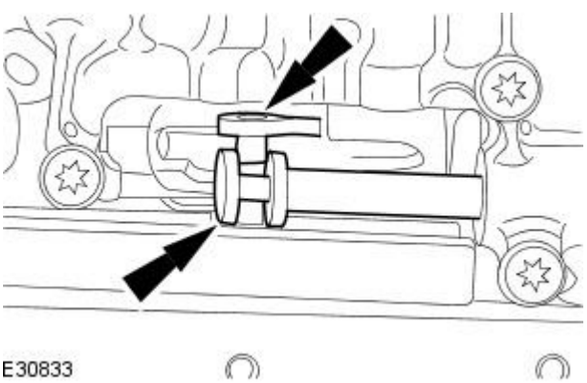

4. CAUTION: Make sure the TCM and main control valve body are protected against electrostatic discharge. Failure to follow this instruction may result in component damage.

Align the transmission selector shaft to the TCM and main control valve body.

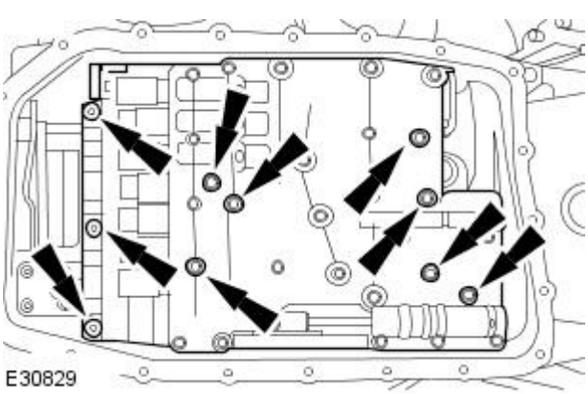

5. Install the TCM and main control valve body retaining bolts.

- Tighten to 8 Nm.

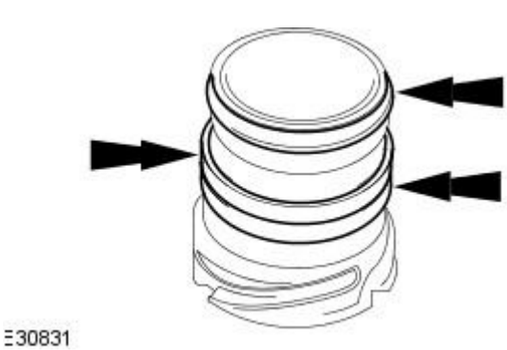

6. Install the new seals.

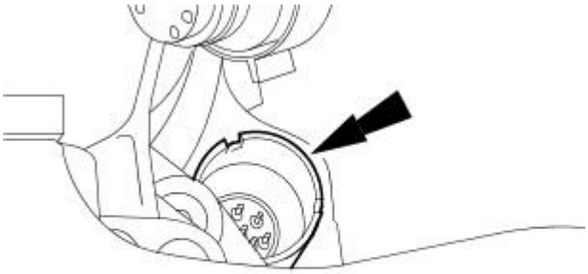

E30828

7. CAUTION: Make sure all suitable safety precautions are taken to protect the TCM and main control valve body electrical connector pins against electrostatic discharge.

Install the sealing tube.

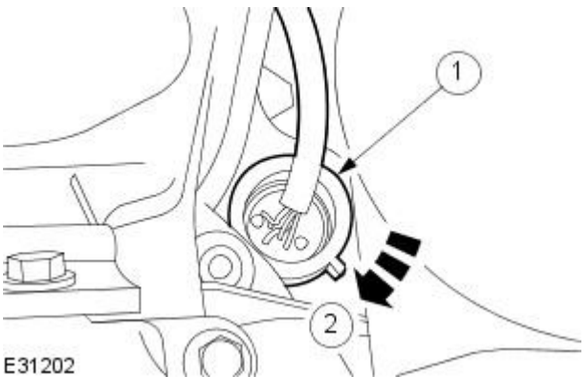

E31202

8. Reposition the TCM and main control valve body electrical connector retaining ring.

1. Connect the electrical connector.
2. Reposition the electrical connector retaining ring.

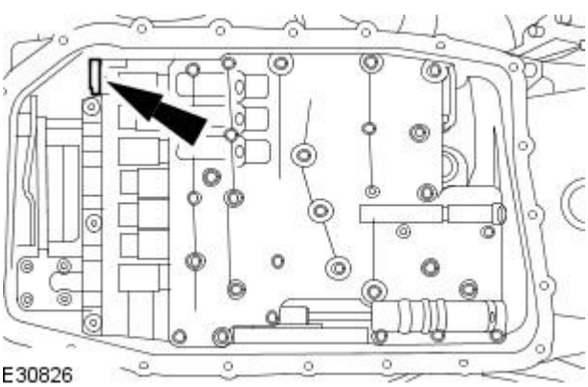

E30826

9. Reposition the locking device.

10. Install the fluid pan, gasket and filter.
For additional information, refer to: Transmission Fluid Pan, Gasket and Filter (307-01 Automatic Transmission/Transaxle, In-vehicle Repair).

Automatic Transmission / Transaxle - Transmission

Removal

Special Tool(s)	
HTJ12002	Powertrain Assembly Jack HTJ1200-02
E36403	Engine Lifting Brackets 303-356
303-021	Engine Support Bracket 303-021

All vehicles

1. Move the transmission selector lever to the "N" position.
2. Disconnect the battery ground cable.
   For additional information, refer to Section 414-01 Battery, Mounting and Cables.
3. Remove the catalytic converters.
   For additional information, refer to Section 309-00 Exhaust System.

Vehicles with supercharger

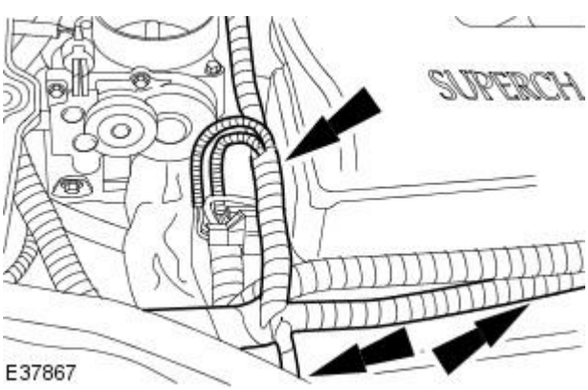

4. Detach the wiring harness.

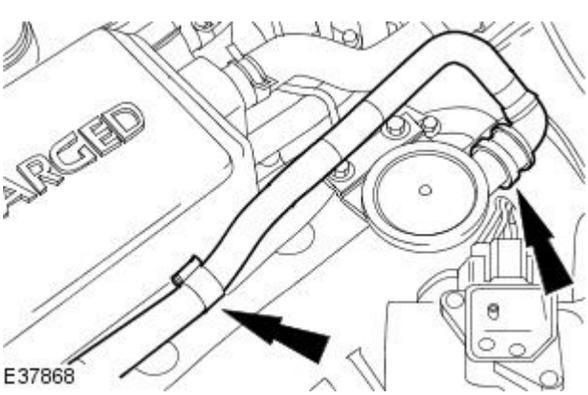

5. Detach the crankcase ventilation tube.

All vehicles

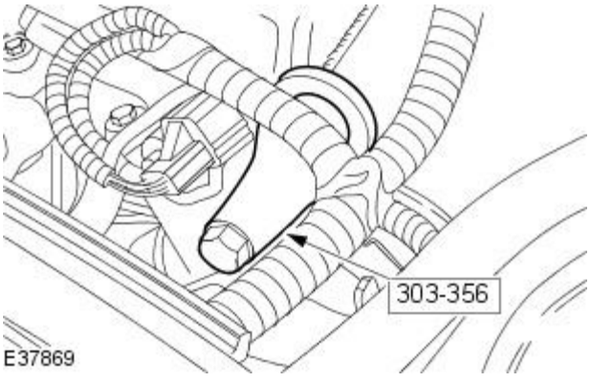

6. NOTE: Vehicles with 4.2L engine with supercharger shown, vehicles with 4.2L engine similar.

Install the special tool.

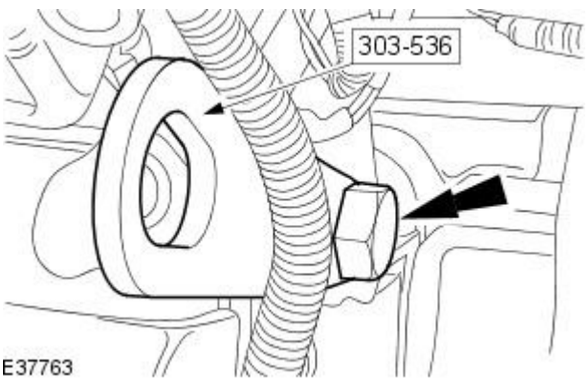

7. NOTE: Vehicles with 4.2L engine with supercharger shown, vehicles with 4.2L engine similar.

Install the special tool.

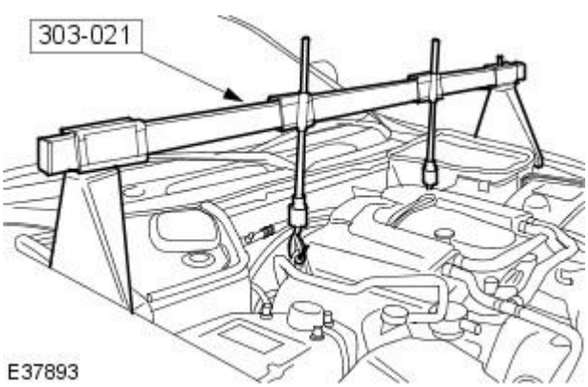

8. NOTE: Vehicles with 4.2L engine with supercharger shown, vehicles with 4.2L engine without supercharger similar.

Install the special tool.

- Rotate the special tool adjustment bolts a suitable amount of turns to improve access to the top of the automatic transmission.

9. Remove the driveshaft.
For additional information, refer to Section 205-01 Driveshaft.

10. Remove the torque converter retaining bolt access cover.

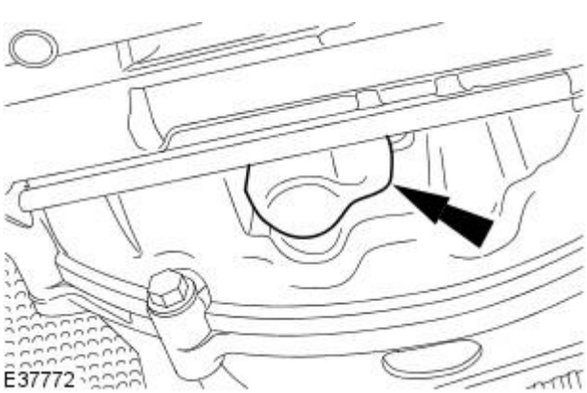

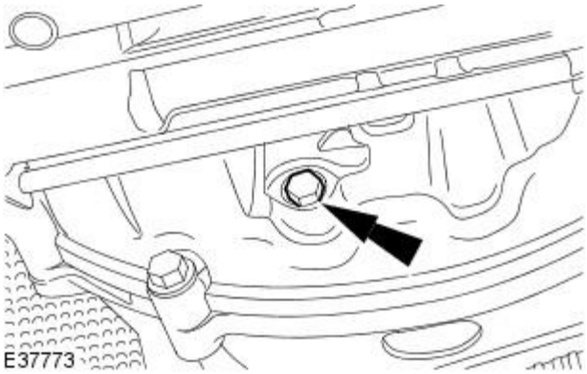

11. Remove the torque converter retaining bolts.

- Rotate the torque converter to gain access to the remaining two retaining bolts.

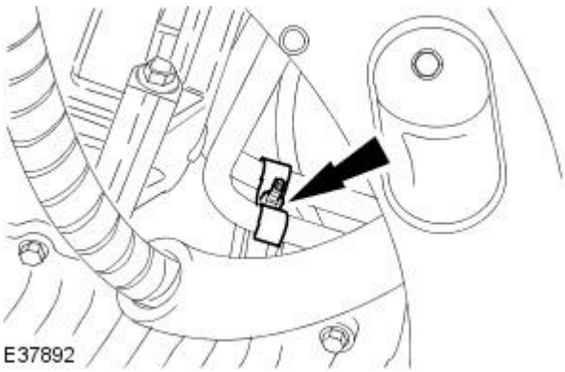

12. Detach the transmission fluid cooler tubes.

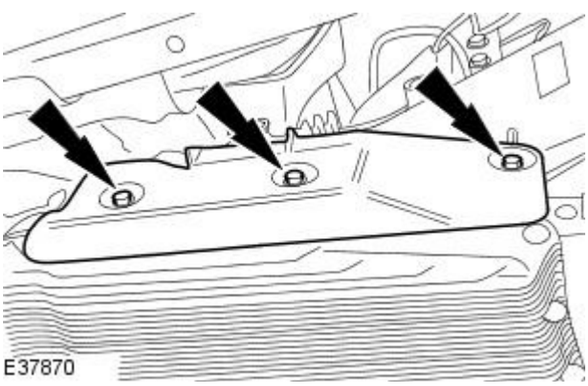

13. NOTE: Right-hand shown, left-hand similar.

Remove the transmission heat shields.

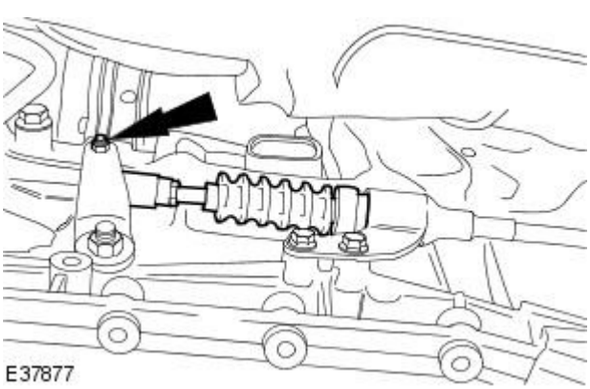

14. Detach the selector lever cable transmission gear selector.

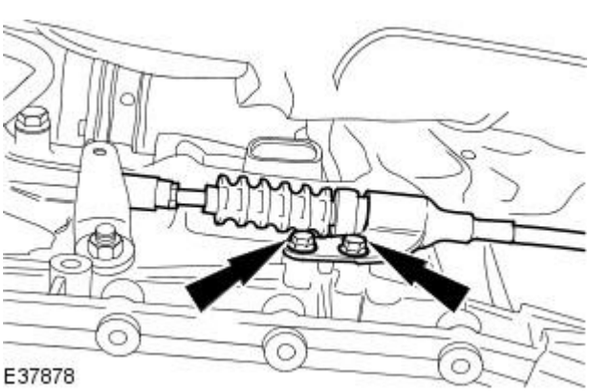

15. Reposition the selector lever cable and bracket.

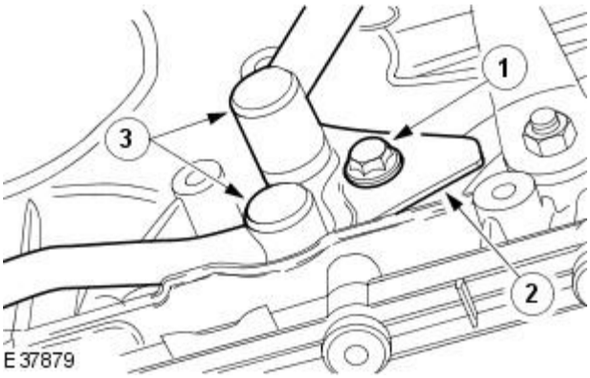

16. Detach the transmission fluid cooler tubes from the automatic transmission.

1. Remove the retaining bolt.
2. Remove the retaining plate.

16. CAUTION: Make sure the transmission fluid cooler tubes are not removed from the automatic transmission by using a pry bar. Failure to follow this instruction may result in damage to the vehicle.

3. Detach the transmission fluid cooler tubes from the automatic transmission.

- Allow the transmission fluid to drain into a suitable container.

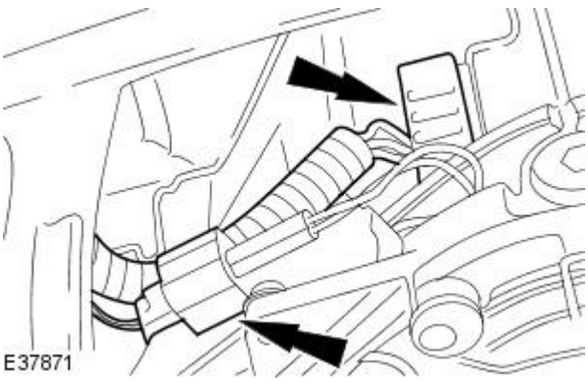

17. CAUTION: Make sure the transmission control module (TCM) and main control valve body is protected against electrostatic discharge. Failure to follow this instruction may result in component damage.

Disconnect the automatic transmission electrical connectors.

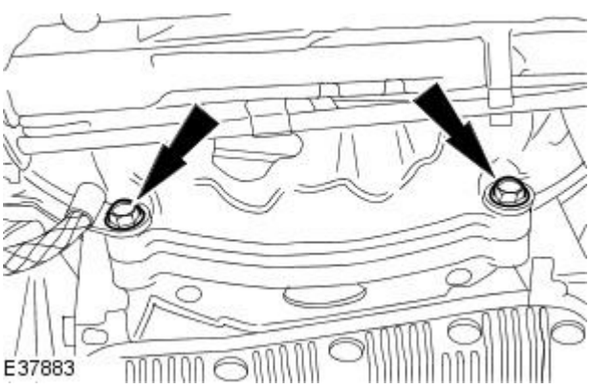

18. Remove the transmission to engine lower retaining bolts.

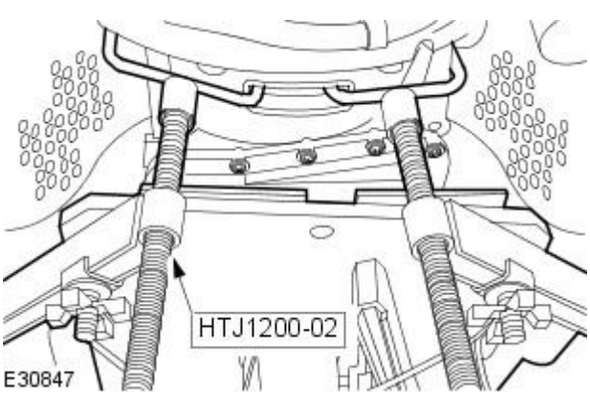

19. CAUTION: Make sure the automatic transmission weight is evenly supported on the special tool. Failure to follow this instruction may result in damage to the vehicle.

Install the special tool.

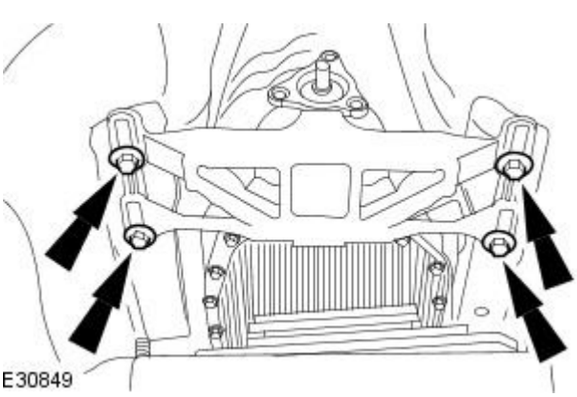

20. Lower the rear of the transmission.

- Remove the automatic transmission mount retaining bolts.

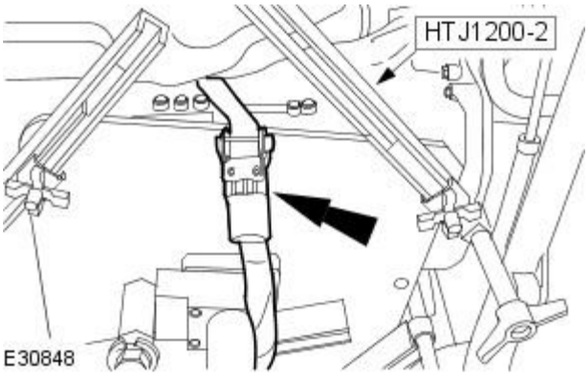

21. WARNING: Secure the automatic transmission to the special tool using the tie down straps. Failure to follow this instruction may result in personal injury.

Install the tie down strap.

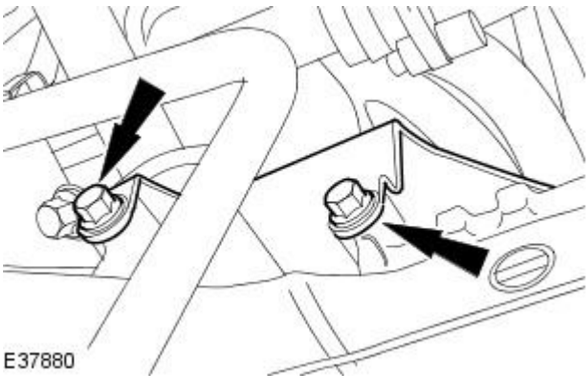

22. Remove the transmission mount bracket retaining bolts.

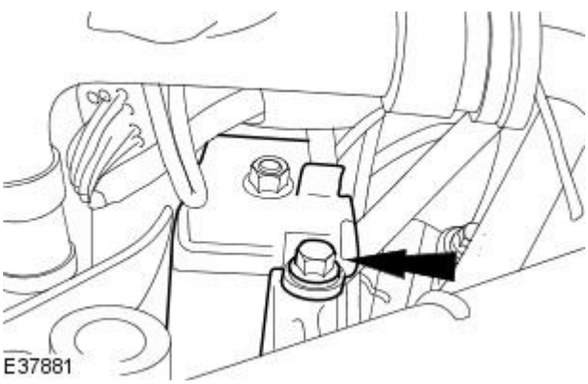

23. Detach the transmission mount bracket.

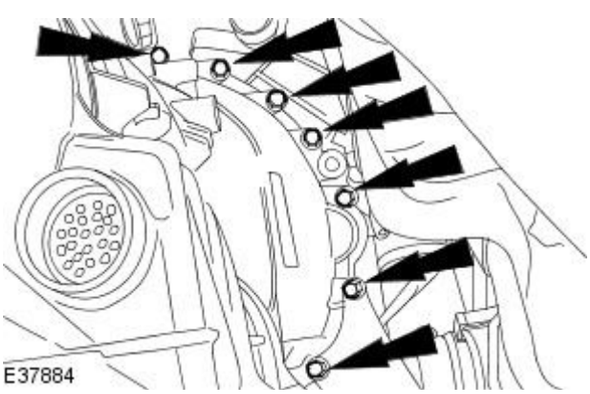

24. Remove the transmission to engine retaining bolts.

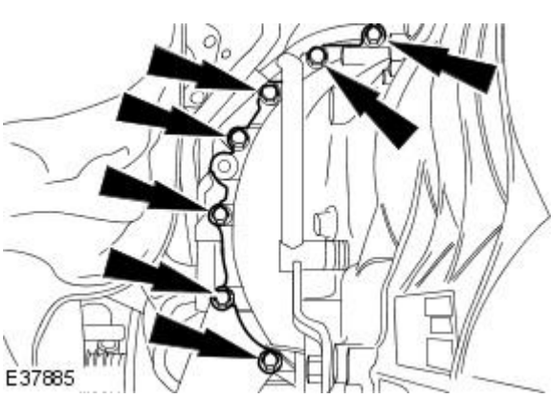

25. WARNING: Do not let the torque converter drop out of the automatic transmission. Failure to follow this instruction may result in personal injury.

Remove the automatic transmission from the vehicle.

- Remove the transmission to engine retaining bolts.
- Lower the automatic transmission from the vehicle.

Automatic Transmission / Transaxle - Input Shaft Seal

Disassembly and Assembly of Subassemblies

Special Tool(s)	
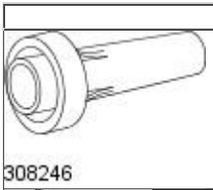 308246	Front Seal Installer 308-246
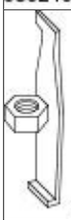 308-375	Seal Remover Input and Output 308-375
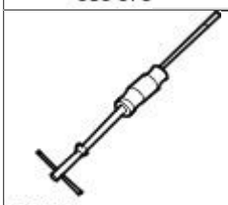 100012	Slide Hammer 100-012
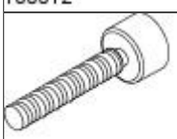 100-012-01	Slide Hammer Adaptor 100-012-01
307-139	Torque Converter Handles 307-139

1. Remove the transmission assembly.
For additional information, refer to: Transmission - 3.0L (307-01, Removal) /
Transmission - 3.5L/4.2L (307-01, Removal) /
Transmission - 2.7L Diesel (307-01, Removal).

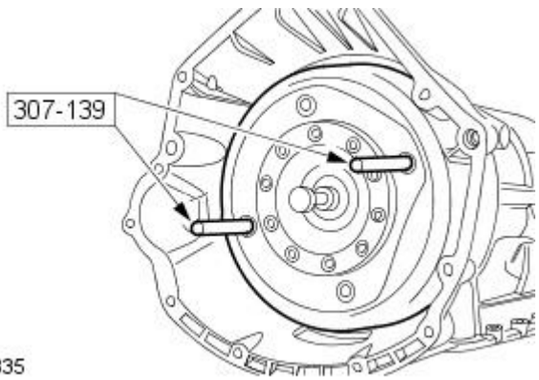

E30835

2. WARNING: Do not let the torque converter drop out of the transmission. Failure to follow this instruction may result in personal injury.

Using the special tools, remove the torque converter.

- Drain any remaining fluid into a suitable container.

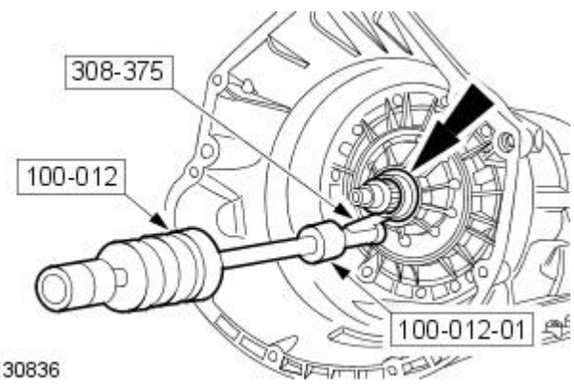

E30836

3. CAUTION: Make sure the transmission housing seal face is not damaged when removing the torque converter seal. Failure to follow this instruction may result in damage to the vehicle.

Using the special tools, remove the input shaft seal.

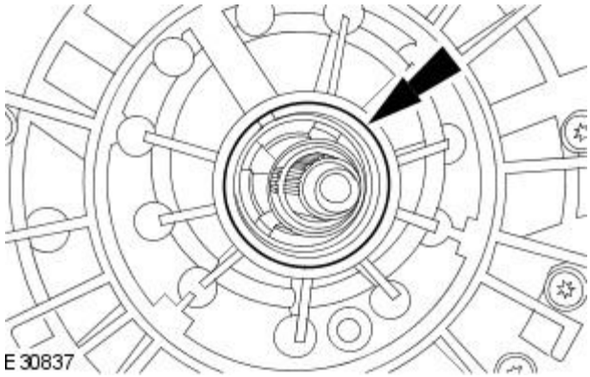

4. NOTE: Using a suitable metal surface cleaner meeting Jaguar specification. clean the seal face on the housing before fitting the new seal.

Clean and inspect the transmission housing seal face.

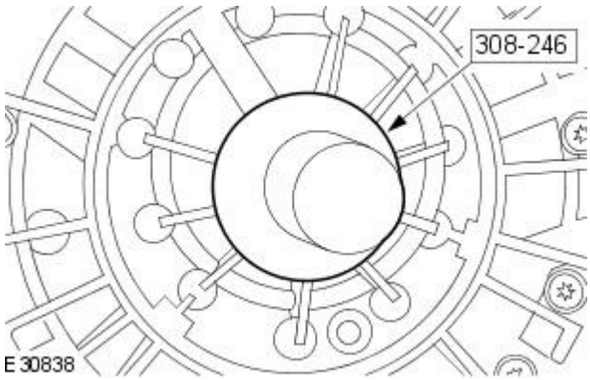

5. Using the special tool, install a new input shaft seal.

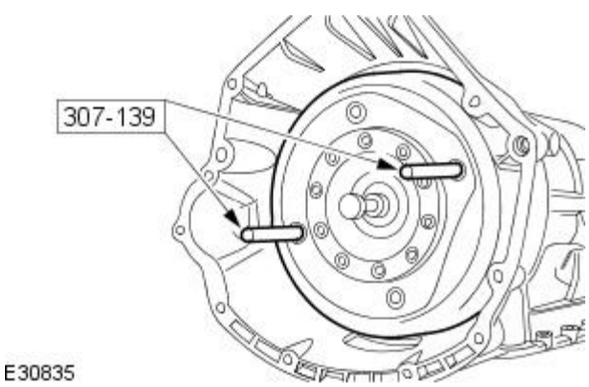

6. WARNING: Do not let the torque converter drop out of the transmission. Failure to follow this instruction may result in personal injury.

• NOTE: The torque converter hub must engage fully in the oil pump drive gear.

Using the special tools, install the torque converter.

7. Install the transmission assembly.
For additional information, refer to: Transmission - 3.0L (307-01, Installation) /
Transmission - 3.5L/4.2L (307-01, Installation) /
Transmission - 2.7L Diesel (307-01, Installation).

Automatic Transmission / Transaxle - Transmission

Installation

Special Tool(s)	
HTJ12002	Powertrain Assembly Jack HTJ1200-02
E36403	Engine Lifting Brackets 303-356
303-021	Engine Support Bracket 303-021

All vehicles

1. CAUTION: If the automatic transmission fluid is very dirty or it contains metallic particles, then along with a new transmission, install a new automatic transmission fluid cooler and lines.

Flush the transmission fluid cooler and tubes.

2. NOTE: Use high-temperature grease meeting Jaguar specification.

Apply a thin layer of high-temperature grease to the centering spigot bore on the torque converter.

3. WARNING: Do not let the torque converter drop out of the automatic transmission. Failure to follow this instruction may result in personal injury.

CAUTION: The torque converter hub must engage fully in the oil pump drive gear throughout the whole installation procedure.

Install the automatic transmission to the vehicle.

- Raise the automatic transmission to the vehicle.
- Install the transmission to engine retaining bolts.
- Tighten to 48 Nm.

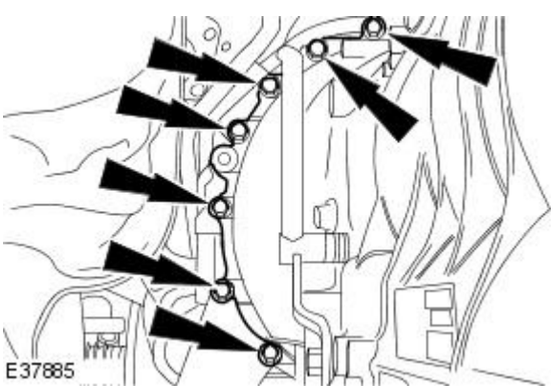

4. Install the transmission to engine retaining bolts.

- Tighten to 48 Nm.

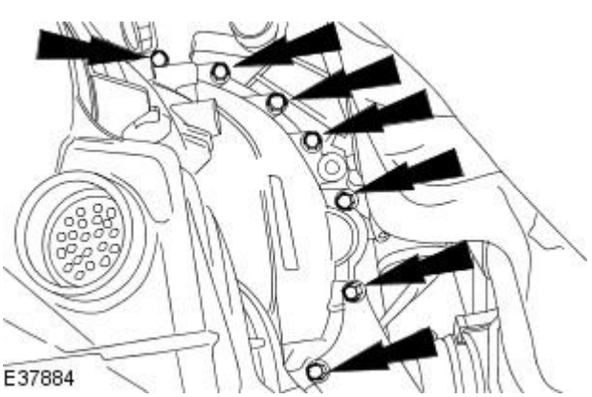

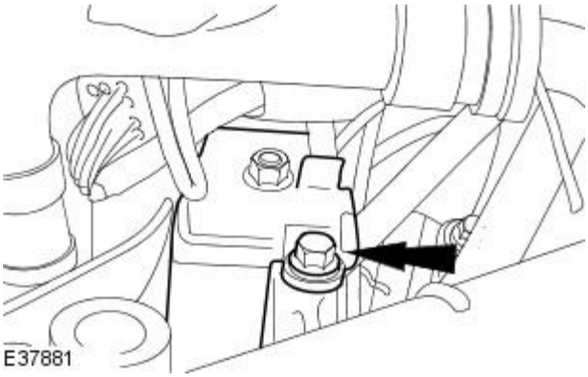

5. Attach the transmission mount bracket.

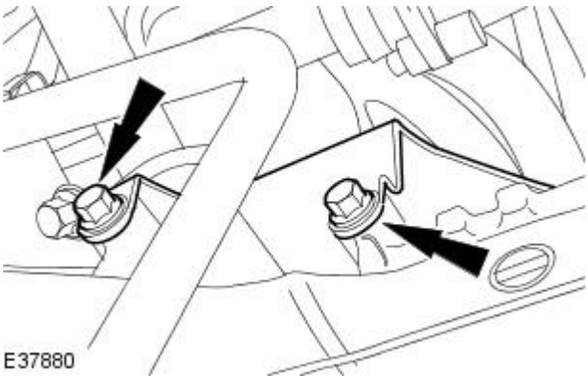

6. Install the transmission mount bracket retaining bolts.

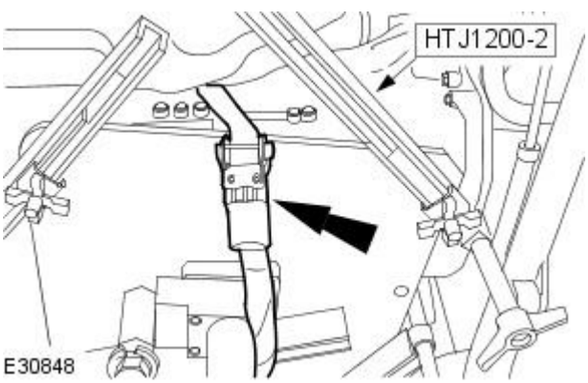

7. Remove the tie down strap.

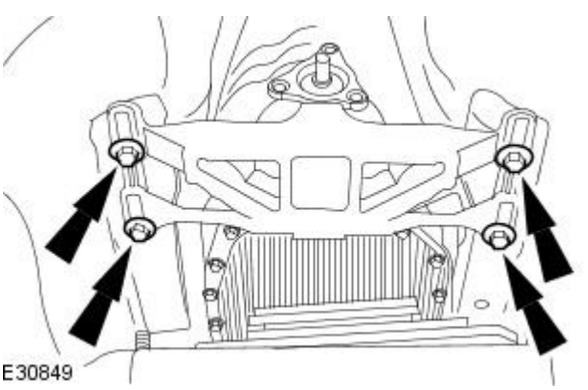

8. Install the automatic transmission mount retaining bolts.

- Raise the rear of the transmission.
- Tighten to 50 Nm.

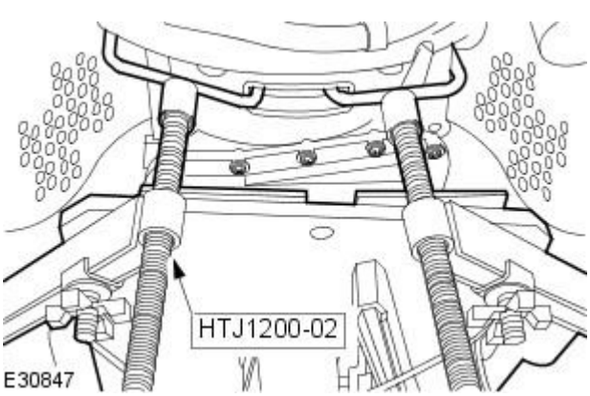

9. Remove the special tool.

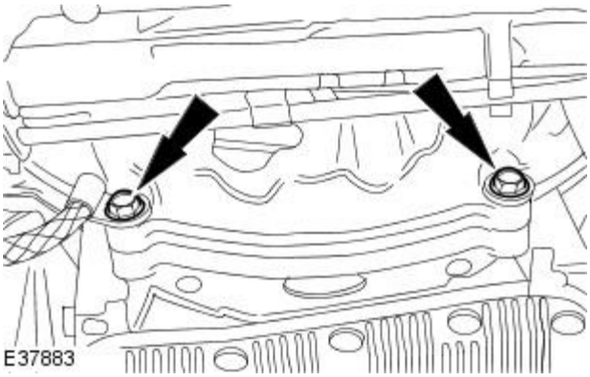

10. Install the transmission to engine lower retaining bolts.

- Tighten to 48 Nm.

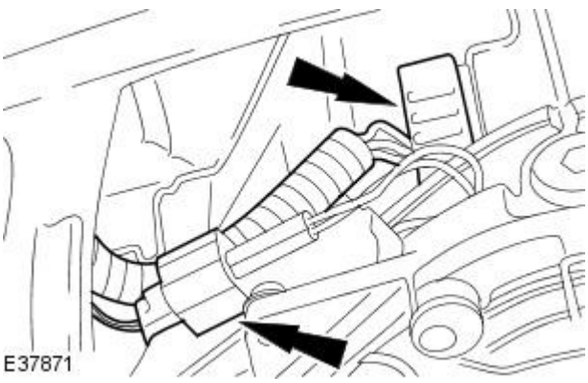

11. CAUTION: Make sure the transmission control module (TCM) and main control valve body is protected against electrostatic discharge. Failure to follow this instruction may result in component damage.

Connect the automatic transmission electrical connectors.

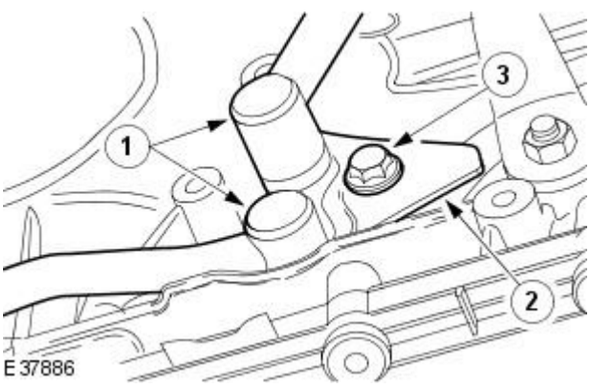

12. Attach the transmission fluid cooler tubes to the automatic transmission.

1. Attach the transmission fluid cooler tubes to the automatic transmission.
2. Install the retaining plate.
3. Install the retaining bolt.

- Tighten to 23 Nm.

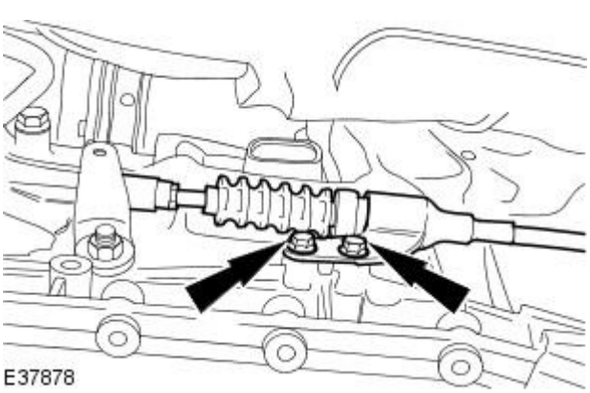

13. Attach the selector lever cable and bracket.

- Tighten to 11 Nm.

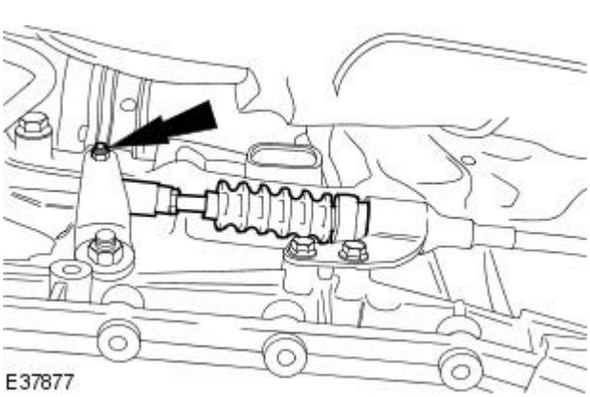

14. Attach the selector lever cable to the transmission gear selector.

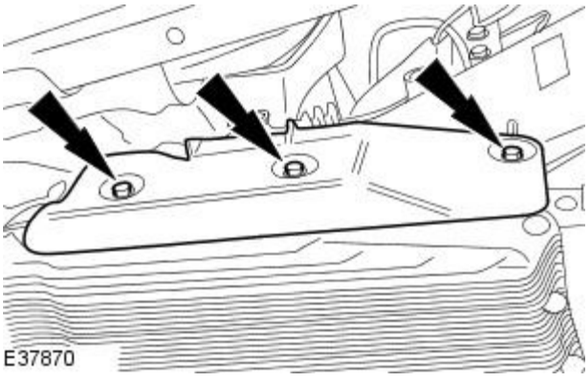

15. NOTE: Right-hand shown, left-hand similar.

Install the transmission heat shields.

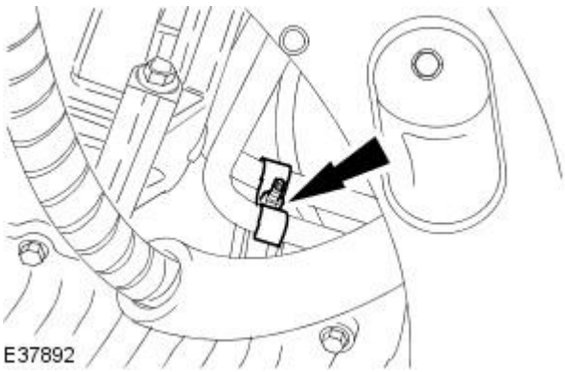

16. Attach the transmission fluid cooler tubes.

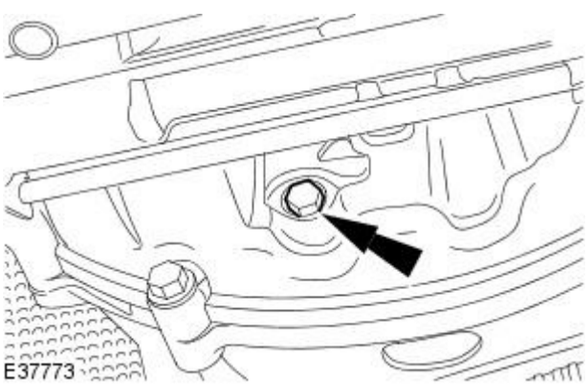

17. Install the torque converter retaining bolts.

- Rotate the torque converter to gain access to the remaining two retaining bolts.
- Tighten to 55 Nm.

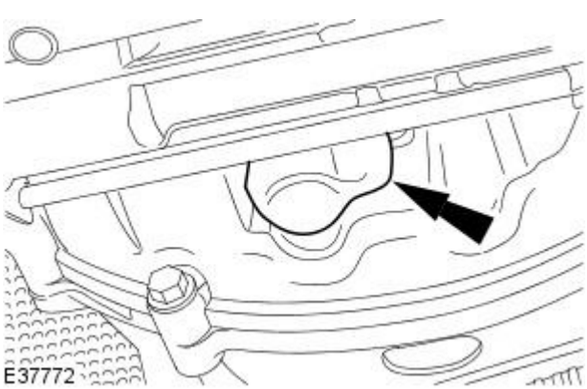

18. Install the torque converter retaining bolt access cover.

19. Install the driveshaft.
For additional information, refer to: Driveshaft (205-01 Driveshaft, Removal and Installation).

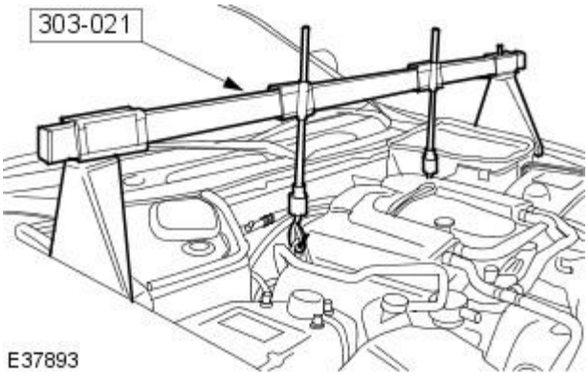

20. NOTE: Vehicles with 4.2L engine with supercharger shown, vehicles with 4.2L engine without supercharger similar.

• NOTE: Right-hand shown, Left-hand similar.

Remove the special tool.

- Loosen the special tool adjustment bolts.

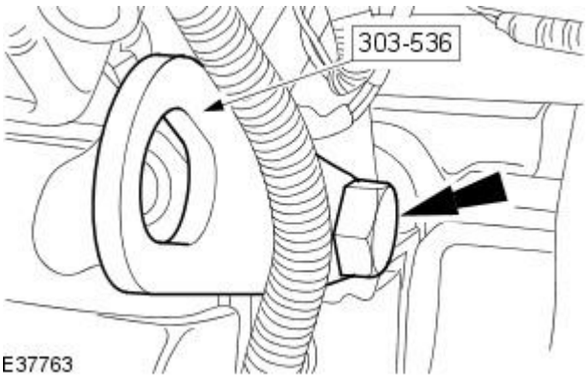

21. NOTE: Vehicles with 4.2L engine with supercharger shown, vehicles with 4.2L engine similar.

Remove the special tool.

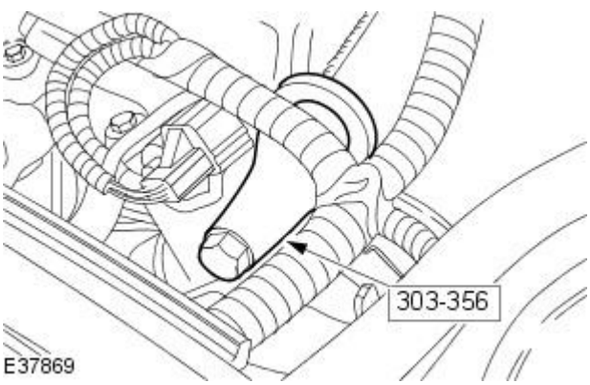

22. NOTE: Vehicles with 4.2L engine with supercharger shown, vehicles with 4.2L engine similar.

Remove the special tool.

Vehicles with supercharger

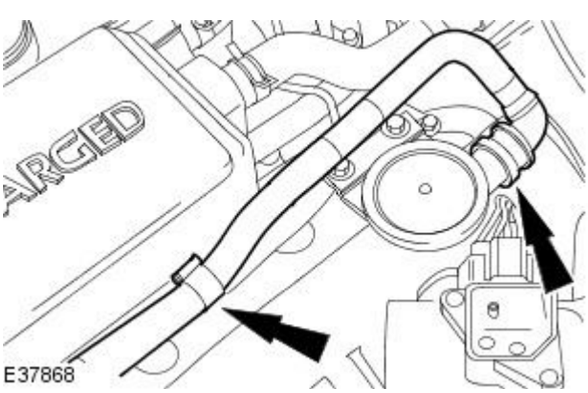

23. Attach the crankcase ventilation tube.

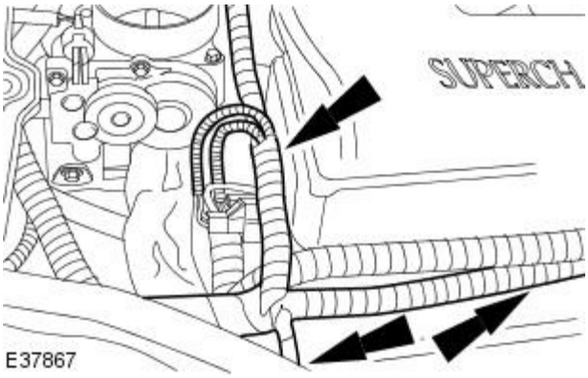

24. Attach the wiring harness.

All vehicles

25. Attach the catalytic converters.
For additional information, refer to: Catalytic Converter LH (309-00 Exhaust System, Removal and Installation) / Catalytic Converter RH (309-00 Exhaust System, Removal and Installation).

26. Connect the battery ground cable.
For additional information, refer to: Battery Ground Cable (414-01 Battery, Mounting and Cables, Removal and Installation).

27. Carry out a transmission fluid level check.
For additional information, refer to: Transmission Fluid Level Check (307-01 Automatic Transmission/Transaxle, General Procedures).

28. NOTE: For NAS vehicles only.

If required, carry out a long drive cycle.
For additional information, refer to: Powertrain Control Module (PCM) Long Drive Cycle Self-Test (303-14 Electronic Engine Controls, General Procedures).

Transmission / Transaxle Cooling -

General Specifications

Item	Specification
Transmission fluid type	ATF Shell M1375.4

Torque Specifications

Description	Nm	lb-ft	lb-in
Transmission fluid cooler tubes to transmission fluid cooler	20	15	-
Transmission fluid cooler tubes to transmission	23	17	-
Transmission fluid cooler tubes to engine oil pan	10	-	89

Published: 11-May-2011

Transmission / Transaxle Cooling - Transmission Cooling

Description and Operation

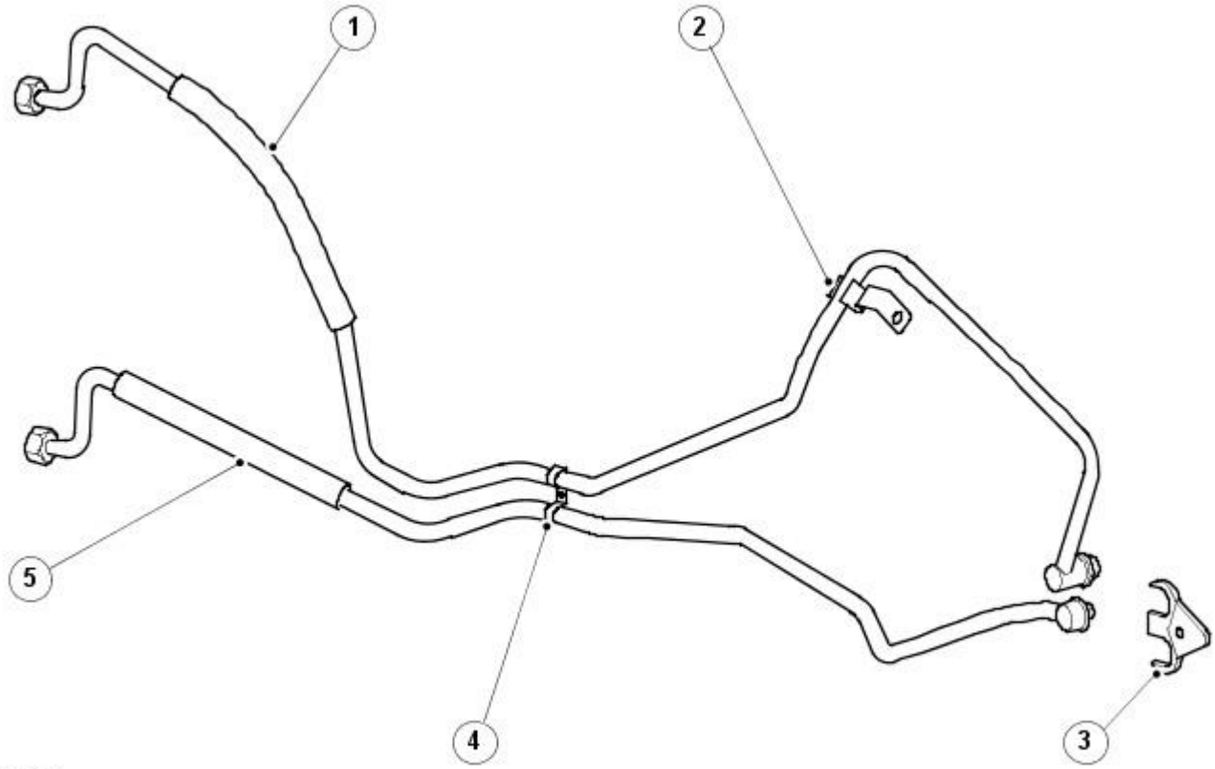

E38526

Item	Part Number	Description
1	—	Transmission fluid cooler supply tube
2	—	Transmission fluid cooler supply tube retaining bracket
3	—	Transmission fluid cooler tubes retaining plate
4	—	Transmission fluid cooler tubes retaining bracket
5	—	Transmission fluid cooler return tube

Oil Cooler

The oil cooler is of an aluminium construction consisting of a tube and louvered fin core-type, the tubes are arranged horizontally for the crossflow of the oil.

It is divided into two sections to provide cooling for both the transmission and the engine, each section is separate within the same unit.

When carrying out any transmission procedures the drained oil should be checked thoroughly for any metal filings or particles, in the event of this the transmission fault should be located followed by a thorough flushing of the oil cooler and oil cooler tubes.

Published: 11-May-2011

Transmission / Transaxle Cooling - Transmission Cooling

Diagnosis and Testing

Inspection and Verification

1. **1.** Verify the customer concern by operating the system.
2. **2.** Visually inspect for obvious signs of mechanical or electrical damage.

Visual Inspection Chart

Mechanical
• Feed and return tubes • Connections to the automatic transmission and the automatic transmission fluid cooler • Automatic transmission fluid level

3. **3.** If an obvious cause for an observed or reported concern is found, correct the cause (if possible) before proceeding to the next step.
4. **4.** If the concern is not visually evident, verify the sympton and refer to the Sympton chart.

Symptom chart

Condition	Possible sources	Action
Over heating of the automatic transmission.	Obstruction in the automatic transmission fluid cooler.	• Flush out the automatic transmission fluid cooler with new automatic transmission fluid. • If the flushing is unsucessful install a new automatic transmission fluid cooler.
Over heating of the automatic transmission.	Obstruction in the automatic transmission fluid tubes.	• Flush out the automatic transmission fluid cooler tubes with new automatic transmission fluid. • If the flushing is unsucessful install new automatic transmission fluid cooler tubes.
Loss of automatic transmission fluid	Connections to the automatic transmission and the automatic transmission fluid cooler.	• Check the torque of the tubes. • Check the tubes, connections and seals.
Loss of automatic transmission fluid	Leak at oil cooler.	• Check the torque of the tubes. • Check the tubes, connections and seals. • INSTALL new oil cooler.

Transmission / Transaxle Cooling - Transmission Fluid Cooler Return Tube

Removal and Installation

Removal

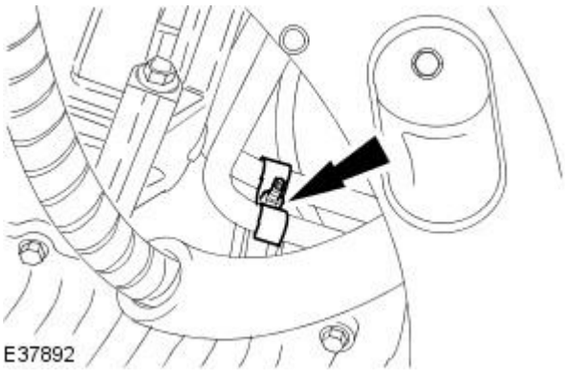

1. Remove the left-hand engine mount.
For additional information, refer to Section 303-01 Engine.

2. Remove the transmission fluid cooler tube retaining bracket.

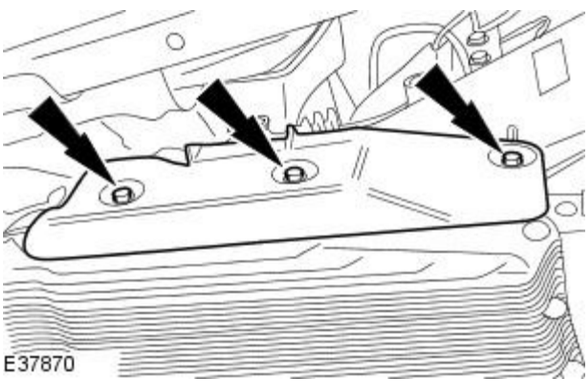

3. NOTE: Right-hand shown, left-hand similar.

Remove the transmission heat shield.

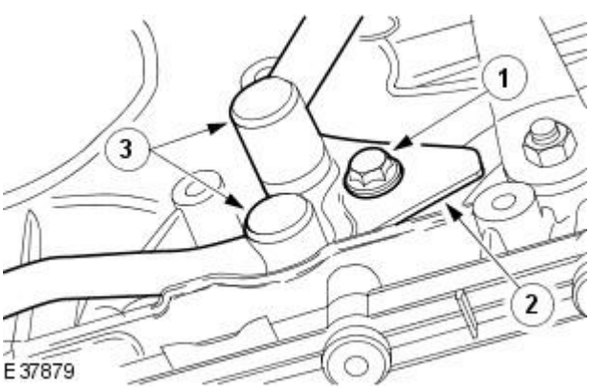

4. Detach the transmission fluid cooler tubes.

1. Remove the retaining bolt.
2. Remove the retaining plate.

4. CAUTION: Make sure the transmission fluid cooler tubes are not removed from the automatic transmission by using a pry bar. Failure to follow this instruction may result in damage to the vehicle.

3. Detach the transmission fluid cooler tubes.

- Allow the transmission fluid to drain into a suitable container.

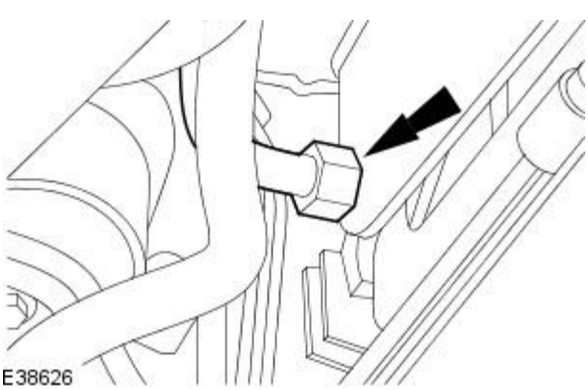

5. NOTE: Cap the exposed ports.

Remove the transmission fluid cooler return tube.

- Remove and discard the O-ring seal.

Installation

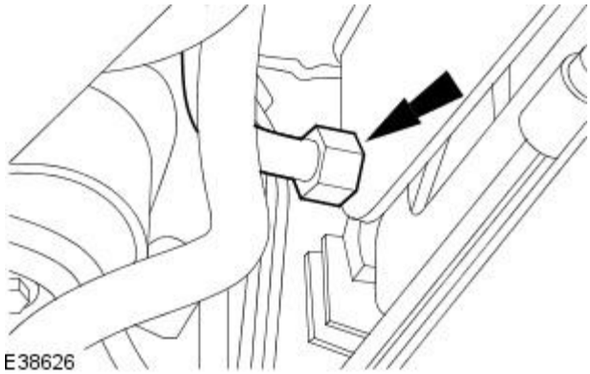

1. NOTE: Uncap the exposed ports.

• NOTE: Install a new O-ring seal.

Install the transmission fluid cooler return tube.

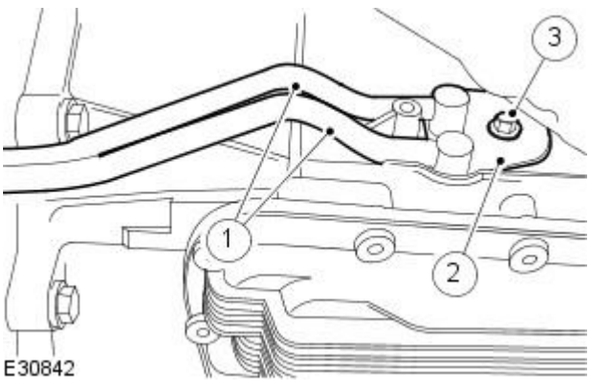

2. NOTE: Install a new O-ring seal.

Install the transmission fluid cooler tubes.

1. Attach the transmission fluid cooler tubes.
2. Install the retaining plate.
3. Install the retaining bolt .

- Tighten to 23 Nm.

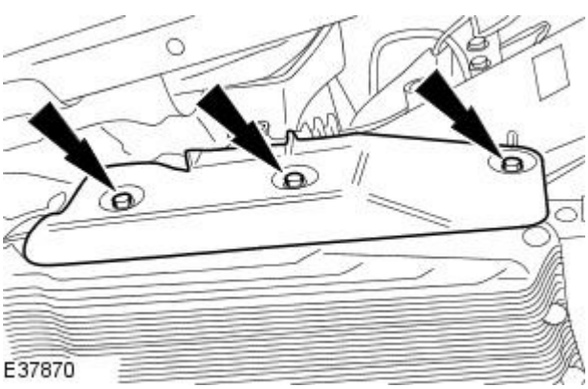

3. NOTE: Right-hand shown, left-hand similar.

Install the transmission heat shield.

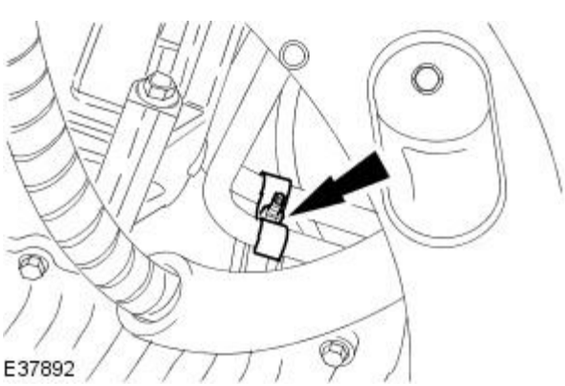

4. Install the transmission fluid cooler tube retaining bracket.

5. Install the left-hand engine mount.
For additional information, refer to Section 303-01 Engine.

6. Carry out transmission fluid level check.
For additional information, refer to Section 307-01 Automatic Transmission/Transaxle.

Transmission / Transaxle Cooling - Transmission Fluid Cooler Supply Tube

Removal and Installation

Removal

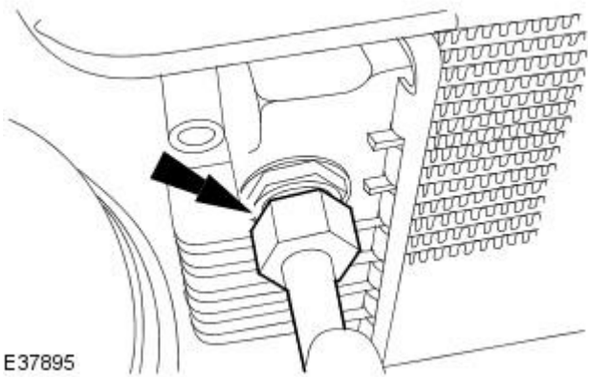

1. Carry out the air conditioning (A/C) system recovery procedure.
   For additional information, refer to Section 412-00 Climate Control System - General Information.
2. NOTE: Cap the exposed ports.

   Disconnect the transmission fluid cooler supply tube.

   - Remove and discard the O-ring seal.

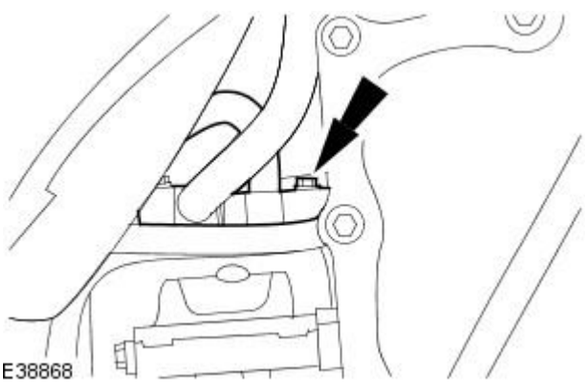

3. Remove the left-hand catalytic converter.
   For additional information, refer to Section 309-00 Exhaust System.
4. NOTE: Cap the exposed ports.

   Disconnect the air conditioning line.

   - Remove and discard the O-ring seal.

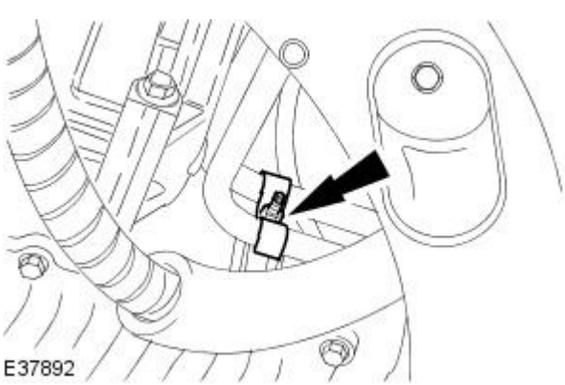

5. Remove the left-hand engine mount.
   For additional information, refer to Section 303-01 Engine.
6. Remove the transmission fluid cooler retaining.

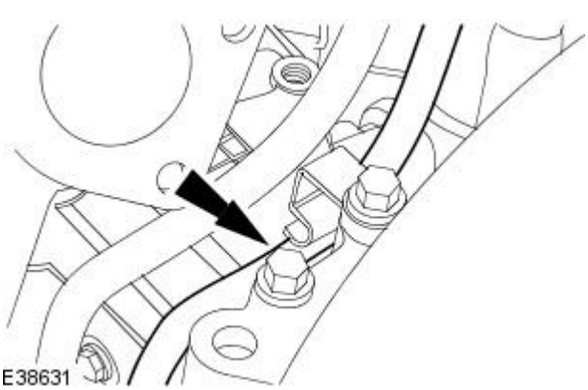

7. Detach the transmission fluid cooler supply tube.

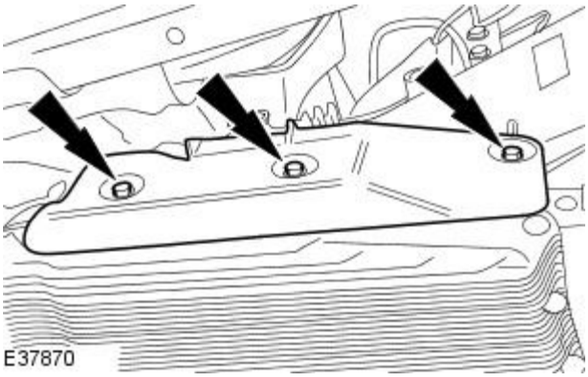

8. NOTE: Right-hand shown, left-hand similar.

Remove the transmission heat shield.

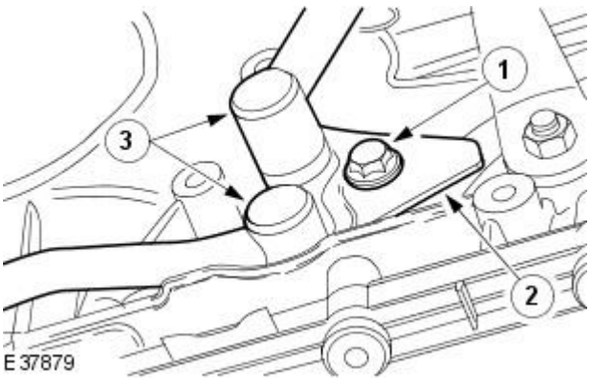

9. Detach the transmission fluid cooler supply tube and return tube.

1. Remove the retaining bolt.
2. Remove the retaining plate.

9. CAUTION: Make sure the transmission fluid cooler tubes are not removed from the automatic transmission by using a pry bar. Failure to follow this instruction may result in damage to the vehicle.

3. Detach the transmission fluid cooler tubes.

- Allow the transmission fluid to drain into a suitable container.

10. Remove the transmission fluid cooler supply tube.

Installation

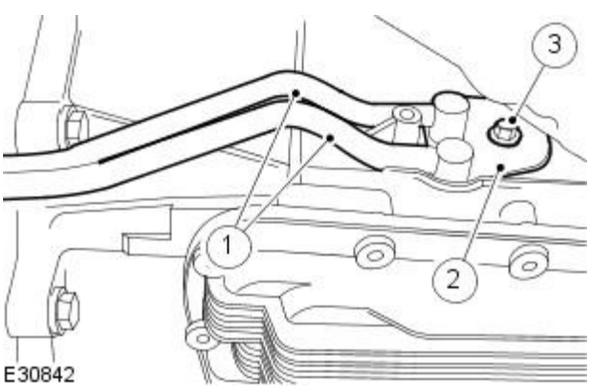

1. NOTE: Install new O-ring seals.

Attach the transmission fluid cooler tubes.

1. Attach the transmission fluid cooler tubes.
2. Install the retaining plate.
3. Install the retaining bolt .

- Tighten to 23 Nm.

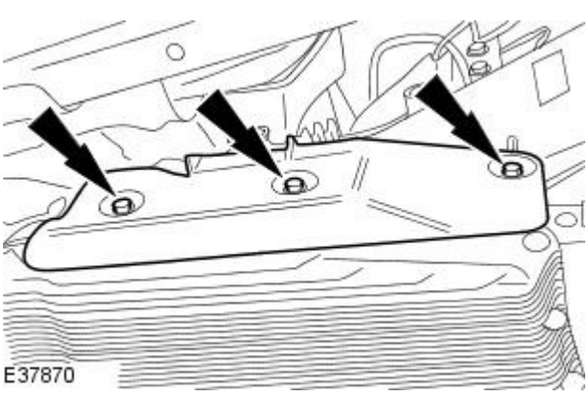

2. NOTE: Right-hand shown, left-hand similar.

Install the transmission heat shield.

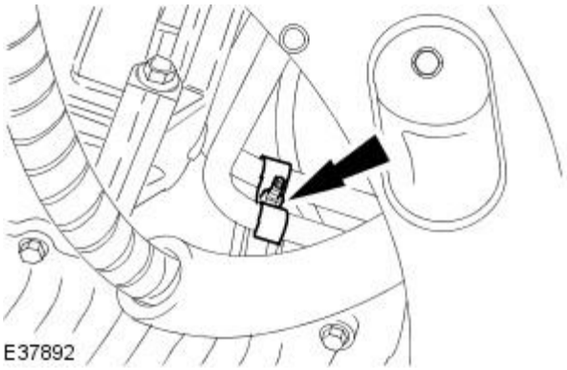

3. Install the transmission fluid cooler tube retaining bracket.

4. Install the left-hand engine mount.
For additional information, refer to Section 303-01 Engine.

5. Install the left-hand catalytic converter.
For additional information, refer to Section 309-00 Exhaust System.

6. NOTE: Uncap the exposed ports.

• NOTE: Install a new O-ring seal.

Connect the air conditioning line.

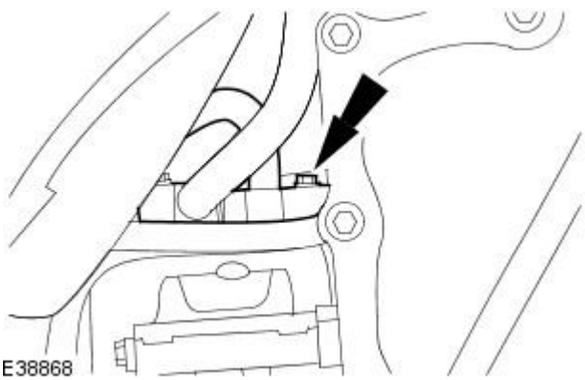

7. Lower the vehicle.

8. NOTE: Uncap the exposed ports.

• NOTE: Install a new O-ring seal.

Connect the transmission fluid cooler supply pipe.

- Tighten to 20 Nm.

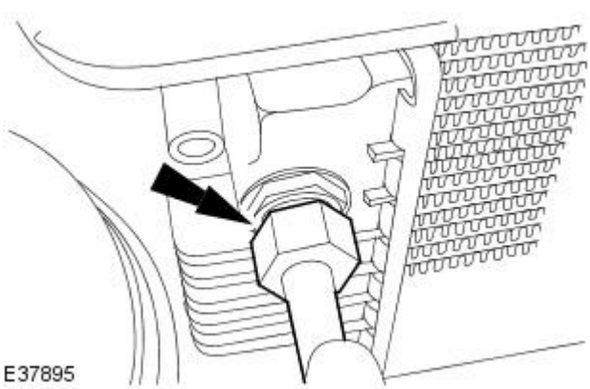

9. Carry out transmission fluid level check.
For additional information, refer to Section 307-01 Automatic Transmission/Transaxle.

10. Carry out the air conditioning (A/C) evacuation and charging procedure.
For additional information, refer to Section 412-00 Climate Control System - General Information.

Published: 11-May-2011

Automatic Transmission / Transaxle External Controls -

Torque Specifications

Description	Nm	lb-ft	lb-in
Transmission selector lever retaining nuts	11	8	-
Selector lever cable and bracket retaining bolts	11	8	-
Selector lever cable adjustment nuts	20	15	-
Brake shift interlock actuator retaining nuts	5	-	44
Selector lever pivot bracket retaining nut and bolt	10	7	-
Brake shift interlock lever retaining nut	12	9	-

Automatic Transmission / Transaxle External Controls - External Controls

Description and Operation

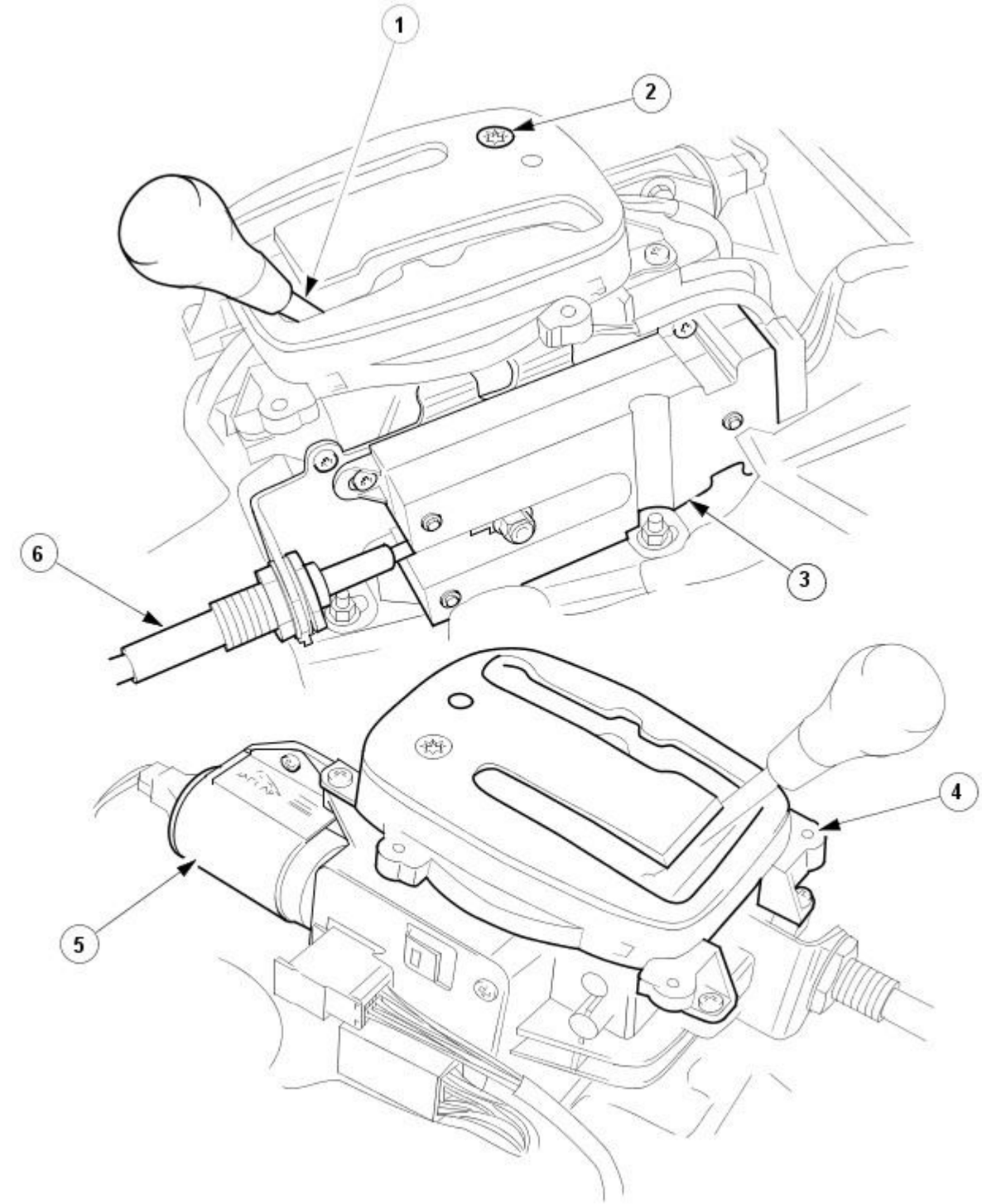

E38113

Parts List

Item	Part Number	Description
1	—	Transmission selector lever
2	—	Brake shift interlock actuator manual override access
3	—	Transmission control switch
4	—	Selector lever indicator assembly
5	—	Brake shift interlock actuator
6	—	Selector lever cable and bracket

Transmission selector lever

The transmission selector lever:

- has eight positions: Park, Reverse, Neutral, Drive, Fifth, Fourth, Third and Second.
- operates the automatic transmission selector in the Park, Reverse, Neutral, Drive positions by means of a cable.

- when moved to the left-hand, allows manual electronic selection of Fifth, Fourth, Third and Second gears.
- communicates the transmission selector lever position to the transmission control module (TCM) using electronic code through the Controlled Area Network (CAN) bus.
- uses the transmission control switch to generate the electronic code.

The eight transmission selector positions are:

- P: The transmission is mechanically locked (starting available).
- R: Reverse gear.
- N: No power to the rear wheels (starting available).
- D: All six forward gears available.
- 5: Upshift to fifth gear only.
- 4: Upshift to fourth gear only.
- 3: Upshift to third gear only.
- 2: Upshift to second gear only.

Automatic transmission gear selector

The gear selector at the transmission unit:

- is connected to the transmission selector lever by a selector lever cable and bracket.
- operates the manual selector valve, which is part of the electro-hydraulic control unit.

Selector lever indicator assembly:

- provides a red transmission lever position illumination to indicate the selected gear.
- illuminates the security system LED when an output from the ECM is received.

Sport mode switch

The sport mode switch:

- allows the driver to select or de-select the automatic transmission sport mode.
- allows the automatic transmission to operate normally when the sport mode is selected, but under acceleration the gear shift points are extended to make full use of the engine power reserves.
- allows the driver to drive the vehicle in the "D" position with the full automatic transmission shift or manually shift gears in the "second, third, fourth and fifth" positions.
- is illuminated when Sport mode is selected.
- communicates with the TCM through the CAN to show the sport mode switch status.

Brake shift interlock actuator:

- prevents the transmission selector lever from being moved from the Park position, unless the ignition switch is in the "ON" position and the brake pedal is applied.
- is controlled by an input from the Electronic Control Module (ECM).

Park position switch

- is hard-wired to the ECM.
- detects when the gear selector lever is moved to the Park position.

Transmission control switch:

- detects the position of the selector lever.
- contains two multi-track slider switches, the upper track controls positions P R N D and the lower track controls positions 5 4 3 2.
- communicates with the TCM through the CAN.

Automatic Transmission / Transaxle External Controls - External Controls

Diagnosis and Testing

Inspection and verification

WARNING: Danger of accident. Apply the parking brake. Shift the gear selector lever to **P**. Failure to follow these instructions may result in personal injury.

1. **1.** Verify the customer concern.
2. **2.** Confirm which, if any, warning lights and/or messages were displayed on the instrument cluster.

• NOTE: If any warning lights and/or messages were displayed when the fault occurred, refer to the Driver Information table for DTCs associated with the display, then to the DTC index table for possible sources and actions. Some warnings will appear to clear when the ignition is cycled. This is often because the warning has flagged as a result of one of the vehicle's on-board diagnostic routines having run to detect the fault. If the same routine is not run when the ignition is switched ON, the warning will not reflag until the routine does run. See the DTC summaries for drive cycle routines.

3. **3.** Visually inspect for obvious signs of mechanical or electrical damage.

Visual Inspection Chart

Mechanical	Electrical
• Visibly damaged or worn parts • Transmission selector cable adjustment REFER to Selector Lever Cable Adjustment - in this section.	• Fuse(s) • Loose or corroded electrical connector(s)

4. **4.** If an obvious cause for an observed or reported concern is found, correct the cause (if possible) before proceeding to the next step.
5. **5.** Where the Jaguar approved diagnostic system is available, complete the S93 report before clearing any or all fault codes from the vehicle.
6. **6.** If the cause is not visually evident and the Jaguar approved diagnostic system is not available, use a fault code reader to retrieve any fault codes before proceeding to the Diagnostic Trouble Code (DTC) Index Chart, or the Symptom Chart if no DTCs are set.
7. **7.** Using the Jaguar approved diagnostic system where available, and a scan tool where not, check the freeze frame data for information on the conditions applicable when the fault was flagged. The format of this will vary, depending on the tool used, but can provide information useful to the technician in diagnosing the fault.

Symptom Chart

CAUTION: When probing connectors to take measurements in the course of the pinpoint tests, use the adaptor kit, part number 3548-1358-00.

• NOTE: Check and rectify basic faults before beginning diagnostic routines involving pinpoint tests.

• NOTE: Check and rectify basic faults before beginning diagnostic routines involving pinpoint tests.

• NOTE: When performing electrical voltage or resistance tests, always use a digital multimeter (DMM) accurate to 3 decimal places, and with an up-to-date calibration certificate. When testing resistance, always take the resistance of the DMM leads into account.

Symptom (general)	Symptom (specific)	Possible source	Action
Gear selector illumination malfunction	Gear selector position indicator misaligned with position selected	• Selector lever indicator adjustment incorrect • Selector lever indicator failure • CAN bus communication failure	For selector lever adjustment and replacement, REFER to Selector Lever Indicator Assembly - in this section. For CAN tests, REFER to Section 418-00 Module Communications Network.
Erratic selection of D to 5 shift	Linear switch does not detect lever movement from D to 5	• Position alignment switch circuit failure • Position alignment microswitch failure	For position alignment switch circuit tests, GO to Pinpoint Test C.
Erratic operation of brake shift interlock	Interlock function will not operate/release	• Not-in-Park microswitch circuit failure • Not-in-Park microswitch failure • Brake shift interlock solenoid circuit failure • Brake shift interlock solenoid failure	For not-in-park switch tests, GO to Pinpoint Test D. For interlock solenoid circuit tests, GO to Pinpoint Test E.
Erratic operation of the keylock solenoid	Keylock function will not operate/release	• Not-in-Park microswitch circuit failure • Not-in-Park microswitch failure • Keylock solenoid circuit failure • Keylock solenoid failure	For not-in-park switch circuit tests, GO to Pinpoint Test D. For keylock solenoid circuit tests, GO to Pinpoint Test F.

Diagnostic Trouble Code (DTC) Index

DTC	Description	Possible Source	Action
P0706	Gear selector position plausibility fault	• TCM/linear switch module CAN fault • Linear switch module failure	For TCM/linear switch module CAN fault, and module failure,

DTC	Description	Possible Source	Action
		• TCM/control valve failure	REFER to Section 418-00 Module Communications Network. For transmission mechanical failure, REFER to Section 307-01 Automatic Transmission/Transaxle.
P0709	Gear selector intermediate position fault	• Linear switch module failure	For linear switch module failure, REFER to Section 418-00 Module Communications Network.
P0860	Linear switch module CAN network malfunction	• CAN open circuit fault • CAN short circuit fault • Linear switch module failure	For CAN circuit faults or linear switch module failure, REFER to Section 418-00 Module Communications Network.
P1516	Gear change P/N driving malfunction	• ECM P/N circuit; short circuit to ground, short circuit to high voltage, high resistance • Gear selector cable adjustment incorrect • Linear switch module incorrect adjustment • Linear switch module/ECM CAN fault	For ECM P/N circuit tests, GO to Pinpoint Test B. For gear selector cable adjustment, REFER to Selector Lever Cable Adjustment - in this section. For linear switch module adjustment, REFER to Transmission control switch in this section. For CAN circuit faults, REFER to Section 418-00 Module Communications Network.
P1517	Gear change P/N starting malfunction	• ECM P/N circuit; short circuit to ground, short circuit to high voltage, high resistance • Gear selector cable adjustment incorrect	For ECM P/N circuit tests, GO to Pinpoint Test B. For gear selector cable adjustment, REFER to Selector Lever Cable Adjustment - in this section. For CAN circuit faults, REFER to Section 418-00 Module Communications Network.
P1774	CAN J-gate time-out	• CAN open circuit fault - TCM to linear switch module • CAN short circuit fault • Linear switch module failure	For CAN circuit faults or linear switch module failure, REFER to Section 418-00 Module Communications Network.

Pinpoint Tests

PINPOINT TEST A : CHECK FOR POWER AND GROUND SUPPLIES TO THE LINEAR SWITCH MODULE	
TEST CONDITIONS	**DETAILS/RESULTS/ACTIONS**
A1: CHECK IGNITION SUPPLY VOLTAGE	
	1 Disconnect the linear switch module electrical connector, FC100.
	2 Turn the ignition switch to the ON position.
	3 Meaure the voltage between FC100, pin 04 (WR) and GROUND.
	Is the voltage less than 10 volts? **Yes** REPAIR the circuit between the linear switch module and battery. This circuit includes the driver's side fuse box, (fuse 16) the ignition positive relay, and the high power protection module. For additional information, refer to the wiring diagrams. CLEAR the DTC. TEST the system for normal operation. **No** GO to A2.
A2: CHECK GROUND CIRCUIT	
	1 Turn the ignition switch to the OFF position.
	2 Meaure the resistance between FC100, pin 11 (B) and GROUND.
	Is the resistance greater than 5 ohms? **Yes** REPAIR the high resistance circuit. For additional information, refer to the wiring diagrams. CLEAR the DTC. TEST the system for normal operation. **No** Check for DTCs. Carry out tests indicated by the DTCs logged.

PINPOINT TEST B : DTC P1516, P1517; GEAR CHANGE P/N DRIVING/STARTING MALFUNCTION	
TEST CONDITIONS	**DETAILS/RESULTS/ACTIONS**
B1: CHECK THE ECM TO TCM CIRCUIT FOR HIGH RESISTANCE	
	1 Disconnect the battery negative terminal.
	2 Disconnect the ECM electrical connector, EM80.
	3 Disconnect the TCM electrical connector, GB02.
	4 Measure the resistance between EM80, pin 31 (G) and GB02, pin 10 (G).
	Is the resistance greater than 5 ohms? **Yes** REPAIR the high resistance circuit. For additional information, refer to the wiring diagrams. CLEAR the DTC. TEST the system for normal operation. **No** GO to B2.
B2: CHECK THE ECM TO TCM CIRCUIT FOR SHORT TO HIGH VOLTAGE	
	1 Reconnect the battery negative terminal.
	2 Turn the ignition switch to the ON position.
	3 Measure the voltage between EM80, pin 31 (G) and GROUND.
	Is the voltage greater than 1 volt? **Yes** REPAIR the short circuit. For additional information, refer to the wiring diagrams. CLEAR the DTC. TEST the system for normal operation. **No** GO to B3.
B3: CHECK THE ECM TO TCM CIRCUIT FOR SHORT TO GROUND	

	1 Measure the resistance between EM80, pin 31 (G) and ground.
	Is the resistance less than 10,000 ohms? **Yes** REPAIR the short circuit. For additional information, refer to the wiring diagrams. CLEAR the DTC. TEST the system for normal operation. **No** Recheck the DTCs. Contact Dealer technical support for advice on possible ECM or TCM failure.

PINPOINT TEST C : CHECK THE POSITION ALIGNMENT SWITCH CIRCUIT	
TEST CONDITIONS	**DETAILS/RESULTS/ACTIONS**
C1: CHECK THE POSITION ALIGNMENT SWITCH LOGIC GROUND	
	1 Disconnect the position alignment switch electrical connector, FC105.
	2 Measure the resistance between FC105, pin 03 (B) and GROUND.
	Is the resistance greater than 5 ohms? **Yes** REPAIR the high resistance circuit. For additional information, refer to the wiring diagrams. TEST the system for normal operation. **No** GO to C2.
C2: CHECK THE POSITION ALIGNMENT SWITCH TO LINEAR SWITCH CIRCUIT FOR HIGH RESISTANCE	
	1 Disconnect the battery negative terminal.
	2 Disconnect the linear switch module electrical connector, FC100.
	3 Measure the resistance between FC105, pin 01 (BW) and FC100, pin) (BW).
	Is the resistance greater than 5 ohms? **Yes** REPAIR the high resistance circuit. For additional information, refer to the wiring diagrams. TEST the system for normal operation. **No** GO to C3.
C3: CHECK THE POSITION ALIGNMENT SWITCH TO LINEAR SWITCH CIRCUIT FOR SHORT TO HIGH VOLTAGE	
	1 Reconnect the battery negative terminal.
	2 Measure the voltage between FC105, pin 01 (BW) and GROUND.
	Is the voltage greater than 3 volts? **Yes** REPAIR the short circuit. For additional information, refer to the wiring diagrams. TEST the system for normal operation. **No** GO to C4.
C4: CHECK THE POSITION ALIGNMENT SWITCH TO LINEAR SWITCH CIRCUIT FOR SHORT TO GROUND	
	1 Measure the resistance between FC105, pin 01 (BW) and GROUND.
	Is the resistance less than 10,000 ohms? **Yes** REPAIR the short circuit. For additional information, refer to the wiring diagrams. TEST the system for normal operation. **No** INSTALL a new position alignment switch. CLEAR the DTC. TEST the system for normal operation.

PINPOINT TEST D : CHECK THE NOT-IN-PARK SWITCH CIRCUIT	
TEST CONDITIONS	**DETAILS/RESULTS/ACTIONS**
D1: CHECK THE NOT-IN-PARK SWITCH LOGIC GROUND	
	1 Disconnect the not-in-park switch electrical connector, FC87
	2 Measure the resistance between FC87, pin 03 (BK) and GROUND.
	Is the resistance greater than 5 ohms? **Yes** REPAIR the high resistance circuit. For additional information, refer to the wiring diagrams. TEST the system for normal operation. **No** GO to D2.
D2: CHECK THE NOT-IN-PARK SWITCH TO BODY PROCESSOR MODULE (BPM) CIRCUIT FOR HIGH RESISTANCE	
	1 Disconnect the battery negative terminal.
	2 Disconnect the BPM electrical connector, FC14.
	3 Measure the resistance between FC87, pin 01 (YB) and FC14, pin 58 (YB).
	Is the resistance greater than 5 ohms? **Yes** REPAIR the high resistance circuit. For additional information, refer to the wiring diagrams. TEST the system for normal operation. **No** GO to D3.
D3: CHECK THE NOT-IN-PARK SWITCH TO BODY PROCESSOR MODULE (BPM) CIRCUIT FOR SHORT TO HIGH VOLTAGE	
	1 Reconnect the battery negative terminal.
	2 Measure the voltage between FC87, pin 01 (YB) and GROUND.
	Is the voltage greater than 3 volts? **Yes** REPAIR the short circuit. For additional information, refer to the wiring diagrams. TEST the system for normal operation. **No** GO to D4.
D4: CHECK THE NOT-IN-PARK SWITCH TO BODY PROCESSOR MODULE (BPM) CIRCUIT FOR SHORT TO GROUND	
	1 Measure the resistance between FC87, pin 01 (YB) and GROUND.
	Is the resistance less than 10,000 ohms? **Yes** REPAIR the short circuit. For additional information, refer to the wiring diagrams. TEST the system for normal operation. **No**

	INSTALL a new not-in-park switch. CLEAR the DTC. TEST the system for normal operation.

PINPOINT TEST E : CHECK THE INTERLOCK SOLENOID CIRCUIT	
TEST CONDITIONS	**DETAILS/RESULTS/ACTIONS**
E1: CHECK THE INTERLOCK SOLENOID GROUND	
	1 Disconnect the interlock solenoid electrical connector, FC86.
	2 Measure the resistance between FC86, pin 02 (B) and GROUND.
	Is the resistance greater than 5 ohms? **Yes** REPAIR the high resistance circuit. For additional information, refer to the wiring diagrams. TEST the system for normal operation. **No** GO to E2.
E2: CHECK THE INTERLOCK SOLENOID OUTPUT FROM BPM	
	1 Turn the ignition switch to the ON position.
	2 Apply the footbrake.
	3 Measure the voltage between FC86, pin 01 (OG) and GROUND.
	Is the voltage less than 10 volts? **Yes** GO to E3. **No** INSTALL a new interlock solenoid. REFER to Brake Shift Interlock Actuator - in this section. TEST the system for normal operation.
E3: CHECK THE INTERLOCK SOLENOID OUTPUT CIRCUIT FROM BPM FOR HIGH RESISTANCE	
	1 Disconnect the battery negative terminal.
	2 Disconnect the BPM electrical connector, FC14.
	3 Measure the resistance between FC86, pin 01 (OG) and FC14, pin 48 (OG).
	Is the resistance greater than 5 ohms? **Yes** REPAIR the high resistance circuit. For additional information, refer to the wiring diagrams. TEST the system for normal operation. **No** Check for DTCs indicating a brake switch malfunction. Check the brake switch signal to the BPM (SCP network)

PINPOINT TEST F : CHECK THE KEYLOCK SOLENOID CIRCUIT	
TEST CONDITIONS	**DETAILS/RESULTS/ACTIONS**
F1: CHECK THE KEYLOCK SOLENOID GROUND	
	1 Disconnect the keylock solenoid electrical connector, SC05.
	2 Measure the resistance between SC05, pin 02 (B) and GROUND.
	Is the resistance greater than 5 ohms? **Yes** REPAIR the high resistance circuit. For additional information, refer to the wiring diagrams. TEST the system for normal operation. **No** GO to F2.
F2: CHECK THE KEYLOCK SOLENOID OUTPUT FROM THE BPM	
	1 Turn the ignition switch to the ON position.
	2 Move the gear selector lever to the **D** position.
	3 Measure the voltage between SC05, pin 01 (RW) and GROUND.
	Is the voltage less than 10 volts? **Yes** GO to F3. **No** INSTALL a new keylock solenoid. TEST the system for normal operation.
F3: CHECK THE KEYLOCK SOLENOID OUTPUT CIRCUIT FROM THE BPM FOR HIGH RESISTANCE	
	1 Disconnect the battery negative terminal.
	2 Disconnect the BPM electrical connector, FC14.
	3 Measure the resistance between SC05, pin 01 (RW) and FC14, pin 51 (RW).
	Is the resistance greater than 5 ohms? **Yes** REPAIR the high resistance circuit. For additional information, refer to the wiring diagrams. TEST the system for normal operation. **No** Contact Dealer technical support for advice on possible BPM failure.

Published: 11-May-2011

Automatic Transmission / Transaxle External Controls - Brake Shift Interlock Actuator Manual Override

General Procedures

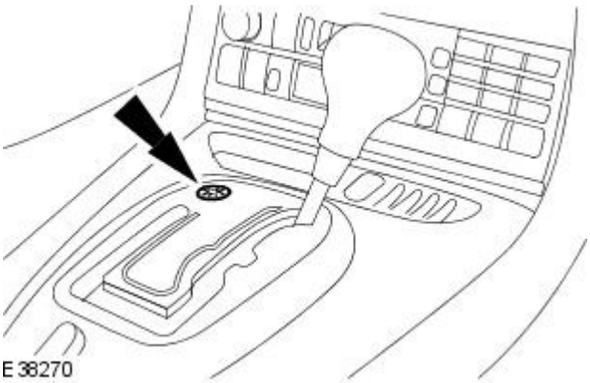

1. Remove the selector lever blanking screw.

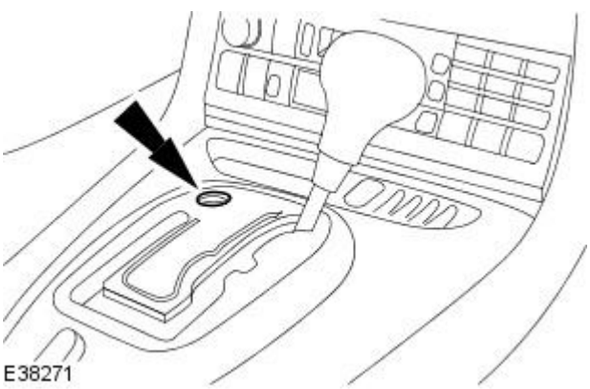

2. Using a suitable tool, press and hold the brake shift interlock actuator manual override and simultaneously move the selector lever to the "N" position.

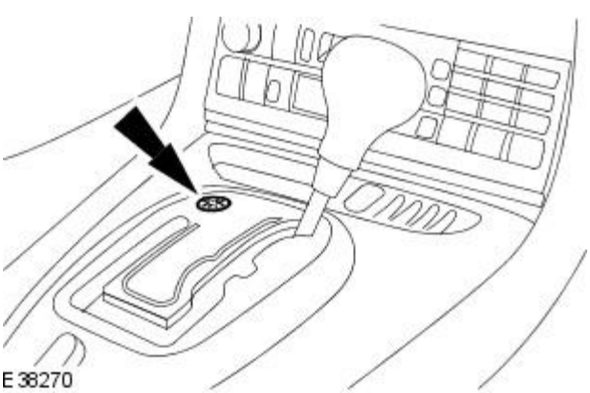

3. Remove the suitable tool.

4. Install the selector lever blanking screw.

Automatic Transmission / Transaxle External Controls - Selector Lever Cable Adjustment

General Procedures

1. Move the transmission selector lever to the "R" position.
2. Remove the floor console.
   For additional information, refer to Section 501-12 Instrument Panel and Console.
3. Detach the selector lever cable from the transmission selector lever linkage.

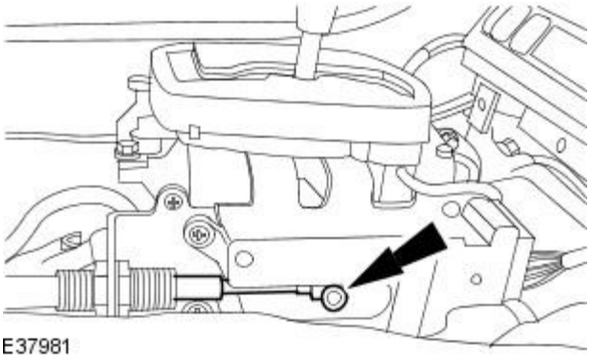

E37981

4. Detach the selector lever cable from the transmission selector lever bracket.

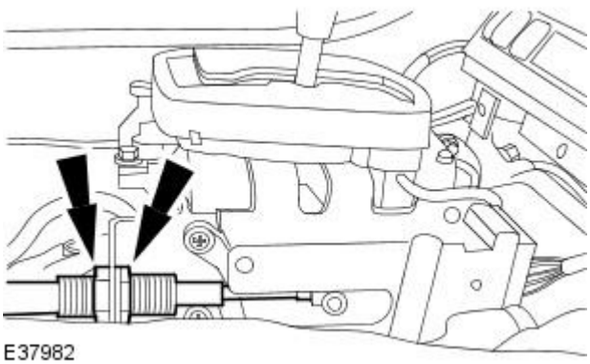

E37982

5. NOTE: Fully extend the selector cable, then retract the selector cable one detent.

   Make sure the selector lever cable is in the "R" position.
6. Make sure the transmission selector lever is in the "R" position.
7. NOTE: Make sure the selector cable and transmission selector lever have remained in the "R" position.

   Attach the selector lever cable to the transmission selector lever bracket.

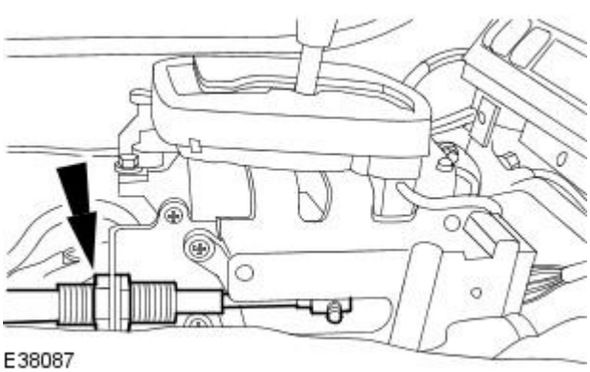

E38087

8. NOTE: Make sure the selector cable and transmission selector lever have remained in the "R" position.

   Attach the selector lever cable to the transmission selector lever linkage.

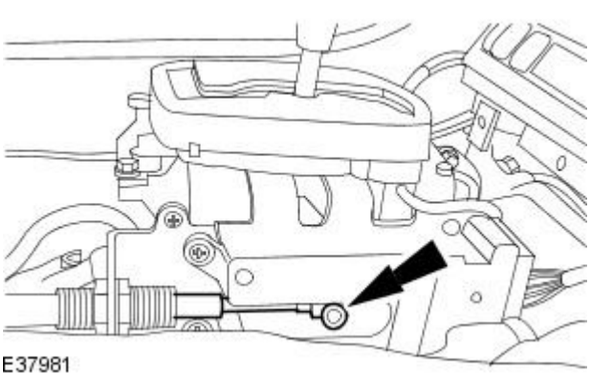

E37981

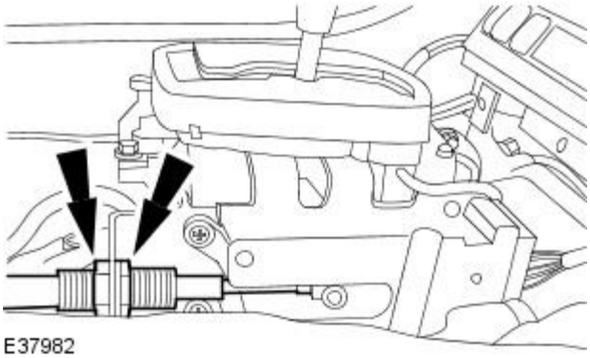

9. NOTE: Make sure the selector cable and transmission selector lever have remained in the "R" position.

Adjust the selector lever cable adjustment nuts to lock against the retaining bracket.

- Do not fully tighten the selector lever cable adjustment nuts.

10. Make sure all transmission selector lever positions select the relevant automatic transmission states.

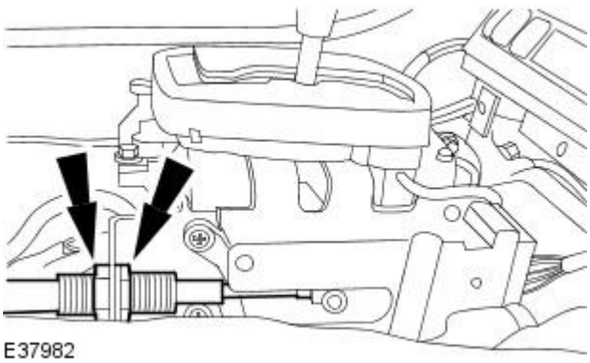

11. NOTE: When tightening the selector lever cable adjustment nuts, make sure both adjustment nuts are tightened to the specified torque simultaneously.

Tighten the selector lever cable adjustment nuts.

- Tighten to 20 Nm.

12. Install the floor console.
For additional information, refer to Section 501-12 Instrument Panel and Console.

Automatic Transmission / Transaxle External Controls - Transmission Control Switch Adjustment

General Procedures

1. Remove the floor console.
   For additional information, refer to Section 501-12 Instrument Panel and Console.
2. Turn the ignition switch to the ON position
3. Move the transmission selector lever to the "R" position.
4. Loosen the transmission control switch retaining screws.

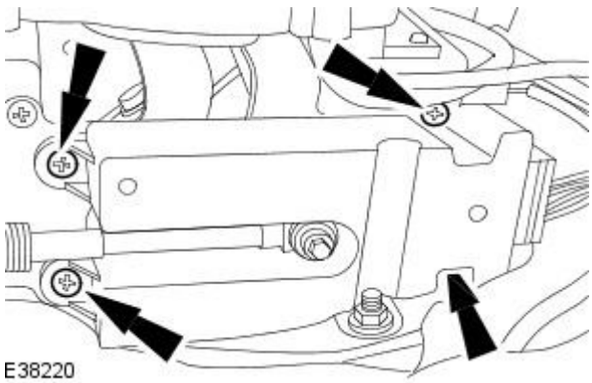

5. Adjust the transmission control switch until the "R" position of the selector lever indicator is illuminated.

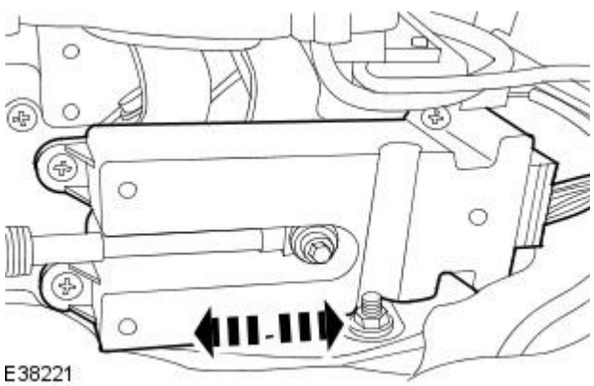

6. Tighten the transmission control switch retaining screws.

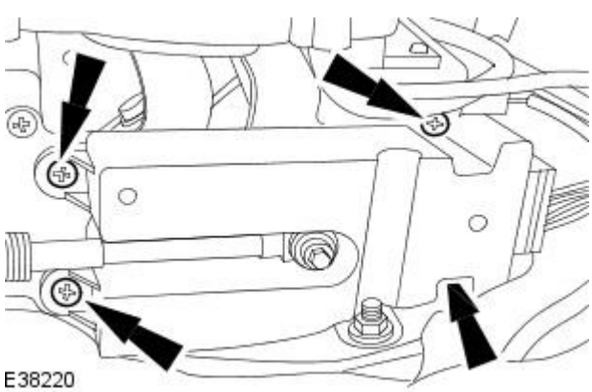

7. Make sure all transmission selector lever positions illuminate the relevant transmission selector lever indicator positions.
8. Make sure the engine starts when the transmission selector lever is in the "P" and "N" positions.
9. Install the floor console.
   For additional information, refer to Section 501-12 Instrument Panel and Console.

Automatic Transmission / Transaxle External Controls - Brake Shift Interlock Actuator

Removal and Installation

Removal

1. Remove the floor console.
   For additional information, refer to Section 501-12 Instrument Panel and Console.
2. Disconnect the brake shift interlock actuator electrical connector.

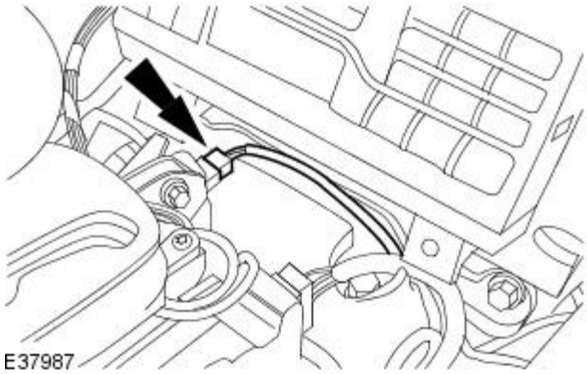

E37987

3. Disconnect the park position switch and selector lever indicator assembly electrical connectors.

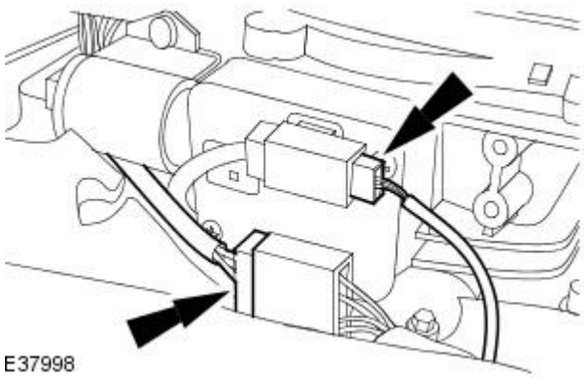

E37998

4. Detach the park position switch and selector lever indicator assembly electrical connectors.

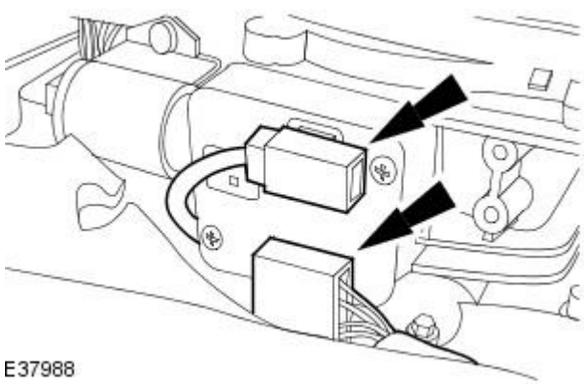

E37988

5. Remove the brake shift interlock actuator cover.

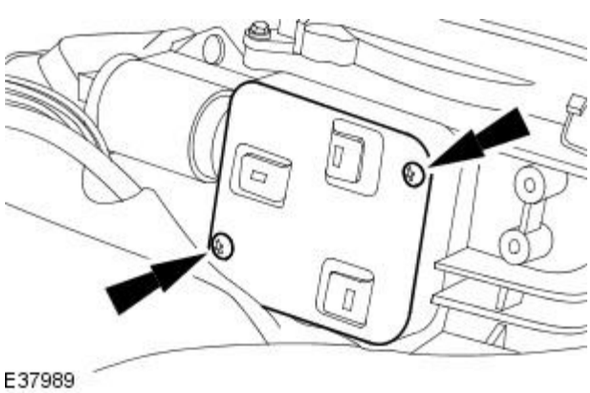

E37989

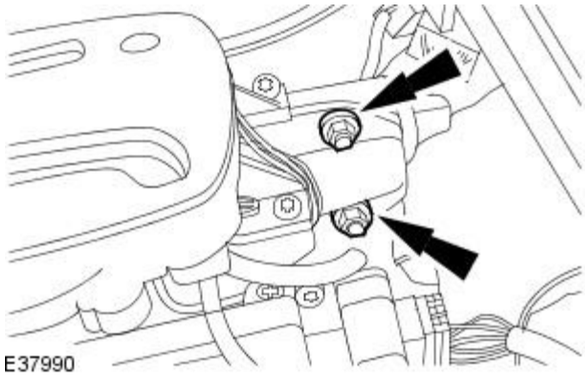

6. Remove the brake shift interlock actuator retaining nuts.

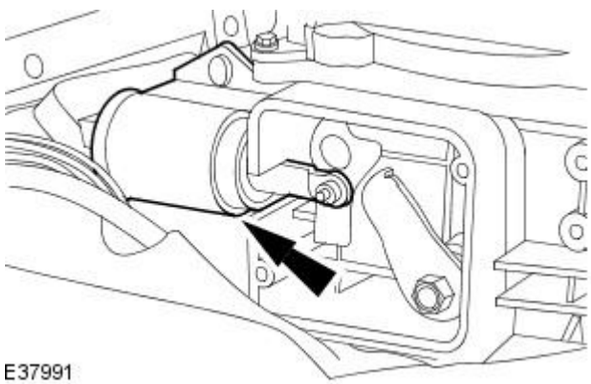

7. Remove the brake shift interlock actuator.

Installation

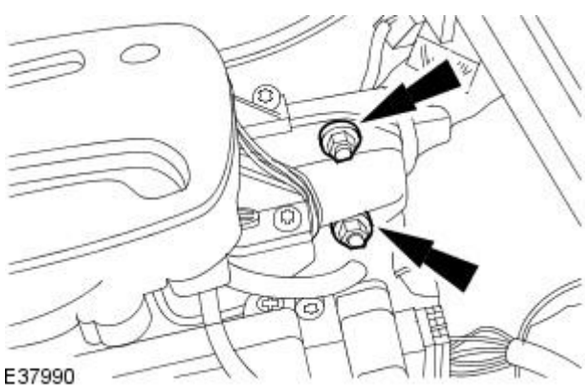

1. To install, reverse the removal procedure.

- Tighten to 5 Nm.

Automatic Transmission / Transaxle External Controls - Selector Lever Cable and Bracket

Removal and Installation

Removal

1. Move the transmission selector lever to the "R" position.
2. Remove the floor console.
   For additional information, refer to Section 501-12 Instrument Panel and Console.
3. Detach the selector lever cable from the transmission selector lever linkage.

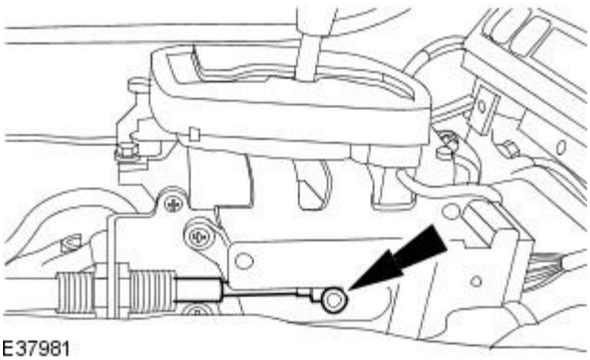

E37981

4. Detach the selector lever cable from the transmission selector lever bracket.

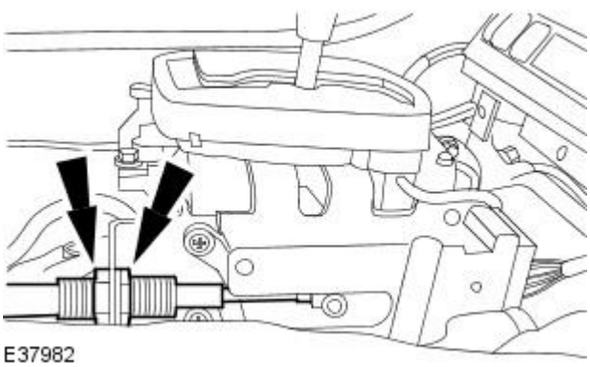

E37982

5. Remove the selector lever cable retaining tie strap.

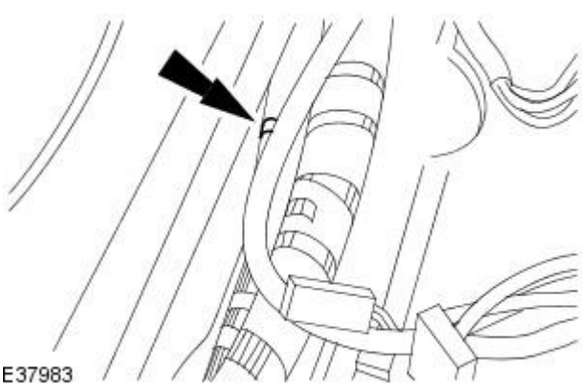

E37983

6. Raise and support the vehicle.
   For additional information, refer to Section 100-02 Jacking and Lifting.
7. Detach the selector lever cable from the automatic transmission gear selector.

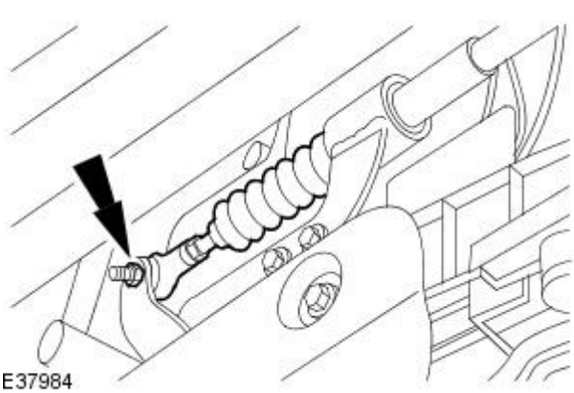

E37984

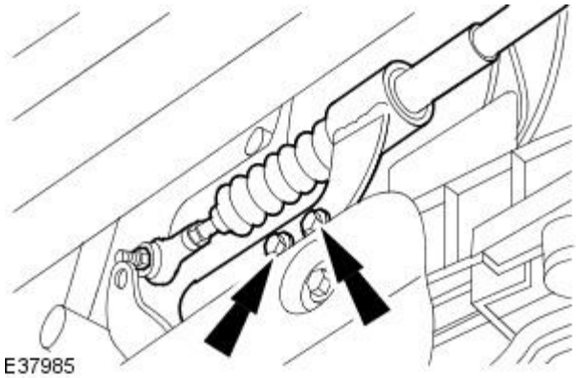

8. Detach the selector lever cable and bracket.

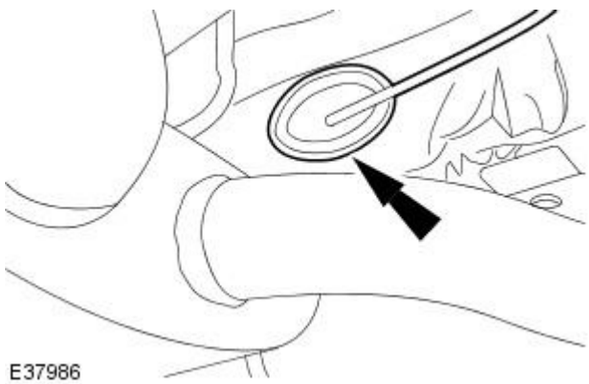

9. Detach the grommet and remove the selector lever cable and bracket.

Installation

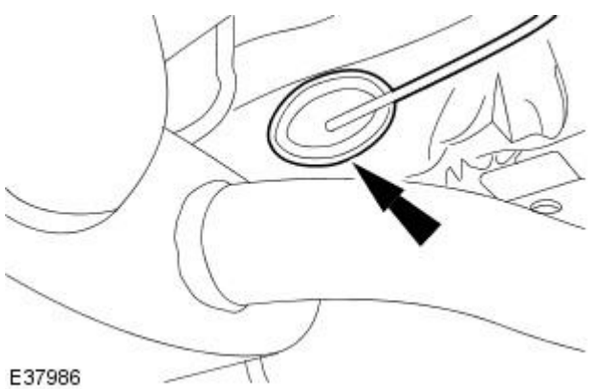

1. NOTE: Make sure the selector lever cable grommet is seated correctly.

Install the selector lever cable and bracket.

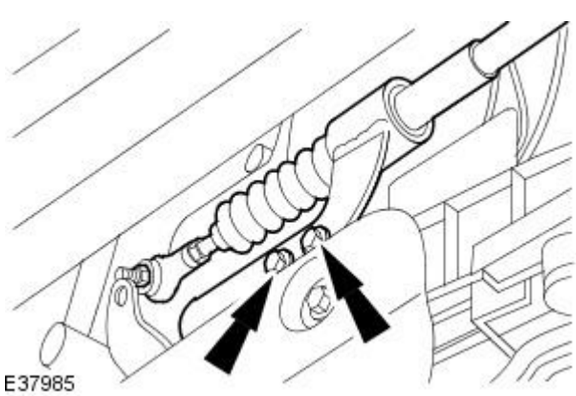

2. Attach the selector lever cable and bracket.

- Tighten to 11 Nm.

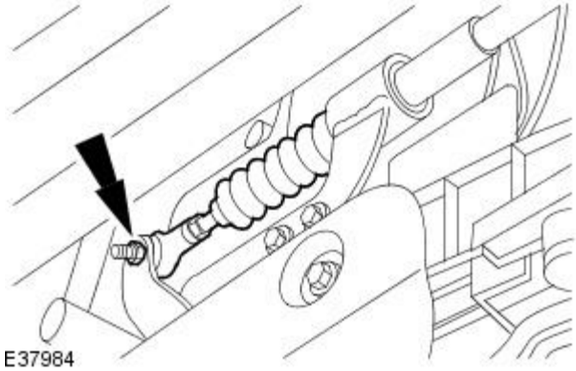

3. Attach the selector lever cable to the automatic transmission gear selector.

4. Lower the vehicle.

5. Install a new selector lever cable retaining tie strap.

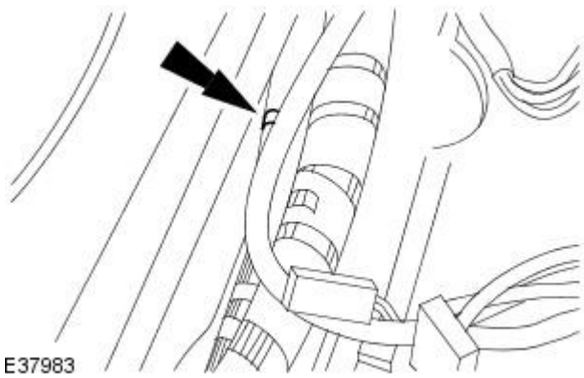

6. NOTE: Fully extend the selector cable, then retract the selector cable one detent.

Make sure the selector lever cable is in the "R" position.

7. Make sure the transmission selector lever is in the "R" position.

8. NOTE: Make sure the selector cable and transmission selector lever have remained in the "R" position.

Attach the selector lever cable to the transmission selector lever bracket.

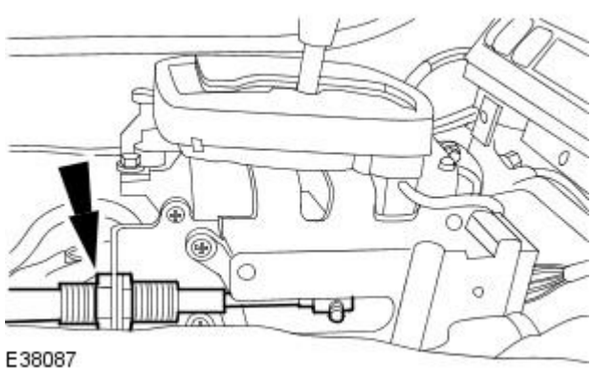

9. NOTE: Make sure the selector cable and transmission selector lever have remained in the "R" position.

Attach the selector lever cable to the transmission selector lever linkage.

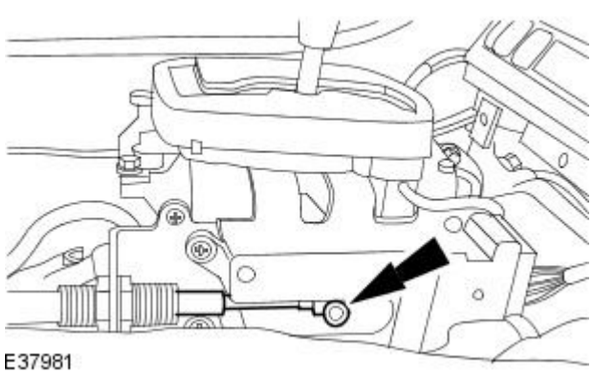

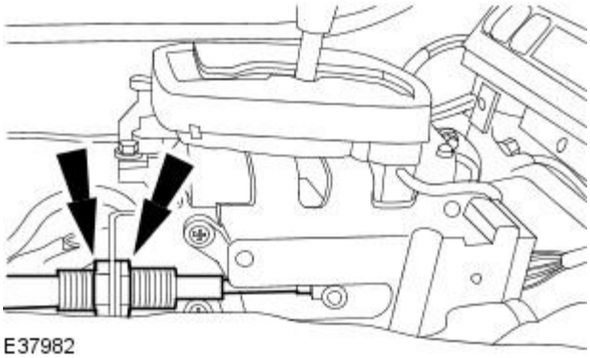

10. NOTE: Make sure the selector cable and transmission selector lever have remained in the "R" position.

Adjust the selector lever cable adjustment nuts to lock against the retaining bracket.

- Do not fully tighten the selector lever cable adjustment nuts.

11. Make sure all transmission selector lever positions select the relevant automatic transmission states.

12. NOTE: When tightening the selector lever cable adjustment nuts, make sure both adjustment nuts are tightened to the specified torque simultaneously.

Tighten the selector lever cable adjustment nuts.

- Tighten to 20 Nm.

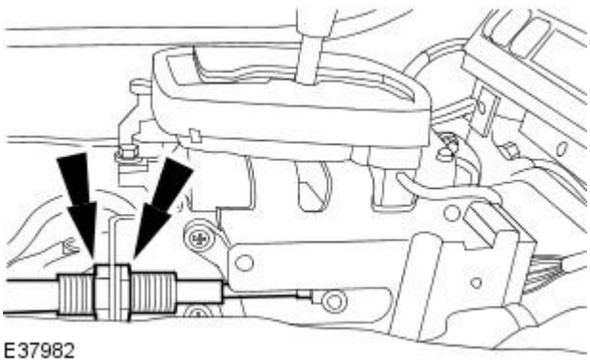

13. Install the floor console.
For additional information, refer to Section 501-12 Instrument Panel and Console.

Automatic Transmission / Transaxle External Controls - Selector Lever Indicator Assembly

Removal and Installation

Removal

1. Remove the floor console.
   For additional information, refer to Section 501-12 Instrument Panel and Console.
2. Disconnect the drive to fifth switch electrical connector.

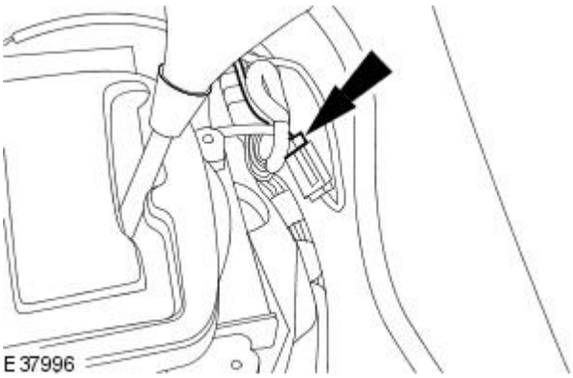

3. Remove the transmission selector lever knob.
   For additional information, refer to Transmission Selector Lever Knob - in this section.
4. Remove the transmission selector lever knob locking collar.

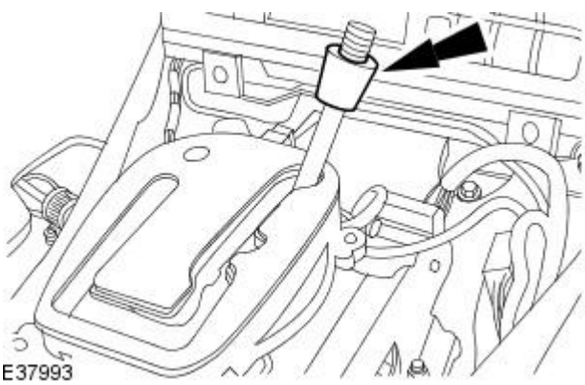

5. Disconnect the selector lever indicator assembly electrical connector.

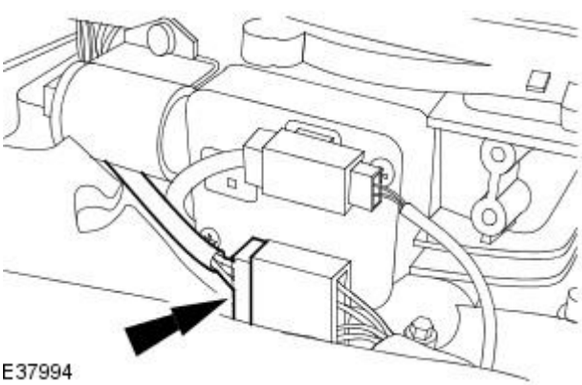

6. Remove the selector lever indicator assembly.

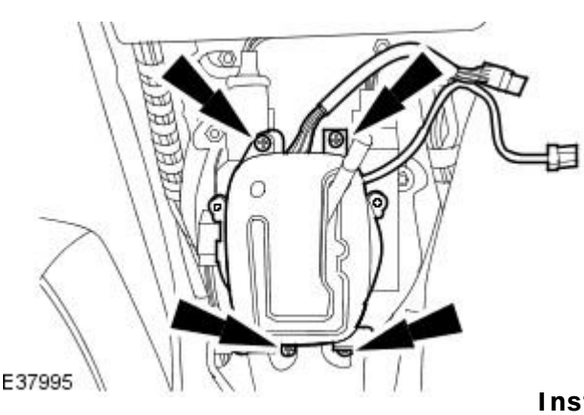

Installation

1. To install, reverse the removal procedure.

Automatic Transmission / Transaxle External Controls - Transmission Control Switch (TCS)

Removal and Installation

Removal

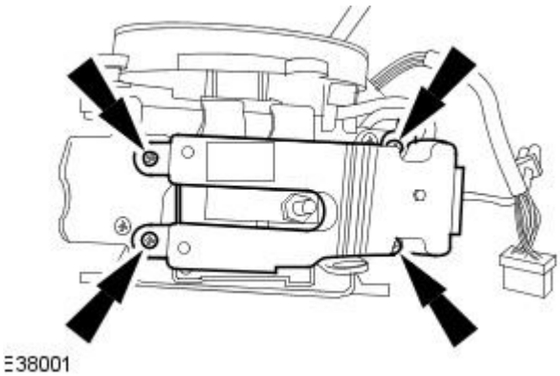

1. Remove the transmission selector lever.
   For additional information, refer to Transmission Selector Lever - in this section.
2. Remove the transmission control switch.

Installation

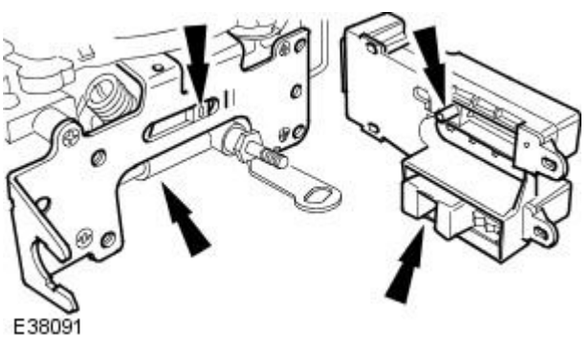

1. Align the transmission control switch to the transmission selector lever.

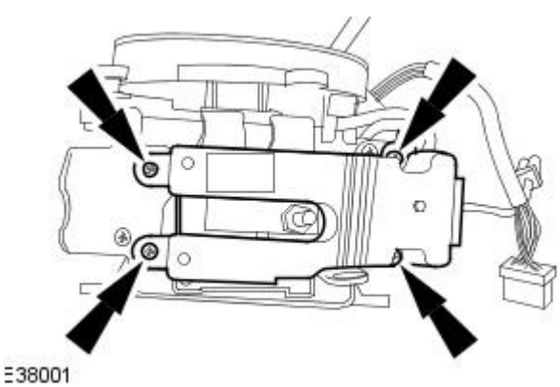

2. Loosely install the transmission control switch.

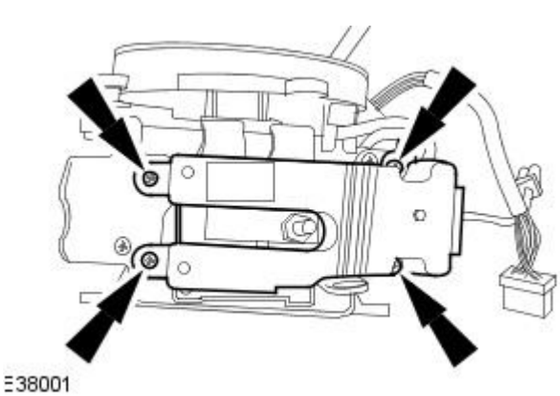

3. Move the selector lever to position 4.
4. Hold the selector lever in position 4 and adjust the transmission control switch .
5. Tighten the transmission control switch retaining screws.
6. Move the selector lever to all positions to check the transmission control switch is correctly aligned.

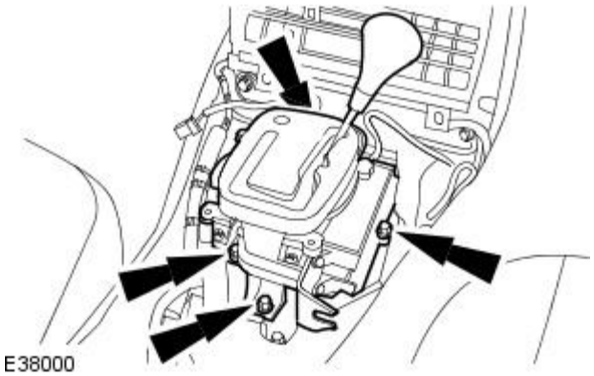

7. Install the transmission selector lever.

- Tighten to 11 Nm.

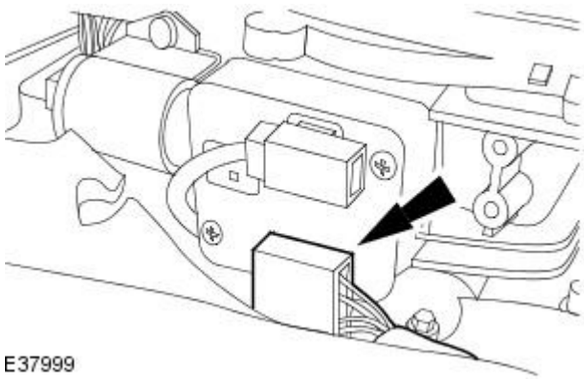

8. Attach the wiring harness electrical connector.

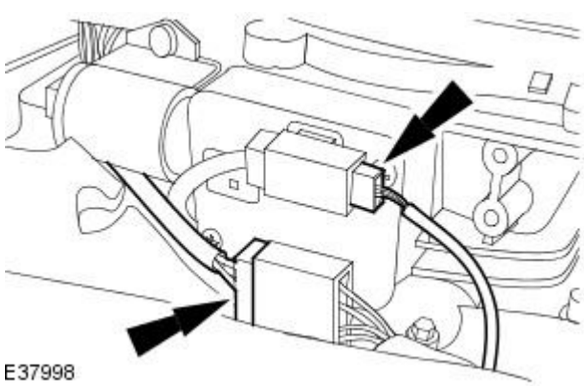

9. Connect the park position switch and selector lever indicator assembly electrical connectors.

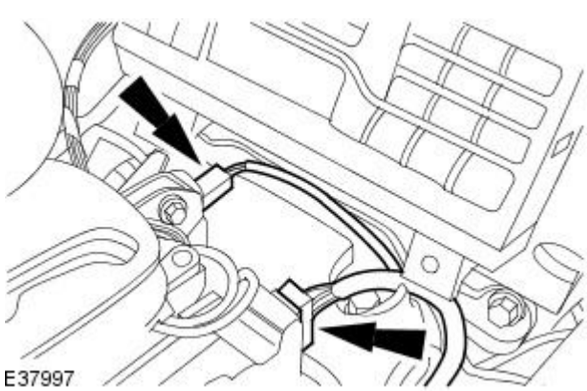

10. Connect the brake shift interlock actuator and transmission control switch electrical connectors.

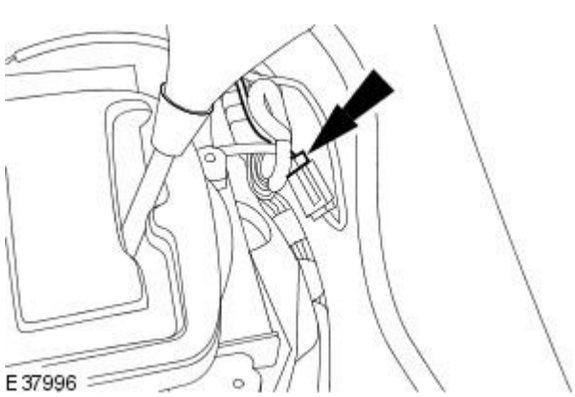

11. Connect the drive to fifth switch electrical connector.

12. NOTE: Fully extend the selector cable, then retract the selector cable one detent.

Make sure the selector lever cable is in the "R" position.

13. Move the transmission selector lever to the "R" position.

14. NOTE: Make sure the selector cable and transmission selector lever have remained in the "R" position.

Attach the selector lever cable to the transmission selector lever bracket.

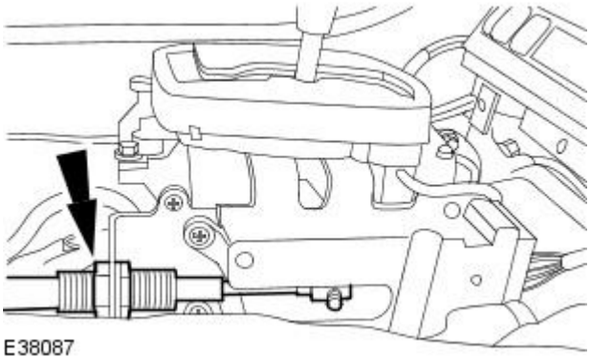

E38087

15. NOTE: Make sure the selector cable and transmission selector lever have remained in the "R" position.

Attach the selector lever cable to the transmission selector lever linkage.

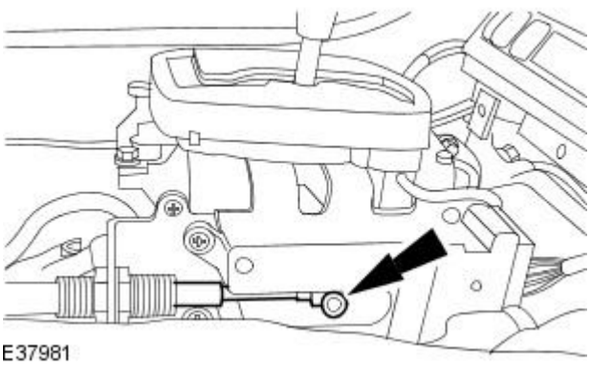

E37981

16. NOTE: Make sure the selector cable and transmission selector lever have remained in the "R" position.

Adjust the selector lever cable adjustment nuts to lock against the retaining bracket.

- Do not fully tighten the selector lever cable adjustment nuts.

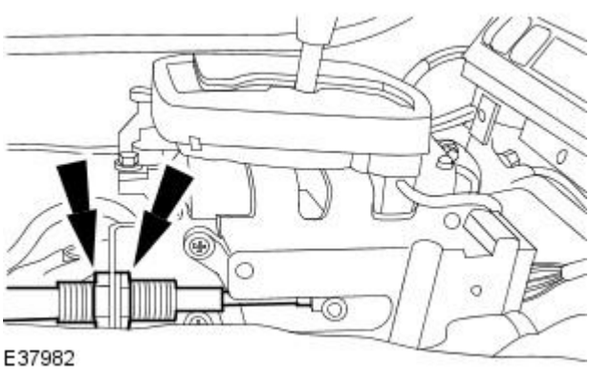

E37982

17. Make sure all transmission selector lever positions select the relevant automatic transmission states.

18. NOTE: When tightening the selector lever cable adjustment nuts, make sure both adjustment nuts are tightened to the specified torque simultaneously.

Tighten the selector lever cable adjustment nuts.

- Tighten to 20 Nm.

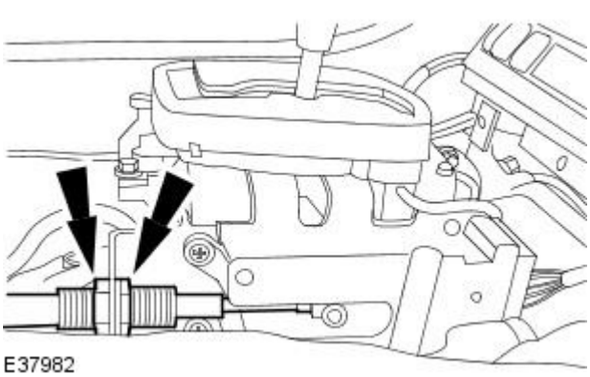

E37982

19. Turn the ignition switch to the ON position

20. Move the transmission selector lever to the "R" position.

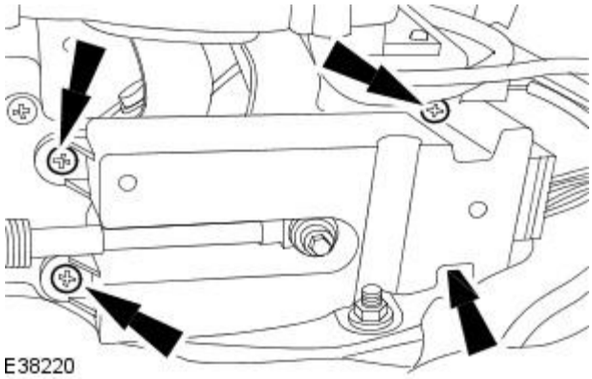

21. Loosen the transmission control switch retaining screws.

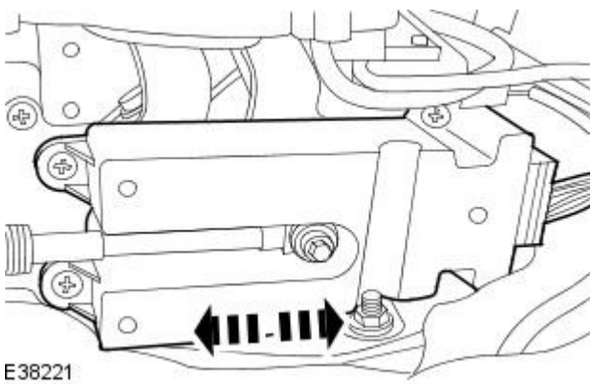

22. Adjust the transmission control switch until the "R" position of the selector lever indicator is illuminated.

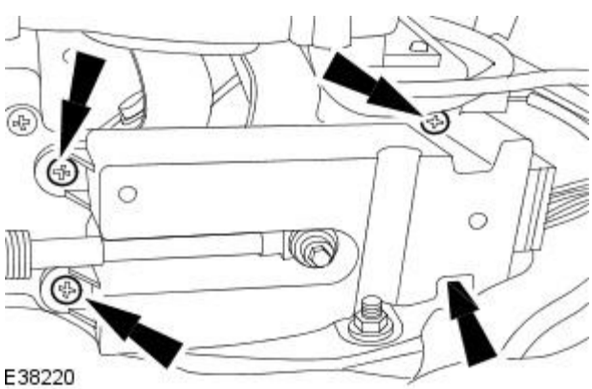

23. Tighten the transmission control switch retaining screws.

24. Make sure all transmission selector lever positions illuminate the relevant transmission selector lever indicator positions.

25. Make sure the engine starts when the transmission selector lever is in the "P" and "N" positions.

26. Install the floor console.
For additional information, refer to Section 501-12 Instrument Panel and Console.

Automatic Transmission / Transaxle External Controls - Selector Lever Assembly

Removal and Installation

Removal

1. Move the transmission selector lever to the "R" position.
2. Remove the floor console.
   For additional information, refer to Section 501-12 Instrument Panel and Console.
3. Detach the selector lever cable from the transmission selector lever linkage.

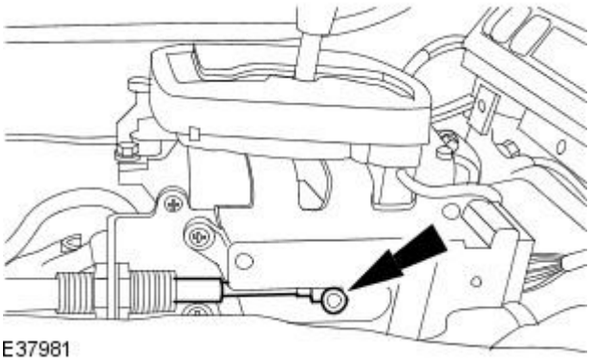

E37981

4. Detach the selector lever cable from the transmission selector lever bracket.

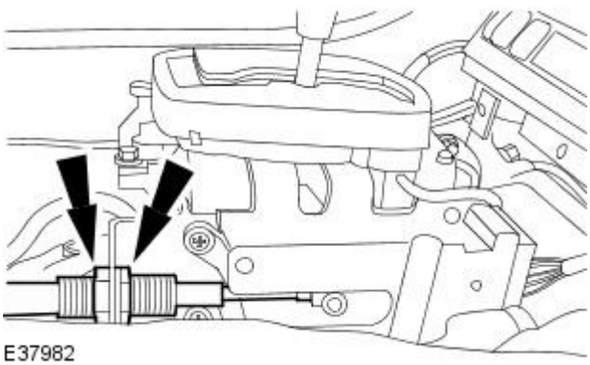

E37982

5. Disconnect the drive to fifth switch electrical connector.

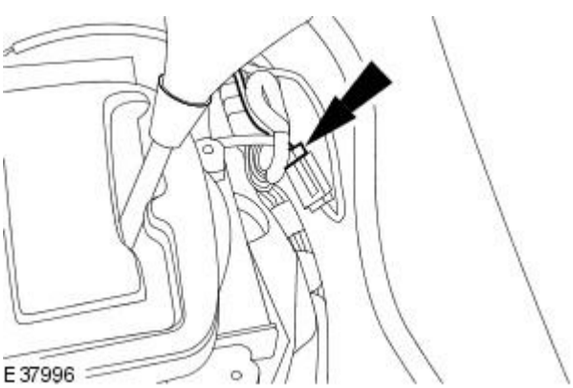

E37996

6. Disconnect the brake shift interlock actuator and transmission control switch electrical connectors.

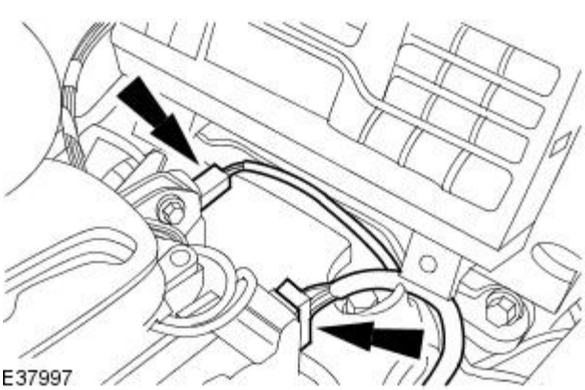

E37997

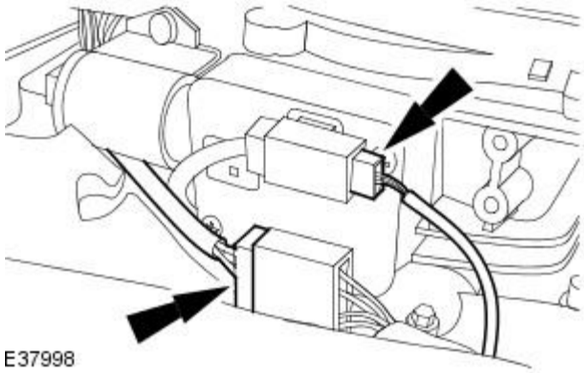

7. Disconnect the park position switch and selector lever indicator assembly electrical connectors.

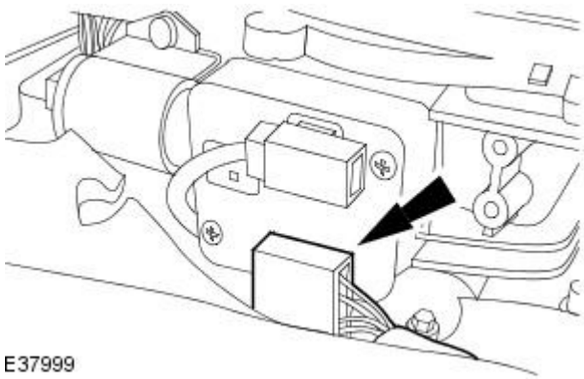

8. Detach the wiring harness electrical connector.

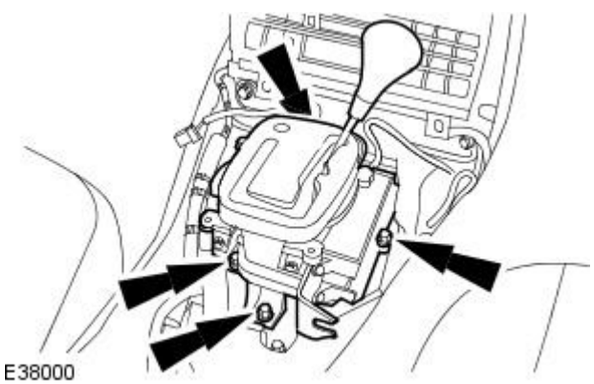

9. Remove the transmission selector lever.

Installation

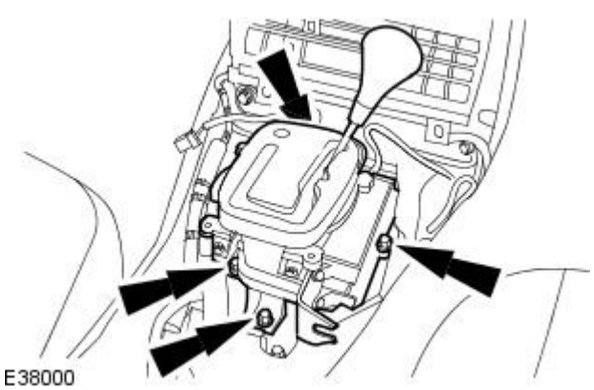

1. Install the transmission selector lever.

- Tighten to 11 Nm.

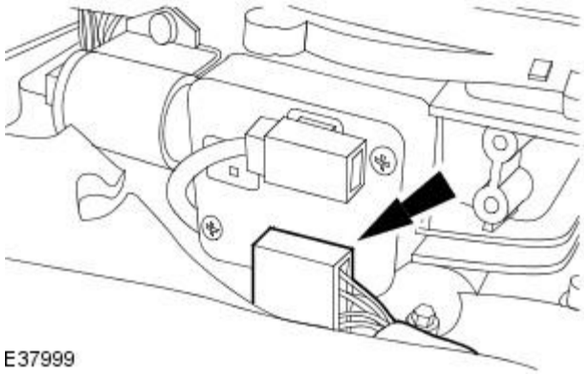

2. Attach the selector lever indicator assembly electrical connector.

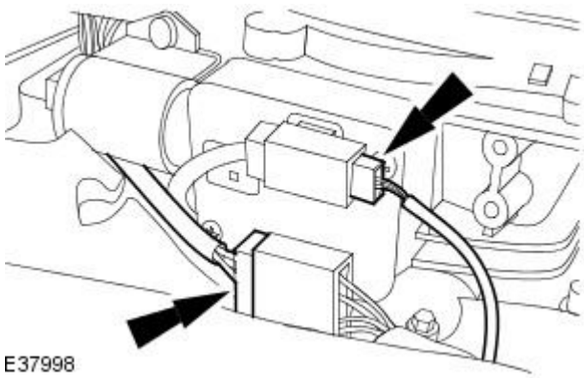

3. Connect the park position switch and selector lever indicator assembly electrical connectors.

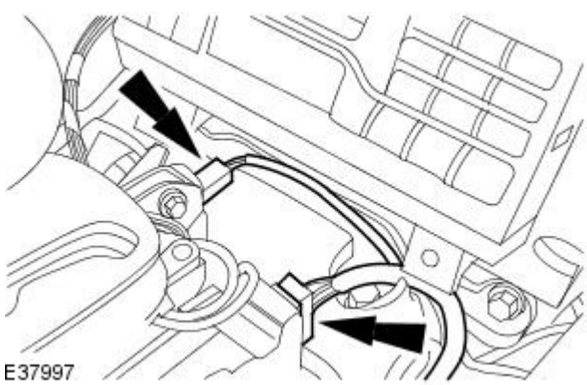

4. Connect the brake shift interlock actuator and transmission control switch electrical connectors.

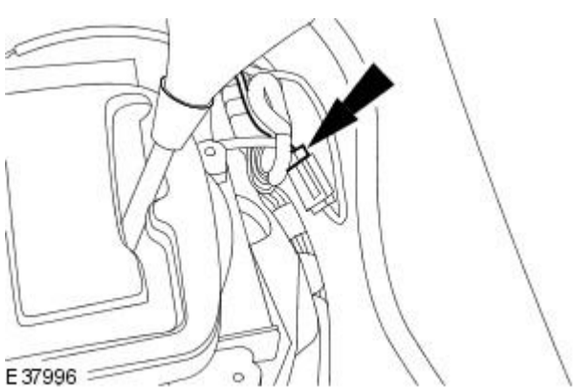

5. Connect the drive to fifth switch electrical connector.

6. NOTE: Fully extend the selector cable, then retract the selector cable one detent.

Make sure the selector lever cable is in the "R" position.

7. Make sure the transmission selector lever is in the "R" position.

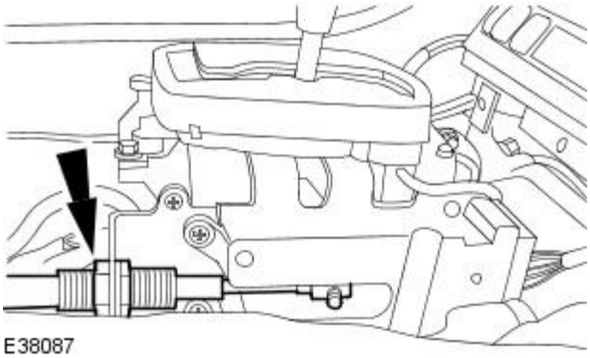

E38087

8. NOTE: Make sure the selector cable and transmission selector lever have remained in the "R" position.

Attach the selector lever cable to the transmission selector lever bracket.

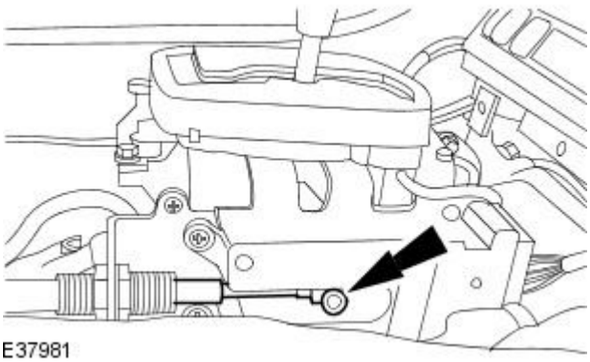

E37981

9. NOTE: Make sure the selector cable and transmission selector lever have remained in the "R" position.

Attach the selector lever cable to the transmission selector lever linkage.

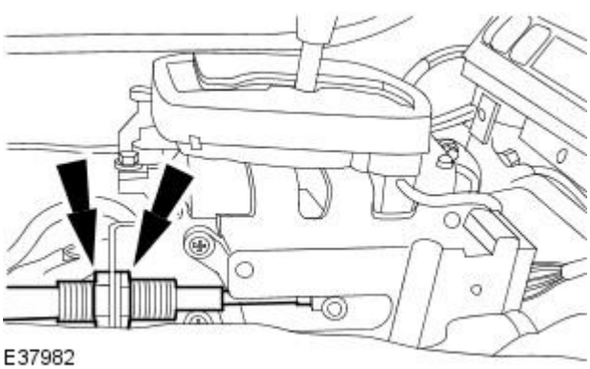

E37982

10. NOTE: Make sure the selector cable and transmission selector lever have remained in the "R" position.

Adjust the selector lever cable adjustment nuts to lock against the retaining bracket.

- Do not fully tighten the selector lever cable adjustment nuts.

11. Make sure all transmission selector lever positions select the relevant automatic transmission states.

12. NOTE: When tightening the selector lever cable adjustment nuts, make sure both adjustment nuts are tightened to the specified torque simultaneously.

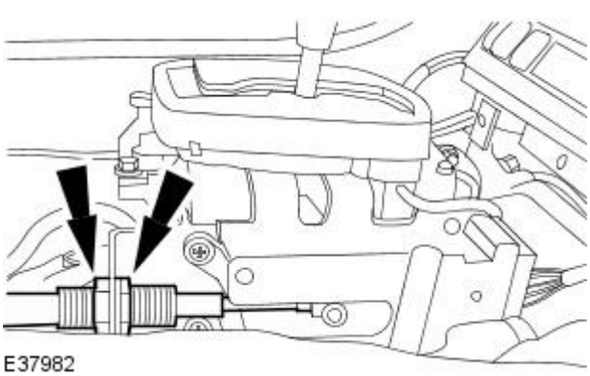

E37982

Tighten the selector lever cable adjustment nuts.

- Tighten to 20 Nm.

13. Install the floor console.
For additional information, refer to Section 501-12 Instrument Panel and Console.

Automatic Transmission / Transaxle External Controls - Selector Lever Knob

Removal and Installation

Removal

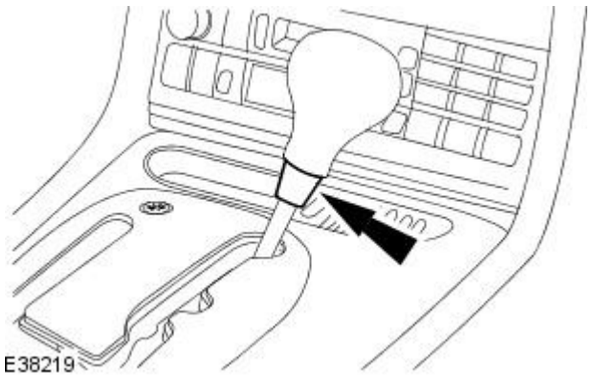

1. Using a suitable tool, loosen the transmission selector lever knob locking collar.

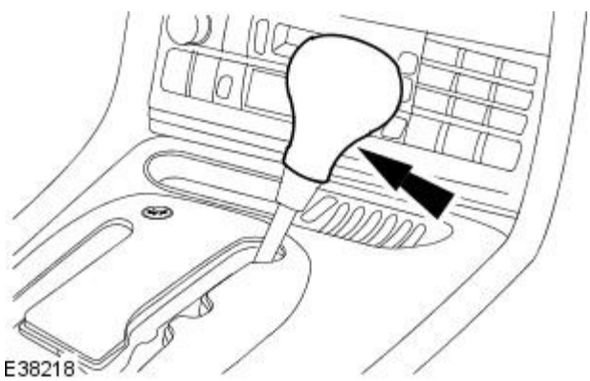

2. Remove the transmission selector lever knob.

Installation

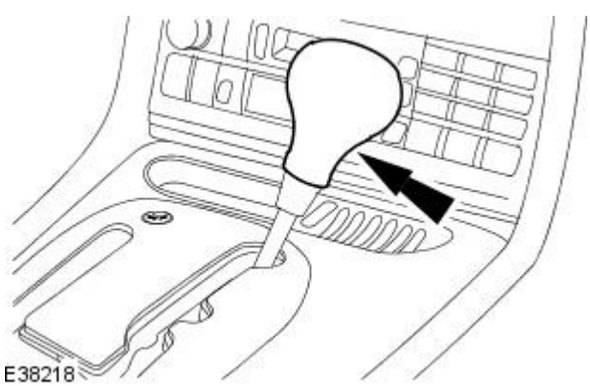

1. Install the transmission selector lever knob.

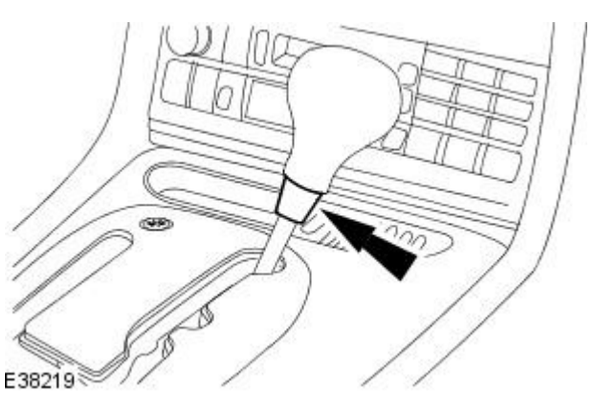

2. Using a suitable tool, tighten the transmission selector lever knob locking collar.

Automatic Transmission / Transaxle External Controls - Selector Lever Assembly

Disassembly and Assembly

Disassembly

1. Remove the transmission selector lever knob.
   For additional information, refer to Transmission Selector Lever Knob in this section.
2. Remove the transmission control switch.
   For additional information, refer to Transmission Control Switch in this section.
3. Remove the transmission selector lever knob locking collar.

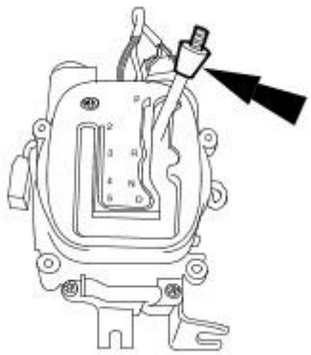

E38003

4. Remove the selector lever indicator assembly.

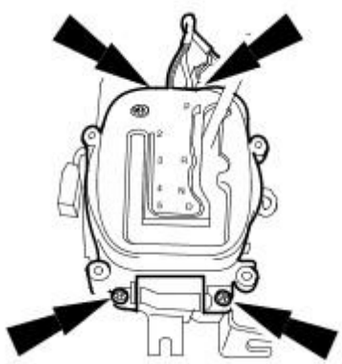

E38004

5. Detach the park position switch electrical connector.

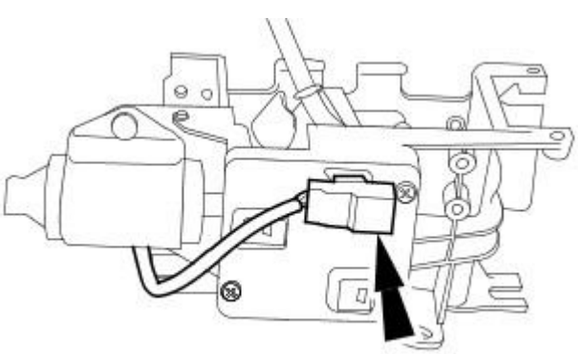

E38005

6. Remove the brake shift interlock actuator cover.

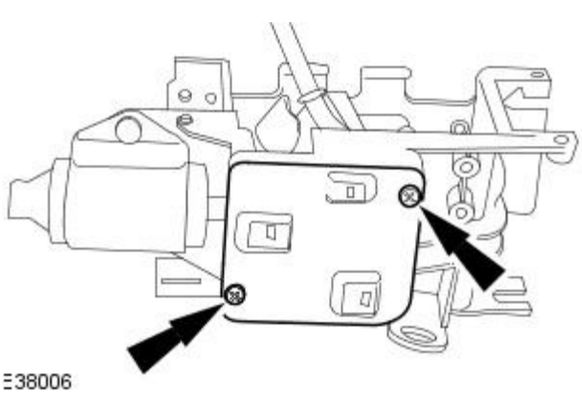

E38006

7. Remove the brake shift interlock actuator.

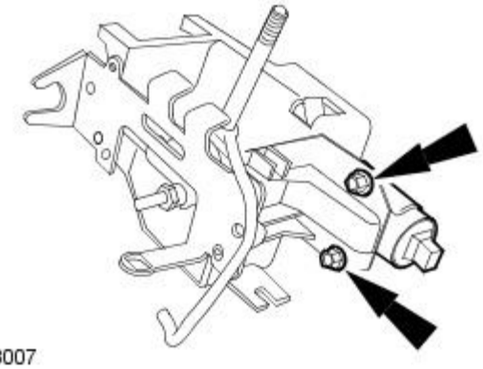

E38007

8. Remove the side plate.

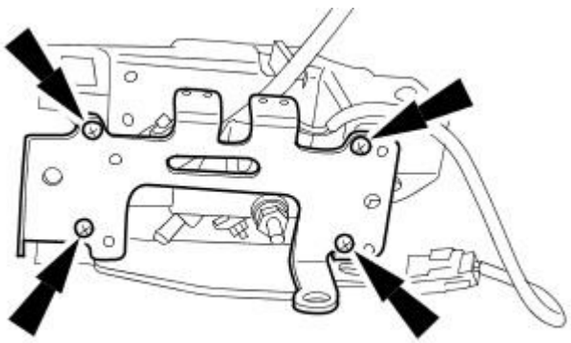

E38008

9. Remove the slide block and shaft assembly.

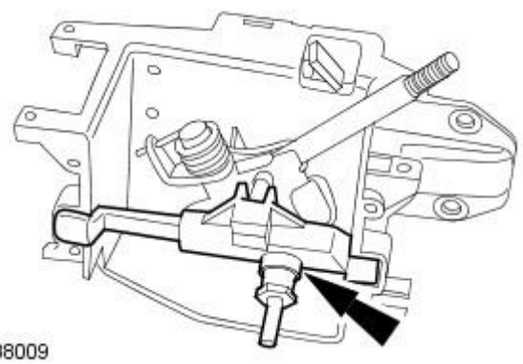

E38009

10. Remove the brake shift interlock lever.

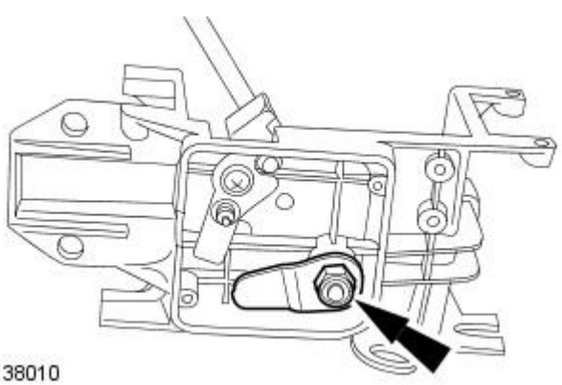

E38010

11. Remove the selector lever assembly.

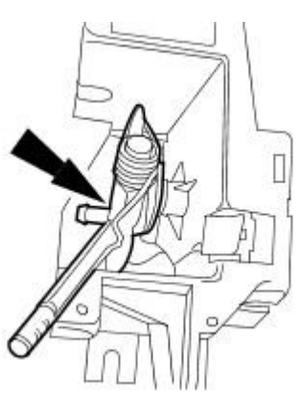

E38011

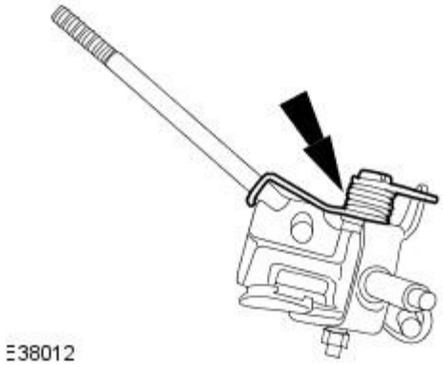

12. Remove the return spring.

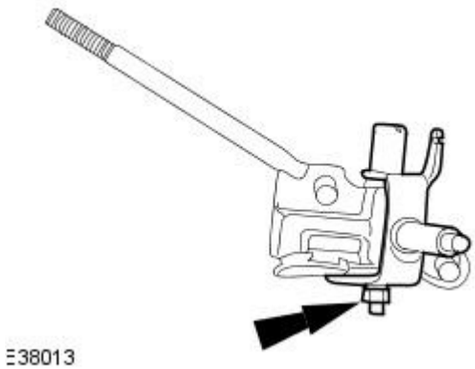

13. Remove the selector lever pivot brackets.

Assembly

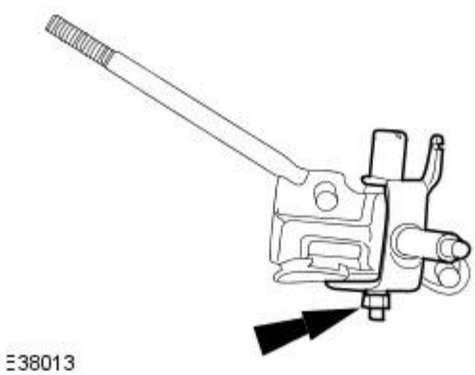

1. To install, reverse the removal procedure.

- Tighten to 10 Nm.

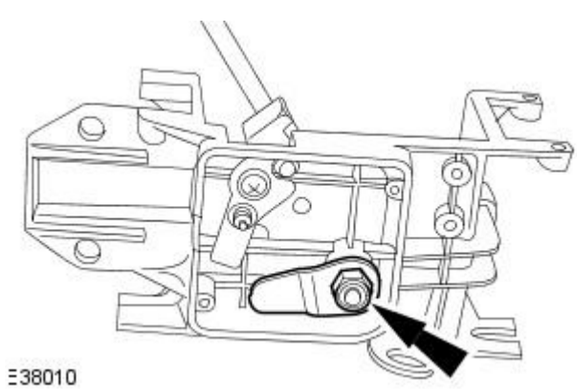

2. Tighten to 12 Nm.

3. Tighten to 5 Nm.

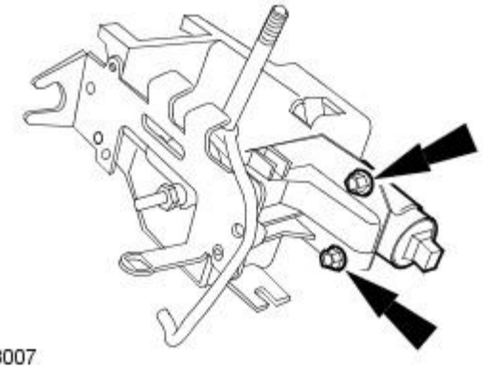

E38007

Published: 11-May-2011

Exhaust System -

Torque Specifications

Description	Nm	lb-ft	lb-in
Catalytic converter to exhaust manifold retaining nuts	20	15	-
Catalytic converter to mounting bracket retaining bolts	47	35	-
Exhaust retaining clamps	50	37	-
Catalytic converter to front muffler retaining nuts	47	35	-

Published: 11-May-2011

Exhaust System - Exhaust System

Description and Operation

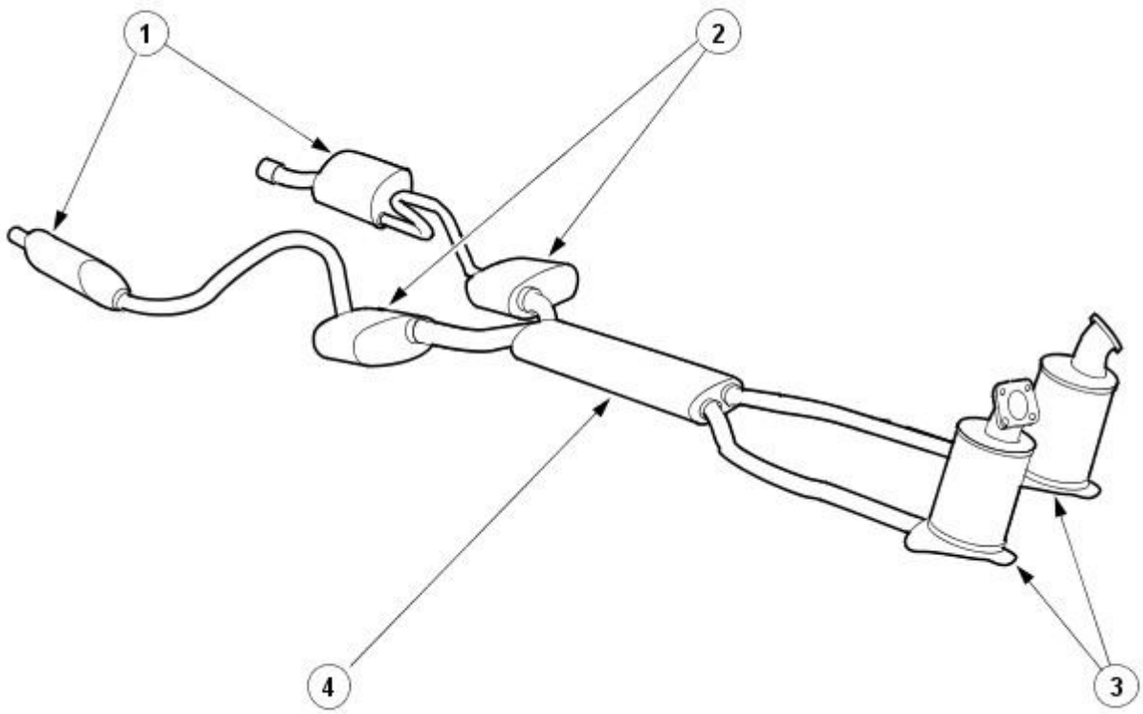

E37975

Item	Part Number	Description
1	—	Mufflers and tailpipes
2	—	Mufflers
3	—	Catalytic converters
4	—	Front muffler

Catalytic Converters

The catalytic converters consist of palladium/rhodium coated elements. These elements are utilized to control the emissions of hydrocarbons (HC), carbon monoxide (CO) and oxides of nitrogen (NOx) from the engine.

The catalytic converters are connected to the exhaust manifold by a four stud flange and use a sealing gasket to achieve an air tight seal. Exhaust jointing compound must not be applied to these joints due to the possibility of catalytic converter contamination. Avoid allowing any foreign particles of debris into the catalytic downpipe as this can result in damage to the catalytic converter.

Published: 11-May-2011

Exhaust System - Exhaust System

Diagnosis and Testing

Inspection and Verification

1. **1.** Verify the customer concern by operating the system.
2. **2.** Visually inspect for obvious signs of mechanical damage.

Visual Inspection Chart

Mechanical
Leaks
Metal fatigue
Pipes, mufflers and catalytic converters
Joints
Mountings
Clearance around components

3. **3.** If an obvious cause for an observed or reported concern is found, correct the cause (if possible) before proceeding to the next step.
4. **4.** If the concern is not visually evident, verify the symptom and refer to the Symptom Chart.

Symptom Chart

Symptom Chart

Symptom	Possible Sources	Action
Noisy or leaking exhaust	* Exhaust system/components.	* INSTALL new components as necessary.
Loss of power	* Restricted exhaust system.	* INSTALL new components as necessary.
	* Fuel system.	* CHECK and REPAIR the fuel system as necessary. REFER to Section 310-00 Fuel System - General Information.
	* Engine ignition system.	* CHECK and REPAIR the ignition system as necessary. REFER to Section 303-07 Engine Ignition.
	* Electronic engine controls system.	* CHECK and REPAIR the electronic engine controls system as necessary. REFER to Section 303-14 Electronic Engine Controls.

Exhaust System - Catalytic Converter LH

Removal and Installation

Removal

All vehicles

1. Remove the coolant expansion tank. For additional information, refer to: (303-03A Engine Cooling)

   Coolant Expansion Tank - V8 4.2L Petrol (Removal and Installation), Coolant Expansion Tank - V8 S/C 4.2L Petrol (Removal and Installation).

2. Detach the catalyst monitor sensor and heated oxygen sensor (HO2S) electrical connectors.

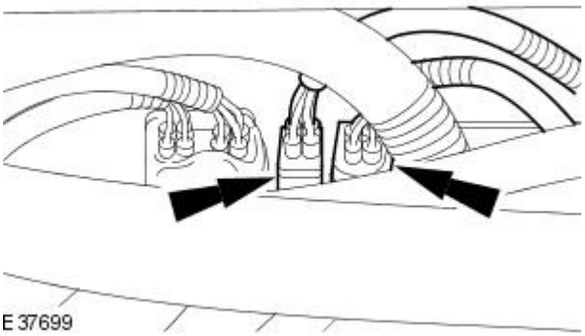

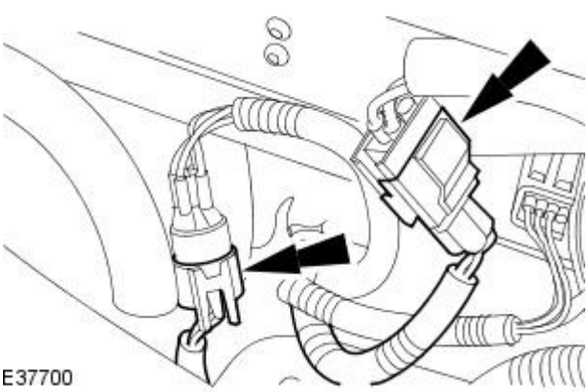

3. CAUTION: Note the position of the catalyst monitor sensor and HO2S electrical connectors to aid installation.

   Disconnect the catalyst monitor sensor and HO2S electrical connectors.

Vehicles with supercharger

4. Remove the catalytic converter heat shield.

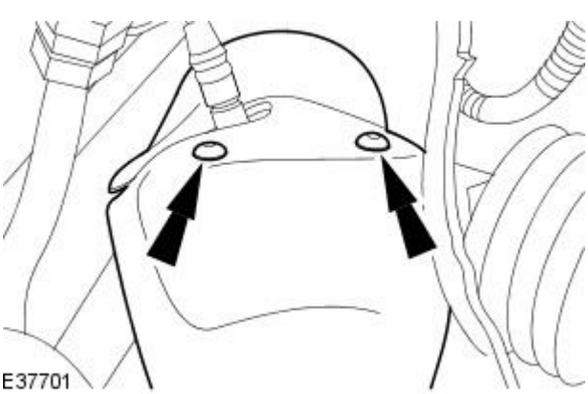

All vehicles

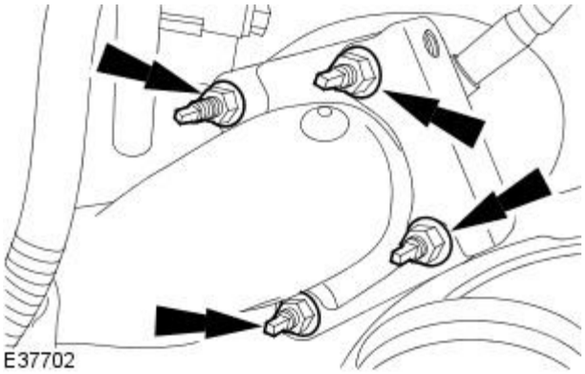

5. Remove the catalytic converter retaining nuts.

Vehicles with supercharger

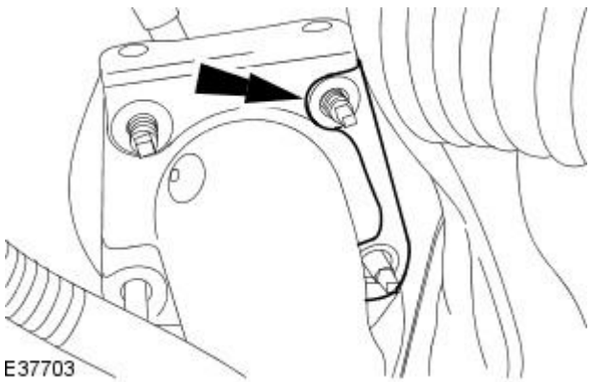

6. Detach the lower steering column heat shield.

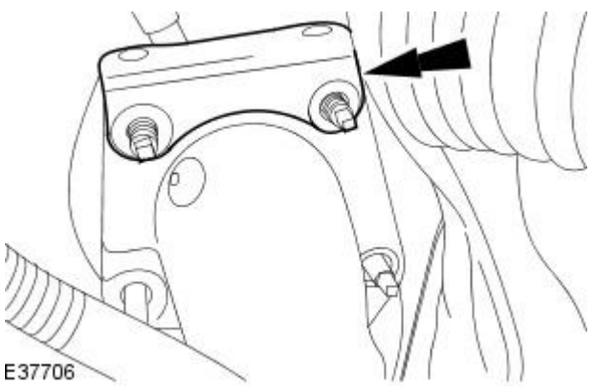

7. Remove the catalytic converter heat shield mounting bracket.

All vehicles

8. Remove the front muffler.
For additional information, refer to: Front Muffler (309-00 Exhaust System, Removal and Installation).

9. Remove the catalytic converter.

- Remove and discard the gasket.

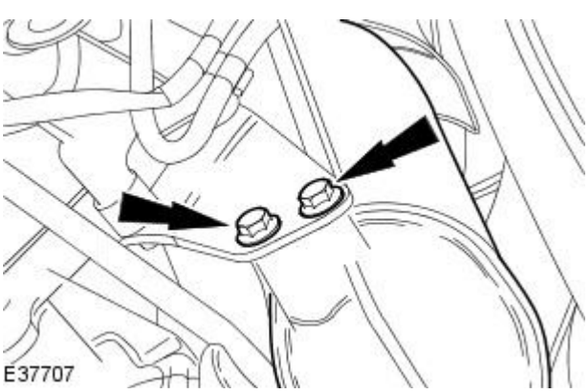

Installation

All vehicles

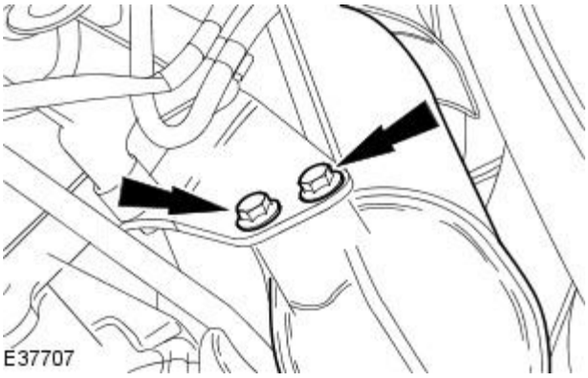

1. NOTE: Install a new gasket.

Loosely install the catalytic converter.

2. Lower the vehicle.

Vehicles with supercharger

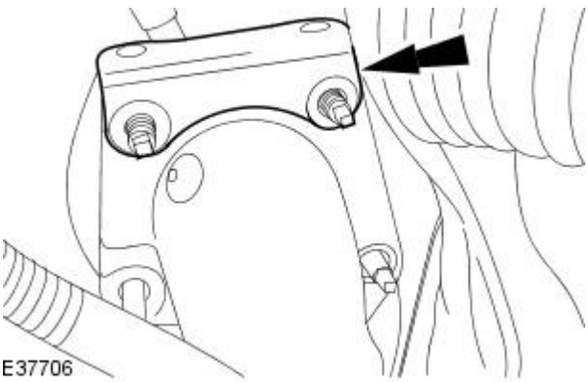

3. Install the catalytic converter heat shield mounting bracket.

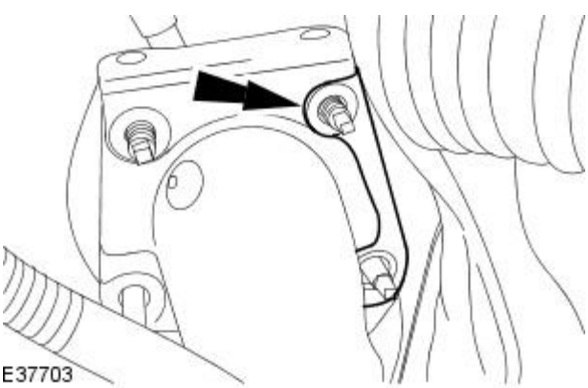

4. Attach the lower steering column heat shield.

All vehicles

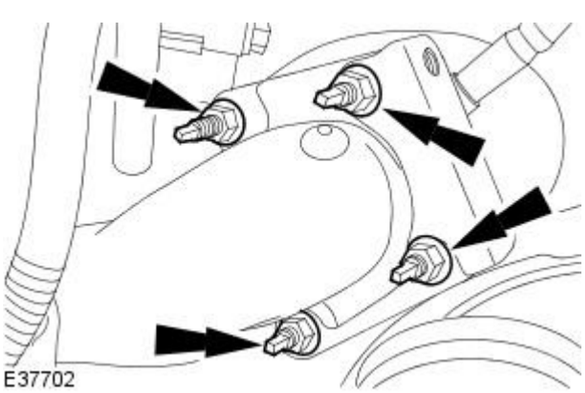

5. Install the catalytic converter retaining nuts.

- Tighten to 20 Nm.

Vehicles with supercharger

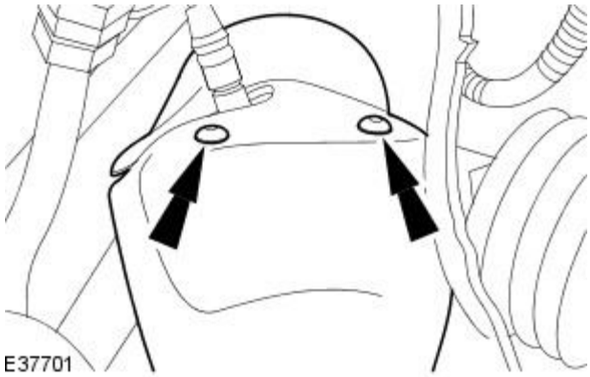

6. Install the catalytic converter heat shield.

All vehicles

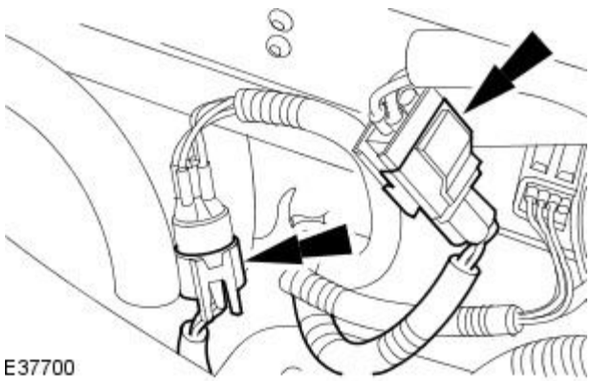

7. CAUTION: Note the position of the catalyst monitor sensor and HO2S electrical connectors.

Connect the catalyst monitor sensor and HO2S electrical connectors.

8. Attach the catalyst monitor sensor and HO2S electrical connectors.

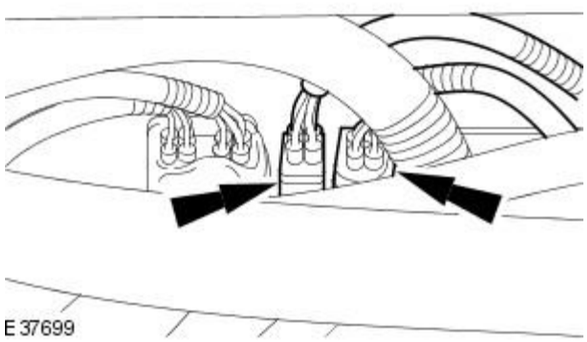

9. Install the coolant expansion tank. For additional information, refer to: (303-03A Engine Cooling)

Coolant Expansion Tank - V8 4.2L Petrol (Removal and Installation), Coolant Expansion Tank - V8 S/C 4.2L Petrol (Removal and Installation).

10. Raise the vehicle.

11. Tighten to 47 Nm.

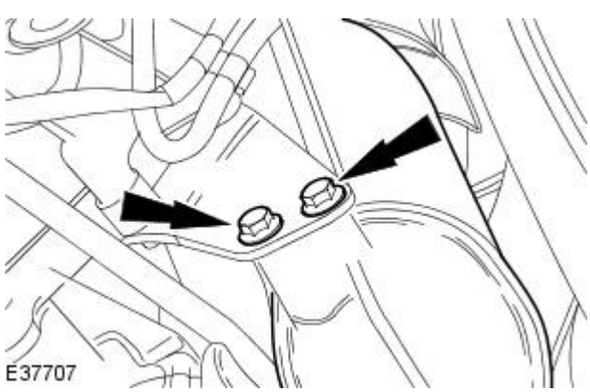

12. Install the front muffler.
For additional information, refer to: Front Muffler (309-00 Exhaust System, Removal and Installation).

13. NOTE: For NAS vehicles only.

If required, carry out a long drive cycle.
For additional information, refer to: Powertrain Control Module (PCM)

Long Drive Cycle Self-Test (303-14 Electronic Engine Controls, General Procedures).

Exhaust System - Catalytic Converter RH

Removal and Installation

Removal

All vehicles

1. Remove the air cleaner outlet pipe.
   For additional information, refer to: Air Cleaner Outlet Pipe (303-12 Intake Air Distribution and Filtering, Removal and Installation).
2. Detach the catalyst monitor sensor and heated oxygen sensor (HO2S) electrical connectors.

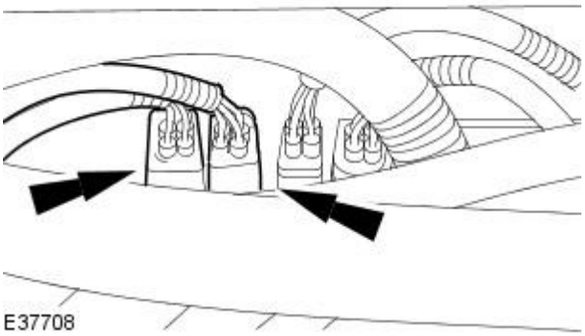

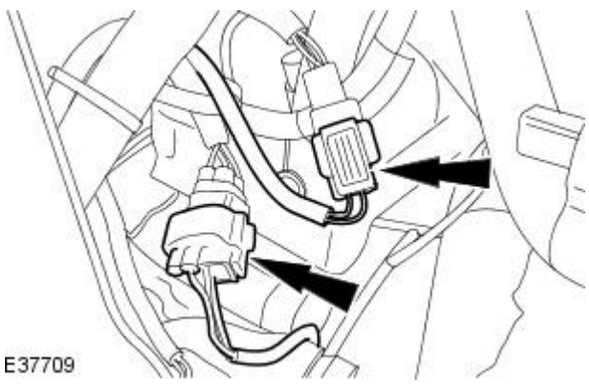

3. CAUTION: Note the position of the catalyst monitor sensor and HO2S electrical connectors to aid installation.

   Disconnect the catalyst monitor sensor and HO2S electrical connectors.

Vehicles with supercharger

4. Remove the catalytic converter heat shield.

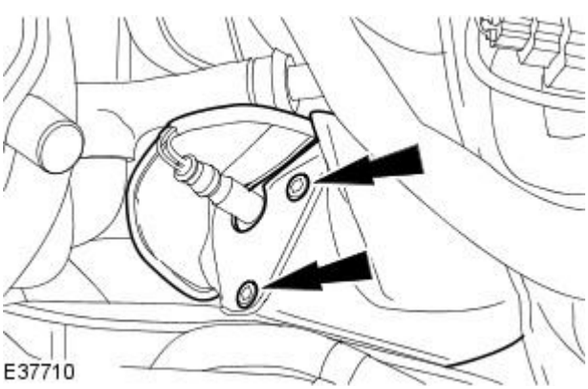

All vehicles

5. Remove the catalytic converter retaining nuts.

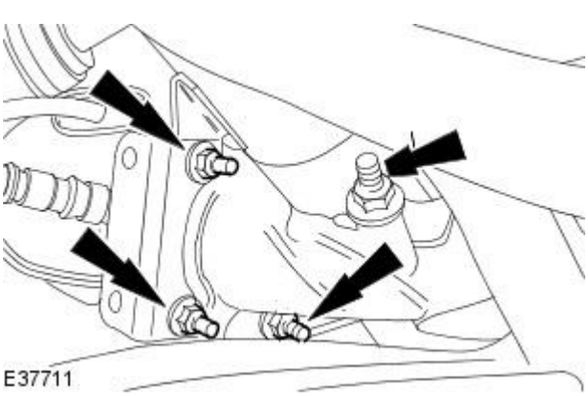

Vehicles with supercharger

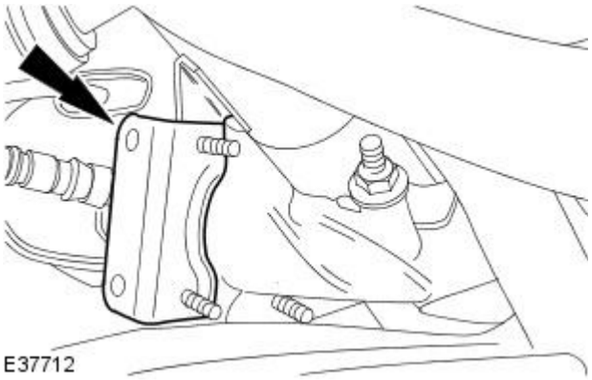

6. Remove the catalytic converter heat shield mounting bracket.

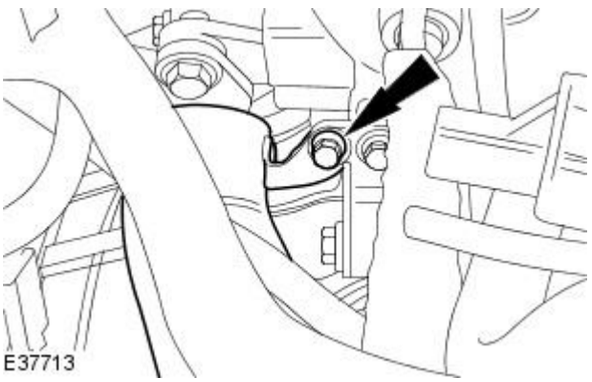

7. Remove the exhaust manifold to exhaust gas recirculation (EGR) valve tube heat shield.

All vehicles

8. Remove the front muffler.
For additional information, refer to: Front Muffler (309-00 Exhaust System, Removal and Installation).

9. Remove the catalytic converter.

- Remove and discard the gasket.

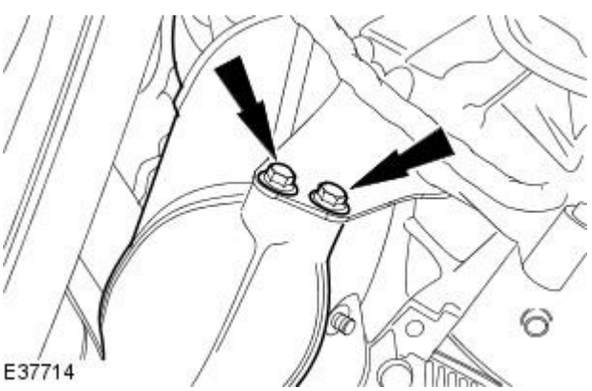

Installation

All vehicles

1. NOTE: Install a new gasket.

Loosely install the catalytic converter.

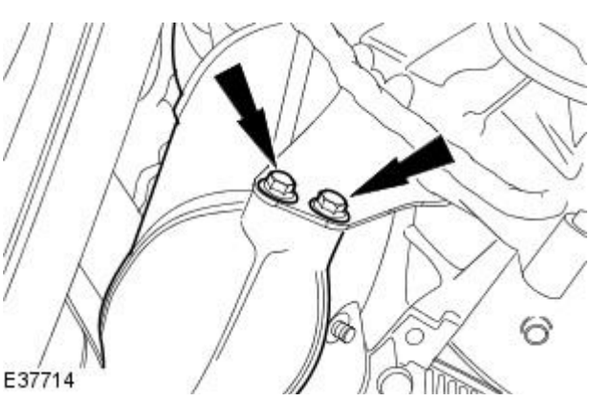

2. Lower the vehicle.

Vehicles with supercharger

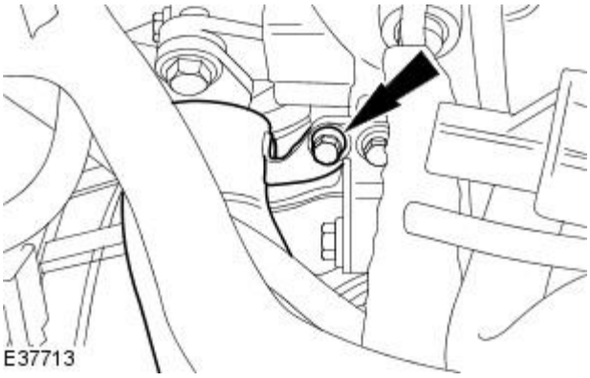

3. Install the exhaust manifold to EGR valve tube heat shield.

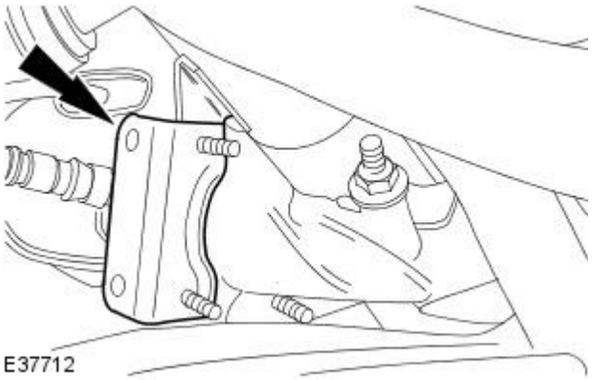

4. Install the catalytic converter heat shield mounting bracket.

All vehicles

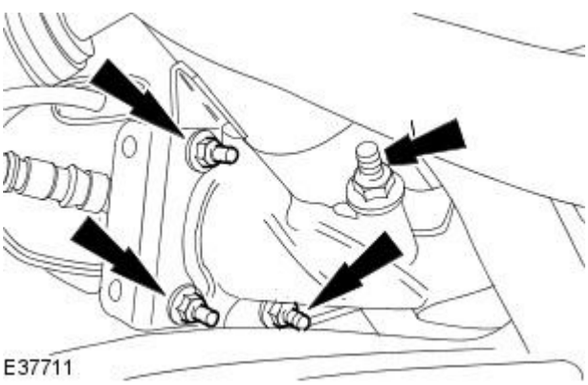

5. Install the catalytic converter retaining nuts.

- Tighten to 20 Nm.

Vehicles with supercharger

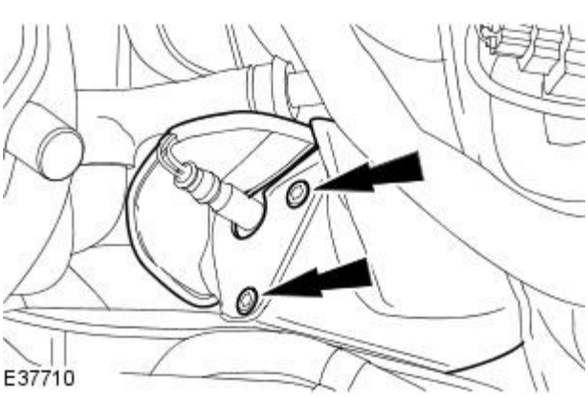

6. Install the catalytic converter heat shield.

All vehicles

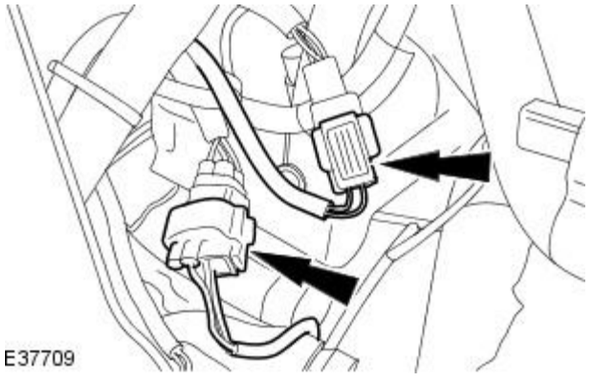

7. CAUTION: Note the position of the catalyst monitor sensor and HO2S electrical connectors.

Connect the catalyst monitor sensor and HO2S electrical connectors.

8. Attach the catalyst monitor sensor and HO2S electrical connectors.

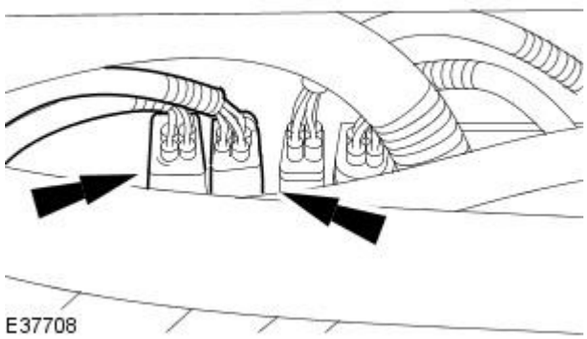

9. Install the air cleaner outlet pipe.
For additional information, refer to: Air Cleaner Outlet Pipe (303-12 Intake Air Distribution and Filtering, Removal and Installation).

10. Raise the vehicle.

11. Tighten to 47 Nm.

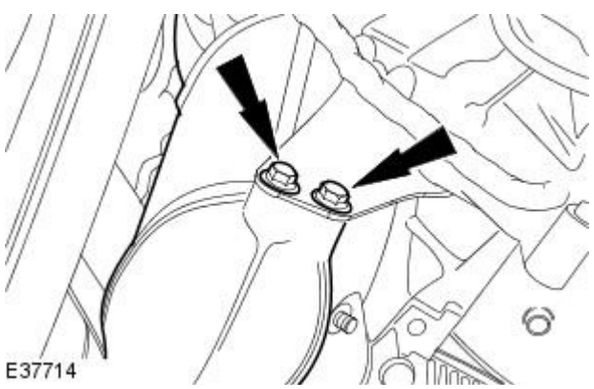

12. Install the front muffler.
For additional information, refer to: Front Muffler (309-00 Exhaust System, Removal and Installation).

13. NOTE: For NAS vehicles only.

If required, carry out a long drive cycle.
For additional information, refer to: Powertrain Control Module (PCM) Long Drive Cycle Self-Test (303-14 Electronic Engine Controls, General Procedures).

Exhaust System - Front Muffler

Removal and Installation

Removal

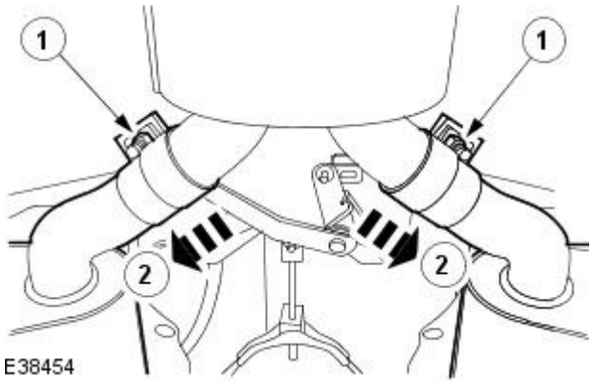

1. Raise and support the vehicle.
For additional information, refer to Section 100-02 Jacking and Lifting.

2. Detach the mufflers.

1. Loosen the muffler retaining clamps.
2. Detach the muffler.

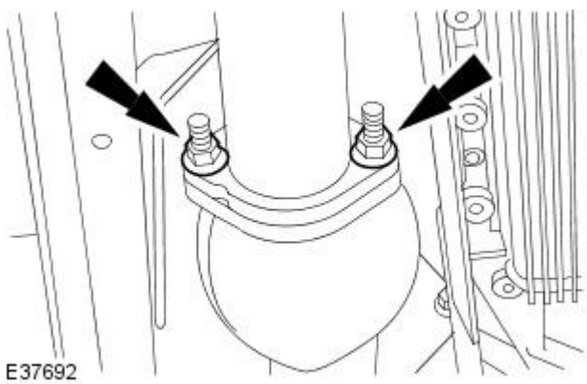

3. NOTE: Left-hand shown, right-hand similar.

Remove the front muffler retaining nuts.

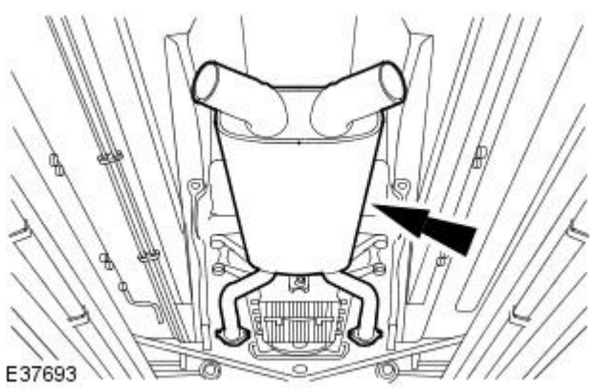

4. Remove the front muffler.

- Remove and discard the sealing gaskets.

Installation

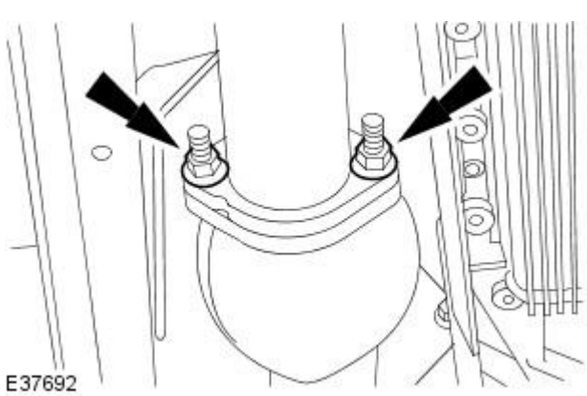

1. NOTE: Install new gaskets.

To install, reverse the removal procedure.

- Tighten to 47 Nm.

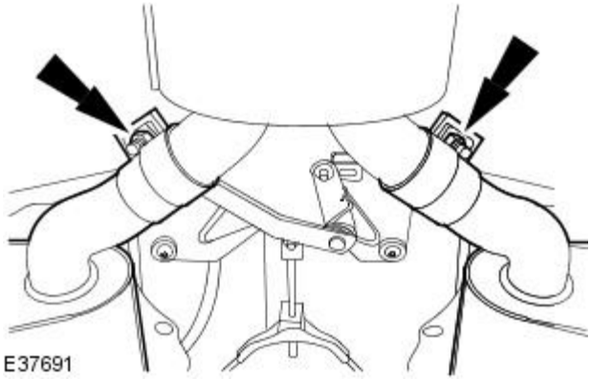

2. Tighten to 50 Nm.

Exhaust System - Muffler

Removal and Installation

Removal

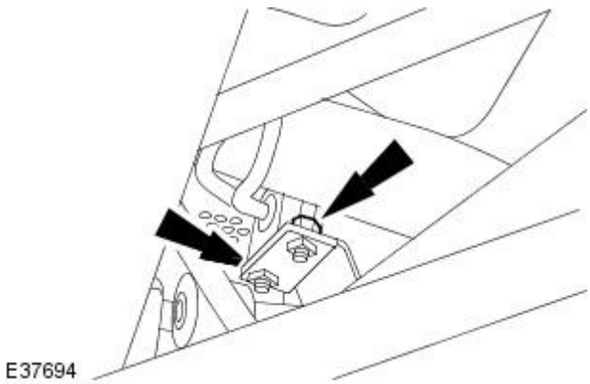

1. Remove the muffler and tailpipe.
   For additional information, refer to Muffler and Tailpipe in this section.
2. Detach the muffler hanger insulator.

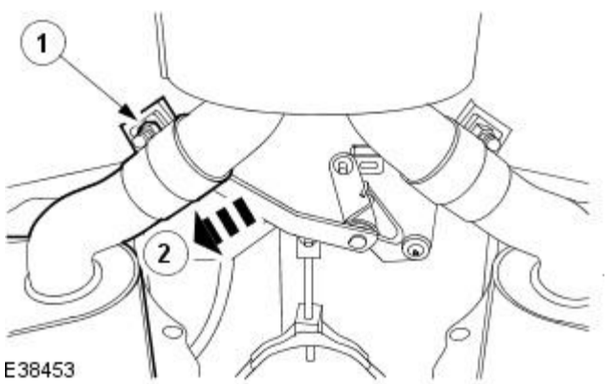

3. Detach the muffler.
   1. Loosen the muffler retaining clamp.
   2. Detach the muffler.

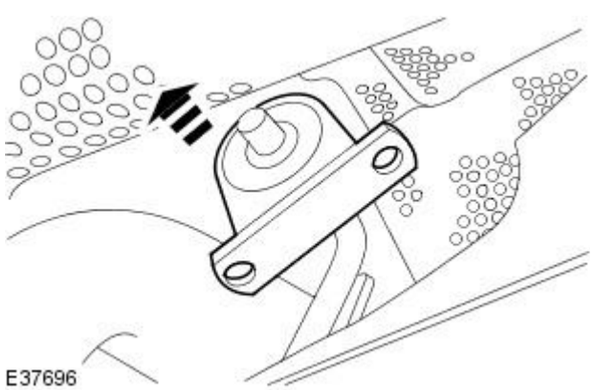

4. Remove the muffler hanger insulator.

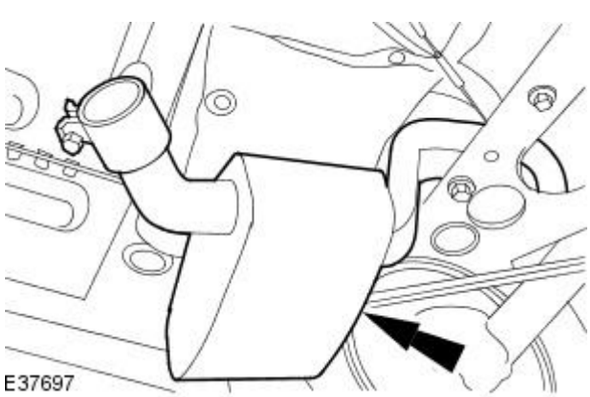

5. Remove the muffler.

Installation

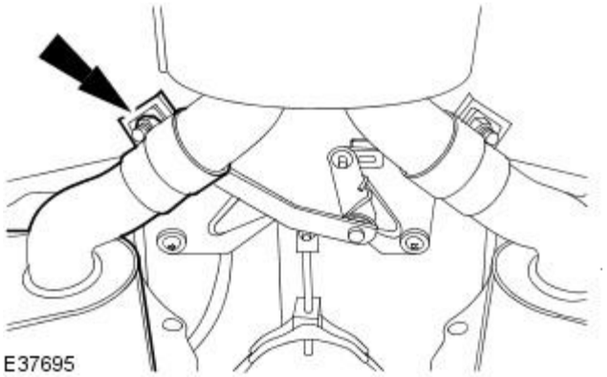

1. To install, reverse the removal procedure.

- Tighten to 50 Nm.

Exhaust System - Muffler and Tailpipe

Removal and Installation

Removal

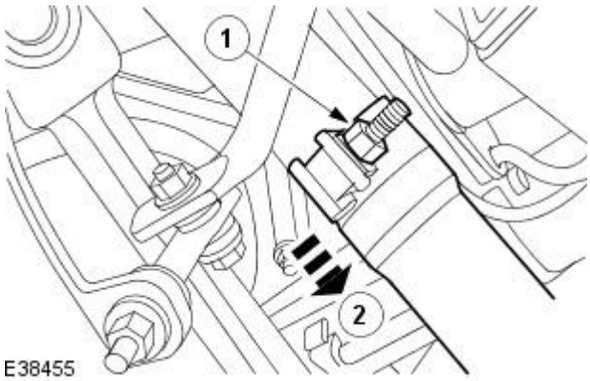

1. Raise and support the vehicle.
For additional information, refer to Section 100-02 Jacking and Lifting.

2. Detach the muffler and tailpipe.

1. Loosen the muffler and tailpipe retaining clamp.
2. Detach the muffler and tailpipe.

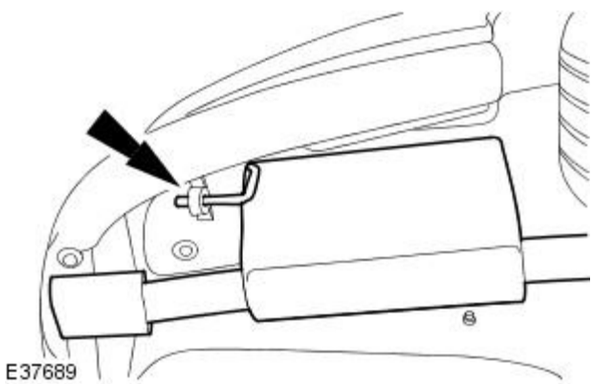

3. Remove the muffler and tailpipe.

Installation

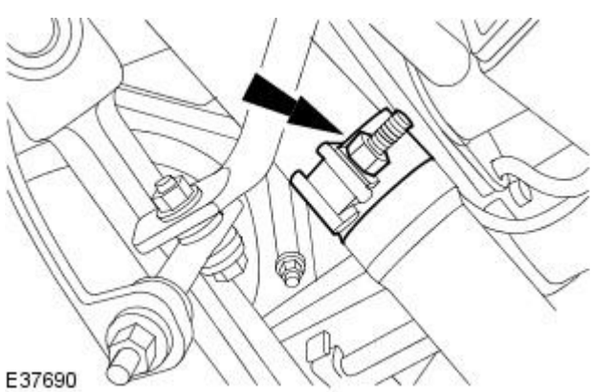

1. To install, reverse the removal procedure.

- Tighten to 50 Nm.

Published: 11-May-2011

Fuel System - General Information -

General Specifications

Item	Specification
Fuel tank capacity	75 liters

Item	Specification
Fuel system pressure - vehicles with supercharger	5.0 bar
Fuel system pressure - vehicles without supercharger	3.8 bar

Fuel System - General Information - Fuel System Pressure Release

General Procedures

Special Tool(s)	
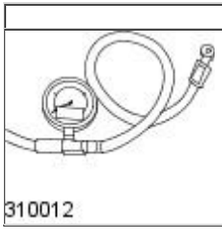 310012	Fuel Pressure Gauge 310-012

All vehicles

• WARNINGS:

Place the vehicle in a quarantined area and arrange "No Smoking/Petrol Fumes" signs about the vehicle.

Before any work is carried out on the fuel system, ground the vehicle to earth and maintain the ground connection until the work is complete.

Do not smoke or carry lighted tobacco or open flame of any type when working on or near any fuel related components. Highly flammable vapors are always present and may ignite. Failure to follow these instructions may result in personal injury.

The fuel system remains pressurized for a long time after the ignition is switched off. The fuel pressure must be relieved before attempting any repairs. Failure to follow these instructions may result in personal injury.

After carrying out repairs, the fuel system must be checked visually for leaks. Failure to follow these instructions may result in personal injury.

This procedure involves fuel handling. Be prepared for fuel spillage at all times and always observe fuel handling precautions. Failure to follow these instructions may result in personal injury.

If taken internally do not induce vomiting, seek immediate medical attention. Failure to follow these instructions may result in personal injury.

If fuel contacts the eyes, flush the eyes with cold water or eyewash solution and seek medical attention.

Wash hands thoroughly after handling, as prolonged contact may cause irritation. Should irritation develop, seek medical attention.

Do not carry or operate cellular phones when working on or near any fuel related components. Highly flammable vapours are always present and may ignite. Failure to follow these instructions may result in personal injury.

1. Disconnect the battery ground cable.
   For additional information, refer to Section 414-01 Battery, Mounting and Cables.

Vehicles without supercharger

2. Remove the oil filler cap.

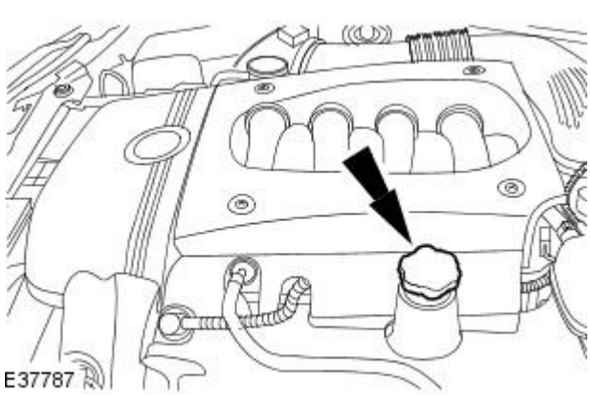

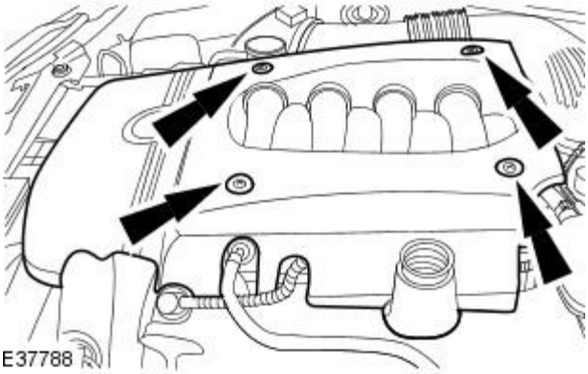

3. Remove the engine cover.

All vehicles

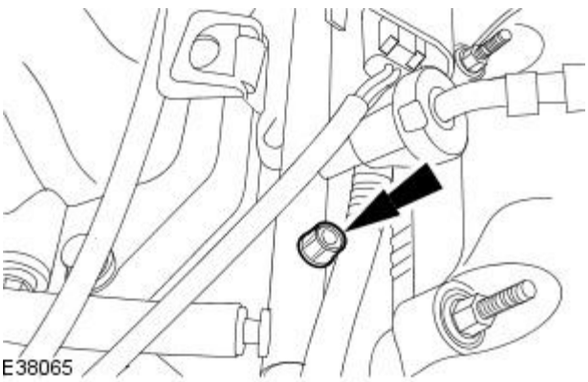

4. Remove the fuel system pressure release valve cap.

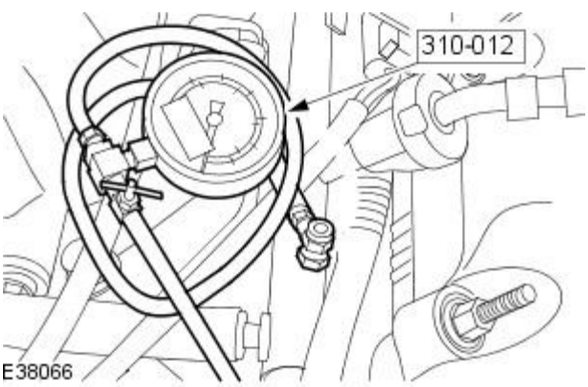

5. WARNING: Make sure the tap of the special tool is rotated fully clockwise before installing the special tool to the fuel system pressure release valve. Failure to follow these instructions may result in personal injury.

Install the special tool to the fuel system pressure relief valve.

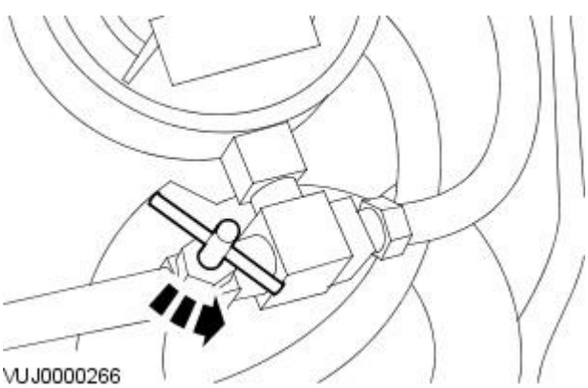

6. NOTE: When releasing the fuel system pressure, catch any displaced fuel in a suitable container.

Release the fuel system pressure.

- Rotate the tap of the special tool fully counterclockwise.

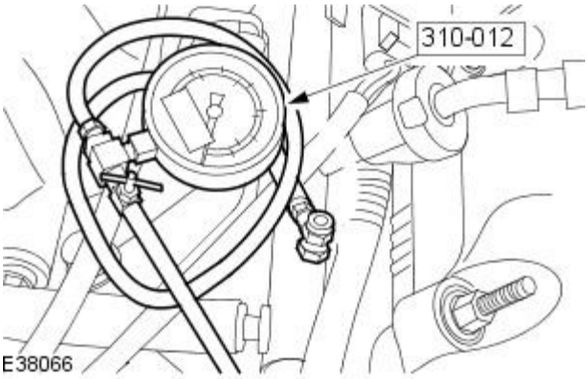

7. Remove the special tool from the fuel system pressure release valve.

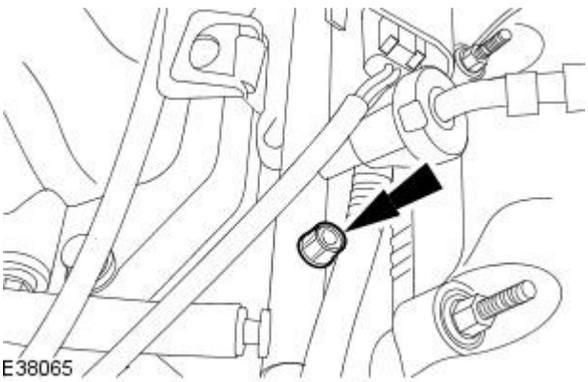

8. Install the fuel system pressure relief valve cap.

Vehicles without supercharger

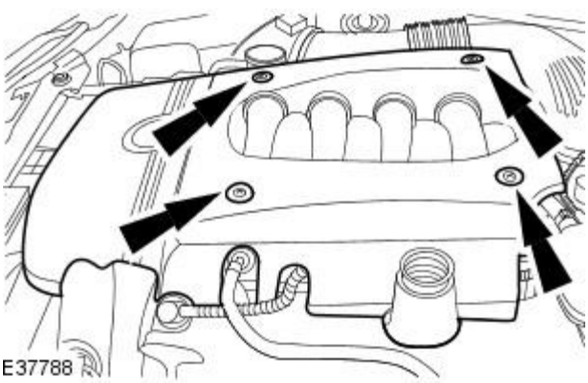

9. Install the engine cover.

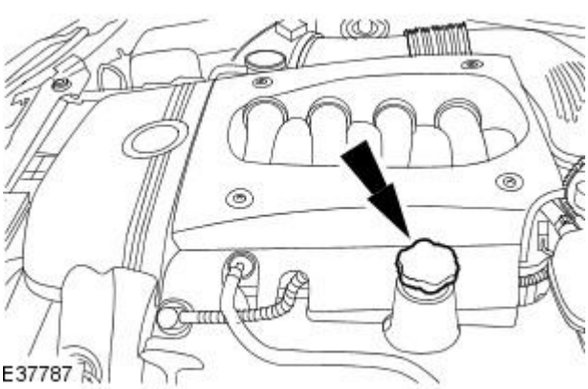

10. Install the oil filler cap.

All vehicles

11. Connect the battery ground cable.
For additional information, refer to Section 414-01 Battery, Mounting and Cables.

Published: 11-May-2011

Fuel System - General Information - Fuel Tank DrainingVehicles Without: On-Board Refueling Vapor Recovery (ORVR)

General Procedures

• WARNINGS:

Place the vehicle in a quarantined area and arrange "No Smoking/Petrol Fumes" signs about the vehicle.

Before any work is carried out on the fuel system, ground the vehicle to earth and maintain the ground connection until the work is complete.

Do not smoke or carry lighted tobacco or open flame of any type when working on or near any fuel related components. Highly flammable vapors are always present and may ignite. Failure to follow these instructions may result in personal injury.

The fuel system remains pressurized for a long time after the ignition is switched off. The fuel pressure must be relieved before attempting any repairs. Failure to follow these instructions may result in personal injury.

After carrying out repairs, the fuel system must be checked visually for leaks. Failure to follow these instructions may result in personal injury.

This procedure involves fuel handling. Be prepared for fuel spillage at all times and always observe fuel handling precautions. Failure to follow these instructions may result in personal injury.

If taken internally do not induce vomiting, seek immediate medical attention. Failure to follow these instructions may result in personal injury.

If fuel contacts the eyes, flush the eyes with cold water or eyewash solution and seek medical attention.

Wash hands thoroughly after handling, as prolonged contact may cause irritation. Should irritation develop, seek medical attention.

Do not carry or operate cellular phones when working on or near any fuel related components. Highly flammable vapors are always present and may ignite. Failure to follow these instructions may result in personal injury.

1. Open the fuel tank filler pipe flap.
2. Detach the fuel tank filler pipe cap.
3. Using suitable fuel tank draining equipment, drain the fuel from the fuel tank. Follow the manufactures operating instructions.

Published: 11-May-2011

Fuel System - General Information - Fuel Tank DrainingVehicles With: On-Board Refueling Vapor Recovery (ORVR)

General Procedures

• WARNINGS:

Place the vehicle in a quarantined area and arrange "No Smoking/Petrol Fumes" signs about the vehicle.

Before any work is carried out on the fuel system, ground the vehicle to earth and maintain the ground connection until the work is complete.

Do not smoke or carry lighted tobacco or open flame of any type when working on or near any fuel related components. Highly flammable vapors are always present and may ignite. Failure to follow these instructions may result in personal injury.

The fuel system remains pressurized for a long time after the ignition is switched off. The fuel pressure must be relieved before attempting any repairs. Failure to follow these instructions may result in personal injury.

After carrying out repairs, the fuel system must be checked visually for leaks. Failure to follow these instructions may result in personal injury.

This procedure involves fuel handling. Be prepared for fuel spillage at all times and always observe fuel handling precautions. Failure to follow these instructions may result in personal injury.

If taken internally do not induce vomiting, seek immediate medical attention. Failure to follow these instructions may result in personal injury.

If fuel contacts the eyes, flush the eyes with cold water or eyewash solution and seek medical attention.

Wash hands thoroughly after handling, as prolonged contact may cause irritation. Should irritation develop, seek medical attention.

Do not carry or operate cellular phones when working on or near any fuel related components. Highly flammable vapors are always present and may ignite. Failure to follow these instructions may result in personal injury.

1. Disconnect the fuel injection supply manifold fuel line.
   For additional information, refer to Spring Lock Couplings - in this section.
2. Using suitable pneumatic fuel tank draining equipment, drain the fuel from the fuel tank through the fuel injection supply manifold fuel line. Follow the manufactures operating instructions.

Published: 11-May-2011

Fuel System - General Information - Quick Release Coupling - Type A / Type B

General Procedures

Quick Release Coupling Type A / Type B Disconnect

• WARNINGS:

Place the vehicle in a quarantined area and arrange "No Smoking/Petrol Fumes" signs about the vehicle.

Before any work is carried out on the fuel system, ground the vehicle to earth and maintain the ground connection until the work is complete.

Do not smoke or carry lighted tobacco or open flame of any type when working on or near any fuel related components. Highly flammable vapors are always present and may ignite. Failure to follow these instructions may result in personal injury.

The fuel system remains pressurized for a long time after the ignition is switched off. The fuel pressure must be relieved before attempting any repairs. Failure to follow these instructions may result in personal injury.

After carrying out repairs, the fuel system must be checked visually for leaks. Failure to follow these instructions may result in personal injury.

This procedure involves fuel handling. Be prepared for fuel spillage at all times and always observe fuel handling precautions. Failure to follow these instructions may result in personal injury.

If taken internally do not induce vomiting, seek immediate medical attention. Failure to follow these instructions may result in personal injury.

If fuel contacts the eyes, flush the eyes with cold water or eyewash solution and seek medical attention.

Wash hands thoroughly after handling, as prolonged contact may cause irritation. Should irritation develop, seek medical attention.

Do not carry or operate cellular phones when working on or near any fuel related components. Highly flammable vapours are always present and may ignite. Failure to follow these instructions may result in personal injury.

1. Release the fuel system pressure.
For additional information, refer to Fuel System Pressure Release - in this section.

Quick Release Coupling Type A Disconnect

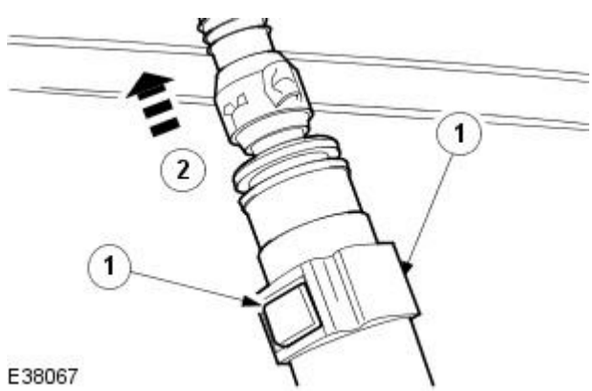

2. Disconnect the quick release coupling.

1. Press the tangs.
2. Disconnect the quick release coupling.

Quick Release Coupling Type B Disconnect

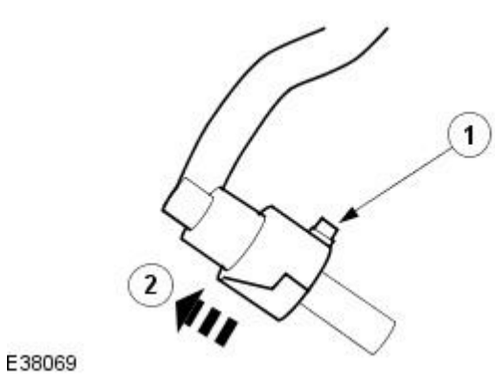

3. Disconnect the quick release coupling.

1. Press the tangs.
2. Disconnect the quick release coupling.

Quick Release Coupling Type A Connect

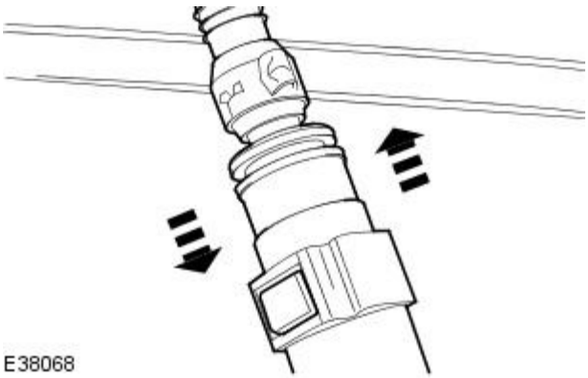

4. Connect the quick release coupling.
5. Check the quick release coupling to make sure it is correctly installed by pulling on the lines.

Quick Release Coupling Type B Connect

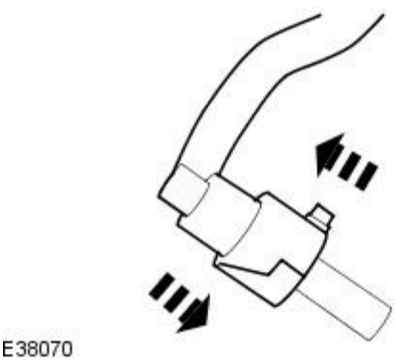

6. Connect the quick release coupling.
7. Check the quick release coupling to make sure it is correctly installed by pulling on the lines.

Published: 11-May-2011

Fuel System - General Information - Spring Lock Couplings

General Procedures

Special Tool(s)	
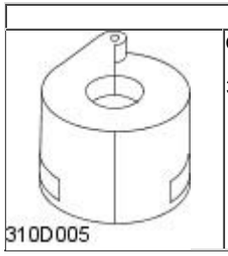 310D005	Quick Release Coupling Tool or Equivalent 310-D005

Disconnect

• WARNINGS:

Place the vehicle in a quarantined area and arrange "No Smoking/Petrol Fumes" signs about the vehicle.

Before any work is carried out on the fuel system, ground the vehicle to earth and maintain the ground connection until the work is complete.

Do not smoke or carry lighted tobacco or open flame of any type when working on or near any fuel related components. Highly flammable vapors are always present and may ignite. Failure to follow these instructions may result in personal injury.

The fuel system remains pressurized for a long time after the ignition is switched off. The fuel pressure must be relieved before attempting any repairs. Failure to follow these instructions may result in personal injury.

After carrying out repairs, the fuel system must be checked visually for leaks. Failure to follow these instructions may result in personal injury.

This procedure involves fuel handling. Be prepared for fuel spillage at all times and always observe fuel handling precautions. Failure to follow these instructions may result in personal injury.

If taken internally do not induce vomiting, seek immediate medical attention. Failure to follow these instructions may result in personal injury.

If fuel contacts the eyes, flush the eyes with cold water or eyewash solution and seek medical attention.

Wash hands thoroughly after handling, as prolonged contact may cause irritation. Should irritation develop, seek medical attention.

Do not carry or operate cellular phones when working on or near any fuel related components. Highly flammable vapors are always present and may ignite. Failure to follow these instructions may result in personal injury.

1. Release the fuel system pressure.
   For additional information, refer to Fuel System Pressure Release - in this section.
2. Remove the safety clip from the quick release coupling.

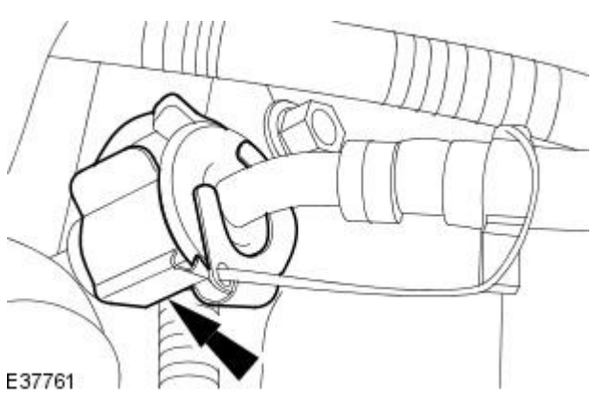

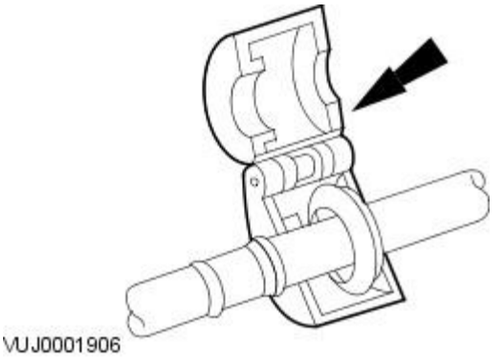

VUJ0001906

3. Install the special tool.

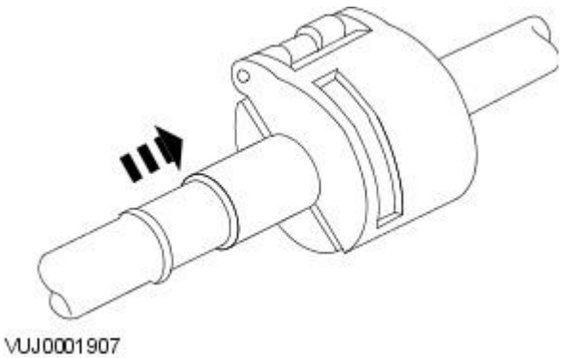

VUJ0001907

4. Close the special tool and push it into the female end of the quick release coupling.

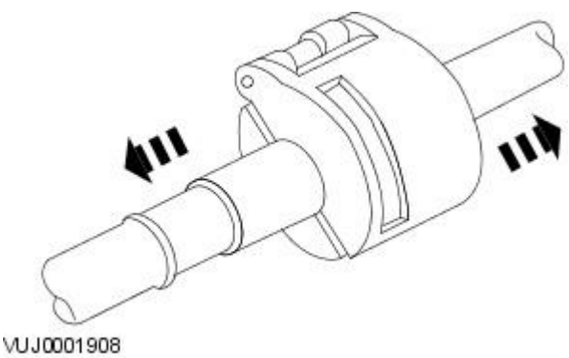

VUJ0001908

5. Disconnect the quick release coupling.

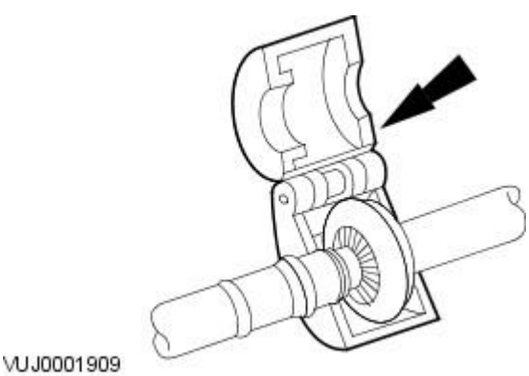

VUJ0001909

6. Remove the special tool.

Connect

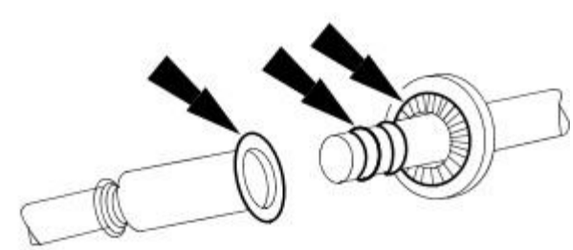

VUJ0001910

1. NOTE: Install new O-ring seals.

- NOTE: Install a new garter spring.

Clean and inspect the male and female ends of the quick release coupling.

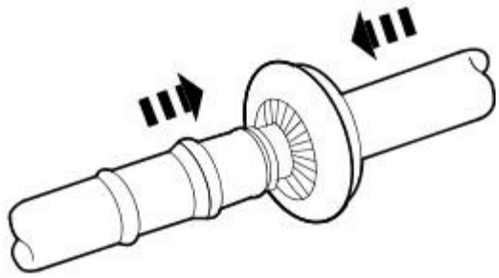

E31439

2. WARNING: Make sure the garter spring snaps over the male end of the quick release coupling.

Connect the quick release coupling.

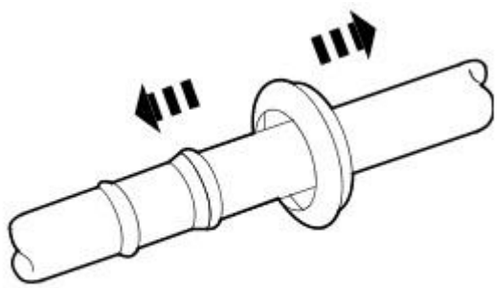

E31440

3. Check the quick release coupling to make sure it is correctly connected by pulling on the lines.

Published: 11-May-2011

Fuel Tank and Lines -

Torque Specifications

Description	Nm	lb-ft	lb-in
Fuel tank support strap retaining bolts	25	18	-
Fuel tank access panel retaining bolts	5	-	44
Fuel filter bracket retaining nut	4	-	35
Fuel filter retaining nut	4	-	35
Fuel pump driver module retaining nuts	8	-	71

Fuel Tank and Lines - Fuel Tank and Lines

Description and Operation

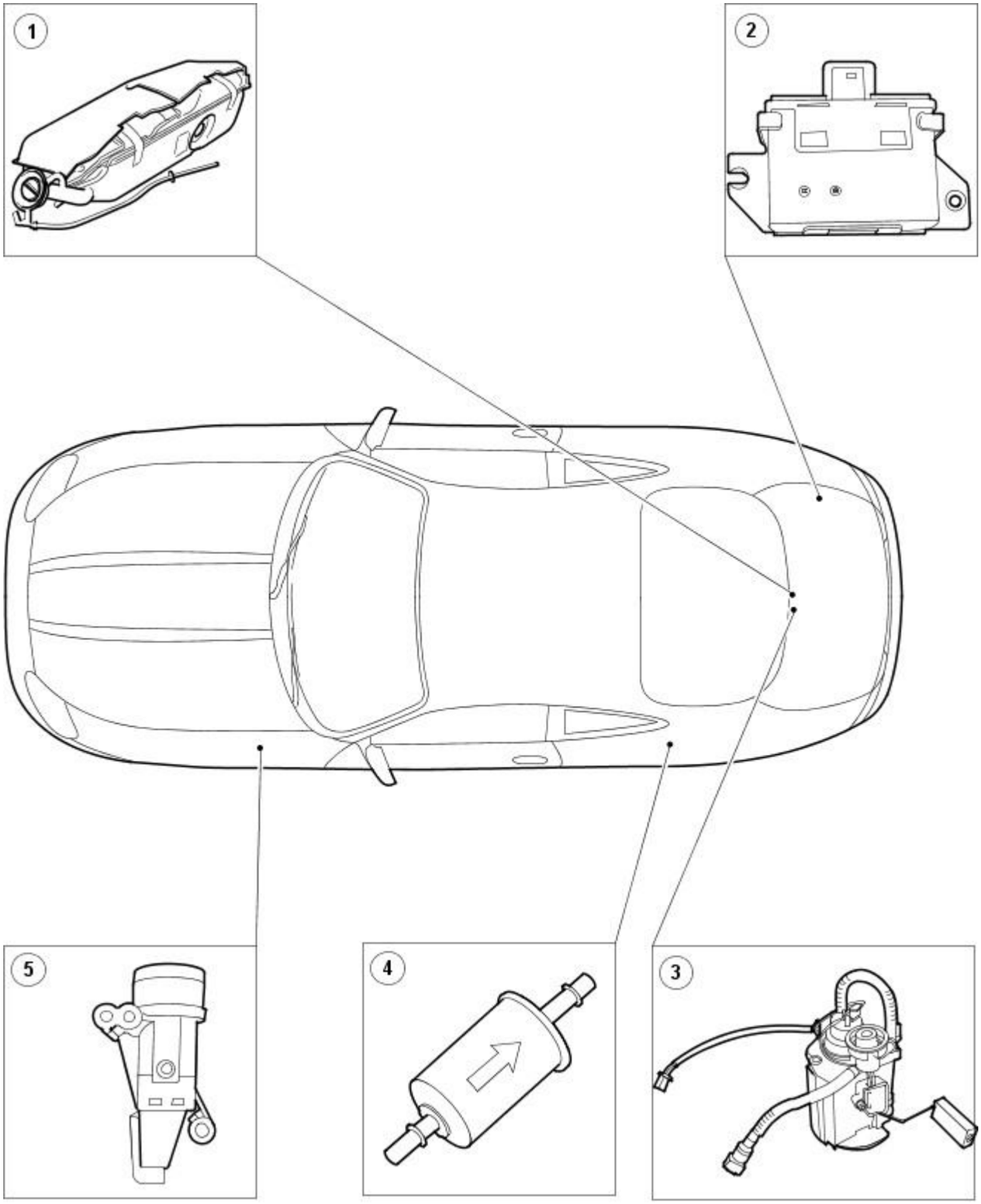

E38032

Item	Part Number	Description
1	-	Fuel tank
2	-	Fuel pump driver module
3	-	Fuel pump module
4	-	Fuel filter
5	-	Inertia fuel shutoff (IFS) switch

Fuel System

The electronic returnless fuel system utilized has the following advantages:

- reduced fuel tank vapor.
- requires less electrical power.
- does not require a fuel return line.

The intelligence of this system is contained within the engine control module (ECM).

Fuel Tank

The steel fuel tank is located inside the luggage compartment and mounted across the vehicle behind the passenger compartment bulkhead. On vehicles without a convertible top the fuel tank is held in position by locating pins at at the front and retaining straps fitted to body-mounted brackets; on vehicles with a convertable top it is held in position by the closing panel and locating pins at the front of the fuel tank.

Fuel Filter

The fuel filter is of a conventional construction being that of a paper element sealed within a steel canister. The fuel filter is located under the left-hand rear seat pan.

Fuel Tank Filler Pipe

The fuel tank filler pipe is integral to the fuel tank and is non-adjustable with a breather.

Inertia Fuel Shutoff (IFS) Switch

The inertia fuel shutoff (IFS) switch is designed to cut power to the fuel pump in the event of an accident. It is located behind the left-hand cowl side trim panel.

Fuel pump driver module

This fuel pump driver module is utilised to regulate the performance of the fuel pump and therefore improve the efficiency of fuel delivery.

Fuel Pump

The fuel pump is located inside the fuel tank. It features an integral fuel level sensor. The fuel pump on vehicles without supercharger is an electric turbine type pump. The fuel pump on vehicles fitted with supercharger is a mechanical gear type pump.

Fuel Tank and Lines - Fuel Tank and Lines

Diagnosis and Testing

Inspection and Verification

1. **1.** Verify the customer concern by operating the system.
2. **2.** Visually inspect for a obvious signs of mechanical damage.

Visual Inspection Chart

Mechanical	Electrical
• Push connect fittings • Fuel lines • Fuel tank filler pipe cap • Fuel Contamination/grade/quality • Fuel leaks • Fuel level	• Fuses. • Wiring harness • Electrical connector(s) • Sensor(s) • Engine control module (ECM) • Inertia fuel shutoff (IFS) switch.

3. **3.** If an obvious cause for an observed or reported concern is found, correct the cause (if possible) before proceeding to the next step
4. **4.** Where the Jaguar approved diagnostic system is available, complete the S93 report before clearing any or all fault codes from the vehicle.

• NOTE: If a DTC cannot be cleared, then there is a permanent fault present that flags again as soon as it is cleared. (The exception to this is P1260, which will only clear following an ignition OFF/ON cycle after rectification.)

5. **5.** If the cause is not visually evident and the Jaguar Approved Diagnostic System is not available, use a fault code reader to retrieve the fault codes before proceeding to the Diagnostic Trouble Code (DTC) Index Chart.
6. **6.** Using the Jaguar approved diagnostic system where available, and a scan tool where not, check the freeze frame data for information on the conditions applicable when the fault was flagged. The format of this will vary, depending on the tool used, but can provide information useful to the technician in diagnosing the fault.

CAUTION: When probing connectors to take measurements in the course of the pinpoint tests, use the adaptor kit, part number 3548-1358-00.

• NOTE: When performing electrical voltage or resistance tests, always use a digital multimeter (DMM) accurate to 3 decimal places, and with an up-to-date calibration certificate. When testing resistance, always take the resistance of the DMM leads into account.

• NOTE: Check and rectify basic faults before beginning diagnostic routines involving pinpoint tests.

Diagnostic Trouble Code (DTC) index

DTC	Description	Possible Source	Action
P0460	Fuel level sensor circuit range/performance	• Fuel level sensor to instrument cluster circuits intermittent short or open circuit, high resistance • Fuel level sensor failure • Instrument cluster fault (incorrect fuel level data)	For fuel level sensor tests, REFER to Section 303-04 Fuel Charging and Controls.
P1234	No fuel pump commands received by ECM	• ECM to fuel pump module drive circuit; open circuit, short circuit • Fuel pump module failure	For fuel pump module tests, REFER to Section 303-04 Fuel Charging and Controls.
P1236	Fuel pump not activated when requested by ECM	• ECM to fuel pump module drive circuit; open circuit, short circuit, high resistance • Fuel pump module failure	For fuel pump module tests, REFER to Section 303-04 Fuel Charging and Controls.
P1338	Fuel pump drive circuit low/high voltage	• Fuel pump module to fuel pump drive circuit; open circuit, short circuit, high resistance • Fuel pump module failure • Fuel pump failure	For fuel pump module tests, REFER to Section 303-04 Fuel Charging and Controls.

Fuel Tank and Lines - Fuel Filter

Removal and Installation

Removal

• WARNINGS:

Place the vehicle in a quarantined area and arrange "No Smoking/Petrol Fumes" signs about the vehicle.

Before any work is carried out on the fuel system, ground the vehicle to earth and maintain the ground connection until the work is complete.

Do not smoke or carry lighted tobacco or open flame of any type when working on or near any fuel related components. Highly flammable vapors are always present and may ignite. Failure to follow these instructions may result in personal injury.

The fuel system remains pressurized for a long time after the ignition is switched off. The fuel pressure must be relieved before attempting any repairs. Failure to follow these instructions may result in personal injury.

After carrying out repairs, the fuel system must be checked visually for leaks. Failure to follow these instructions may result in personal injury.

This procedure involves fuel handling. Be prepared for fuel spillage at all times and always observe fuel handling precautions. Failure to follow these instructions may result in personal injury.

If taken internally do not induce vomiting, seek immediate medical attention. Failure to follow these instructions may result in personal injury.

If fuel contacts the eyes, flush the eyes with cold water or eyewash solution and seek medical attention.

Wash hands thoroughly after handling, as prolonged contact may cause irritation. Should irritation develop, seek medical attention.

1. Release the fuel pressure.
   For additional information, refer to Section 310-00 Fuel System - General Information.
2. Raise and support the vehicle. For additional information, refer to Section 100-02 Jacking and Lifting.
3. Disconnect the fuel filter to fuel injection supply manifold fuel line.
   For additional information, refer to Section 310-00 Fuel System - General Information.

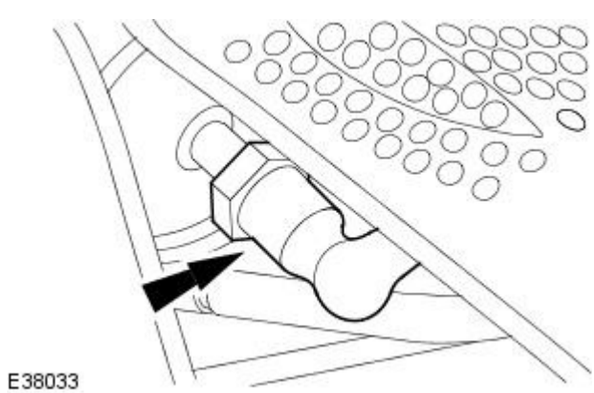

4. Disconnect the fuel tank to fuel filter fuel line.
   For additional information, refer to Section 310-00 Fuel System - General Information.

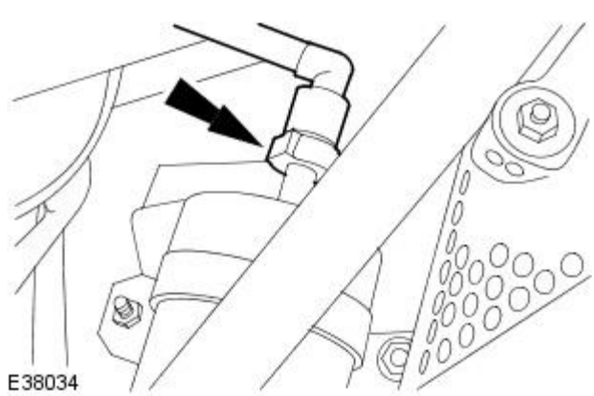

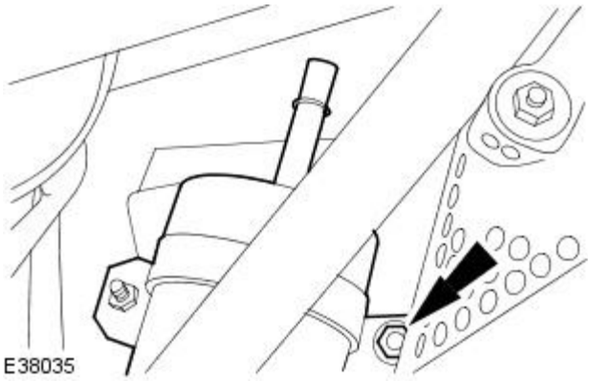

5. Remove the fuel filter and bracket.

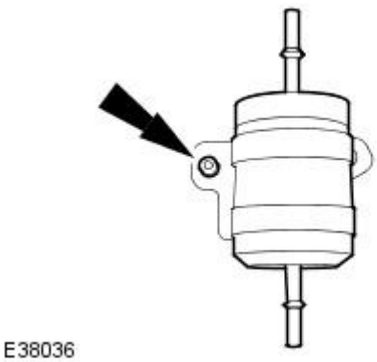

6. NOTE: Observe the direction of the fuel filter fuel flow arrow.

Remove the fuel filter.

Installation

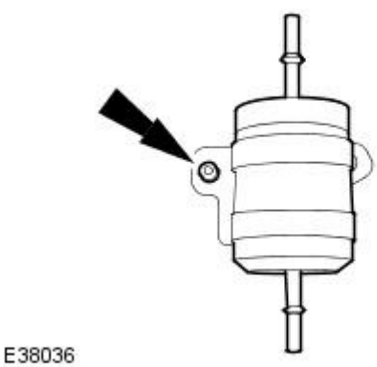

1. NOTE: Make sure the fuel filter fuel flow arrow is correctly positioned.

To install, reverse the removal procedure.

- Tighten to 4 Nm.

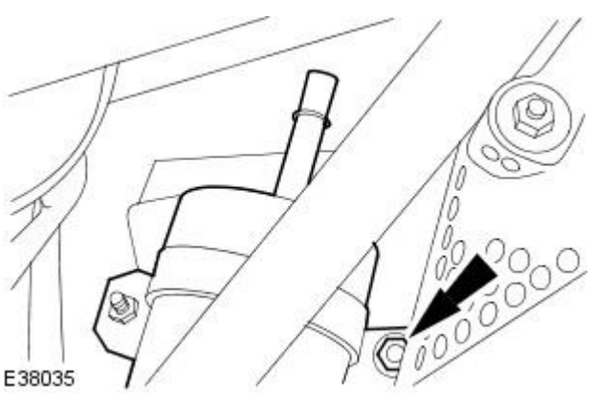

2. Tighten to 4 Nm.

Fuel Tank and Lines - Fuel Pump Driver Module

Removal and Installation

Removal

1. Disconnect the battery ground cable.
   For additional information, refer to Section 414-01 Battery, Mounting and Cables.
2. Remove the right-hand luggage compartment side trim panel.
   For additional information, refer to Section 501-05 Interior Trim and Ornamentation.
3. Disconnect the fuel pump driver module electrical connector.

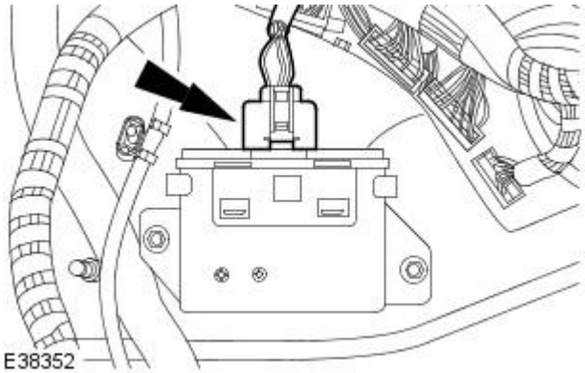

4. Remove the fuel pump driver module.

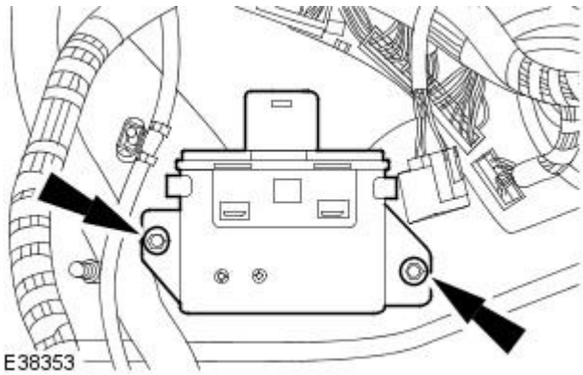

Installation

1. To install, reverse the removal procedure.
   - Tighten to 8 Nm.

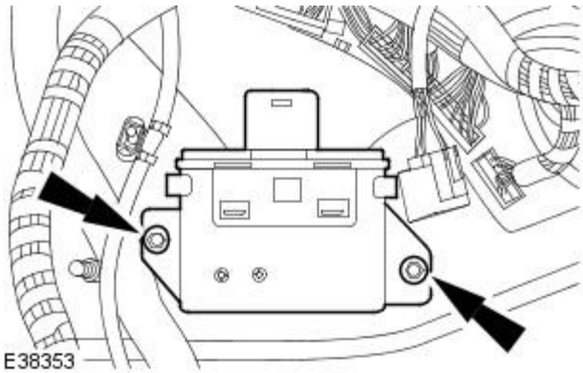

Fuel Tank and Lines - Fuel Pump Module

Removal and Installation

Removal

• WARNINGS:

Place the vehicle in a quarantined area and arrange "No Smoking/Petrol Fumes" signs about the vehicle.

Before any work is carried out on the fuel system, ground the vehicle to earth and maintain the ground connection until the work is complete.

Do not smoke or carry lighted tobacco or open flame of any type when working on or near any fuel related components. Highly flammable vapors are always present and may ignite. Failure to follow these instructions may result in personal injury.

The fuel system remains pressurized for a long time after the ignition is switched off. The fuel pressure must be relieved before attempting any repairs. Failure to follow these instructions may result in personal injury.

After carrying out repairs, the fuel system must be checked visually for leaks. Failure to follow these instructions may result in personal injury.

This procedure involves fuel handling. Be prepared for fuel spillage at all times and always observe fuel handling precautions. Failure to follow these instructions may result in personal injury.

If taken internally do not induce vomiting, seek immediate medical attention. Failure to follow these instructions may result in personal injury.

If fuel contacts the eyes, flush the eyes with cold water or eyewash solution and seek medical attention.

Wash hands thoroughly after handling, as prolonged contact may cause irritation. Should irritation develop, seek medical attention.

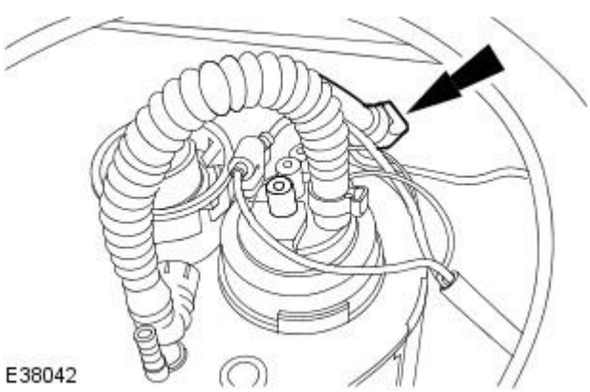

1. Remove the fuel vapor vent valve housing.
   For additional information, refer to Section 303-13 Evaporative Emissions.
2. Disconnect the fuel line.
   For additional information, refer to Section 310-00 Fuel System - General Information.

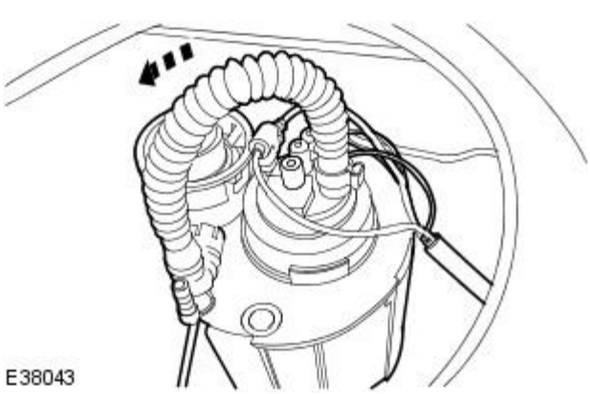

3. Remove the fuel pump module.
   - Rotate the fuel pump module counter-clockwise.

Installation

1. To install, reverse the removal procedure.

Fuel Tank and Lines - Fuel Tank

Removal and Installation

Special Tool(s)	
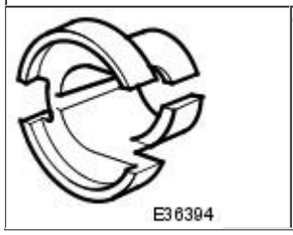 E36394	Quick Fit Connector Release Tool 310-054

Removal

• WARNINGS:

Place the vehicle in a quarantined area and arrange "No Smoking/Petrol Fumes" signs about the vehicle.

Before any work is carried out on the fuel system, ground the vehicle to earth and maintain the ground connection until the work is complete.

Do not smoke or carry lighted tobacco or open flame of any type when working on or near any fuel related components. Highly flammable vapors are always present and may ignite. Failure to follow these instructions may result in personal injury.

The fuel system remains pressurized for a long time after the ignition is switched off. The fuel pressure must be relieved before attempting any repairs. Failure to follow these instructions may result in personal injury.

After carrying out repairs, the fuel system must be checked visually for leaks. Failure to follow these instructions may result in personal injury.

This procedure involves fuel handling. Be prepared for fuel spillage at all times and always observe fuel handling precautions. Failure to follow these instructions may result in personal injury.

If taken internally do not induce vomiting, seek immediate medical attention. Failure to follow these instructions may result in personal injury.

If fuel contacts the eyes, flush the eyes with cold water or eyewash solution and seek medical attention.

Wash hands thoroughly after handling, as prolonged contact may cause irritation. Should irritation develop, seek medical attention.

All vehicles

1. Open the fuel filler flap from inside vehicle.
2. Release the fuel system pressure.
   For additional information, refer to Section 310-00 Fuel System - General Information.
3. Remove the battery.
   For additional information, refer to Section 414-01 Battery, Mounting and Cables.
4. Drain the fuel tank.
   For additional information, refer to Section 310-00 Fuel System - General Information.
5. Remove the luggage compartment front trim panel.
   For additional information, refer to Section 501-05 Interior Trim and Ornamentation.
6. Remove the left-hand luggage compartment side trim panel.
   For additional information, refer to Section 501-05 Interior Trim and Ornamentation.
7. Remove the right-hand luggage compartment side trim panel.
   For additional information, refer to Section 501-05 Interior Trim and Ornamentation.

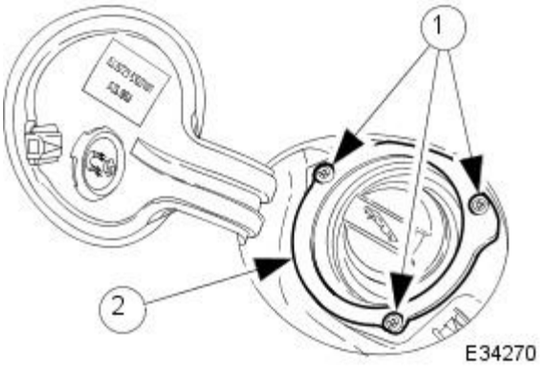

8. Remove fuel tank filler pipe retaining plate.

1. Remove the fuel tank filler pipe retaining bolts.
2. Remove fuel tank filler pipe retaining plate.

Vehicles with convertible top

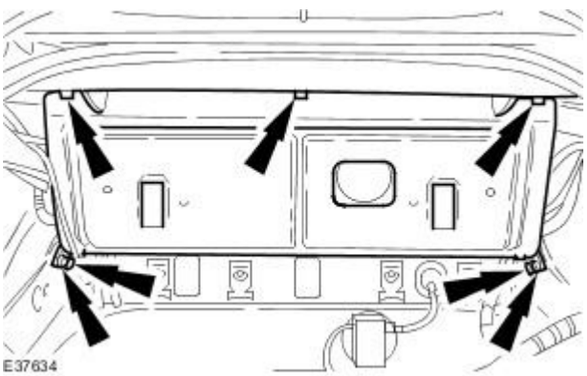

9. Remove the fuel tank access panel.

Vehicles without convertible top

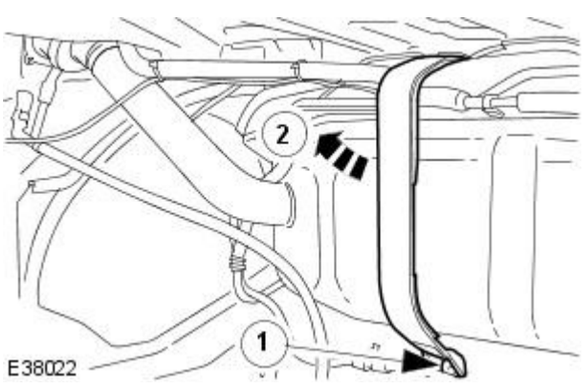

10. NOTE: Left-hand shown, right-hand similar.

Reposition the fuel tank support straps.

1. Remove the fuel tank support strap retaining bolts.
2. Reposition the fuel tank support straps.

All vehicles

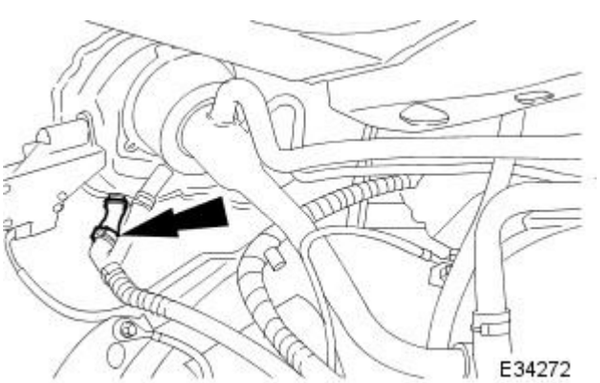

11. Disconnect the fuel tank filler pipe drain hose.

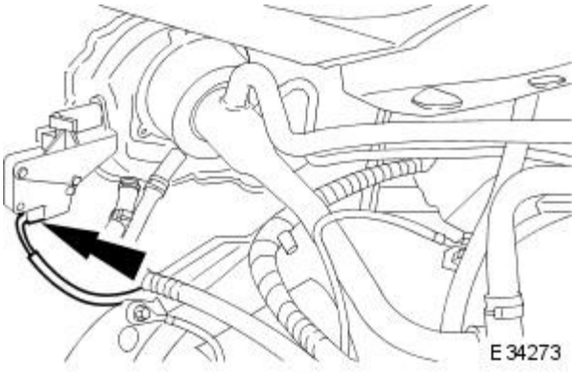

12. Disconnect the fuel tank filler pipe flap actuator electrical connector.

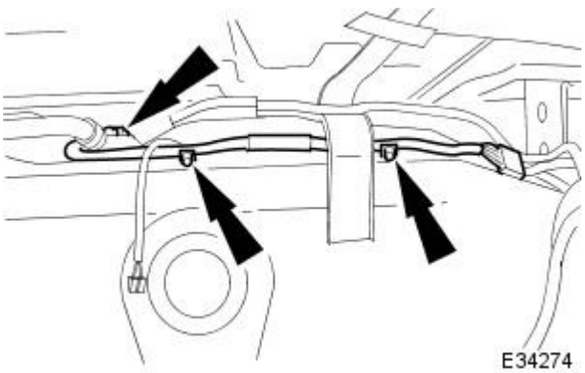

13. Detach the fuel tank wiring harness.

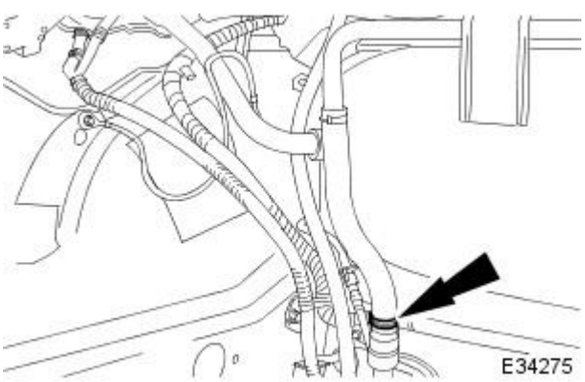

14. NOTE: Vehicles with on-board refueling vapour recovery shown, vehicles without on-board refueling vapour recovery similar.

Disconnect the fuel tank breather hose.

15. Raise and support the vehicle. For additional information, refer to Section 100-02 Jacking and Lifting.

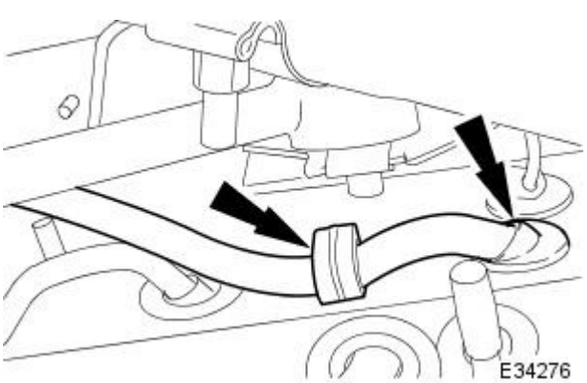

16. Guide the fuel tank filler pipe drain hose through the luggage compartment floor.

- Detach the fuel tank filler pipe drain hose
- Guide the fuel tank filler pipe drain hose through the luggage compartment floor.

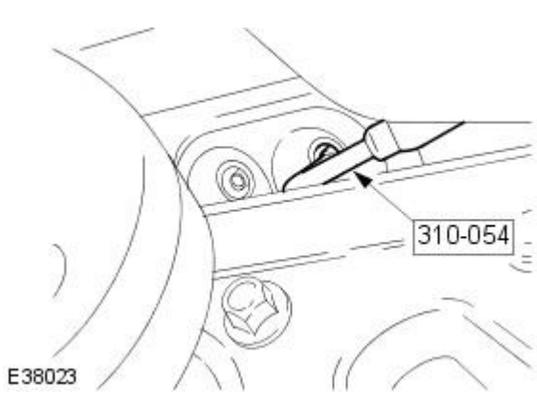

17. Using the special tool disconnect the fuel pipe.

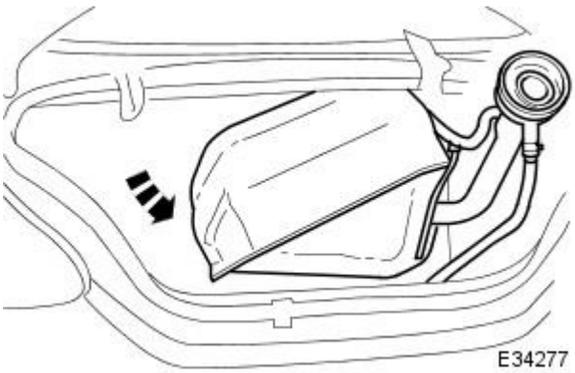

18. Lower the vehicle.

19. CAUTIONS:

Make sure the left-hand side of the vehicle body is not damaged by the fuel tank filler pipe on removal of the fuel tank.

Make sure the luggage compartment wiring harness is not damaged on removal of the fuel tank.

Remove the fuel tank.

- Reposition the fuel tank rearwards into the luggage compartment area.
- Raise the fuel tank and rotate it through 90° counterclockwise until the fuel tank filler pipe protrudes rearwards, out of the luggage compartment.
- Remove the fuel tank.

Installation

All vehicles

1. To install, reverse the removal procedure.

Vehicles with convertible top

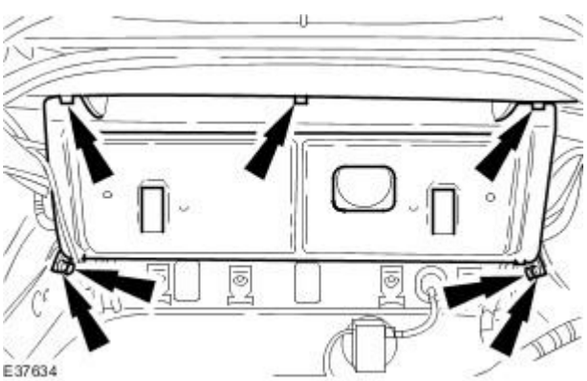

2. Tighten to 25 Nm.

Fuel Tank and Lines - Inertia Fuel Shutoff (IFS) Switch

Removal and Installation

Removal

1. Remove the left-hand cowl side trim panel.
   For additional information, refer to Section 501-05 Interior Trim and Ornamentation.
2. Detach the electrical connectors from the wiring harness retaining bracket.

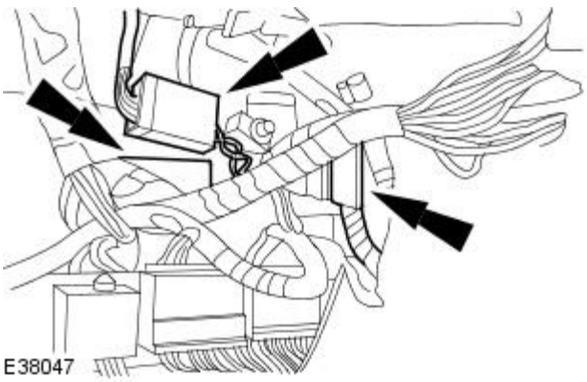

3. Remove the wiring harness retaining bracket.

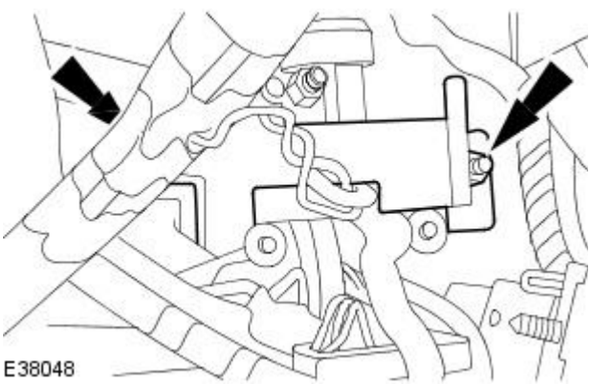

4. Detach the inertia fuel shutoff (IFS) switch.
   - Remove the inertia switch retaining nuts.

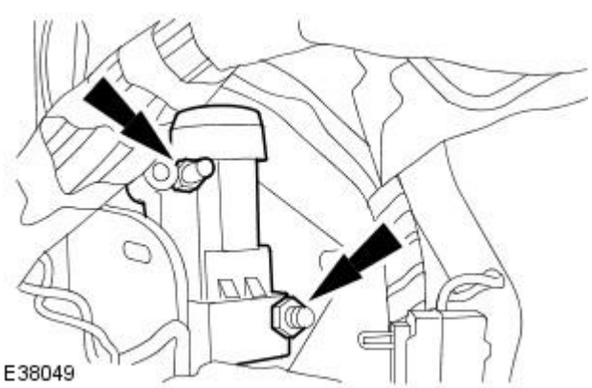

5. Remove the IFS switch.
   - Disconnect the IFS switch electrical connector.

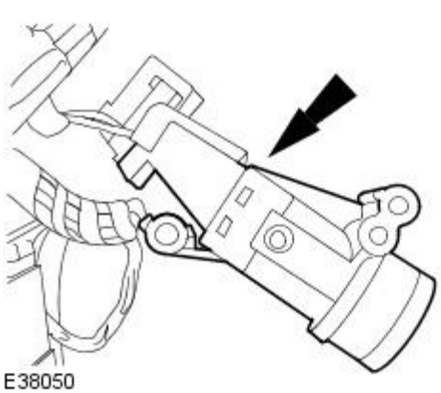

Installation

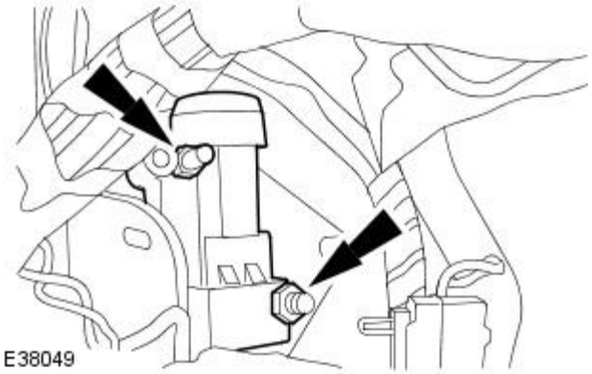

1. NOTE: Install new IFS switch retaining nuts.

To install, reverse the removal procedure.

- Tighten to 2 Nm.

Acceleration Control -

Torque Specifications

Description	Nm	lb-ft	lb-in
Acceleratror pedal retaining bolts	9	-	80

Published: 11-May-2011

Acceleration Control - Acceleration Control

Description and Operation

Accelerator pedal, right-hand drive vehicles

E37952

Accelerator pedal, left-hand drive vehicles

E37953

When the accelerator pedal is pressed, the engine control module (ECM) monitors the angle of the accelerator pedal through the accelerator pedal position (APP) sensor.
For additional information, refer to Section 303-14 Electronic Engine Controls.
The APP sensor is connected to the accelerator pedal through an accelerator cable.

The ECM then provides an output, based on the accelerator pedal position, which drives a DC motor to position the throttle to the required angle. The throttle position is monitored by two sensors for rational value.

The ECM has the necessary safety features to monitor the correct operation of all the components. Depending on the failure state, the ECM can put acceleration control system into an appropriate safe state, from restricting the RPM to limphome mode.

Acceleration Control - Acceleration Control

Diagnosis and Testing

Inspection and Verification

1. **1.** Verify the customer concern by operating the system.
2. **2.** Visually inspect for a obvious signs of mechanical damage.

Visual Inspection Chart

Mechanical	Electrical
• Accelerator pedal • Accelerator cable • Accelerator cable adjustment	• Fuses. • Wiring harness • Electrical connector(s) • Engine control module (ECM) • Accelerator pedal position sensor

3. **3.** If an obvious cause for an observed or reported concern is found, correct the cause (if possible) before proceeding to the next step
4. **4.** Where the Jaguar approved diagnostic system is available, complete the S93 report before clearing any or all fault codes from the vehicle.

• NOTE: If a DTC cannot be cleared, then there is a permanent fault present that flags again as soon as it is cleared. (The exception to this is P1260, which will only clear following an ignition OFF/ON cycle after rectification.)

5. **5.** If the cause is not visually evident and the Jaguar Approved Diagnostic System is not available, use a fault code reader to retrieve the fault codes before proceeding to the Diagnostic Trouble Code (DTC) Index Chart.
6. **6.** Using the Jaguar approved diagnostic system where available, and a scan tool where not, check the freeze frame data for information on the conditions applicable when the fault was flagged. The format of this will vary, depending on the tool used, but can provide information useful to the technician in diagnosing the fault.

CAUTION: When probing connectors to take measurements in the course of the pinpoint tests, use the adaptor kit, part number 3548-1358-00.

• NOTE: When performing electrical voltage or resistance tests, always use a digital multimeter (DMM) accurate to 3 decimal places, and with an up-to-date calibration certificate. When testing resistance, always take the resistance of the DMM leads into account.

• NOTE: Check and rectify basic faults before beginning diagnostic routines involving pinpoint tests.

Diagnostic Trouble Code (DTC) index

DTC	Description	Possible Source	Action
P1122	Accelerator pedal position (APP) sensor circuit low voltage - APP1	• APP sensor to ECM sensing circuit "1"; open circuit, short circuit to ground or high resistance • APP sensor power supply circuit; open circuit, high resistance • APP sensor failure	REFER to Section 303-14 Electronic Engine Controls.
P1123	Accelerator pedal position (APP) sensor circuit high voltage - APP1. Note; This DTC could be flagged by both sensor element circuits having faults	• APP sensor to ECM sensing circuit(s) short circuit to high voltage • APP sensor ground circuit(s) open circuit • APP sensor failure	REFER to Section 303-14 Electronic Engine Controls.
P1215	Accelerator pedal position (APP) sensor sensing circuit low voltage - APP2	• APP sensor to ECM sensing circuit (APP2); open circuit, short circuit to ground, high resistance • APP sensor supply circuit (to splice) open circuit, high resistance • APP sensor failure	REFER to Section 303-14 Electronic Engine Controls.
P1216	Accelerator pedal position (APP) sensor sensing circuit high voltage - APP2. Note; This DTC could be flagged by both sensor element circuits having faults	• APP sensor to ECM sensing circuit(s) short circuit to high voltage • APP sensor ground circuit(s) (to splice) open circuit • APP sensor failure	REFER to Section 303-14 Electronic Engine Controls.
P1344	Accelerator pedal position (APP) sensor sensing circuits range/performance	• APP sensor to ECM sensing circuits; short circuit, open circuit, high resistance • APP sensor supply circuits; short circuit, open circuit, high resistance • APP sensor ground circuits; open circuit • APP sensor failure	REFER to Section 303-14 Electronic Engine Controls.

Acceleration Control - Accelerator Cable Adjustment

General Procedures

Special Tool(s)	
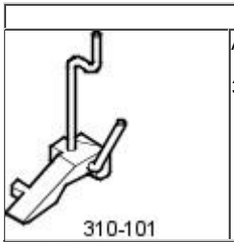 310-101	Accelerator cable adjustment tool 310-101

• NOTE: Right-hand drive vehicles shown, left-hand drive vehicles similar.

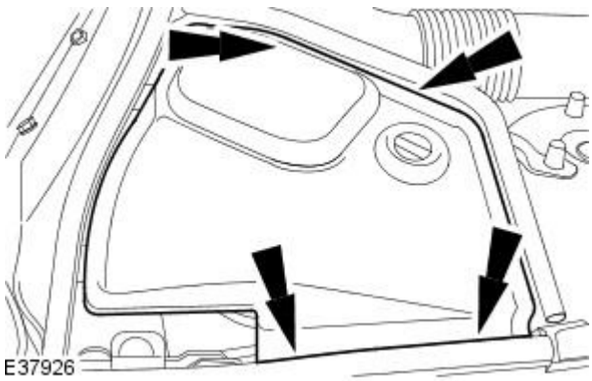

1. Make sure the kickdown plunger is fully seated to the retaining stud shoulder.

2. Remove the driver side bulkhead cover.

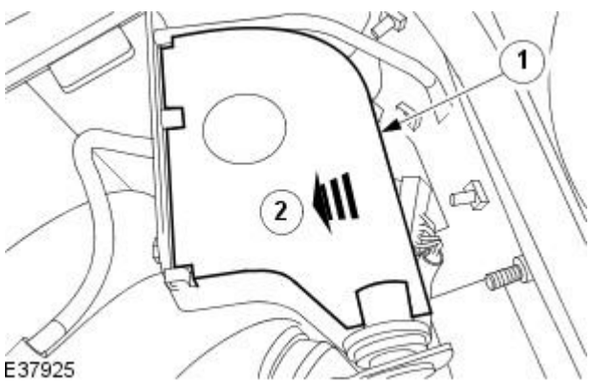

3. Open the accelerator pedal position (APP) sensor cover.

1. Release the APP sensor cover retaining clip.
2. Open the APP sensor cover.

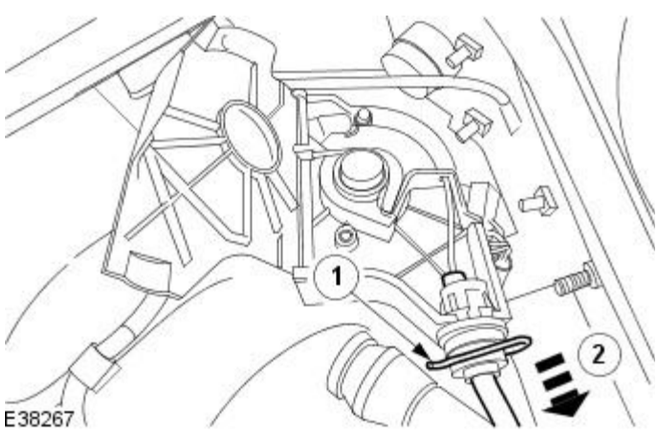

4. Tension the accelerator cable.

1. Remove the accelerator outer cable retaining clip.

• NOTE: Make sure 14 teeth are visible on the outer cable.

2. Tension the accelerator cable

5. Install the accelerator outer cable retaining clip.

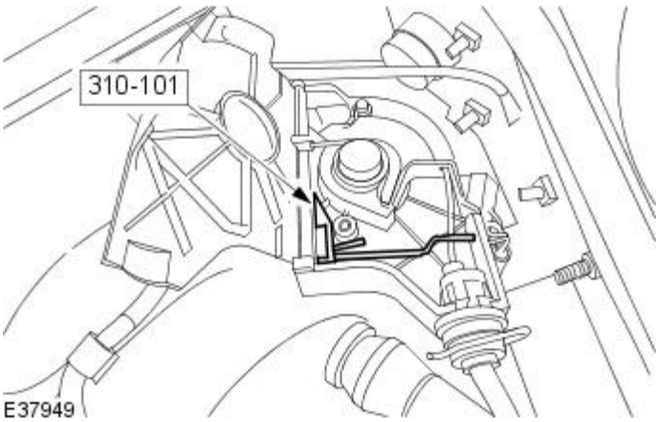

6. Install the special tool to the APP sensor.

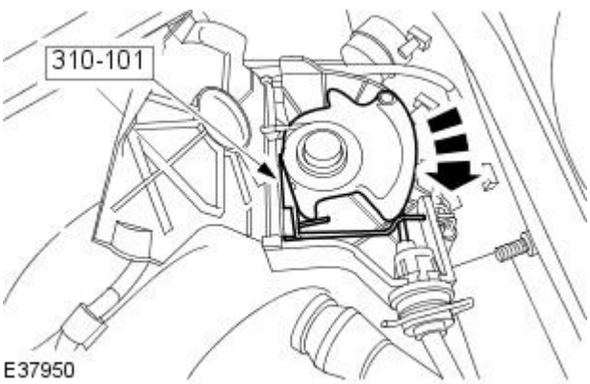

7. CAUTION: The accelerator cable must be adjusted by pressing the accelerator pedal. Failure to follow this instruction may result in incorrect cable adjustment.

Using the special tool adjust the accelerator cable.

- Slowly press the accelerator pedal through kickdown to the floor, and hold for five seconds.

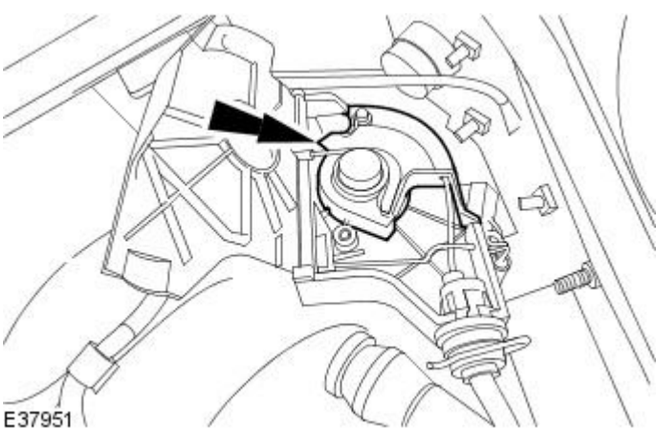

8. Release the accelerator pedal.

9. Make sure the APP sensor cam is at the idle position.

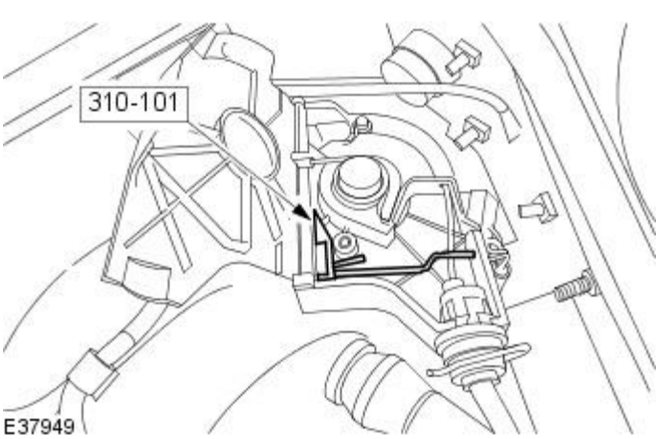

10. Remove the special tool.

11. Close the APP sensor cover.

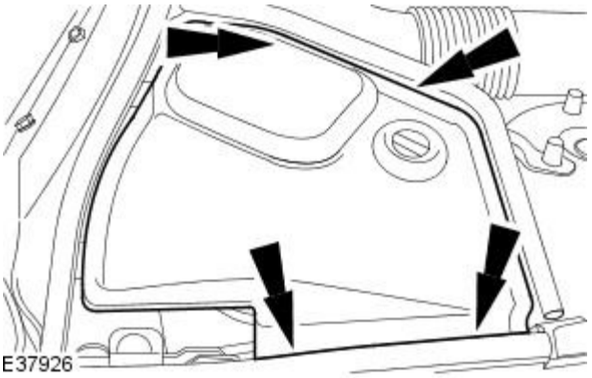

12. Install the driver side bulkhead cover.

Acceleration Control - Accelerator Cable

Removal and Installation

Removal

• NOTE: Right-hand drive vehicles shown, left-hand drive vehicles similar.

1. Remove and discard the accelerator cable retaining sleeve split pin.

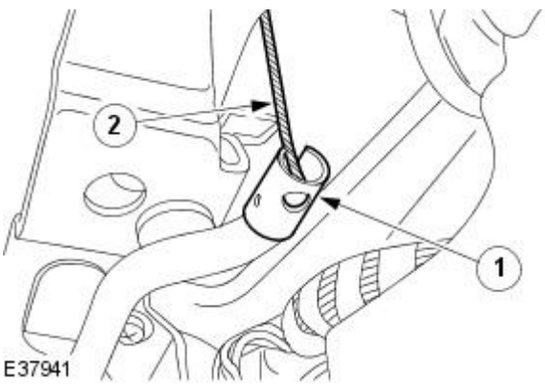

2. Detach the accelerator cable.

1. Remove the accelerator cable retaining sleeve.
2. Detach the accelerator cable.

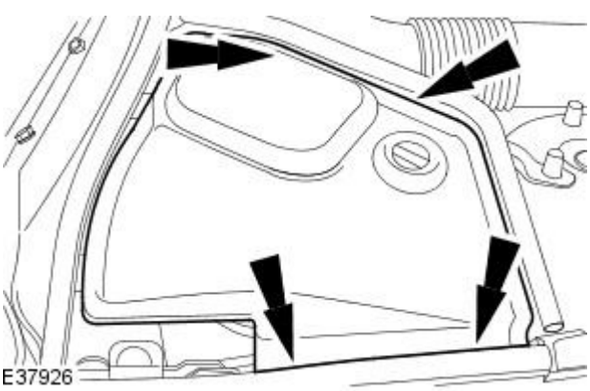

3. Remove the driver side bulkhead cover.

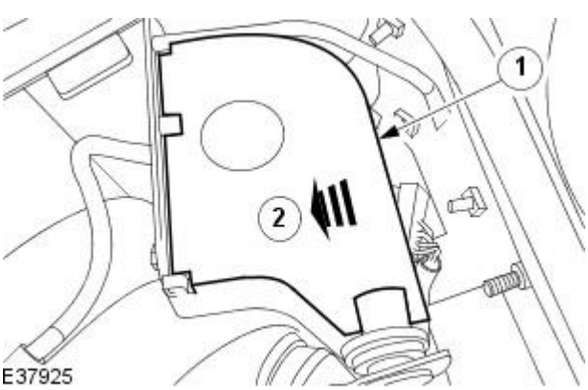

4. Open the accelerator pedal position (APP) sensor cover.

1. Release the APP sensor cover retaining clip.
2. Open the APP sensor cover.

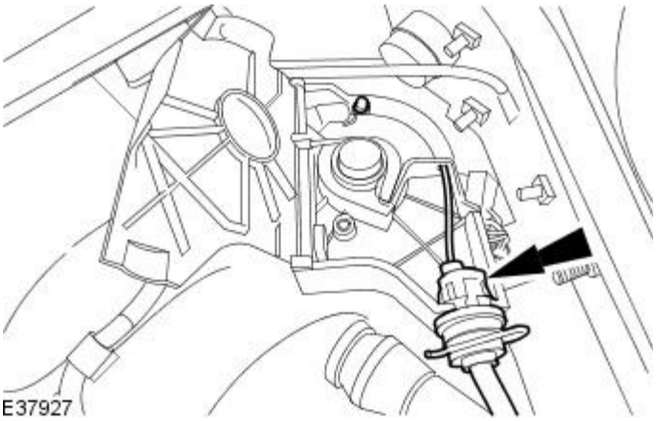

5. Detach the accelerator cable.

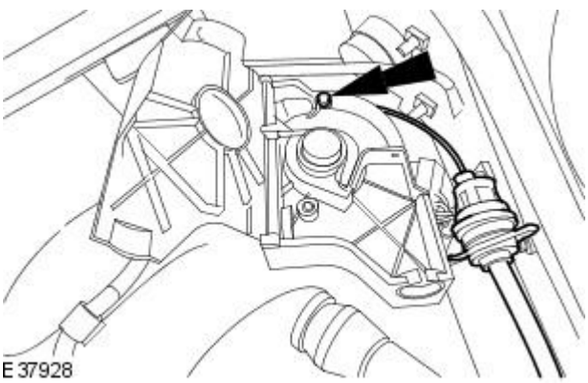

6. Detach the accelerator inner cable.

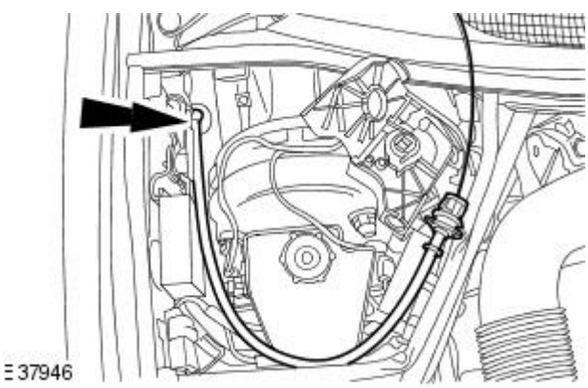

7. NOTE: Note the accelerator cable position.

Remove the accelerator cable.

Installation

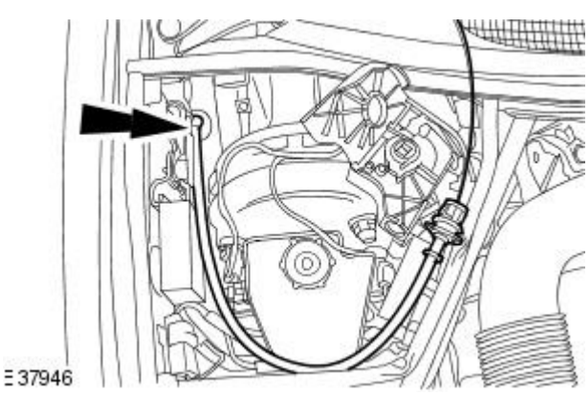

1. CAUTION: Do not lubricate the accelerator cable. Failure to follow this instruction may result in incorrect cable adjustment.

• NOTE: Install the accelerator cable to the position noted on removal.

Install the accelerator cable.

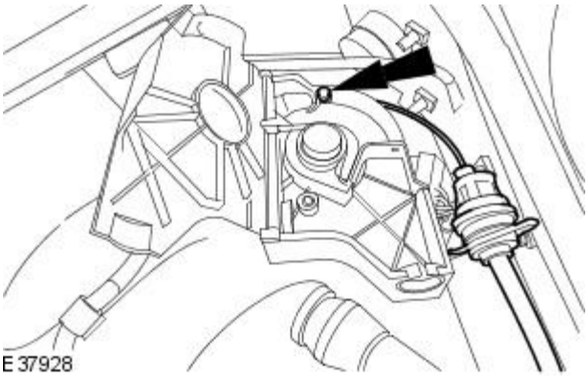

2. Attach the accelerator inner cable.

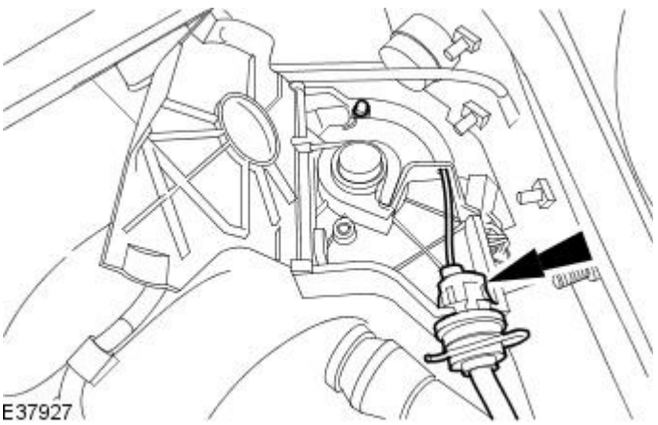

3. Attach the accelerator cable.

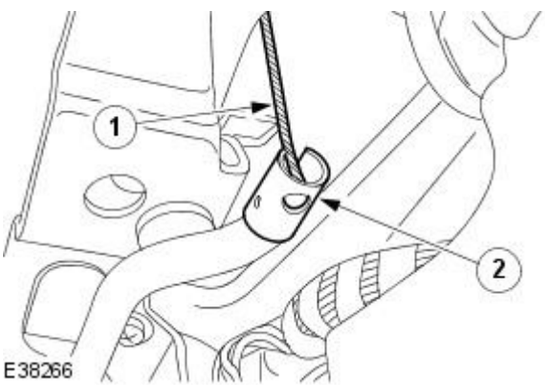

4. Attach the accelerator cable retaining sleeve.

1. Attach the accelerator cable.
2. Install the accelerator cable retaining sleeve.

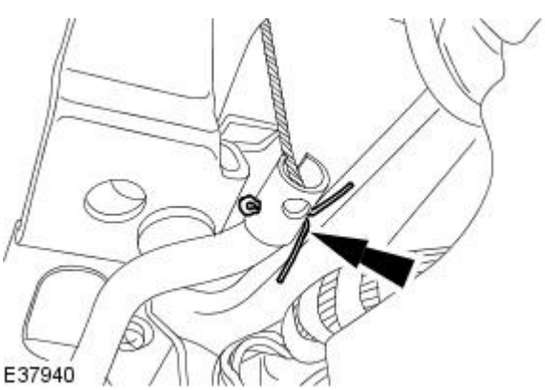

5. Install a new accelerator cable retaining sleeve split pin.

6. Adjust the accelerator cable.
For additional information, refer to Accelerator Cable Adjustment - in this section.

Acceleration Control - Accelerator Pedal

Removal and Installation

Removal

All vehicles

1. Remove and discard the accelerator cable retaining sleeve split pin.

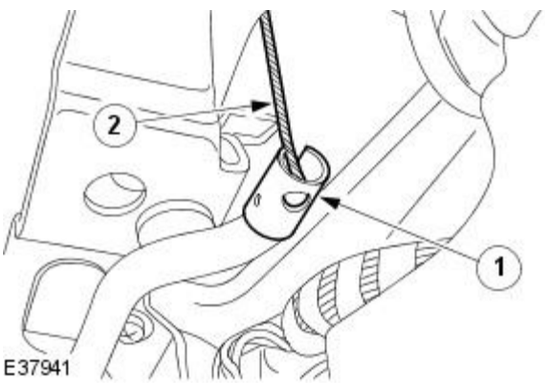

2. Detach the accelerator cable.

1. Remove the accelerator cable retaining sleeve.
2. Detach the accelerator cable.

Right-hand drive vehicles

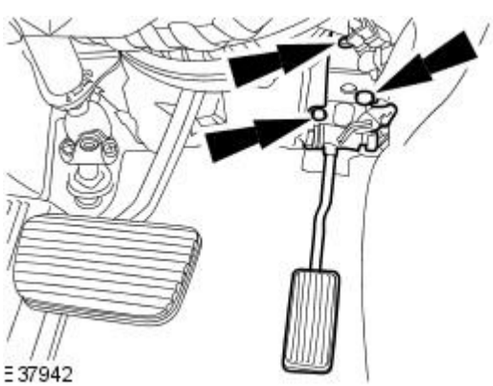

3. Remove the accelerator pedal.

Left-hand drive vehicles

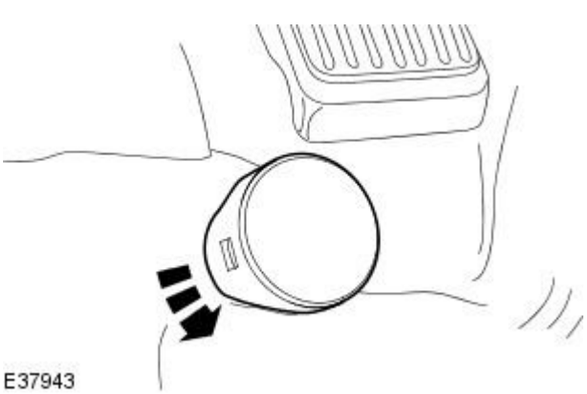

4. Remove the kickdown plunger.

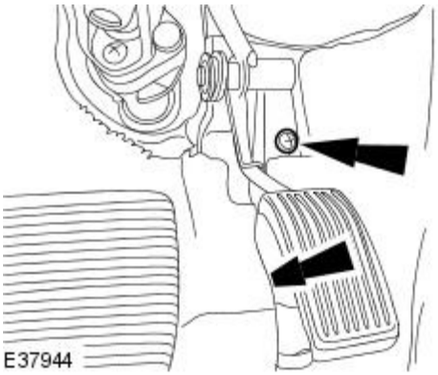

5. CAUTION: Make sure damage does not occur to the floor covering.

Remove the accelerator pedal retaining bolts.

- Reposition the floor covering to gain access to the accelerator pedal lower retaining bolt.

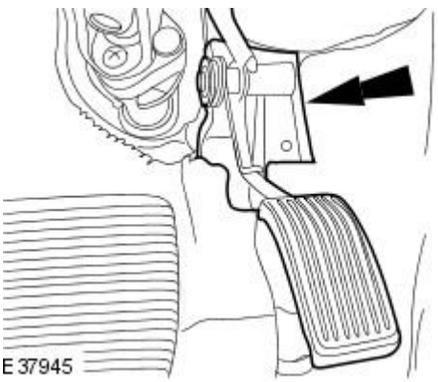

6. CAUTION: Make sure damage does not occur to the floor covering.

Remove the accelerator pedal.

- Reposition the floor covering to gain access to the accelerator pedal.

Installation

All vehicles

1. To install, reverse the removal procedure.

Right-hand drive vehicles

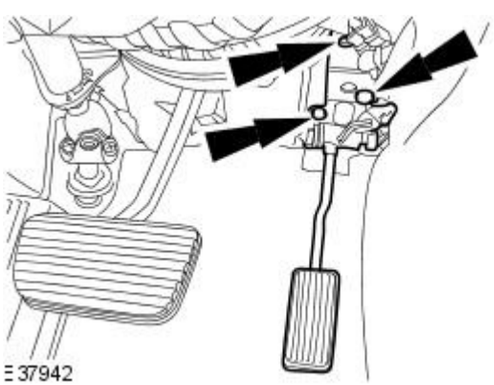

2. NOTE: Make sure the accelerator pedal return spring is correctly located.

Tighten to 9 Nm.

Left-hand drive vehicles

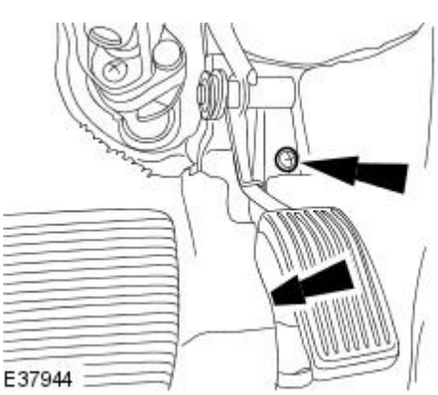

3. CAUTION: Make sure damage does not occur to the floor covering.

• NOTE: Make sure the accelerator pedal return spring is correctly located.

Tighten to 9 Nm.

All vehicles

4. Adjust the accelerator cable.
For additional information, refer to Accelerator Cable Adjustment - in this section.

Published: 11-May-2011

Speed Control -

General Specifications

Item	Specification
Speed control module vertical alignment	90° ± 0.75°

Torque Specifications

Description	Nm	lb-ft	lb-in
Speed control module retaining nuts	5	-	44
Speed control module alignment bolt lock nut	5	-	44

Speed Control - Speed Control

Description and Operation

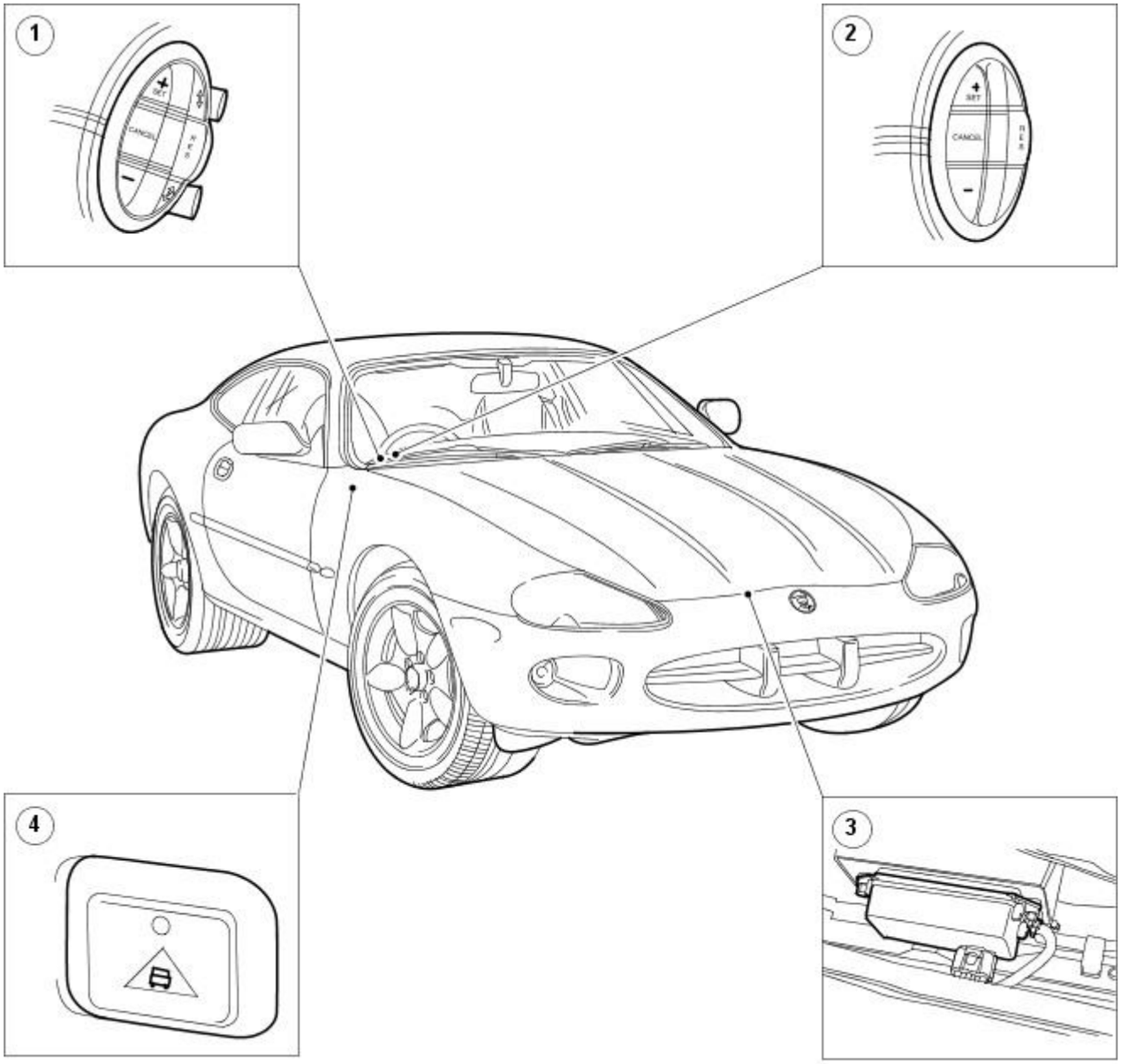

E38345

Item	Part Number	Description
1	-	Speed control switch - vehicles with adaptive speed control
2	-	Speed control switch - vehicles without adaptive speed control
3	-	Speed control module - vehicles with adaptive speed control
4	-	Forward alert switch - vehicles with adaptive speed control

The Speed Control system offers the driver relaxed vehicle cruising by enabling a pre-set constant vehicle speed to be maintained without driver operation of the accelerator pedal.

Speed control switch - vehicles without adaptive speed control

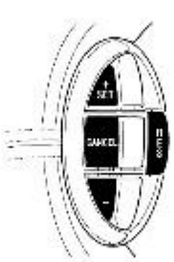

E34264

The speed control switch provides for driver increase (SET +) or decrease (-) of set vehicle speed, suspension of system operation with set speed memorized (CANCEL) and resumption of operation at memorized vehicle speed (RESUME). The vehicle speed control system will not operate below 26km/h (16mph).

The set vehicle speed can be increased or decreased in 2km/h (1mph) increments by briefly pressing the (SET +) or (-) control button. Alternatively, the (SET +) or (-) button can be pressed and held until the required vehicle speed is reached.

Automatic switch off - vehicles without adaptive speed control

The speed control will disengage, but not clear the memory when:

- the CANCEL button is activated.
- the brake pedal is applied.
- the vehicle speed falls below 26Km/h (16mph).
- neutral, park or reverse gear positions are selected.
- traction control is activated.

The speed control will disengage, and clear the memory when:

- the ignition switch is set to position '0'.
- maximum vehicle speed is reached.
- the parkbrake is applied.
- a fault occurs in the adaptive speed control system.

Speed control failure - vehicles without adaptive speed control

If a fault occurs during any speed control operation the speed control system will be deactivated and will remain in this state until the fault is rectified. The message center will display 'CRUISE NOT AVAILABLE'.

Adaptive speed control

On vehicles for certain markets, an adaptive speed control system is installed as an option. In addition to the normal vehicle speed control functions, this system enables a preset distance to be maintained behind a moving vehicle immediately ahead, without driver intervention.

Speed control switch - vehicles with adaptive speed control

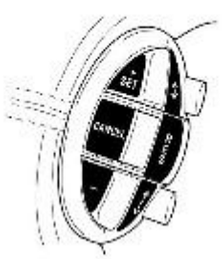

E34269

Automatic switch off - vehicles with adaptive speed control

The adaptive speed control will disengage, but not clear the memory when:

- the CANCEL button is activated.
- the brake pedal is applied.
- the vehicle speed falls below 26Km/h (16mph).
- neutral, park or reverse gear positions are selected.
- traction control is activated.

The adaptive speed control will disengage, and clear the memory when:

- the ignition switch is set to position '0'.
- maximum vehicle speed is reached.
- the parkbrake is applied.
- a fault occurs in the adaptive speed control system.

Forward alert

The forward alert system is switched on and off by the forward alert switch. The forward alert system additionally provides warnings while the adaptive speed control is not activated.

Speed control module

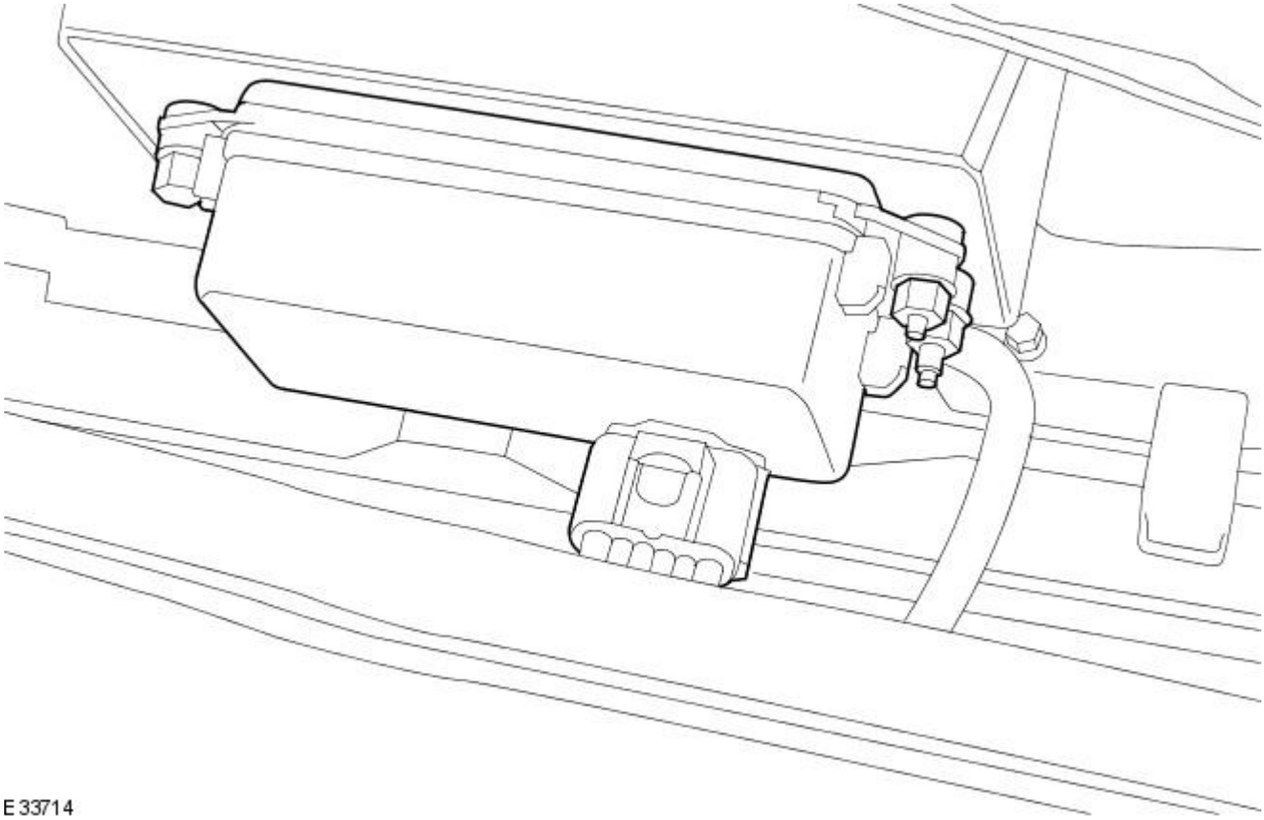

E 33714

The speed control module incorporates a radar sensor and yaw rate sensor to provide system control functions.

Adaptive speed control failure

If a fault occurs during any adaptive speed control operation the adaptive speed control system will be deactivated and will remain in this state until the fault is rectified. The message center will display 'CRUISE NOT AVAILABLE'.

Published: 11-May-2011

Speed Control - Speed Control

Diagnosis and Testing

Principles of Operation

There are two types of speed (cruise) control fitted, adaptive cruise control (ACC) and non-adaptive.

The non-adaptive system maintains a road speed selected by the driver from the steering wheel switches, and is cancelled by inputs from the steering wheel **cancel** switch, the brake pedal (the system will disengage if the brake pedal is pressed), road speed (the system will disengage if the road speed falls below 26 kph [16 mph]), gear selector position (the system will disengage if **Neutral, Park** or **Reverse** gears are selected), traction or stability control (the system will disengage if the traction or stability control is activated).

The adaptive system also maintains a road speed selected by the driver from the steering wheel switches, and is cancelled by the same inputs (the only difference being that the selected speed will show in the message center display), but can also maintain a selected distance from the vehicle in front.

When the system is enabled, the vehicle will maintain the selected speed until another vehicle is detected travelling in the same lane and direction, when it will enter **follow mode.**

In this mode, the vehicle will maintain a time gap from the vehicle in front, rather than the selected speed. **This is not a fault**, but a designed feature of the system. The time gap is adjustable, using the **headway** switches on the steering wheel switchpack, but will default to a longer gap, unless overridden by the driver.

When the vehicle enters **follow mode**, the message center will display the **ACC** tell-tale symbol (see the owner's handbook), with a **gap** indication for four seconds, and the vehicle will maintain the gap from the vehicle in front until;

- The vehicle in front accelerates to a speed above the selected speed, in which case the selected speed will be resumed
- The vehicle in front moves out of lane, or out of view, in which case the selected speed will be resumed
- The vehicle in front slows to below 26 km/h (16 mph), at which speed the system disengages, the message **driver intervene** will display on the message center, and any braking applied by the ACC system will reduce. **This is not a fault** but may involve the driver having to take control and brake him/herself.
- A new gap distance is set by the driver from the steering wheel switches

The ACC system can apply the brakes to maintain the gap to the vehicle in front. The braking force which the system can apply is limited, but can be overridden by the driver braking. This action will cancel the cruise control function, but the system will "remember" the selected speed, and will resume the selected speed by the driver pressing the **resume** switch on the steering wheel switchpack

• NOTE: When the system applies the brakes, the brake lights will function exactly as if the driver were braking.

It is possible (for example, when a slow-moving vehicle pulls out into the lane in front), for the degree of braking necessary to avoid a collision to exceed the maximum level of the ACC system. Should this happen, an audible warning will sound, accompanied by a **red** warning light and a **driver intervene** display on the message center, at which point, the driver must take action. **This is not a fault**, but a designed feature of the system.

Should the driver need to go faster than the selected speed, he/she can override the system simply by pressing the accelerator, in which case, the message center will display **cruise override.** When the pedal is released, the system will resume operation in whichever mode is appropriate, follow or selected speed.

Detection

As with most sensors, there are certain conditions under which detection issues can occur. The owner/driver's attention should be drawn to the driver's handbook to avoid misunderstandings as to what is, and isn't, a fault.

Detection issues may occur;

- When driving on a different line to the vehicle in front
- When vehicles edge into your lane
- When going into or coming out of a bend
- With detecting motorcycles
- With detecting stationary objects, such as traffic queues, broken down vehicles, etc

In circumstances such as these, the ACC system may brake late or unexpectedly, or may increase speed. **This is not a fault**, but is the system reacting to detection issues.

The owner's handbook makes it clear that the system should only be used under suitable conditions, but technicians should be wary of wasting time on complaints which are not actually faults.

Inspection and verification

1. **1.** Verify the customer concern.

2. **2.** Confirm which, if any, warning lights and/or messages were displayed on the instrument cluster.

• NOTE: If any warning lights and/or messages were displayed when the fault occurred, refer to the Driver Information table for DTCs associated with the display, then to the DTC index table for possible sources and actions. Some warnings will appear to clear when the ignition is cycled. This is often because the warning has flagged as a result of one of the vehicle's on-board diagnostic routines having run to detect the fault. If the same routine is not run when the ignition is switched **ON**, the warning will not reflag until the routine does run. See the DTC summaries for drive cycle routines.

3. **3.** Visually inspect for obvious signs of mechanical or electrical damage.

Visual Inspection Chart

Mechanical	Electrical
• Engine oil level • Cooling system coolant level • Fuel level • Fuel Contamination/grade/quality • Throttle body • Poly-vee belt	• Fuses • Wiring harness • Electrical connector(s) • Controller Area Network circuits • Sensor(s) • Engine control module (ECM) • Transmission control module

4. **4.** Verify the following systems are working correctly:

- Air intake system
- Cooling system
- Charging system
- Fuel charging system
- Ignition system

5. **5.** If an obvious cause for an observed or reported concern is found, correct the cause (if possible) before proceeding to the next step

• NOTE: If a DTC cannot be cleared, then there is a permanent fault present that flags again as soon as it is cleared. (The exception to this is P1260, which will only clear following an ignition **OFF/ON** cycle after rectification.)

6. **6.** If the cause is not visually evident and the Jaguar approved diagnostic system is not available, use a scan tool to retrieve the fault codes before proceeding to the diagnostic trouble code (DTC) index chart, or the symptom chart if no DTCs are set.

CAUTION: When probing connectors to take measurements in the course of the pinpoint tests, use the adaptor kit, part number 3548-1358-00.

• NOTE: When performing electrical voltage or resistance tests, always use a digital multimeter (DMM) accurate to 3 decimal places, and with an up-to-date calibration certificate. When testing resistance, always take the resistance of the DMM leads into account.

• NOTE: Check and rectify basic faults before beginning diagnostic routines involving pinpoint tests.

Symptom Chart

Symptom	Possible source	Action
Speed control inhibited or disabled	• Default mode enabled • Speed control switch(es) • Throttle sensors • Stop lamp switch	Check message center for default message. For speed control switch tests, GO to Pinpoint Test A., GO to Pinpoint Test B., and GO to Pinpoint Test D.. For throttle position sensor tests, REFER to Section 303-14 Electronic Engine Controls. Check electrical guides for stop light switch information.
Unable to regulate/adjust vehicle speed	• Steering wheel switch malfunction	For steering wheel switch tests, GO to Pinpoint Test B..
Unable to cancel speed control from steering wheel	• Steering wheel switch malfunction	For steering wheel switch tests, GO to Pinpoint Test B..
Unable to cancel speed control from brake pedal	• Brake cancel switch malfunction	For brake cancel switch tests, GO to Pinpoint Test D..

Driver Information Chart

• NOTE: Use this table to identify DTCs associated with the message centre display, then refer to the DTC index for possible sources and actions.

• NOTE: For definitions of Default Modes, see the foot of this table.

Warning light	Message	Default Mode	DTC
Red	Engine systems fault	Engine shut-down (all cylinders fuel cut)	P1224
Red	Engine systems fault	Limp-Home	P1229
Red	Engine systems fault	Limp-Home	P0121, P0122, P0123, P0222, P0223
Red	Engine systems fault	Limp-Home	P1251, P1631
Red	Engine systems fault	Limp-Home	P1611
Red	Engine systems fault	Limp-Home	P1633
Red	Engine systems fault	High idle	P1344, P1122, P1123, P1215, P1216
Red	Restricted Performance	Limp-Home unavailable	P1254
Red	Restricted Performance	Limp-Home unavailable	P1250
Red	Restricted Performance	Safety redundancy	P1657, P1658
Red	Restricted Performance	Safety redundancy	P1634
None	Cruise override	None	None. See principles of operation in this section
Red	Driver intervene	None	None. See principles of operation in this section
Amber	Cruise not available	None	P1571
Amber	Cruise not available	None	P0568
Amber	Cruise not available	None	P0567
Amber	Cruise not available	None	P0570
Amber	Cruise not available	None	P0569
Amber	Cruise not available	None	P0566
Amber	Cruise not available	None	P1697
Amber	Cruise not available	None	P1696
Amber	Restricted Performance	Engine speed limited	P0116, P0117, P0118, P0125
Amber	Restricted Performance	Engine speed limited	P0101, P0102, P0103, P0104
Amber	Restricted Performance	Engine speed limited	P0300, P0301, p0302, P0303, P0304, P0305, P0306, P0307, P0308, P1313, P1314

Warning light	Message	Default Mode	DTC
Amber	Restricted Performance	Engine speed limited	P0327, P0328, P0332, P0333, P1648
Amber	Restricted Performance	Engine speed limited	P0351, P0352, P0353, P0354, P0355, P0356, P0357, P0358, P1367, P1368
Amber	Restricted Performance	Engine speed limited	P0171, P0172, P0174, P0175
Amber	Restricted Performance	Engine speed limited	P0201, P0202, P0203, P0204, P0205, P0206, P0207, P0208
Amber	Restricted Performance	Engine speed limited	P0335, P0336
Amber	Restricted Performance	Engine speed limited, Reverse throttle progression enabled	P1642
Amber	Restricted Performance	Engine speed limited, Reverse throttle progression enabled	P1643
Amber	Restricted Performance	Engine speed limited, Reverse throttle progression enabled	P0096, P0097, P0098
Amber	Restricted Performance	Engine speed limited, Reverse throttle progression enabled	P1474
Amber	Restricted Performance	Engine speed limited	P1234, P1236, P1338

Default mode definitions

LIMP-HOME MODE

- Throttle motor off
- Throttle motor relay off
- Throttle motor circuit off
- Fuel intervention
- Cruise control inhibited

LIMP-HOME UNAVAILABLE

- Power limitation
- Vehicle speed limited to 120 kph
- Reverse throttle progression enabled
- Cruise Control Inhibited

REVERSE THROTTLE PROGRESSION

- Throttle opening limited to maximum 30%

• NOTE: The throttle operation uses the same map as for reverse gear.

ENGINE SPEED LIMITED

- Engine runs normally, up to 3000 RPM
- Engine speed restricted to 3000 RPM maximum, by fuel cut-off

HIGH IDLE

- Throttle valve kept in fixed position by motor
- Cruise Control Inhibited

SAFETY REDUNDANCY

- Power limitation
- Vehicle speed limited to 120 kph
- Reverse throttle progression enabled
- Cruise Control Inhibited

Diagnostic trouble code (DTC) index

DTC	Description	Possible Source	Action
P0566	Speed control **CANCEL** switch ON fault	• Speed control switches internal steering wheel circuit: short circuit to GROUND • Steering wheel cassette reel: short circuit to GROUND • Cassette reel to ECM circuit: short circuit to GROUND • **CANCEL** switch failure (stuck ON)	For switch circuit short to GROUND tests, GO to Pinpoint Test B. .
P0567	Speed control **RESUME** switch ON fault	• Speed control switches internal steering wheel circuit: short circuit to GROUND • Steering wheel cassette reel: short circuit to GROUND • Cassette reel to ECM circuit: short circuit to GROUND • **RESUME** switch failure (stuck ON)	For switch circuit short to GROUND tests, GO to Pinpoint Test B. .
P0568	Speed control input signal low/high resistance	• Speed control switches internal steering wheel circuit: open circuit, high resistance	For switch circuit tests, GO to Pinpoint Test C. .

DTC	Description	Possible Source	Action
		• Steering wheel cassette reel: open circuit, high resistance • Cassette reel to ECM circuit: open circuit, high resistance	
P0569	Speed control **Decel -** switch ON fault	• Speed control switches internal steering wheel circuit: short circuit to GROUND • Steering wheel cassette reel: short circuit to GROUND • Cassette reel to ECM circuit: short circuit to GROUND • **Decel -** switch failure	For switch circuit short to GROUND tests, GO to Pinpoint Test B. .
P0570	Speed control **SET / +** switch ON fault	• Speed control switches internal steering wheel circuit: short circuit to GROUND • Steering wheel cassette reel: short circuit to GROUND • Cassette reel to ECM circuit: short circuit to GROUND • **SET / +** switch failure (stuck ON)	For switch circuit short to GROUND tests, GO to Pinpoint Test B. .
P1571	Brake **ON / OFF** switch; brake cancel switch malfunction. (Note; Brake ON/OFF switch - normally open; brake cancel switch - normally closed)	• Brake ON/OFF switch to stop lamp relay circuit: open circuit • Stop lamp relay to ECM circuit: open circuit, short circuit to GROUND, high resistance • Brake **ON / OFF** switch ignition switched GROUND circuit: open circuit • Brake **ON / OFF** switch failure • Brake **CANCEL** switch to ECM circuit: open circuit, short circuit to GROUND, high resistance • Brake **CANCEL** switch power supply circuit: open circuit • Brake **CANCEL** switch failure	For brake switch circuit tests, GO to Pinpoint Test D.
P1696*	CAN ECM/ASCCM network malfunction	• CAN open circuit fault, ASCCM to ECM • CAN short circuit fault • ASCCM failure • ECM failure	*This is the adaptive speed control main DTC. If this DTC is not flagged, the fault is **NOT** with the adaptive system. For additional information on CAN diagnostics, REFER to Section 418-00 Module Communications Network.
P1697	Adaptive speed control **HEADWAY** switch(es) circuit malfunction	• Speed control switches internal steering wheel circuit: short circuit to GROUND, • Steering wheel cassette reel: short circuit to GROUND • Cassette reel to ECM circuit: short circuit to GROUND • **HEADWAY** switch(es) failure (stuck ON)	For HEADWAY switch circuit tests, GO to Pinpoint Test E. .
None	Forward alert switch malfunction	• Forward alert switch failure • Forward alert switch to ASCCM circuit short circuit to GROUND	For forward alert switch circuit tests, GO to Pinpoint Test A. .

Pinpoint Tests

PINPOINT TEST A : CHECK THE FORWARD ALERT SWITCH	
• NOTE: For a quick function check of the switch action, monitor the LED function as the switch is operated.	
TEST CONDITIONS	**DETAILS / RESULTS / ACTIONS**
A1: CHECK THE FORWARD ALERT SWITCH GROUND	
	1 Disconnect the forward alert switch electrical connector, FC102.
	2 Measure the resistance between FC102, pins 05 (B) and 06 (B) and GROUND.
	Is either resistance greater than 5 ohms? **Yes** REPAIR the high resistance circuit. For additional information, refer to the wiring diagrams. TEST the system for normal operation. **No** GO to A2.
A2: CHECK THE FORWARD ALERT SWITCH FUNCTION	
	1 Connect an ohmmeter across pins 04 and 05 of the forward alert switch
	2 Operate the switch.
	3 Measure the readings with the switch open and closed.

	Does the resistance switch between open circuit and closed circuit as the switch is operated? **Yes** GO to A3. **No** INSTALL a new forward alert switch. TEST the system for normal operation.
A3: CHECK THE FORWARD ALERT SWITCH TO ASCCM CIRCUIT FOR HIGH RESISTANCE	
	1 Disconnect the battery negative terminal.
	2 Disconnect the ASCCM electrical connector, LF61.
	3 Measure the resistance between FC102, pins 04 (YU) and 10 (YU) and LF61, pin 12 (YU).
	Is either resistance greater than 5 ohms? **Yes** REPAIR the high resistance circuit. For additional information, refer to the wiring diagrams. TEST the system for normal operation. **No** GO to A4.
A4: CHECK THE FORWARD ALERT SWITCH TO ASCCM CIRCUIT FOR SHORT CIRCUIT TO GROUND	
	1 Measure the resistance between FC102, pins 04 (YU) and 10 (YU) and GROUND.
	Is either resistance less than 10,000 ohms? **Yes** REPAIR the short circuit. For additional information, refer to the wiring diagrams. TEST the system for normal operation. **No** Contact dealer technical support for advice on possible ASCCM failure.

PINPOINT TEST B : DTC P0566, P0567, P0569, P0570: CHECK THE STEERING WHEEL SWITCHES FOR SHORT TO GROUND

TEST CONDITIONS	DETAILS/RESULTS/ACTIONS
B1: CHECK THE STEERING WHEEL SWITCH CIRCUIT FOR SHORT TO GROUND	
	1 Disconnect the ECM electrical connector, EM80.
	2 With the switches **NOT** operated, measure the resistance between EM80, pin 47 (YR) and GROUND.
	3 With the switches **NOT** operated, measure the resistance between EM80, pin 48 (YG) and GROUND.
	Is the resistance less than 10,000 ohms? **Yes** GO to B2. **No** No short circuit. Recheck DTCs. TEST the system for normal operation.
B2: CHECK THE STEERING WHEEL CASSETTE REEL FOR SHORT TO GROUND	
	1 Disconnect the cassette reel electrical connector, SW02.
	2 Measure the resistance between SW02, pin 03 and GROUND.
	3 Measure the resistance between SW02, pin 04 and GROUND.
	Is either resistance less than 10,000 ohms? **Yes** GO to B3. **No** No short circuit. Recheck DTCs. TEST the system for normal operation.
B3: CHECK THE STEERING WHEEL SWITCH TO ECM CIRCUITS FOR SHORT TO GROUND	
	1 Disconnect the cassette reel electrical connector, SW01.
	2 Measure the resistance between SW01, pin 03 (YG) and GROUND.
	3 Measure the resistance between SW01, pin 04 (YR) and GROUND.
	Is either resistance less than 10,000 ohms? **Yes** REPAIR the short circuit. For additional information, refer to the wiring diagrams. TEST the system for normal operation. **No** INSTALL a new switchpack. REFER to Section 211-04 Steering Column. CLEAR the DTC. TEST the system for normal operation.

PINPOINT TEST C : DTC P0568: SPEED CONTROL INPUT SIGNAL LOW/HIGH RESISTANCE

TEST CONDITIONS	DETAILS/RESULTS/ACTIONS
C1: CHECK THE INTERNAL STEERING WHEEL CIRCUIT FOR HIGH RESISTANCE, RESUME SWITCH CIRCUIT	
	1 Disconnect the cassette reel electrical connector, SW02.
	2 Connect an ohmmeter between SW02, pins 06 and 03.
	3 Operate the **RESUME** switch.
	Does the resistance switch between open circuit and 430 ohms as the switch is operated? (Non-adaptive).Does the resistance switch between open circuit and 680 ohms as the switch is operated? (Adaptive). **Yes** GO to C2. **No** INSTALL a new switchpack. REFER to Section 211-04 Steering Column. CLEAR the DTC. TEST the system for normal operation.
C2: CHECK THE INTERNAL STEERING WHEEL CIRCUIT FOR HIGH RESISTANCE, CANCEL SWITCH CIRCUIT	
	1 Operate the **CANCEL**switch.
	Does the resistance switch between open circuit and 680 ohms as the switch is operated? (Non-adaptive).Does the resistance switch between open circuit and closed circuit as the switch is operated? (Adaptive). **Yes** GO to C3. **No** INSTALL a new switchpack. REFER to Section 211-04 Steering Column. CLEAR the DTC. TEST the system for normal operation.
C3: CHECK THE INTERNAL STEERING WHEEL CIRCUIT FOR HIGH RESISTANCE, SET/+ SWITCH CIRCUIT	
	1 Connect an ohmmeter between SW02, pins 06 and 04.

	2 Operate the **SET / +** switch.
	Does the resistance switch between open circuit and 430 ohms as the switch is operated? (Adaptive and non-adaptive). **Yes** GO to C4. **No** INSTALL a new switchpack. REFER to Section 211-04 Steering Column. CLEAR the DTC. TEST the system for normal operation.
C4: CHECK THE INTERNAL STEERING WHEEL CIRCUIT FOR HIGH RESISTANCE, - SWITCH CIRCUIT	
	1 Operate the **-** switch.
	Does the resistance switch between open circuit and 680 ohms as the switch is operated? (Non-adaptive).Does the resistance switch between open circuit and closed circuit as the switch is operated? (Adaptive). **Yes** GO to C5. **No** INSTALL a new switchpack. REFER to Section 211-04 Steering Column. CLEAR the DTC. TEST the system for normal operation.
C5: CHECK THE STEERING WHEEL CASSETTE REEL FOR HIGH RESISTANCE	
	1 Disconnect the cassette reel electrical connector, SW01.
	2 Connect a bridge lead between SW02, pins 03 and 06.
	3 Measure the resistance between SW01, pins 03 and 06.
	4 Connect a bridge lead between SW02, pins 03 and 04.
	5 Measure the resistance between SW01, pins 03 and 04.
	Is either resistance greater than 5 ohms? **Yes** INSTALL a new cassette reel. REFER to Section 501-20A Safety Belt System / 501-20B Supplemental Restraint System. CLEAR the DTC. TEST the system for normal operation. **No** GO to C6.
C6: CHECK THE STEERING WHEEL CASSETTE REEL TO ECM CIRCUITS FOR HIGH RESISTANCE	
	1 Disconnect the battery negative terminal.
	2 Disconnect the ECM electrical connector, EM80.
	3 Measure the resistance between SW01, pin 03 (YG) and EM80, pin 48 (YG).
	4 Measure the resistance between SW01, pin 04 (YR) and EM80, pin 47 (YR).
	Is either resistance greater than 5 ohms? **Yes** REPAIR the high resistance circuit. For additional information, refer to the wiring diagrams. TEST the system for normal operation. **No** Contact dealer technical support for advice on possible ECM failure.

PINPOINT TEST D : DTC P1571: BRAKE ON/OFF SWITCH, BRAKE CANCEL SWITCH MALFUNCTION	
TEST CONDITIONS	**DETAILS/RESULTS/ACTIONS**
D1: CHECK THE POWER SUPPLY TO THE BRAKE CANCEL SWITCH	
	1 Disconnect the brake cancel switch electrical connector, AC24.
	2 Turn the ignition switch to the **ON** position.
	3 Measure the voltage between AC24, pin 03 (WU) and GROUND.
	Is the voltage greater than 10 volts? **Yes** GO to D2. **No** REPAIR the circuit between the brake cancel switch and battery. This circuit includes the driver's side fuse box, (fuse14) the ignition positive relay, and the high power protection module. For additional information, refer to the wiring diagrams. CLEAR the DTC. TEST the system for normal operation.
D2: CHECK THE BRAKE ON/OFF SWITCH TO STOP LAMP RELAY CIRCUIT FOR HIGH RESISTANCE	
	1 Remove the stop lamp relay.
	2 Measure the resistance between AC24, pin 01 (OG) and relay base, pin 02.
	Is the resistance greater than 5 ohms? **Yes** REPAIR the high resistance circuit. For additional information, refer to the wiring diagrams. CLEAR the DTC. TEST the system for normal operation. **No** GO to D3.
D3: CHECK THE STOP LAMP RELAY TO ECM CIRCUIT FOR HIGH RESISTANCE	
	1 Disconnect the battery negative terminal.
	2 Disconnect the ECM electrical connector, EM80.
	3 Measure the resistance between EM80, pin 08 (U) and the relay base, pin 05.
	Is the resistance greater than 5 ohms? **Yes** REPAIR the high resistance circuit. For additional information, refer to the wiring diagrams. CLEAR the DTC. TEST the system for normal operation. **No** GO to D4.
D4: CHECK THE STOP LAMP RELAY TO ECM CIRCUIT FOR SHORT TO GROUND	
	1 Reconnect the battery negative terminal.
	2 Measure the resistance between EM80, pin 08 (U) and GROUND.
	Is the resistance less than 10,000 ohms? **Yes** REPAIR the short circuit. For additional information, refer to the wiring diagrams. CLEAR the DTC. TEST the system for normal operation. **No** GO to D5.
D5: CHECK THE BRAKE ON/OFF SWITCH IGNITION SWITCHED GROUND	
	1 Turn the ignition switch to the **ON** position.

	2 Measure the resistance between AC24, pin 04 (WU) and GROUND.
	Is the resistance greater than 5 ohms? **Yes** REPAIR the high resistance circuit. For additional information, refer to the wiring diagrams. CLEAR the DTC. TEST the system for normal operation. **No** GO to D6.
D6: CHECK THE BRAKE CANCEL SWITCH TO ECM CIRCUIT FOR HIGH RESISTANCE	
	1 Measure the resistance between AC24, pin 02 (U) and EM80, pin 09.
	Is the resistance greater than 5 ohms? **Yes** REPAIR the high resistance circuit. For additional information, refer to the wiring diagrams. CLEAR the DTC. TEST the system for normal operation. **No** GO to D7.
D7: CHECK THE BRAKE CANCEL SWITCH TO ECM CIRCUIT FOR SHORT TO GROUND	
	1 Measure the resistance between AC24, pin 02 (U) and GROUND.
	Is the resistance less than 10,000 ohms? **Yes** REPAIR the short circuit. For additional information, refer to the wiring diagrams. CLEAR the DTC. TEST the system for normal operation. **No** INSTALL a new brake switch assembly. CLEAR the DTC. TEST the system for normal operation.

PINPOINT TEST E : DTC P1697: ADAPTIVE SPEED CONTROL HEADWAY SWITCH(ES) CIRCUIT MALFUNCTION	
TEST CONDITIONS	**DETAILS/RESULTS/ACTIONS**
E1: CHECK THE SPEED CONTROL HEADWAY - SWITCH FUNCTION	
	1 Disconnect the steering wheel internal harness electrical connector, SW02.
	2 Connect an ohmmeter between SW02, pins 04 (YR) and 06 (BO).
	Does the resistance switch between open circuit and 680 ohms when the **HEADWAY -** switch is operated? **Yes** GO to E2. **No** INSTALL a new speed control switchpack. REFER to Speed Control Switch - in this section. CLEAR the DTC. TEST the system for normal operation.
E2: CHECK THE SPEED CONTROL HEADWAY + SWITCH FUNCTION	
	1 Connect an ohmmeter between SW02, pins 03 (YG) and 06 (BO).
	Does the resistance switch between open circuit and 430 ohms when the **HEADWAY +** switch is operated? **Yes** GO to E3. **No** INSTALL a new speed control switchpack. REFER to Speed Control Switch - in this section. CLEAR the DTC. TEST the system for normal operation.
E3: CHECK THE SPEED CONTROL INTERNAL HARNESS FOR SHORT CIRCUIT TO GROUND	
	1 Measure the resistance between SW02, pin 04 (YR) and GROUND.
	2 Measure the resistance between SW02, pin 03 (YG) and GROUND.
	Is either resistance less than 10,000 ohms? **Yes** REPAIR the short circuit. For additional information, refer to the wiring diagrams. CLEAR the DTC. TEST the system for normal operation. **No** Check the steering wheel cassette reel for short circuit to ground. GO to Pinpoint Test B. test 2. (The cassette reel is the same for adaptive and non-adaptive vehicles).

Published: 11-May-2011

Speed Control - Speed Control Module Alignment

General Procedures

Special Tool(s)	
E31844	Inclinometer 501-F007

• NOTE: Make sure the vehicle is positioned on level ground such as the headlamp alignment area.

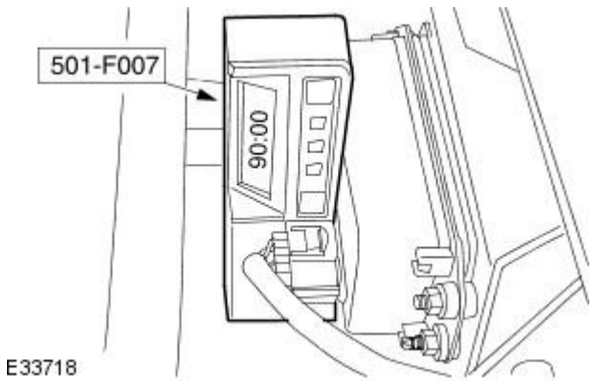

1. Using the special tool, check the speed control module vertical alignment.

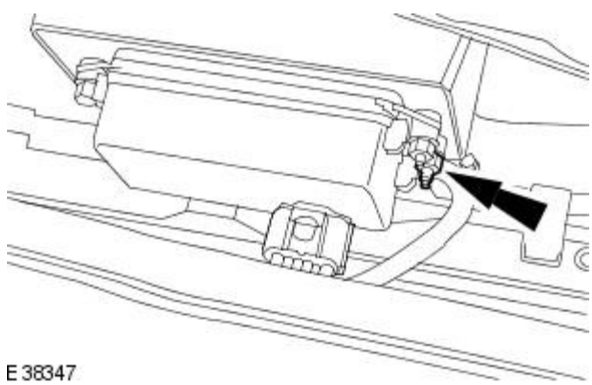

2. Align the speed control module.

- Rotate the speed control module alignment bolt to achieve a reading of 90° ± 0.75°.

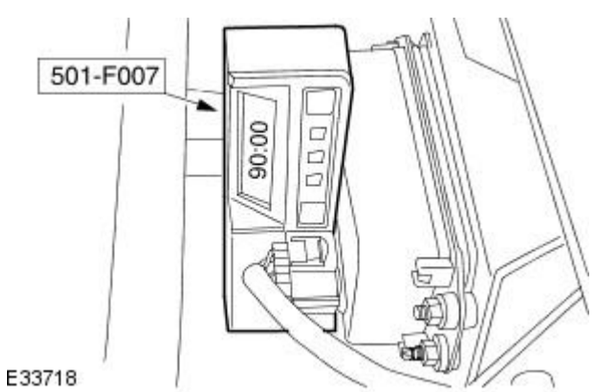

3. Using the special tool, check the speed control module vertical alignment.

Speed Control - Speed Control Module

Removal and Installation

Removal

1. Disconnect the battery ground cable. For additional information, refer toSection 414-01 Battery, Mounting and Cables.
2. Remove the hood. For additional information, refer toSection 501-03 Body Closures.
3. Disconnect the speed control module electrical connector.

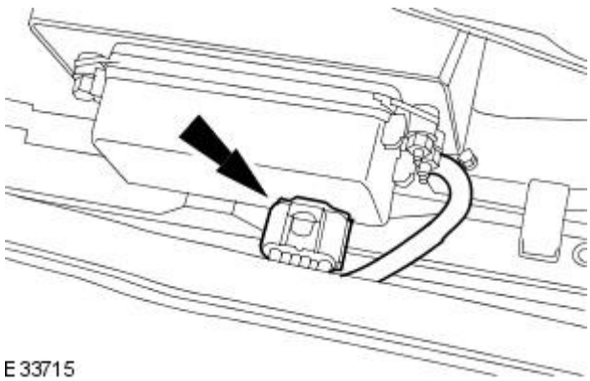

E33715

4. Remove the speed control module.

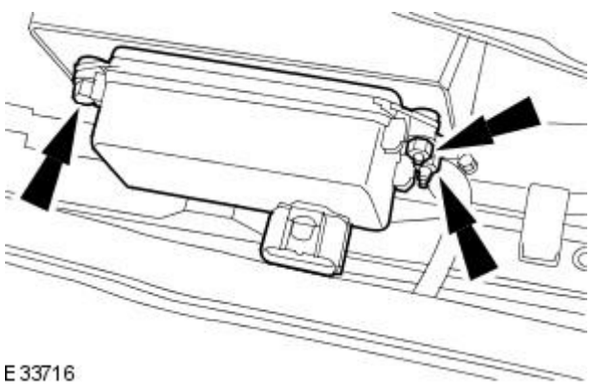

E33716

Installation

1. Adjust the speed control module alignment bolt shoulder to mounting bracket clearance to 1.5mm.

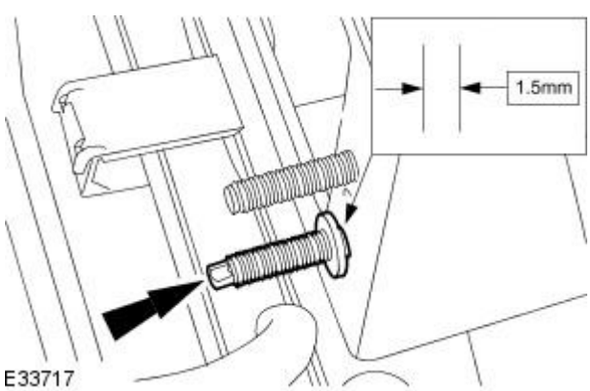

E33717

2. Install the speed control module.
   - Tighten to 5 Nm.

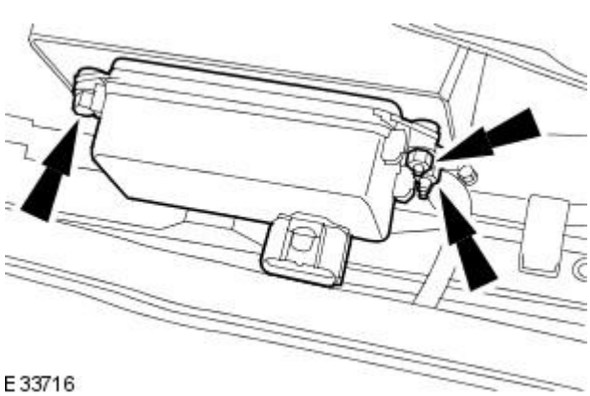

E33716

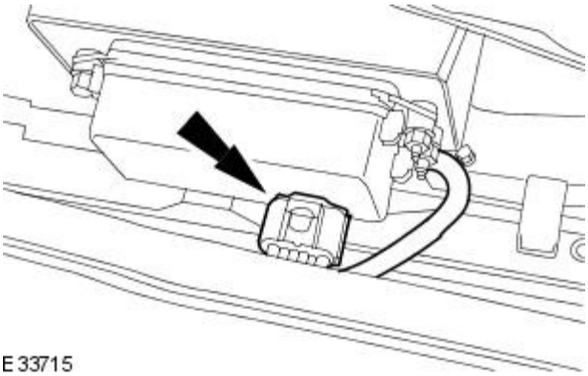

3. Connect the speed control module electrical connector.

4. Check and adjust the speed control module alignment.
   For additional information, refer to Speed Control Module Alignment in this section.
5. Install the hood. For additional information, refer toSection 501-03 Body Closures.
6. Carry out the battery reconnection procedure. For additional information, refer toSection 414-01 Battery, Mounting and Cables.
7. Initialize the system. For additional information, refer to the Jaguar approved diagnostic system.

Climate Control System - General Information -

Lubricants, Fluids, Sealers and Adhesives

Description	Specification
Air conditioning refrigerant	HFC 134a
Air conditioning compressor oil	ND 8

Capacities

Description	Grammes
Air conditioning refrigerant	650 (+/- 25)

Refrigerant Oil Adding Capacities

Item	Milliliters
Condenser core	Add 33
Evaporator	Add 46
Air conditioning (A/C) compressor - If the quantity of oil taken from the compressor is less than 90 ml	Add 90
Air conditioning (A/C) compressor - If the quantity of oil taken from the compressor is between 90 ml and 200 ml	Add up to a maximum of 200
Air conditioning (A/C) compressor - If the quantity of oil taken from the compressor is greater than 200 ml	Add 200
Air conditioning lines - If air conditioning has been operational	Add 10 per line

Published: 11-May-2011

Climate Control System - General Information - Climate Control System

Description and Operation

The purpose of the air distribution system is to route air to the designated registers. This is accomplished when air enters the plenum and is directed to the desired ducts by the use of air distribution doors.

The air distribution system contains the heater core and evaporator core, blower motor and distribution doors. All of the air is mixed and distributed from the plenum assembly depending on the distribution door positions.

For additional information, refer to Section 412-01 Air Distribution and Filtering.

Heating/Defrosting

The heating system is a water valve controlled system. The ambient air is passed through the cabin air filter, directed through and/or around the heater core and evaporator core, mixed and distributed from the plenum assembly to the floor, instrument panel and/or the defrost ducts as desired.

For additional information, refer to Section 412-02 Heating and Ventilation.

Heater Core and Evaporator core

The heater core consists of a number of fins and tubes in an arrangement to extract heat from the engine coolant and transfer the heat to the air that passes through the heater core. The evaporator core is a plate/fin type arrangement.

For additional information, refer to Section 412-03 Air Conditioning.

Air Conditioning Line Peanut Fitting

Peanut Fitting Assembly

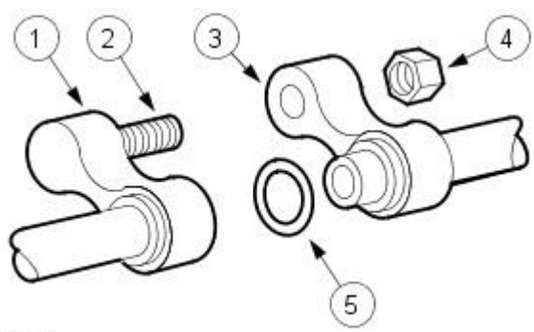

E30131

Item	Part Number	Description
1	-	Female air conditioning line.
2	-	Stud.
3	-	Male air conditioning line.
4	-	Retaining nut.
5	-	O-ring seal.

The connections between the air conditioning (A/C) condensor core/receiver drier and the connections between the lines use peanut fittings.

- The male and female line of the peanut fitting are retained with a nut.
- An O-ring seal is installed around the tube on the male line.
- Support the female line with a wrench to prevent the twisting of the tubes.
- When correctly assembled, the mating surfaces of the male and female fittings should be flush.

Blower motors

The blower motors pull air from the air inlet and forces it into the plenum assembly where it is mixed and distributed. The blower motors will not operate if the system is in AUTO mode and the engine temperature is low. The blower motor speeds are adjusted by turning the rotary switch clockwise to increase the motor speeds and by turning the rotary switch counter-clockwise will decrease the blower motor speeds. The blower motors have eleven speeds.

Air conditioning refrigerant

The R-134a air conditioning system uses a hydrofluorocarbon (HFC) non-CFC based refrigerant. R-134a requires the use of Jaguar compressor oil or equivalent meeting Jaguar specification. Do not use R-12 tools and equipment when repairing an R-134a system unless specified in the workshop manual. Never mix R-12 and R-134a refrigerants and oils. They are not compatible.

Air Conditioning (A/C) System

The air conditioning (A/C) system is a multi-piece, single case design, with an integral blower motor. The system allows the operator to control the temperature by delivering heated or cooled air to maintain a constant temperature. In addition, during A/C operation, it reduces the relative humidity of air inside the vehicle. Controls are provided to adjust the temperature and system functions, including blower motor speeds for desired airflow. Ambient air is passed through during all system operations except for MAX A/C cooling (when recirculated air is used) and OFF. For additional information, refer to Section 412-03 Air Conditioning.

Control System Inputs

The climate control system inputs can be selected from the climate control assembly which offers either AUTO or manual control (MODE).

Control System Outputs

The air inlet, air distribution and air temperature blend doors are all controlled by electronic actuators.

Published: 11-May-2011

Climate Control System - General Information - Climate Control System

Diagnosis and Testing

• NOTE: All air conditioning (A/C) related tests should be run in an ambient temperature of at least 10°C (50°F).

1. **1.** Verify the customer concern by operating the system.
2. **2.** Visually inspect for obvious signs of mechanical or electrical damage.
3. **3.** Listen for any unusual noises during climate control system operation.
4. **4.** Inspect the air conditioning (A/C) system with an ultraviolet (UV) lamp for traces of UV sensitive leak trace dye.

Visual Inspection Chart

Mechanical	Electrical
• Coolant level • Refrigerant (UV lamp) • Drive belt • Control flap(s) • Duct(s) • Register(s) • Cabin air filter • Hose(s) • Dual coolant flow valve • Auxilliary coolant flow pump • Water pump	• Fuse(s) • Circuit • Blower motors • Electrical connector(s) • Compressor • Cooling fan • Actuators • Climate control assembly • Dual coolant flow valve • Auxilliary coolant flow pump

5. **5.** If an obvious cause for an observed or reported concern is found, correct the cause (if possible) before proceeding to the next step.
6. **6.** If the cause is not visually evident, verify the symptom and refer to the Jaguar Approved Diagnostic System.

Published: 11-May-2011

Climate Control System - General Information - Air Conditioning (A/C) System Flushing

General Procedures

1. WARNINGS:

Prior to using air conditioning (A/C) system flushing equipment for the first time, follow the operating instructions. Failure to follow this instruction may result in personal injury.

Use extreme care and observe all safety precautions related to the use of refrigerants. Due to refrigerant hazards, always wear safety goggles and non-penetrable gloves when working on or flushing the (A/C) system. Failure to follow this instruction may result in personal injury.

When flushing the A/C system, refer to the manufacturers equipment instructions. Failure to follow this instruction may result in system damage or personal injury.

• CAUTIONS:

The A/C refrigerant analyzer must be used before the recovery of any vehicles A/C refrigerant. Failure to do so puts workshop bulk refrigerant at risk of contamination. If the vehicle A/C refrigerant is contaminated, refer the customer to return to the repair facility that performed the last A/C repair. If the customer wishes to pay the additional cost, use the A/C recovery equipment that is designated for recovering contaminated A/C refrigerant. All contaminated A/C refrigerant must be disposed of as hazardous waste. For additional information, refer to the manufacturers equipment instructions. Failure to follow this instruction may result in damage to the vehicle.

Prior to flushing, depending on the equipment used other A/C components may have to be removed prior to flushing. For additional information, refer to the manufacturers equipment instructions before flushing the A/C system. Failure to follow this instruction may result in damage to the vehicle.

Recover the refrigerant.
For additional information, refer to Air conditioning (A/C) System Recovery, Evacuation and Charging in this section.

2. Flush the system. For additional information, refer to the manufacturers equipment instructions.

3. Install new air conditioning components if blocked with debris.
For additional information, refer to Section 412-03 Air Conditioning.

4. Add the required amount of oil to the A/C system depending on the repair procedure.
For additional information, refer to Refrigerant Oil Adding in this section.

5. Evacuate and charge the A/C system.
For additional information, refer to Air conditioning (A/C) System Recovery, Evacuation and Charging in this section.

6. Check the A/C system for correct operation.

Climate Control System - General Information - Air Conditioning (A/C) System Recovery, Evacuation and Charging

General Procedures

1. WARNING: Jaguar Cars Limited, recommend the use of a charging station to carry out recover, evacuation and charging of the refrigerant system. Follow the manufacturers equipment procedures and instructions. Failure to follow this instruction may result in personal injury.

• CAUTIONS:

The air conditioning (A/C) refrigerant analyzer must be used before the recovery of any vehicles A/C refrigerant. Failure to do so puts workshop bulk refrigerant at risk of contamination. If the vehicle A/C refrigerant is contaminated, refer the customer to return to the repair facility that carried out the last A/C repair. If the customer wishes to pay the additional cost, use the A/C recovery equipment that is designated for recovering contaminated A/C refrigerant. All contaminated A/C refrigerant must be disposed of as hazardous waste. For all equipment, follow the manufacturers equipment procedures and instructions. Failure to follow this instruction may result in personal injury.

Do not add R-12 refrigerant to an A/C system that requires the use of R-134a refrigerant. These two types of refrigerant should never be mixed. Doing so may cause damage to the A/C system. Failure to follow this instruction may result in damage to the vehicle.

Connect the charging station. For additional information, refer to the manufacturers equipment instructions.

2. Recover the refrigerant. For additional information, refer to the manufacturers equipment instructions.

3. Carry out the required repair procedure.
For additional information, refer to Section 412-03 Air Conditioning.

4. Add the required amount of oil to the A/C system depending on the repair procedure.
For additional information, refer to Refrigerant Oil Adding in this section.

5. Evacuate the A/C system. For additional information, refer to the manufacturers equipment instructions.

6. Check the A/C system for sufficient vacuum. For additional information, refer to the manufacturers equipment instructions.

7. Charge the A/C system with the correct amount of refrigerant.
For additional information, refer to Specification - in this section.

8. Check the A/C system for correct operation.

9. Carry out flourescent dye leak detection test.
For additional information, refer to Flourescent Dye Leak Detection in this section.

Climate Control System - General Information - Contaminated Refrigerant Handling

General Procedures

1. If contaminated refrigerant is detected DO NOT recover the refrigerant into your R-134a OR R-12 recovery/recycling equipment. Take the follow actions:

1. Repeat the test to verify contaminated refrigerant is present.
2. Advise the customer of the contaminated A/C system and any additional cost to repair the system. The customer may wish to return to the repair facility performing the last A/C repair.
3. Recover the contaminated refrigerant using suitable recovery only equipment designed for capturing and storing contaminated refrigerant. This equipment must only be used to recover contaminated refrigerant to prevent the spread to other vehicles. As an alternative, contact an A/C repair facility in your area with the proper equipment to perform the repair.
4. On completion of the recovery of the contaminated refrigerant, it will be necessary to carry out the A/C system flushing procedure.
   For additional information, refer to Air Conditioning (AC) System Flushing in this section.

Climate Control System - General Information - Electronic Leak Detection

General Procedures

1. WARNING: Good ventilation is necessary in the area where A/C leak testing is to be carried out. If the surrounding air is contaminated with refrigerant gas, the leak detector will indicate this gas all the time. Odors from other chemicals such as antifreeze, diesel fuel, disc brake cleaner, or other cleaning solvents can cause the same problem. A fan, even in a well ventilated area, is very helpful in removing small traces of contamination from the air that might affect the leak detector. Failure to follow this instruction may result in personal injury.

Attach an R-134a manifold gauge set or use a UL-approved recovery/recycling device such as an R-134a A/C refrigerant center (which meets SAE Standard J 1991). For additional information, refer to the manufacturers equipment instructions.

- Both gauges should indicate 413-551 kPa (60-80 psi) at 24°C (75°F) with the engine off.
- If little or no pressure is indicated, carry out the air conditioning (A/C) system recovery, evacuation and charging procedure.
  For additional information, refer to Air Conditioning (AC) System Recovery, Evacuation and Charging in this section.

2. Use an R134-a Automatic calibration halogen leak detector to leak test the refrigerant system. For additional information, refer to the manufacturers equipment instructions.

3. If a leak is found, carry out the air conditioning (A/C) system recovery procedure.
For additional information, refer to Air Conditioning (AC) System Recovery, Evacuation and Charging in this section.

Climate Control System - General Information - Fluorescent Dye Leak Detection

General Procedures

1. WARNING: Eye protection glasses supplied with the ultraviolet (UV) lamp should be used to protect eyesight from harm.

• NOTE: The air conditioning (A/C) system has an R-134a leak trace dye incorporated into the A/C system. The exact location of leaks can be pinpointed by the bright yellow/green glow of the tracer dye. Since more than one leak may exist, always inspect each component. If it is necessary to add dye (due to a severe leakage for example) use proprietary tracer dye injection equipment.

Check for leaks using ultraviolet (UV) lamp.

2. Check all components, fittings and lines of the A/C system.

3. Carry out the repair. For additional information, refer to Section 412-03 Air Conditioning.

4. After the leak is repaired, remove any traces of leak trace dye with a general purpose oil solvent.

5. Check the A/C system for correct operation.

6. Verify the repair by operating the system for a short time and inspecting with the (UV) lamp.

Climate Control System - General Information - Inspection and Assembly Requirements

General Procedures

1. Check for leaks using ultraviolet (UV) Lamp.
For additional information, refer to Flourescent Dye Leak Detection in this section.

2. NOTE: Any time a hose or component connection leak is observed, the component and fitting must be separated, cleaned and a new O-ring fitted and lubricated with air conditioning compressor oil.
For additional information, refer to Specifications in this section.

• NOTE: When separating A/C joints, cap the open connections immediately. Do not leave open to atmosphere.

O-ring seal surfaces must be free of dirt, lint, burrs and scratches. The O-ring and connector should be lubricated with air conditioning compressor oil.
For additional information, refer to Specifications in this section.

Published: 11-May-2011

Climate Control System - General Information - Manifold Gauge Set Connection

General Procedures

1. WARNINGS:

Use extreme care and observe all safety precautions related to the use of refrigerants. Failure to follow this instruction may result in personal injury.

For additional information, refer to the manufacturers equipment instructions. Failure to follow this instruction may result in personal injury and system damage.

Install the manifold gauge set. For additional information, refer to the manufacturers equipment instructions.

2. Carry out the repair.

3. Remove the manifold gauge set. For additional information, refer to the manufacturers equipment instructions.

4. Carry out flourescent dye leak detection test.
For additional information, refer to Flourescent Dye Leak Detection in this section.

5. Check air conditioning (A/C) system for correct operation.

Published: 11-May-2011

Climate Control System - General Information - Refrigerant Oil Adding

General Procedures

• NOTE: When separating air conditioning (A/C) connections, cap the open connections immediately. Do not leave open to the atmosphere.

1. A new replacement A/C compressor contains no refrigerant oil.

- When replacing components of the air conditioning refrigerant system, add oil to the replacement components.
  For additional information, refer to Specifications in this section.
- If evidence of a leak is found, source of the leak is to be rectified.

Climate Control System - General Information - Refrigerant System Tests

General Procedures

1. WARNINGS:

Use extreme care and observe all safety precautions related to the use of refrigerants. Failure to follow this instruction may result in personal injury.

The A/C refrigerant analyzer must be used before the recovery of any vehicle's A/C refrigerant. Failure to do so puts shop bulk refrigerant at risk of contamination. If the vehicle A/C refrigerant is contaminated, refer the customer to return to the repair facility that carried out the last A/C repair. If the customer wishes to pay the additional cost, use the A/C recovery equipment that is designated for recovering contaminated A/C refrigerant. All contaminated A/C refrigerant must be disposed of as hazardous waste. For all equipment, follow the equipment manufacturers procedures and instructions. Failure to follow this instruction may result in personal injury.

• NOTE: Jaguar Cars Ltd. supports the efficient usage, recovery and recycling of the refrigerant used in passenger car air conditioners. Jaguar Cars Ltd. recommends the use of UL-approved recovery/recycling device such as R-134a A/C refrigerant center (which meets SAE Standard J 1991) during any A/C system repair and recharge procedure which requires that the system be evacuated.

Use R-134a A/C Refrigerant Centre to evacuate and recover the A/C system.

- Follow the equipment manufactures procedures and instructions for use of equipment.

Published: 11-May-2011

Air Distribution and Filtering - Air Distribution and Filtering

Description and Operation

Air Distribution

Outside air enters the plenum via two inlets in the lower finisher at the base of the windshield.

If the air conditioning system is operating in FRESH mode (not recirculation mode), then air is drawn through an air particle filter (where fitted) and into the air conditioning unit via the blower interconnecting ducts in the LH and RH blower assemblies. Air is cooled and dehumidified as it passes through the evaporator and is then 'reheated' to the required temperature as it passes through the heater matrix.

In RECIRCULATION mode, the air in the passenger compartment is drawn into the air conditioning unit via the recirculation air inlets on the blower assemblies.

In FRESH mode, air flows from the cabin into the trunk via extraction slots in the rear parcel shelf at the base of the backlight on the Coupe and the hood containment panel on Convertible. The air is exhausted from the vehicle through extraction vent assemblies (incorporating one way flaps) whose outlets are above the rear mufflers.

Air Flow Path

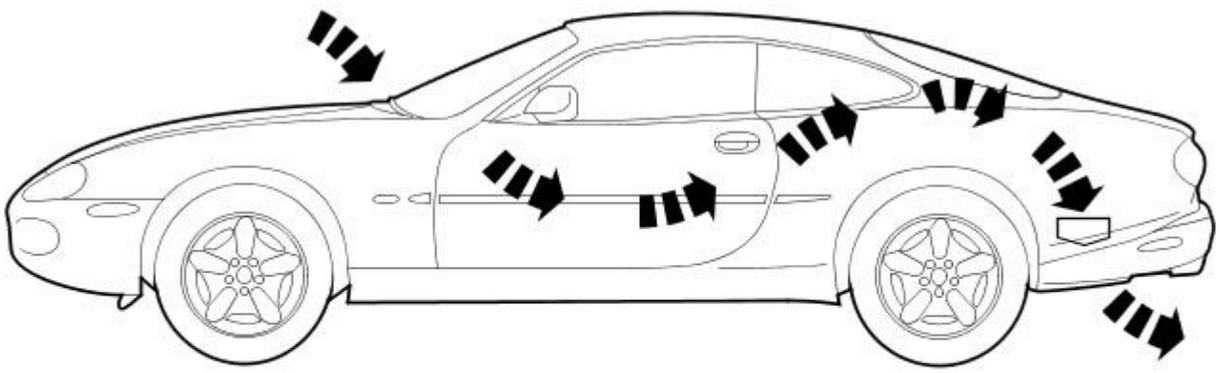

E34325

Air Distribution Modes

Bi-level mode. Minimum temperature differential.

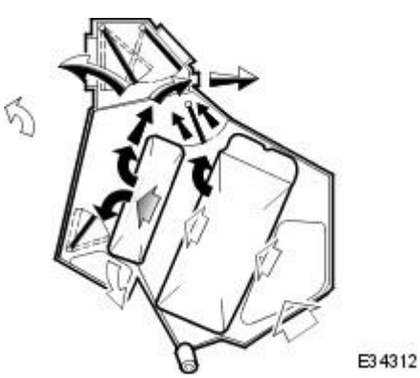

E34312

Bi-level mode. Maximum temperature differential.

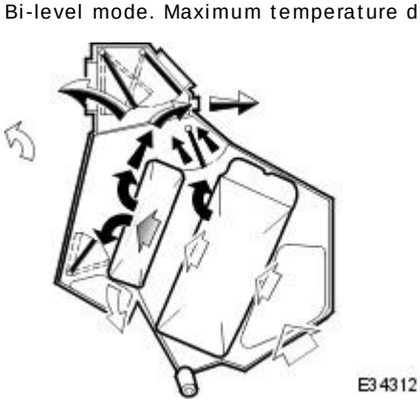

E34312

Foot / defrost mode.

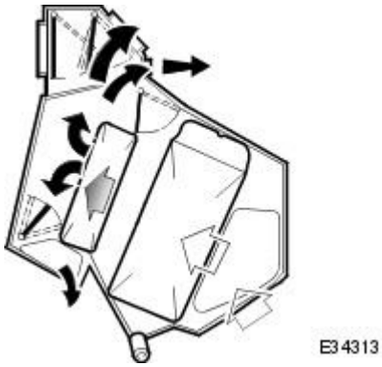

Face mode.

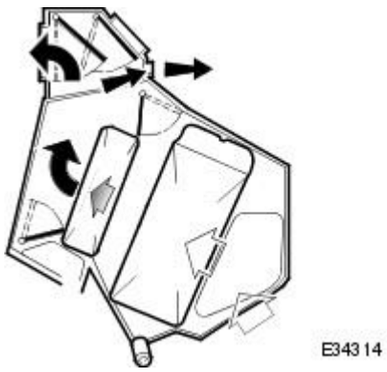

Defrost mode.

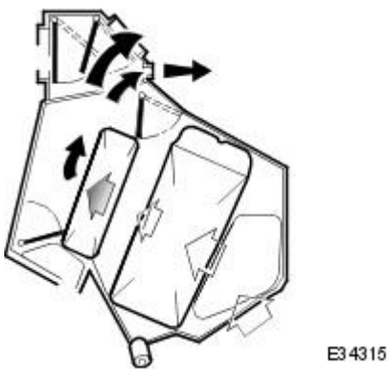

Foot mode.(with automatic air bleed to the windshield)

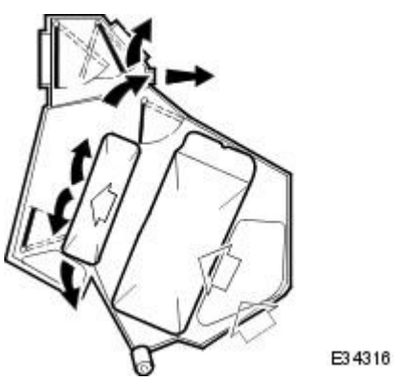

Air Particle Filter (Rain deflector removed for clarity)

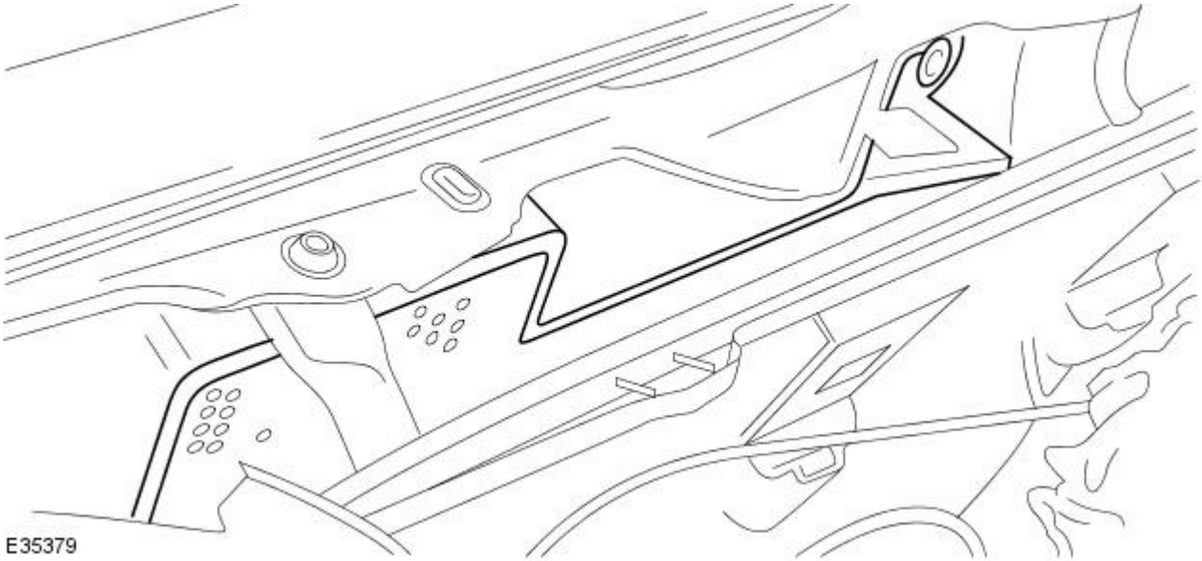

The air particle filter system (where fitted) is located in the 'wet' plenum below the windshield finisher.

The filter element is retained by clips which are moulded onto the filter housing. Please note that the filter must be fitted with the light, flocked surface, towards the engine.

LADD and Footwell Ducts

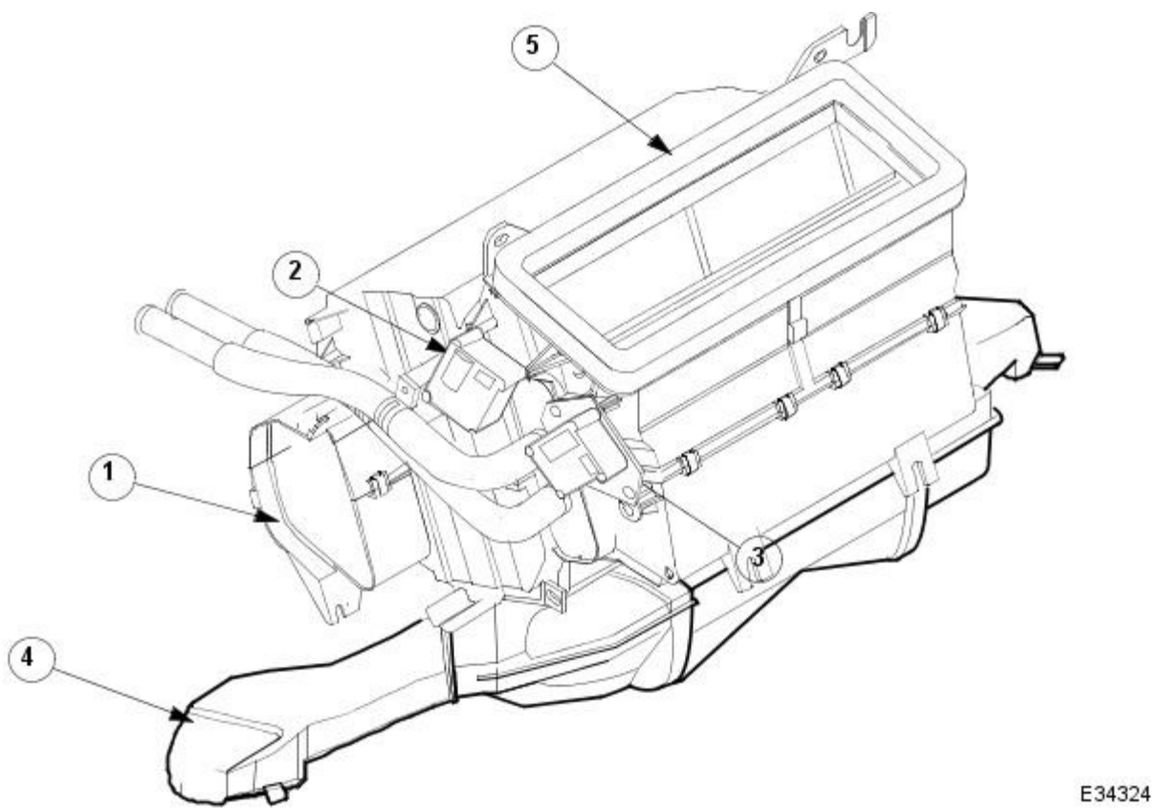

Air Distribution Box (ADB)

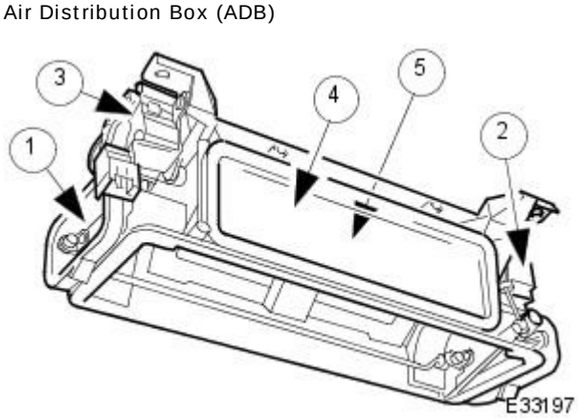

Parts List

Item	Part Number	Description
1	—	Air outlet - EOD vent
2	—	Servomotor - center fascia vent
3	—	Servomotor - windshield

4	—	Air outlet - fascia center
5	—	Air outlet - windshield

The upper air distribution box ADB, is fixed to the defrost duct and facia assembly, and seals by contact pressure to the outlet (top) of the air conditioning unit. The ADB incorporates two servo motor operated flaps which regulate airflow to:

- Windshield and door drop glass
- Fascia center and end of dash (EOD) vents

Air is ducted from the ADB to the fascia air outlet vents. The center vent duct incorporates a baffle plate which balances the volume of airflow between the center and EOD vents.

Internal Components and Air Flow

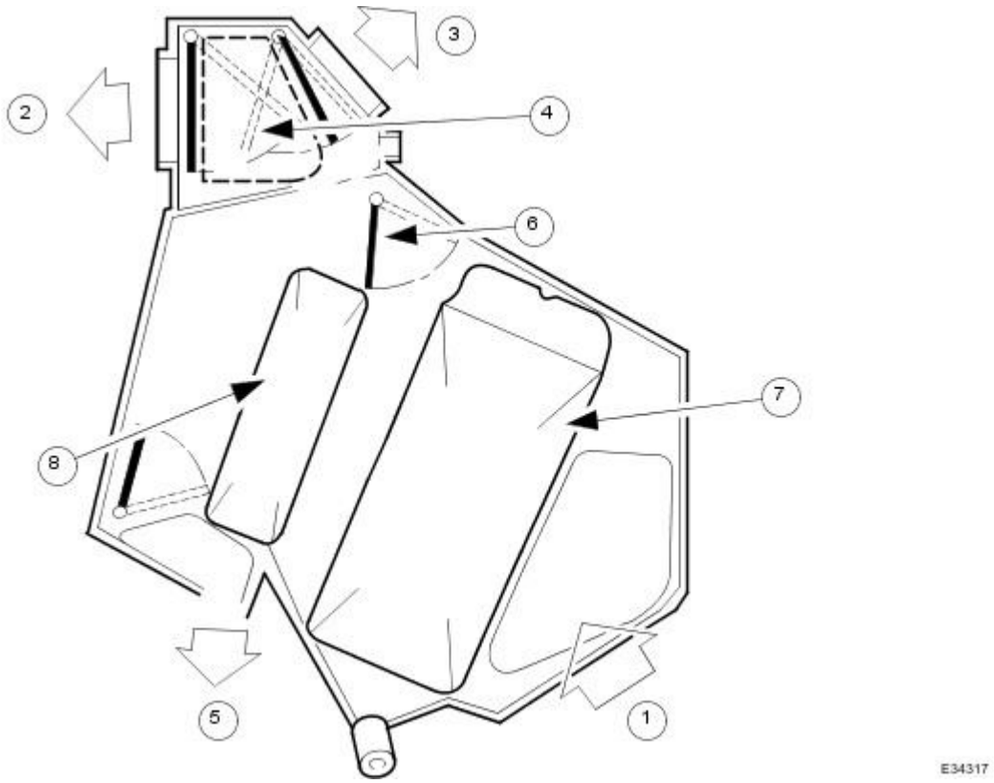

Parts List

Item	Part Number	Description
1	—	Air inlet - from RH blower (LH opposite, not shown)
2	—	Air outlet - fascia center vent
3	—	Air outlet - defrost
4	—	Air outlet - EOD 1LH and 1RH
5	—	Air outlet - footwell
6	—	Flap - cool air bypass
7	—	Evaporator
8	—	Matrix - heater

Published: 11-May-2011

Air Distribution and Filtering - Air Distribution and Filtering

Diagnosis and Testing

Refer to Section 412-00.

Air Distribution and Filtering - Center Registers

Removal and Installation

Removal

1. Remove battery cover and disconnect ground cable from battery terminal. Refer to 86.15.19.
2. Using a thin plastic lever, carefully remove fascia centre veneer panel from fascia. Refer to 76.47.06
3. Remove glove box. Refer to 76.52.03.
4. Accessing through glove box aperture, disconnect fascia centre vent harness multiplug.

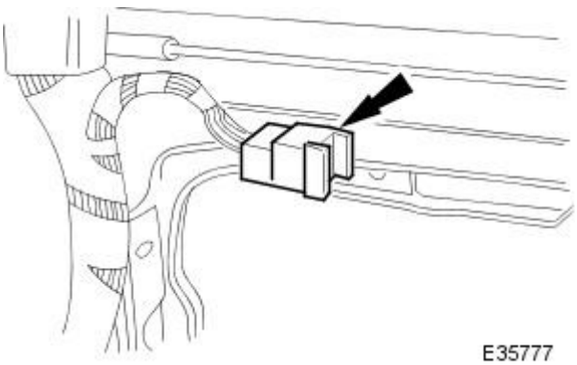

5. Exercising care to avoid damaging surfaces, use a thin plastic lever to release centre vent dowels from fascia.

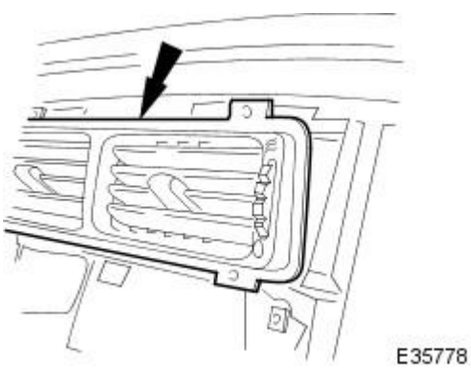

6. Positioning vent for access, move vent lead and multiplug clear of fascia harness and remove vent from fascia.

Installation

1. Position centre vent at fascia and route harness multiplug to fascia location.
2. Finally position vent and fully seat dowels in fascia.
3. Accessing through glovebox aperture, connect centre vent multiplug to fascia harness.
4. Fit and fully seat centre vent veneer panel. Refer to 76.47.06.
5. Fit glovebox. Refer to 76.52.03.
6. Connect ground cable to battery terminal and fit battery cover. Refer to 86.15.15.

Air Distribution and Filtering - Driver Side Blower Motor

Removal and Installation

Removal

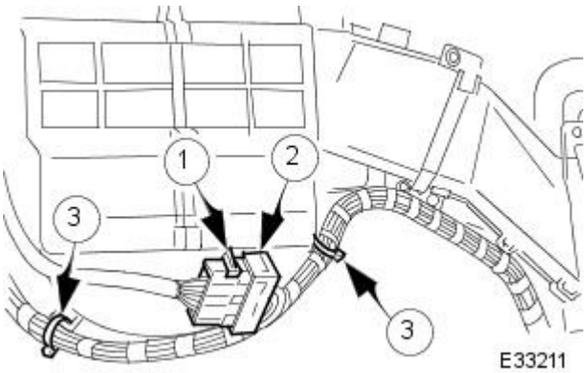

1. Remove the steering column.
For additional information, refer to: Steering Column (211-04 Steering Column, Removal and Installation).

2. Remove the driver side footwell duct.

3. Disconnect the driver side blower motor electrical connector.

1. Detach the driver side blower motor electrical connector.
2. Remove and discard the cable ties.
3. Disconnect the driver side blower motor electrical connector.

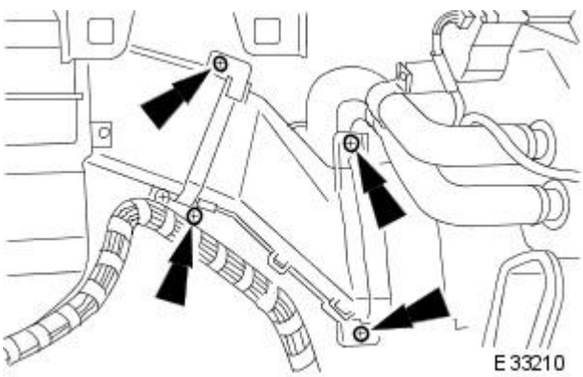

4. Remove the driver side blower motor duct.

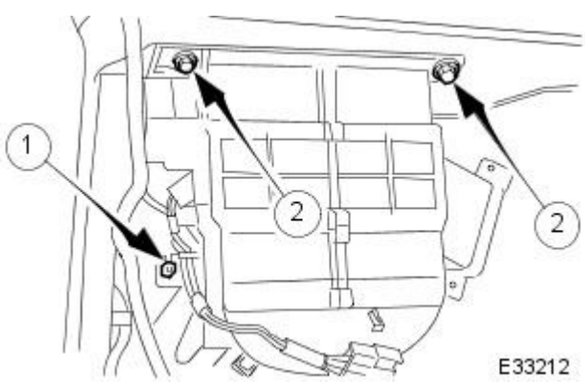

5. Remove the driver side blower motor.

1. Loosen the nut.
2. Loosen the bolts.

Installation

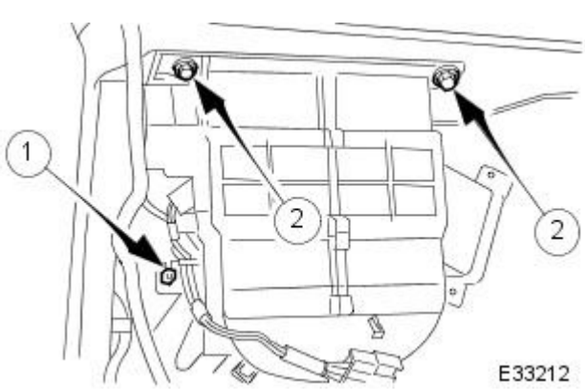

1. To install, reverse the removal procedure.

1. Tighten to 6 Nm.
2. Tighten to 6 Nm.

Air Distribution and Filtering - Passenger Side Blower Motor

Removal and Installation

Removal

1. Remove the instrument panel.
For additional information, refer to: Instrument Panel (501-12 Instrument Panel and Console, Removal and Installation).

2. Remove the passenger side footwell duct.

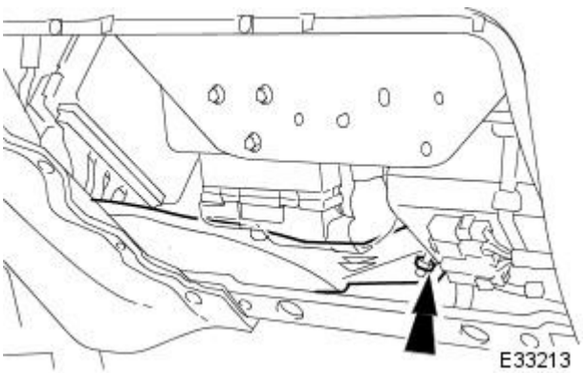

3. Disconnect the passenger side blower motor electrical connector.

1. Detach the passenger side blower motor electrical connector.
2. Remove and discard the cable ties.
3. Disconnect the passenger side blower motor electrical connector.

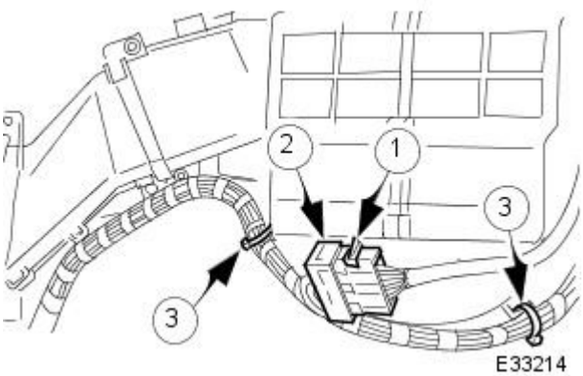

4. Detach the passenger side blower motor duct.

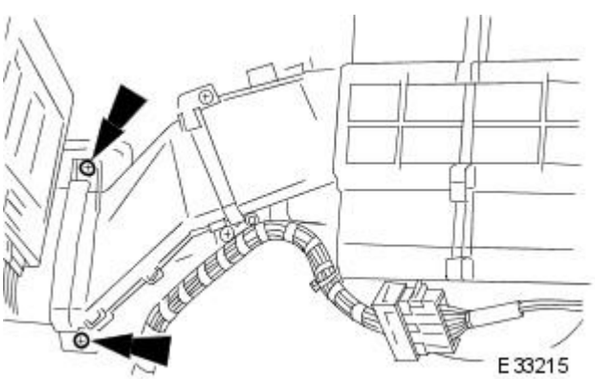

5. Remove the passenger side blower motor duct.

- Remove the screws.

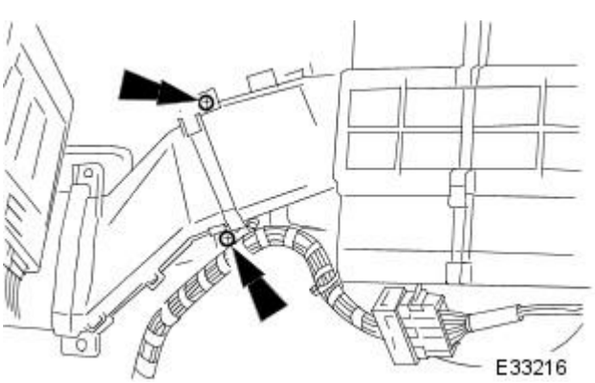

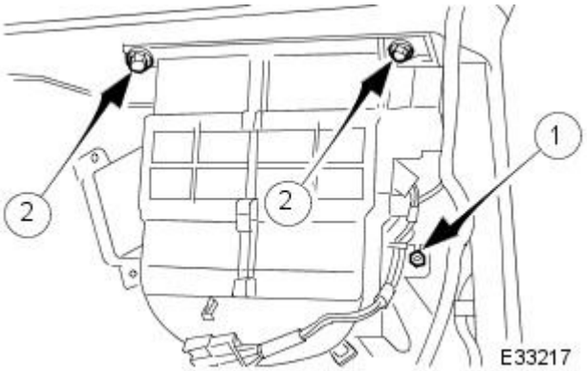

6. Remove the passenger side blower motor.

1. Loosen the nut.
2. Loosen the bolts.

Installation

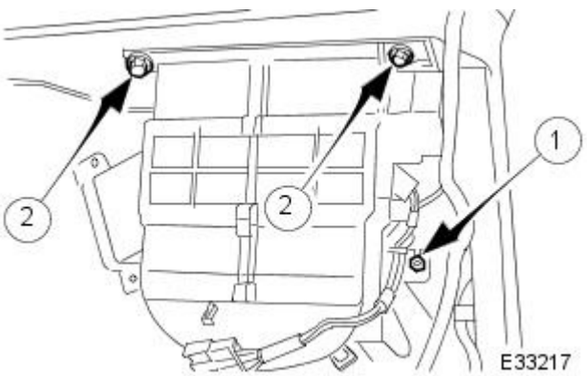

1. To install, reverse the removal procedure.

1. Tighten to 6 Nm.
2. Tighten to 6 Nm.

Air Distribution and Filtering - Pollen Filter

Removal and Installation

Removal

1. Install covers on front fenders.
2. Remove windshield wiper arms and blades. Refer to 84.15.44.90.
3. Remove plenum cover for access. Refer to 76.10.01.
4. Release two tangs securing the top of the filter element and tilt the top of the element forward.
5. Release the two lower securing tangs, lightly press the accelerator cable support clear and remove the filter element.

E34319

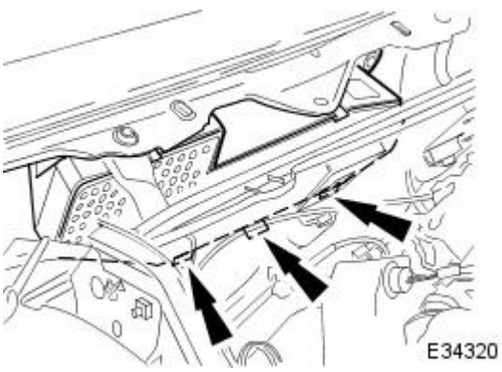

Installation

1. CAUTION: The air particle filter element must be installed with the white flock side facing forwards. If the element supplied will not fit in this position it must be changed for the correct part.

   Positioning lower securing tangs and accelerator cable support to achieve clearance, install element lower edge in the housing

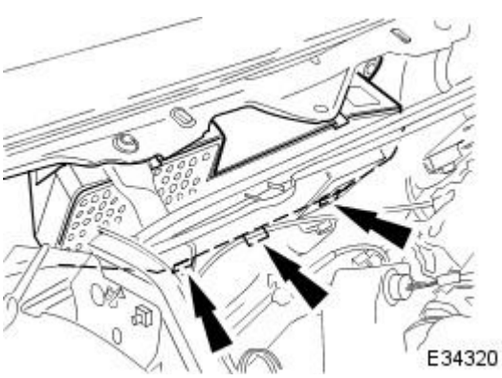

E34319

2. Lift the upper securing tangs, press the top of the filter element rearwards and fully seat it in the housing.
3. Install the plenum cover. Refer to 76.10.01.
4. Install windshield wiper arms and blades. Refer to 84.15.44.90.
5. Remove covers from fenders.

Heating and Ventilation - Heating and Ventilation

Description and Operation

Schematic Diagram

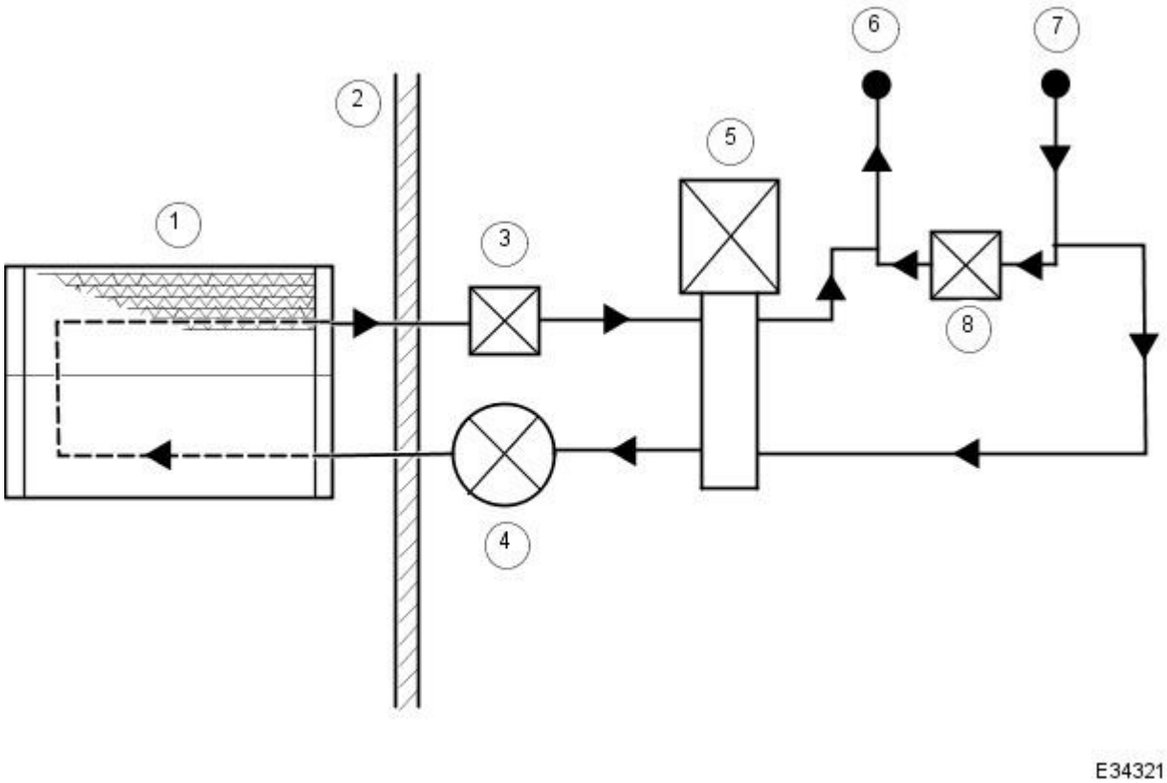

Parts List

Item	Part Number	Description
1	—	Heater matrix
2	—	Firewall
3	—	Non return valve
4	—	Water pump
5	—	Water valve
6	—	Return to engine
7	—	Feed from engine
8	—	Non return valve (heater bypass)

Heater System Components

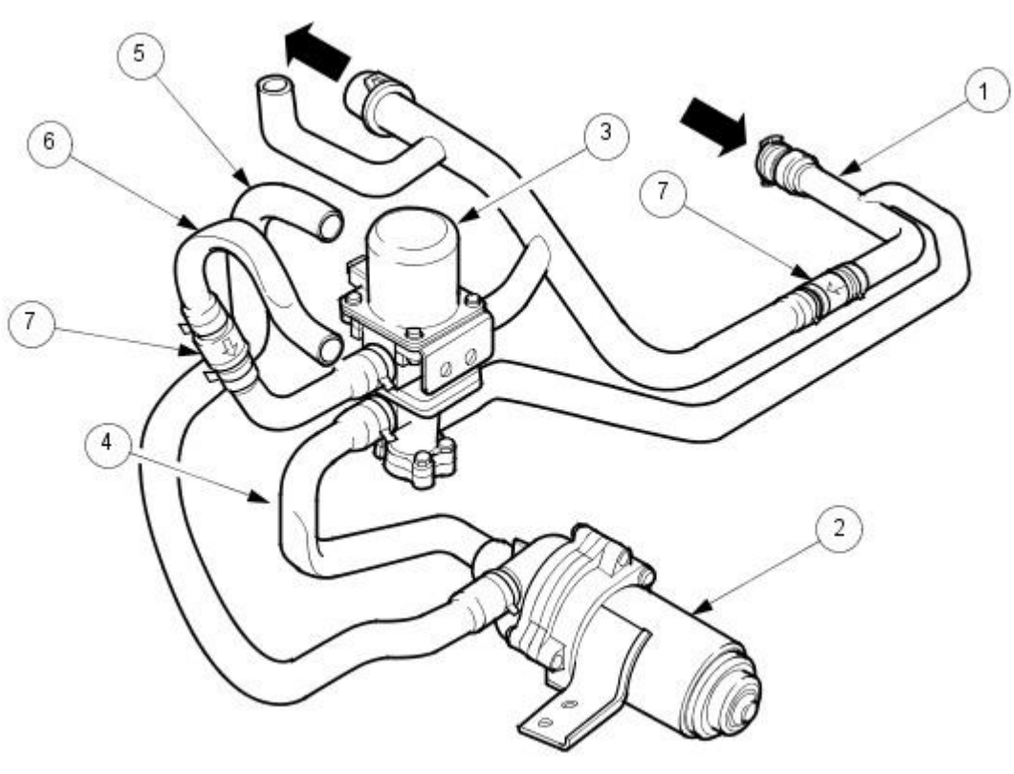

Parts List

Item	Part Number	Description
1	—	Hose - heater (from engine)
2	—	Assembly pump - water
3	—	Assembly valve - water
4*	—	Hose - water valve to water pump
5	—	Hose - water pump to heater (feed)
6*	—	Assembly hose - heater to water valve (return)
7	—	Valve - non return

• NOTE: * These hoses are flattened at the bends by design and NOT by incorrect installation.

The heater circuit 'scavenges' coolant from the engine cooling system by means of an electric water pump. The water pump has a protection circuit to inhibit operation when the coolant temperature is <16°C; this is to prevent possible damage to the impeller due to the presence of coolant borne ice particles. Coolant is drawn from the engine system through the water valve inlet port into the heater matrix. The coolant passes through the bottom section of the heater matrix from left to right filling the end tank of the matrix before returning through the top half of the matrix and through the outlet ports of the water valve and back into the engine cooling system.

Non return valves are located in the heater bypass hose and the hose between heater outlet and water valve. These valves are required to prevent coolant flowing in the wrong direction at low engine speeds and restrict convected flow through the heater after the engine is switched off.

When the exterior ambient temperature is > 3° C the refrigeration system automatically operates cooling and dehumidifying incoming air before it is re-heated by the heater matrix.

Water Valve Assembly

Location

The water valve assembly is located above the water pump, in the engine compartment and is secured to the firewall by a bracket. The valve operates by means of an electrical solenoid which oscillates the valve stem between the inlet and outlet ports.

A heatshield protects the water valve from exhaust system radiated heat.

When in automatic mode, the water valve is controlled by the following inputs to the A/CCM:

- Face outlet temperature, corrected for solar loading
- 'Air off' heater matrix temperature
- External ambient display temperature
- Coolant temperature
- Engine speed (valve closed with the engine not running)
- Demand (set) temperature

Re-heating of the refrigerated air is controlled by the time that the water valve is open (i.e. not energised) over a six second interval. The duty cycle of the water valve, the time open / time closed, is controlled by the A/CCM.

Maximum heating demand will cause the water valve to be fully open (not energised) to allow maximum coolant flow through the heater matrix.

At Maximum cooling, the water valve will be fully closed (energised) to prevent hot (engine temperature) coolant entering the heater circuit; the pump however will continue to circulate coolant through both the heater matrix and water valve bypass.

The water valve defaults open when the ignition is OFF.

Under engine stall conditions, when ignition is ON, the water valve will be open.

Water Pump Assembly

Located in the same area as the water valve, the water pump continually circulates coolant through the heater matrix except when the conditions below apply:

- The engine coolant is below 16°C.
- The ignition is OFF.
- Under engine stall conditions, when ignition is ON.
- Control panel OFF

Non return valves

The heater bypass hose has a non-return valve, located between the engine feed and return hoses. The valve prevents the water pump from recirculating coolant from the heater at low engine speeds.

The flow indicator arrow embossed on the valve body MUST point towards the coolant header tank.

CAUTION: Coolant flow will be compromised if either valve is fitted incorrectly. Observe the correct direction.

A second non-return valve is located in the heater outlet to water valve hose. This valve prevents hot coolant from flowing into the heater with the engine switched off. The flow indicator arrow MUST point towards the water valve.

Heater feed and return hoses

The heater feed and return hoses are connected to the engine feed and return hoses by 'Quick-Fit' connection unions. The feed hose has a Norma R20 connector and the return hose a Norma push and seal connector. The coolant system bleed joints have Cobra clamps. All remaining hose connections have spring band hose clamps.

The engine feed hose is connected to the engine bypass housing and the engine return hose is connected to the engine water pump.

Clamp Identification

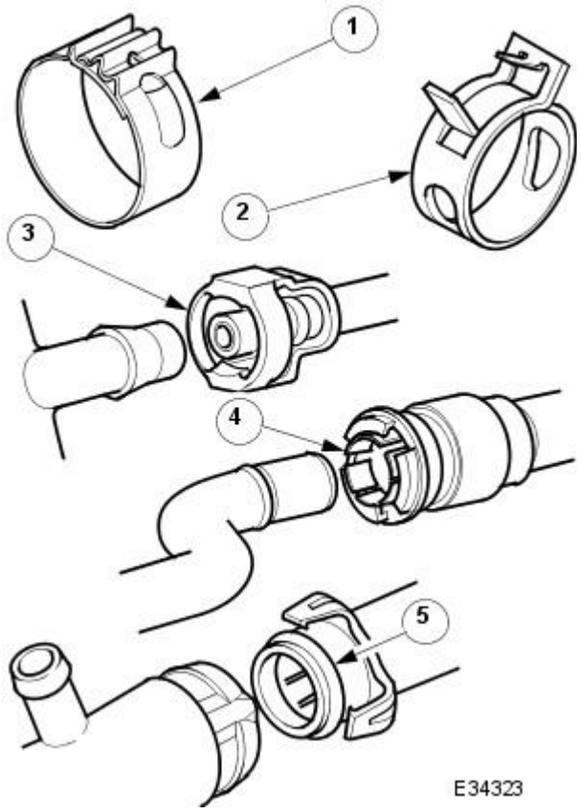

Parts List

Item	Part Number	Description
1	—	Cobra
2	—	Spring band
3	—	Quick-fit
4	—	Norma push and seal 'R' type
5	—	Norma push and seal 15

Published: 11-May-2011

Heating and Ventilation - Heating and Ventilation

Diagnosis and Testing

Refer to Section 412-00.

Heating and Ventilation - Heater Core

Removal and Installation

Removal

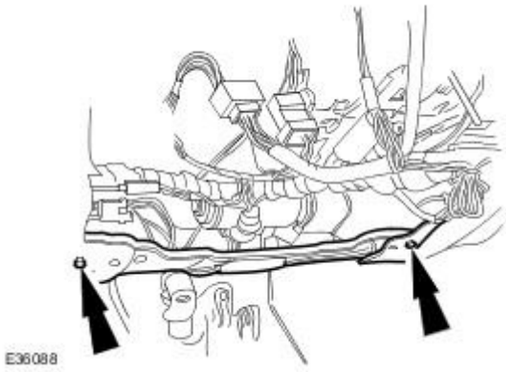

1. Remove upper steering column; refer to 57.40.02.
2. Drain radiator coolant only; refer to 26.10.01 or (SC)26 .10.01.
3. Remove footwell lamp mounting bracket.
   - Remove bracket to fascia securing screws.
   - Remove bracket.
4. Remove major gauge module; refer to 88.20.24.
5. Remove fascia support bracket to bulkhead securing bolts (from between air duct and fascia harness).
6. Disconnect cool air bypass servo motor connector and heater matrix pipes.
   - Disconnect connector.
   - Remove screws which secure retaining brackets.

     • NOTE: Position suitable cloth to absorb coolant leakage before disconnecting pipes.
   - Remove retaining brackets.
   - Remove screws which secure matrix clamps.
   - Remove clamps.

     • NOTE: Remove and discard O-ring seals from pipes; fit suitable blanking plugs.
   - Displace pipes from matrix.
7. Remove heater matrix from heater/cooler assembly.
   - Remove screw which secures heater matrix retaining plate.
   - Remove heater matrix retaining plate.
   - Displace and reposition fascia support bracket to permit removal of heater matrix.
   - Remove heater matrix.

Installation

1. NOTE: Fit new O-ring seals.

Installation is the reverse of removal procedure.

Heating and Ventilation - Heater Core and Evaporator Core Housing

Removal and Installation

Removal

1. Disconnect battery ground cable (IMPORTANT, see SRO 86.15.19 for further information).

2. Recover refrigerant from air conditioning system; refer to 82.30.30.

3. Drain radiator coolant only; refer to 26.10.01 or (SC) 26.10.01.

4. Remove instrument panel; refer to 76.46.01.90.

5. From under the hood: Disconnect air conditioning pipes at the evaporator.

1. Remove bolts.
2. Discard O-rings.
3. Install suitable blanking plugs.

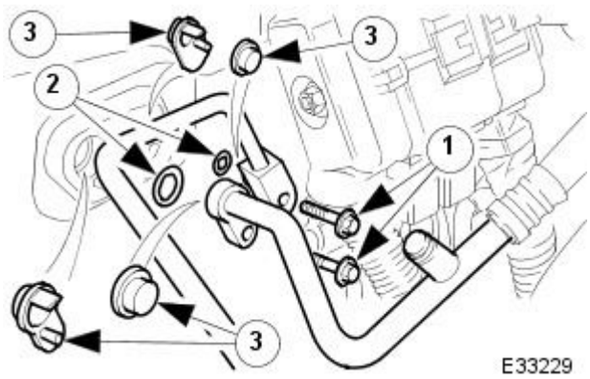

6. Disconnect heater hoses from heater matrix pipes.

1. Release spring band clips and disconnect heater hoses.
2. Install suitable blanking plugs.

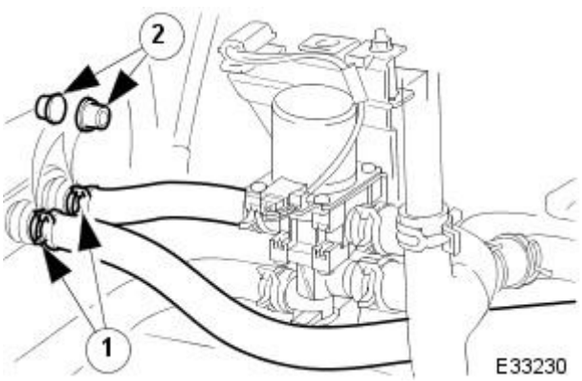

7. From inside the vehicle: remove brace.

- Remove steering column upper mounting bracket / brace to firewall securing bolt.
- Remove brace to firewall securing bolt (where fitted).
- Remove brace to transmission tunnel securing bolts.
- Remove brace.

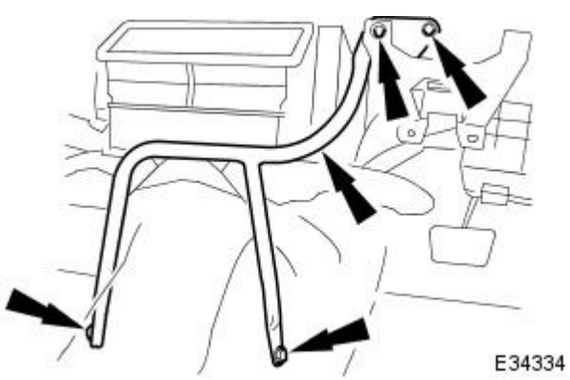

8. Remove LH fan motor duct.

- Remove screws.
- Remove duct.

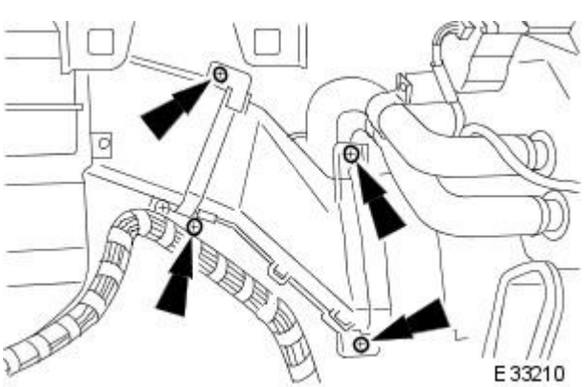

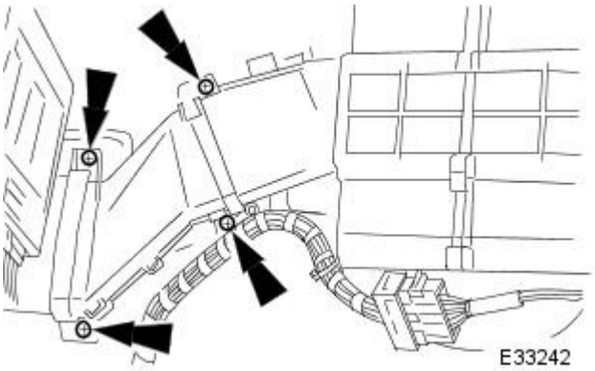

9. Remove RH fan motor duct.

- Remove screws.
- Remove duct.

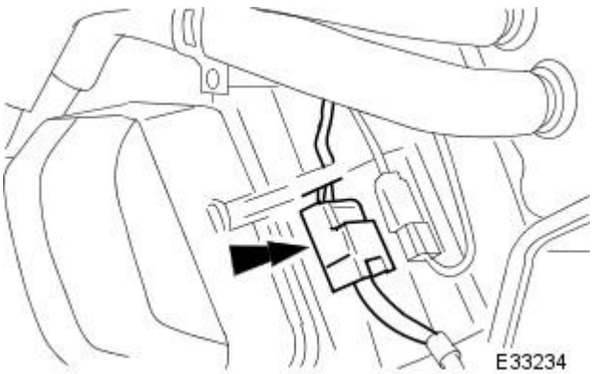

10. Disconnect heater / cooler unit electrical connector.

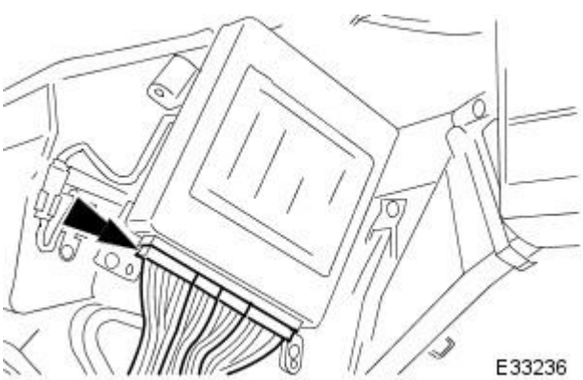

11. Disconnect air conditioning control module electrical connectors.

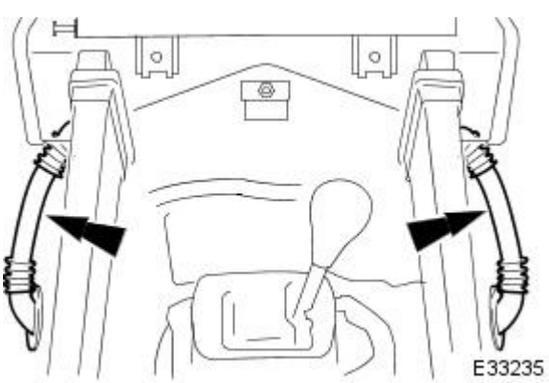

12. Disconnect condensate drain tubes from heater / cooler assembly.

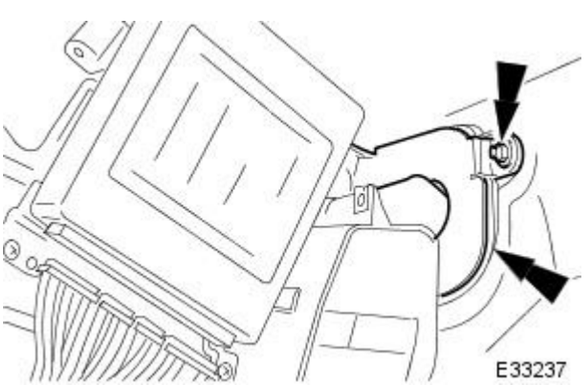

13. Remove fixing securing evaporator pipe support bracket to firewall.

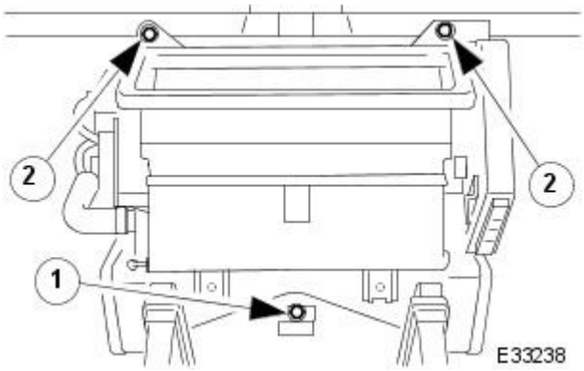

14. Remove heater / cooler assembly fixings.

1. Remove lower fixing nut.
2. Remove upper fixing nuts.

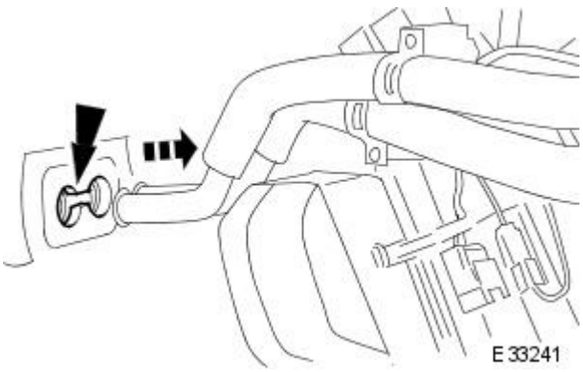

15. Remove heater / cooler unit from vehicle.

- Manoeuvre matrix heater pipe stubs through firewall grommet into vehicle.
- Remove unit.

Installation

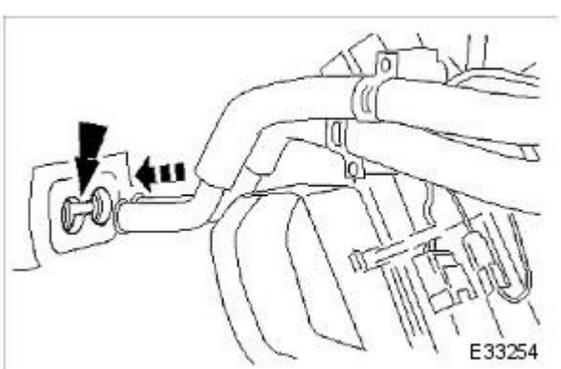

1. Install heater / cooler unit into vehicle.

- Guide matrix heater pipe stubs through firewall grommet.
- Position heater / cooler unit against firewall.

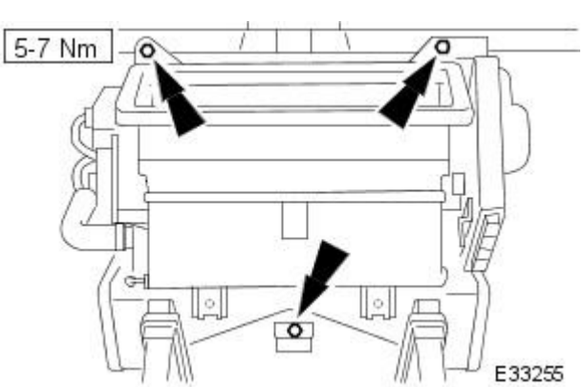

2. Install heater / cooler assembly fixings.

- Install upper fixing nuts.
- Install lower fixing nut.

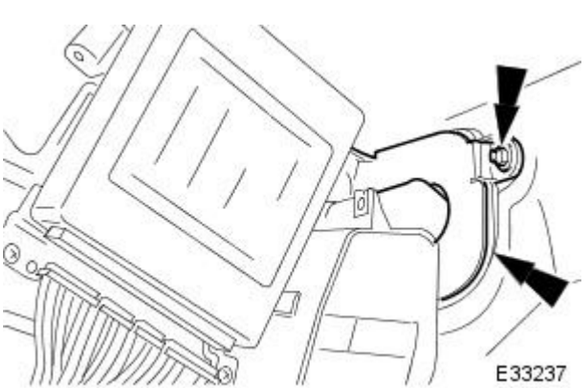

3. Install fixing securing evaporator pipe support bracket to firewall.

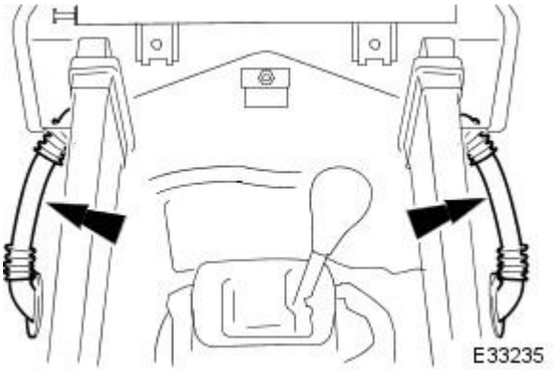

4. Connect condensate drain tubes to heater / cooler unit.

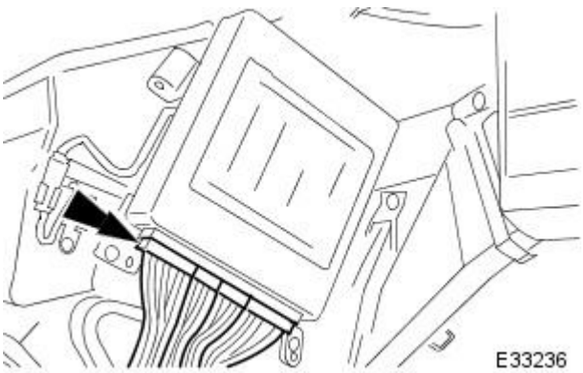

5. Reconnect air conditioning control module electrical connectors.

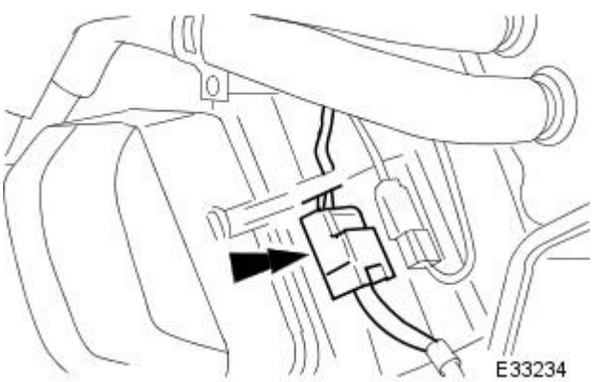

6. Connect heater / cooler unit electrical connector.

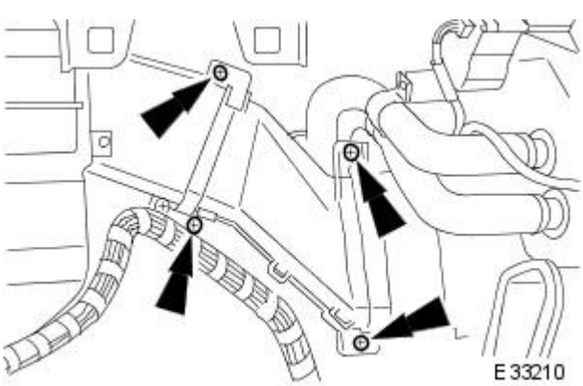

7. Install LH fan motor duct.

- Reposition and install duct.
- Install screws.

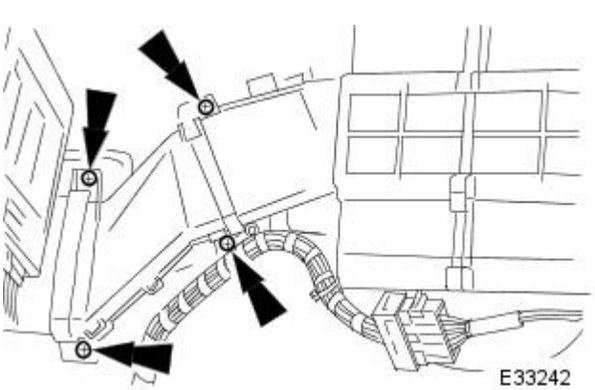

8. Install RH fan motor duct.

- Reposition and install duct.
- Install screws.

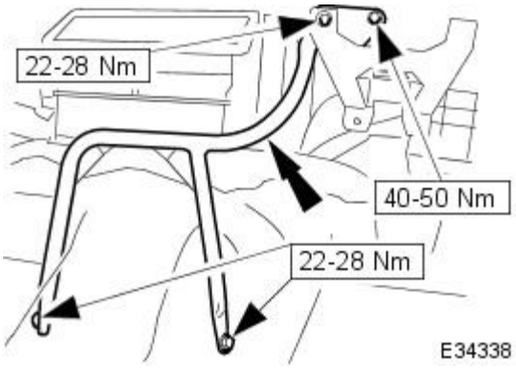

9. Install brace.

- Reposition and align brace to heater / cooler unit.
- Install brace to transmission tunnel securing bolts.
- Install brace to bulkhead securing bolt (where fitted).
- Install steering column upper mounting bracket / brace to firewall securing bolt.

10. Under hood: reconnect heater hoses to heater matrix pipes.

- Remove blanking plugs.
- Reconnect heater hoses and reposition spring band clips.

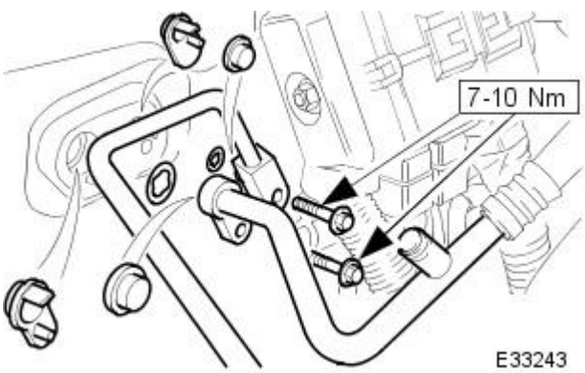

11. Reconnect air conditioning pipes at the evaporator.

- Remove blanking plugs.
- Install , fully seat and lubricate new O-rings.
- Install bolts.

12. Install instrument panel; refer to 76.46.01.90.

13. Recharge air conditioning system; refer to 82.30.30.

14. Re-fill cooling system, 26.10.01

15. Reconnect battery ground cable (IMPORTANT, see SRO 86.15.15 for further information).

Published: 11-May-2011

Air Conditioning -

Torque Specifications

Description	Nm	lb-ft	lb-in
Air conditioning (A/C) compressor clutch retaining nut	19	14	-
Air conditioning (A/C) compressor mounting retaining bolts	25	18	-
Air conditioning (A/C) compressor manifold and tube retaining bolt	20	15	-
Air conditioning (A/C) condenser core retaining studs	7	-	62
Air conditioning (A/C) condenser core supply and return lines retaining nuts	8	-	71
Power steering oil cooler retaining nuts	7	-	62
Air conditioning (A/C) pressure cutoff switch	8	-	71

Air Conditioning - Air Conditioning

Description and Operation

Introduction

Component Location

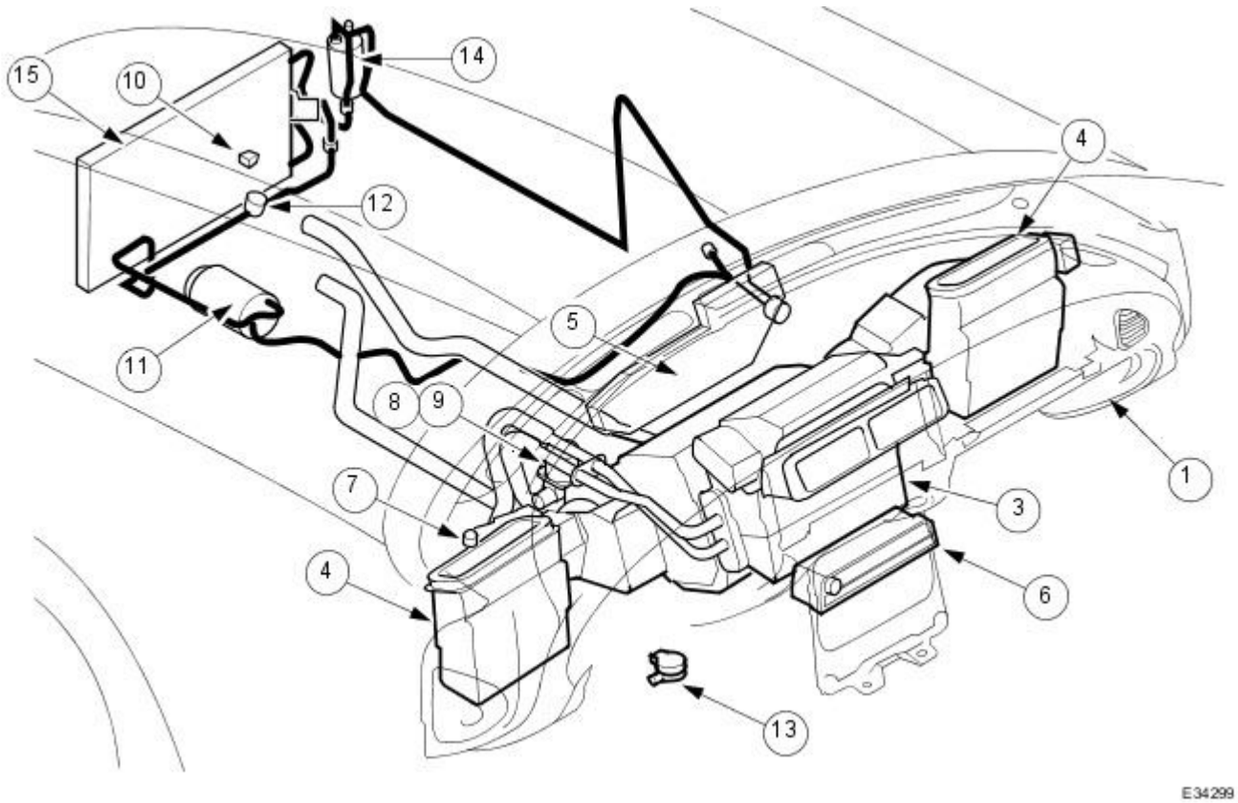

Parts List

Item	Part Number	Description
1	—	Fascia panel with integral ducting
2	—	Heater / cooler assembly
3	—	A/CCM
4	—	Blower LH and RH
5	—	Plenum
6	—	Control panel
7	—	Solar sensor (LHD shown)
8	—	Assembly valve - water
9	—	Assembly pump - water
10	—	Temperature sensor - external
11	—	Compressor
12	—	Pressure switch - 4 level
13	—	Motorized in-car aspirator (LHD shown)
14	—	Receiver drier
15	—	Condenser

The climate control system features fully automatic control of temperature, blower speed (airflow) and air distribution to maintain optimum comfort under most driving conditions.

Manual controls are provided to allow the operator to over-ride automatic operation.

System Features

- Twin blower assemblies
- Center mounted evaporator, heater and air distribution unit
- Electric solenoid water valve controlled heating
- Electric water pump assembly
- Servo motor driven air distribution flaps
- Temperature differential control between foot and face outlets
- Dedicated side glass defrost / demist vents
- External temperature sensor
- Motorised in-car aspirator
- Solar sensor

Electronic Control Panel

- Liquid Crystal Display (LCD)
- Digital temperature display
- Manual fan speed level
- External temperature display
- Celsius / Fahrenheit selection
- Heated windshield switch (where fitted)
- Heated backlight switch

- Defrost switch
- Manual airflow distribution overrides (4)
- Access to self diagnostic system and error codes

Sensors

- External ambient temperature sensor
- Motorized in-car aspirator
- Heater matrix temperature sensor
- Evaporator temperature sensor
- Solar sensor

These sensors feedback information to the Air Conditioning Control Module (A/CCM) which automatically adjusts air temperature, airflow volume and distribution from the air conditioning unit to maintain a stable passenger compartment average temperature under changing weather conditions.

Major Components

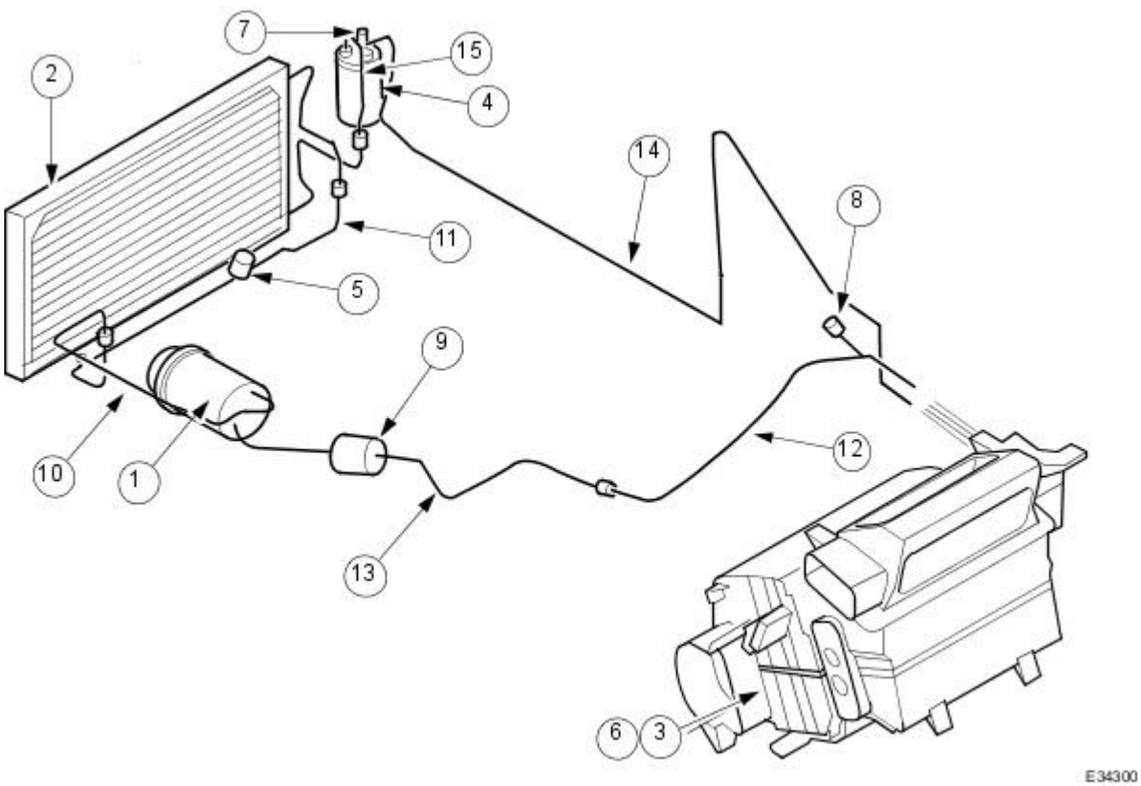

Item	Part Number	Description
1	—	Compressor assembly
2	—	Condenser
3	—	Evaporator and heater matrix (internal)
4	—	Receiver drier
5	—	4-level pressure switch
6	—	Expansion valve (internal)
7	—	High-side charge port
8	—	Low-side charge port
9	—	Suction muffler
10	—	Discharge hose
11	—	Discharge pipe
12	—	Suction hose
13	—	Suction pipe
14	—	Liquid line
15	—	Jumper hose (condenser hose)

Compressor

Features

- Engine mounted, driven by the accessory drive belt.
- Fixed displacement type.
- High-pressure relief valve, to avoid system over-pressure.
- ECM controlled clutch energized via a relay.

Receiver drier

- Vertically mounted on the right-hand side of the engine compartment next to the engine coolant radiator.
- Fitted with the high-side charge port.

Condenser

- Multi-pass fin-over-tube type, mounted in front of the engine cooling pack and directly to the radiator.

Pressure (Bitron) switch

- Located in the discharge pipe.
- Provides a signal, via the A/CCM, to the ECM, to disengage the compressor clutch should the refrigerant pressure be < 2 bar or > 30 bar.
- Provides a hard-wired signal to the ECM, to switch the cooling fans to HIGH speed at 22 bar rising pressure and to LOW speed at 17,5 bar falling pressure.
- Provides a hard-wired signal to the ECM, to switch the radiator cooling fans to LOW speed at 12 bar rising pressure and to switch the fans OFF at 8 bar falling pressure.

Expansion Valve

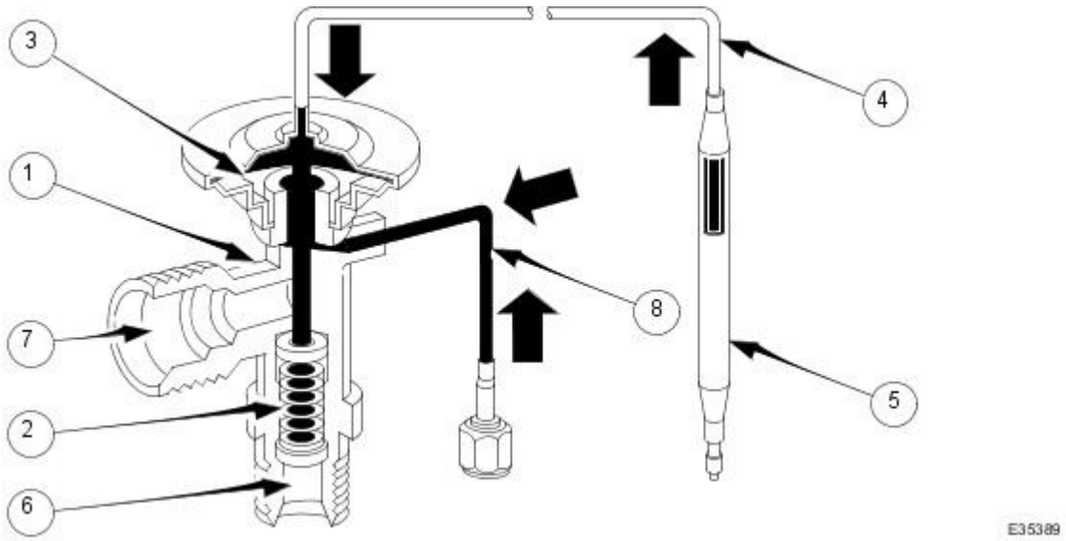

Parts List

Item	Part Number	Description
1	—	Valve body
2	—	Pressure spring
3	—	Diaphragm
4	—	Capillary tube
5	—	Temperature sensing bulb
6	—	Valve inlet
7	—	Valve outlet
8	—	Equalizer pipe

The expansion valve is located inside the heater / air conditioning unit and comprises of a diaphragm, connected by a capillary tube to a temperature sensing bulb, which regulates the valve according to temperature variations at the evaporator outlet pipe. This component is NOT serviceable. See 'Refrigeration Cycle'

Air Conditioning (Heater / Cooler) Unit

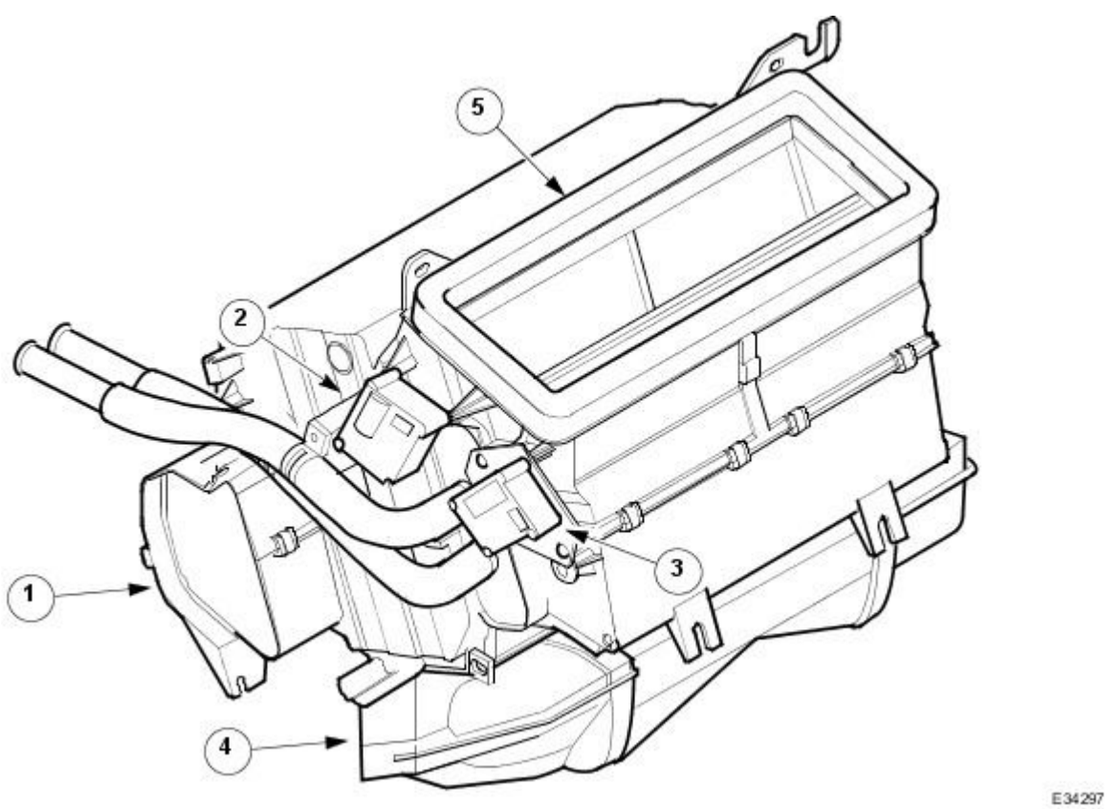

Parts List

Item	Part Number	Description
1	—	Air inlet - LH (RH opposite, not shown)
2	—	Servomotor - cool air bypass

3	—	Servomotor - footwell outlet
4	—	Air outlet - footwell
5	—	Air outlet - ADB (with foam seal)

The air conditioning unit houses the evaporator, heater matrix and their temperature sensors. The unit also incorporates two servo motor operated air distribution flaps which regulate airflow to the front footwells and the quantity of airflow through the cool air bypass (air which by-passes heater matrix) up to the upper air distribution box (ADB).

When the front footwell flap is open, air is ducted to the footwell area via the lower air distribution duct (LADD) and front footwell duct. The LADD is clipped to the bottom of the air conditioning unit case and the front foot ducts clipped onto the outlets of the LADD.

Condensate (water) which forms on the evaporator fins is drained out of the unit case through two drains, located either side of the unit underneath the evaporator. The liquid is routed to the vehicle exterior via flexible tubes which are located behind the firewall heatshield.

Refrigeration Cycle

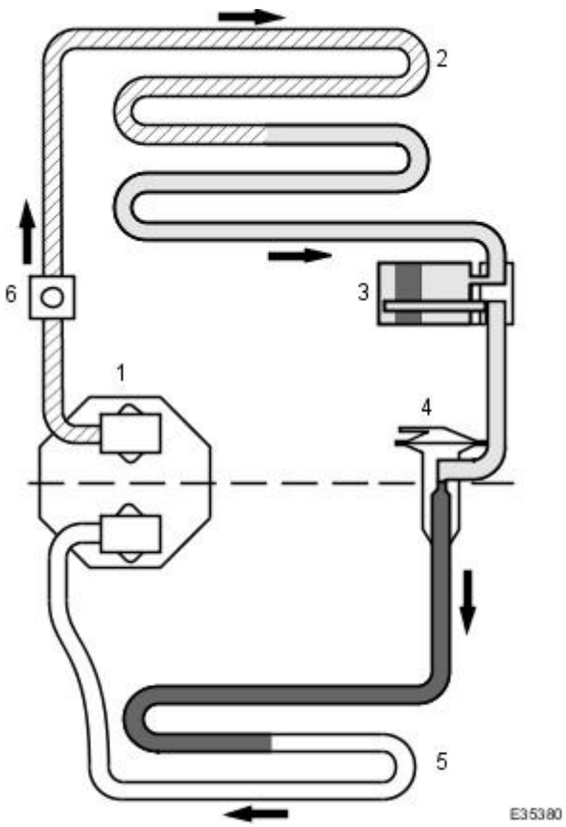

Item	Part Number	Description
1	—	Compressor
2	—	Condenser
3	—	Receiver drier
4	—	Expansion valve
5	—	Evaporator
6	—	4-level pressure switch

The Compressor draws low pressure, low temperature, refrigerant from the evaporator and, by compression, raises the refrigerant temperature and pressure. High pressure, hot, vaporized refrigerant enters the condenser, where it is cooled by the flow of ambient air. A change of state occurs as the refrigerant cools in the condenser and it becomes a reduced temperature, high pressure, liquid.

From the condenser, the liquid passes into the receiver drier which has three functions:

- Storage vessel for varying system refrigerant demand.
- Filter to remove system contaminants.
- Moisture removal via the dessicant.

With the passage through the receiver drier completed, the liquid refrigerant, still at high pressure, enters the expansion valve where it is metered through a controlled orifice, which has the effect of reducing the pressure and temperature. The refrigerant, now in a cold atomized state, flows into the evaporator and cools the air passing through the matrix.

As heat is absorbed by the refrigerant, it once again changes state, into a vapor, and returns to the compressor for the cycle to be repeated.

An automatic safety valve is incorporated in the compressor, which will operate if the system pressure rises above 41 bar. The valve will reseat when the pressure drops below 27,6 bar.

The terms 'high' and 'low' pressure (or side) refer to the pressure differential between the compressor and expansion valve ports. This differential is critical to system fault diagnosis and efficiency checks.

Published: 11-May-2011

Air Conditioning - Air Conditioning

Diagnosis and Testing

Refer to section 412-00.

Air Conditioning - Air Conditioning (A/C) Compressor

Removal and Installation

Special Tool(s)	
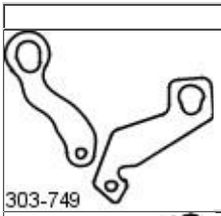 303-749	Engine lifting brackets 303-749
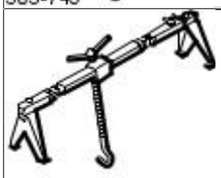 303-021	Engine support bracket 303-021

Removal

All vehicles

1. Carry out the air conditioning (A/C) system recovery procedure.
   For additional information, refer to Section 412-00 Climate Control System - General Information.
2. Disconnect the battery ground cable.
   For additional information, refer to Section 414-01 Battery, Mounting and Cables.
3. Raise and support the vehicle.
   For additional information, refer to Section 100-02 Jacking and Lifting.
4. NOTE: Right hand shown left hand similar.

   Remove both engine mount lower retaining bolts.

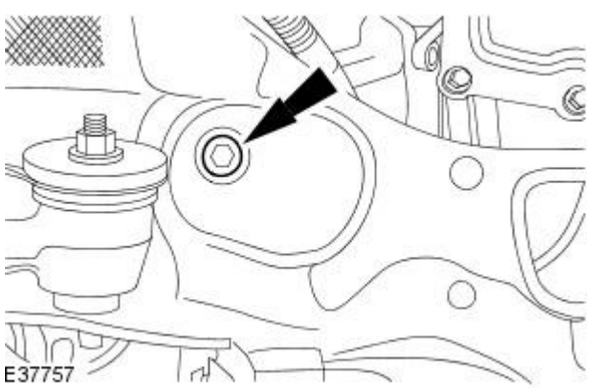

5. Lower the vehicle.

Vehicles without supercharger

6. Remove the oil filler cap.

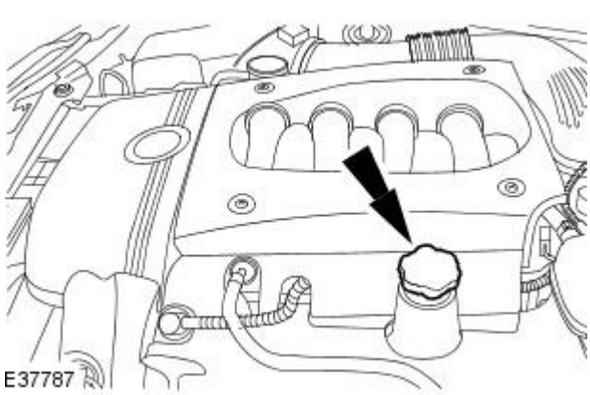

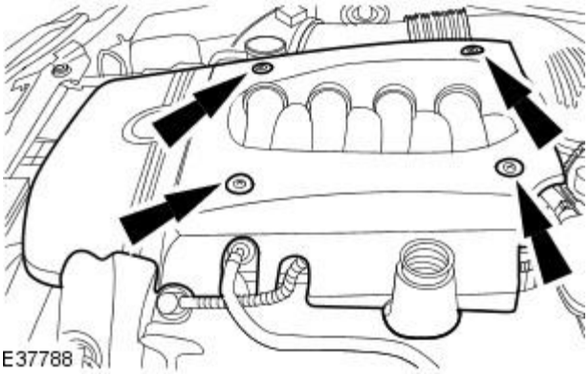

7. Remove the engine cover.

All vehicles

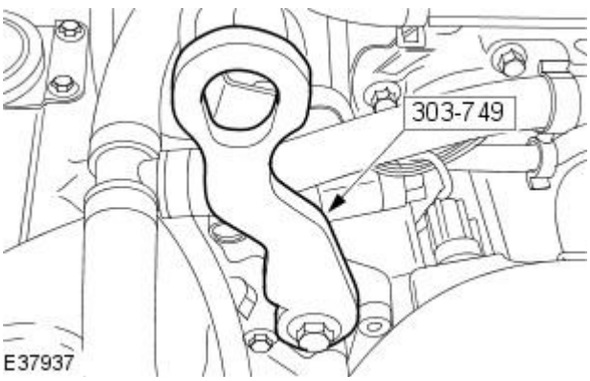

8. Install the engine lifting bracket.

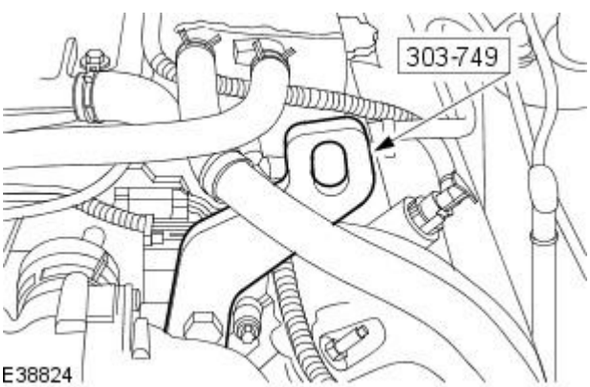

9. Install the engine lifting bracket.

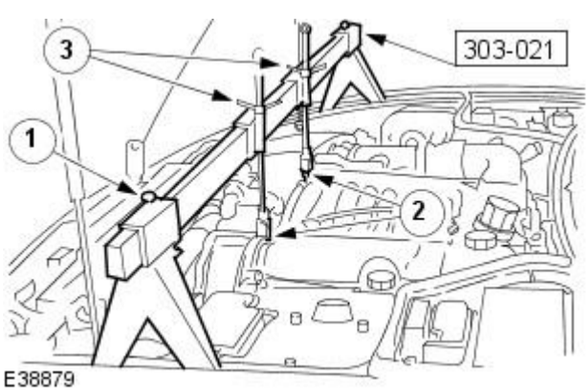

10. Using the special tool support the weight of the engine.

1. Position the special tool to the fender channels and tighten beam fixings.
2. Attach the hooks to the engine front lifting brackets.
3. Tighten the hook adjustment nuts until the weight of the engine is supported.

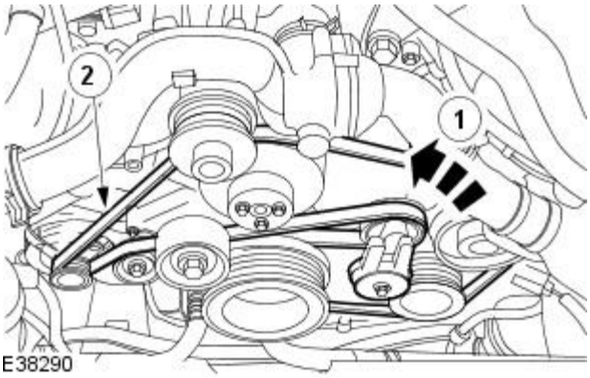

E38290

11. Detach the accessory drive belt.

1. Rotate the accessory drive belt tensioner counter-clockwise
   1. Use a 3/8 inch square drive bar to rotate the accessory drive belt tensioner.
2. Detach the accessory drive belt.

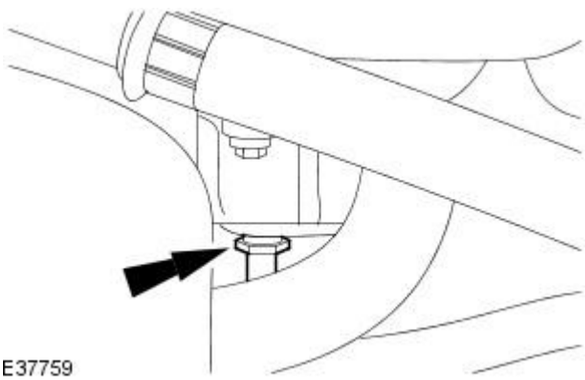
E37759

12. CAUTIONS:

If power steering fluid comes into contact with the paintwork, the affected area must be immediately washed down with cold water.

Cap the power steering lines to prevent loss of fluid and dirt ingress.

• NOTE: Drain the power steering fluid into a suitable container.

Disconnect the power steering pump line.

- Remove and discard the O-ring seal.

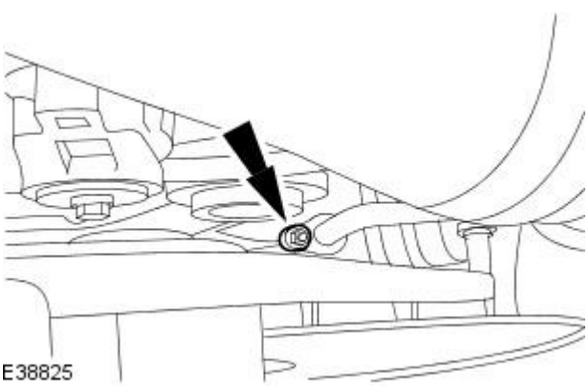
E38825

13. NOTE: Cap the exposed ports.

Disconnect the A/C line connection.

- Remove the retaining nut.
- Remove and discard the O-ring seal.

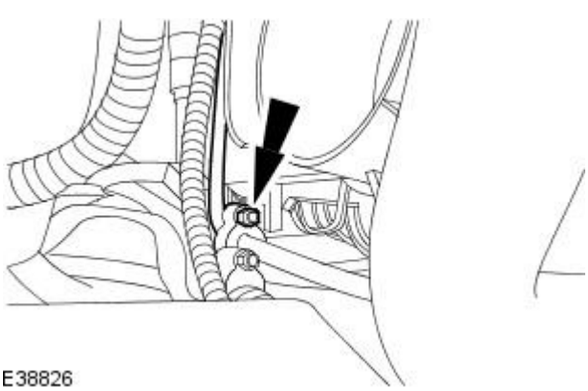
E38826

14. NOTE: Cap the exposed ports.

Disconnect the A/C line connection.

- Remove the retaining nut.
- Remove and discard the O-ring seal.

15. Raise the vehicle.

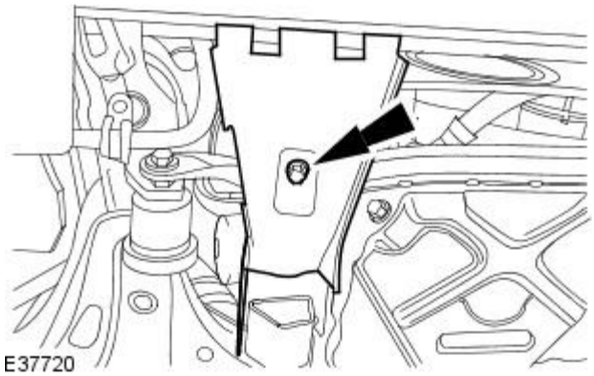
E37720

16. Remove the generator lower cooling duct.

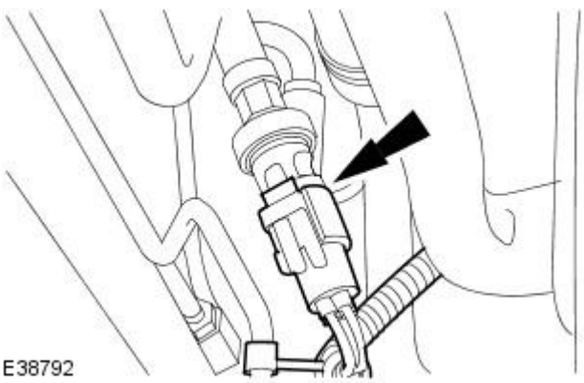
E38792

17. Disconnect the pressure cutoff switch electrical connector.

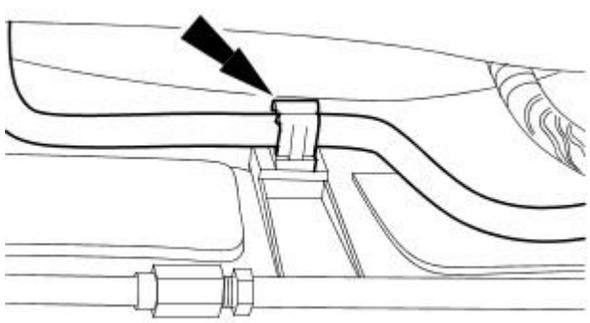
E37734

18. NOTE: Cap the exposed ports.

Remove the A/C line.

- Remove and discard the O-ring seal.

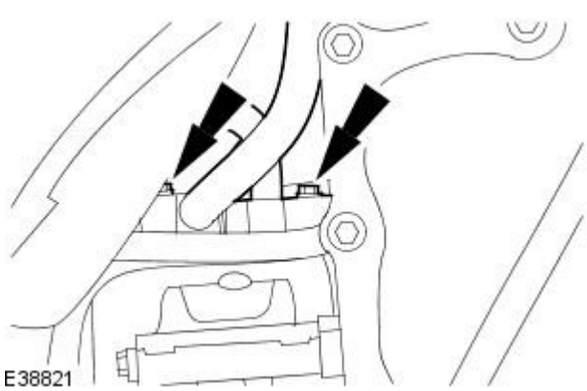
E38821

19. NOTE: Cap the exposed ports.

Disconnect the A/C lines from the A/C compressor.

- Remove and discard the O-ring seal.

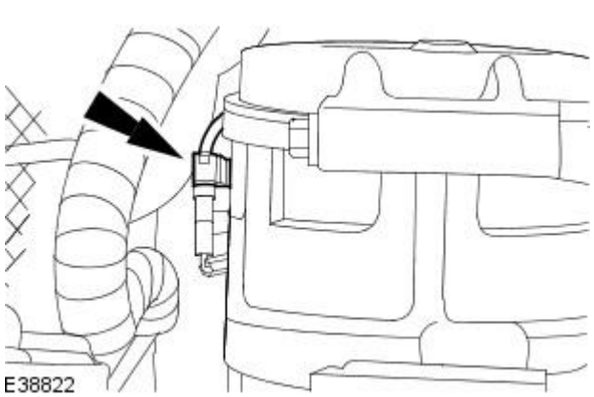
E38822

20. Disconnect the A/C compressor coil and field coil electrical connector.

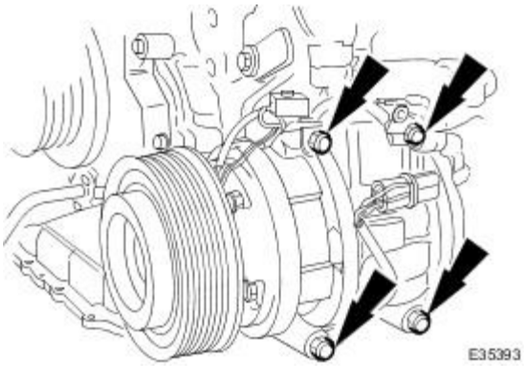

21. CAUTION: Make sure no damage occurs to the transmission fluid cooler lines. Failure to follow these instructions may result in damage to the vehicle.

• NOTE: Reposition the compressor to remove the retaining bolts.

Remove the A/C compressor.

Installation

All vehicles

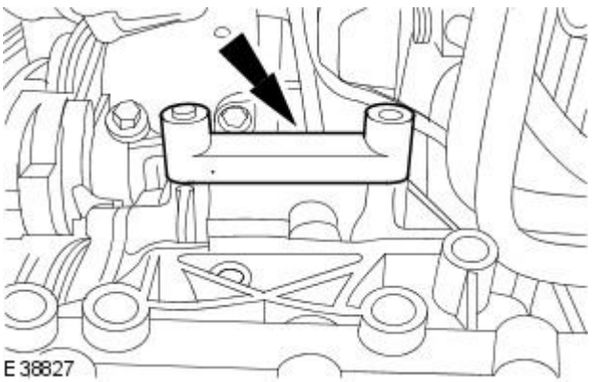

1. Make sure the A/C compressor mount bracket is correctly seated.

2. Add the correct amount of A/C refrigerant oil to the A/C compressor. For additional information, refer to Section 412-00 Climate Control System - General Information.

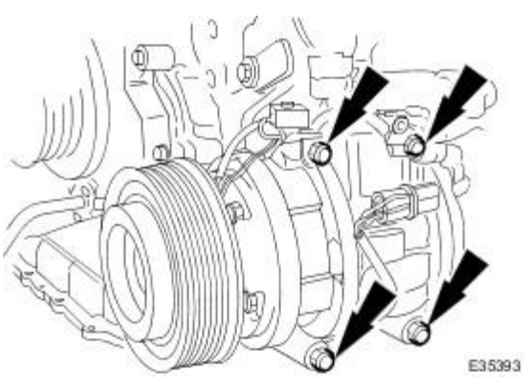

3. CAUTION: Make sure no damage occurs to the transmission cooler fluid tubes. Failure to follow these instructions may result in damage to the vehicle.

• NOTE: Install the retaining bolts to the A/C compressor before installing the A/C compressor.

Install the A/C compressor.

- Tighten to 25 Nm.

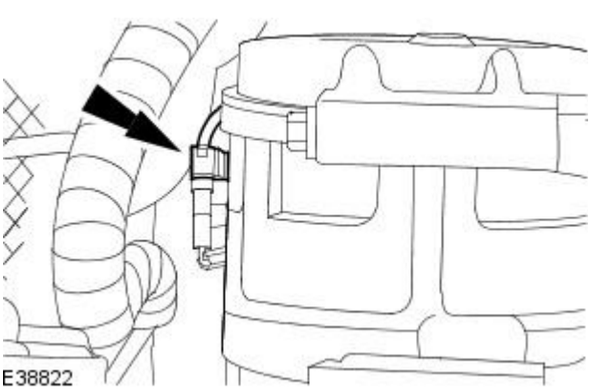

4. Connect the A/C compressor coil and field coil electrical connector.

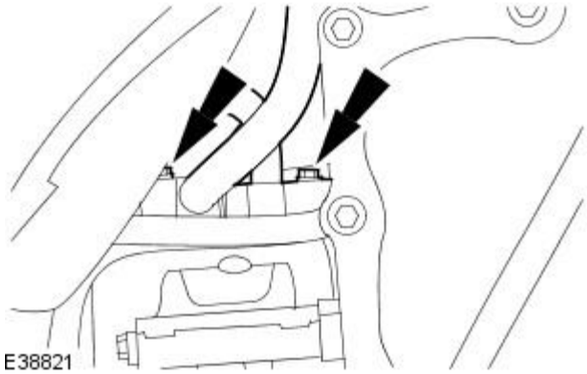

5. NOTE: Uncap the exposed ports.

• NOTE: Install new A/C compressor O-ring seals.

• NOTE: Lubricate the new O-rings with A/C refrigerant oil.

Connect the A/C lines to the compressor.

- Tighten to 20 Nm.

6. Clean off any oil residue that may contain A/C system flourescent dye.

7. NOTE: Uncap the exposed ports.

• NOTE: Install new A/C line O-ring seals.

• NOTE: Lubricate the new O-rings with A/C refrigerant oil.

Install the air conditioning line.

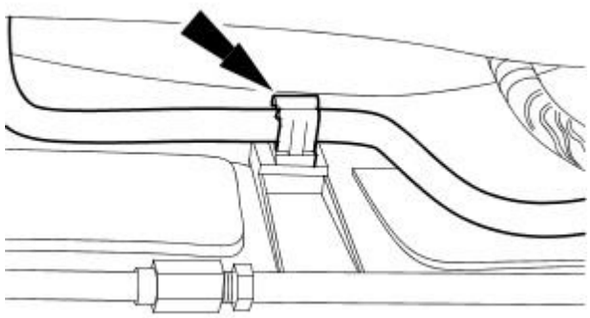

8. Clean off any oil residue that may contain A/C system flourescent dye.

9. Connect the pressure cutoff switch electrical connector.

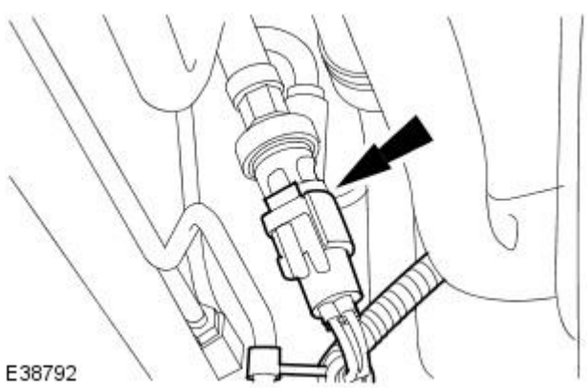

10. Install the generator lower cooling duct.

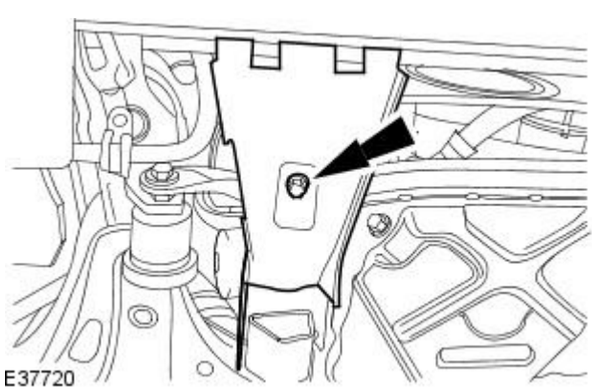

11. Lower the vehicle.

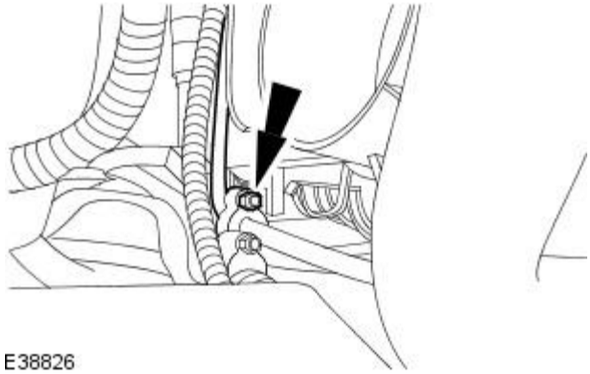

12. NOTE: Uncap the exposed ports.

Connect the A/C line connection.

- Tighten to 12 Nm.

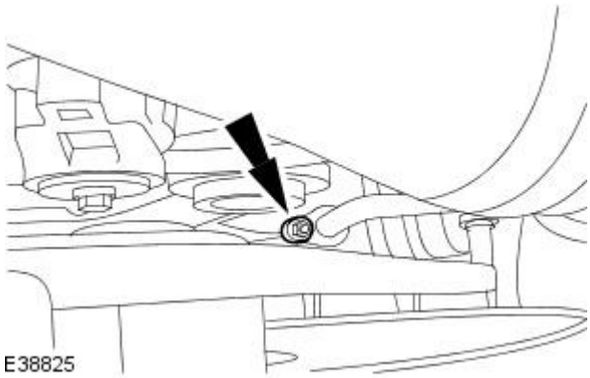

13. NOTE: Uncap the exposed ports.

Connect the A/C line connection.

- Tighten to 12 Nm.

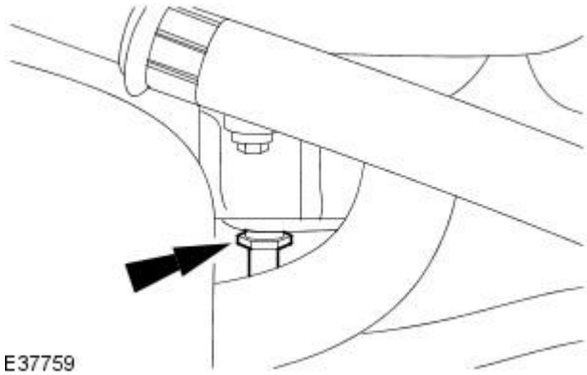

14. CAUTION: If power steering fluid comes into contact with the paintwork, the affected area must be immediately washed down with cold water.

• NOTE: Uncap the exposed ports.

• NOTE: Install a new power steering line O-ring seal.

Connect the power steering pump line.

- Tighten to 25 Nm.

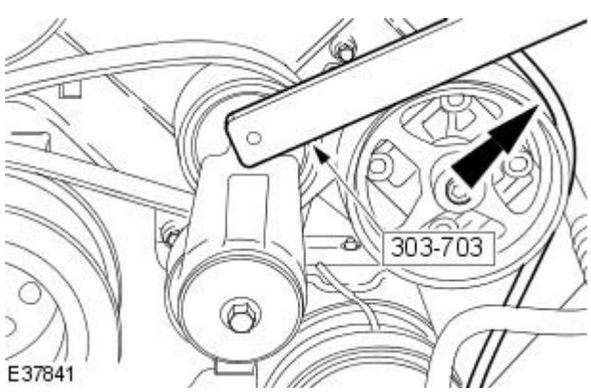

15. CAUTION: Make sure that the accessory drive belt is correctly aligned to the accessory drive belt pulleys and tensioners. Failure to follow these instructions may result in damage to the vehicle.

Attach the accessory drive belt.

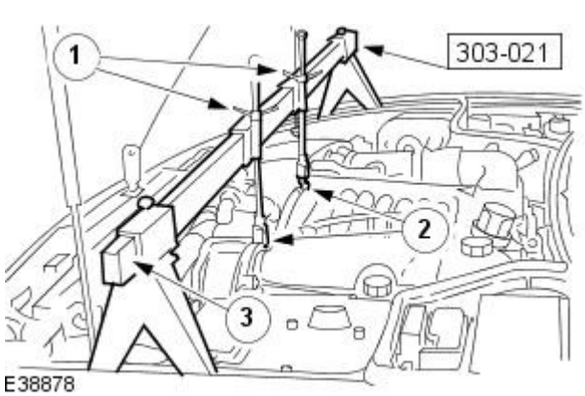

16. Remove the special tool.

1. Loosen the hook adjustment nuts.
2. Detach the hooks from the engine front lifting brackets.
3. Remove the special tool.

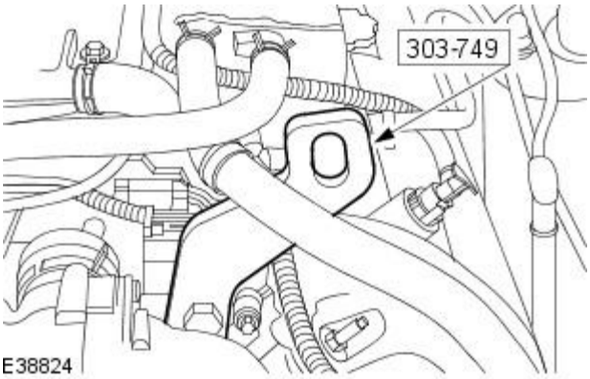

17. Remove the engine lifting bracket.

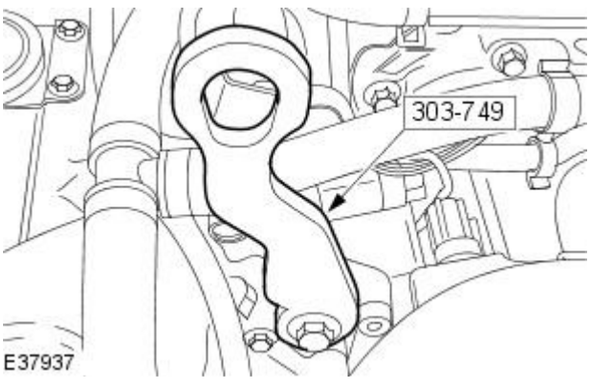

18. Remove the engine lifting bracket.

Vehicles without supercharger

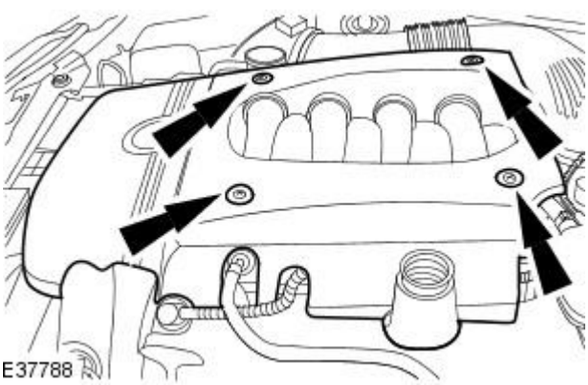

19. Install the engine cover.

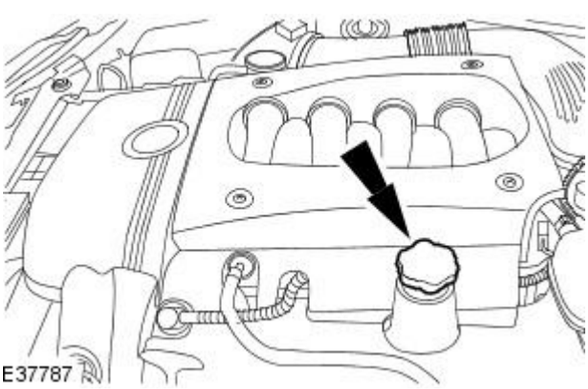

20. Install the oil filler cap.

All vehicles

21. Raise the vehicle.

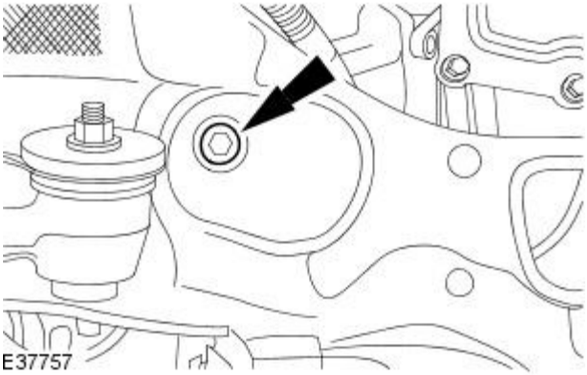

22. NOTE: Right hand shown left hand similar.

Install both the engine mount lower retaining bolts.

- Tighten to 30 (+/- 15%) Nm.

23. Lower the vehicle.

24. Connect the battery ground cable.
For additional information, refer to Section 414-01 Battery, Mounting and Cables.

25. Carry out the air conditioning (A/C) system charging procedure.
For additional information, refer to Section 412-00 Climate Control System - General Information.

26. Bleed the power steering system.
For additional information, refer to Section 211-00 Steering System - General Information.

Published: 11-May-2011

Air Conditioning - Condenser Core

Removal and Installation

Removal

1. NOTE: The procedure for the condenser core is the same as the procedure for the radiator.

Remove the radiator.
For additional information, refer to: Radiator - V8 4.2L Petrol (303-03A Engine Cooling, Removal and Installation) / Radiator - V8 S/C 4.2L Petrol (303-03A Engine Cooling, Removal and Installation).

Installation

1. NOTE: The procedure for the condenser core is the same as the procedure for the radiator.

Install the radiator.
For additional information, refer to: Radiator - V8 4.2L Petrol (303-03A Engine Cooling, Removal and Installation) / Radiator - V8 S/C 4.2L Petrol (303-03A Engine Cooling, Removal and Installation).

Air Conditioning - Evaporator Core

Removal and Installation

Removal

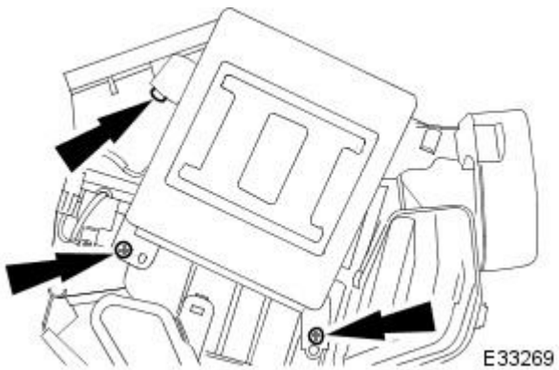

1. Remove heater / cooler unit; refer to 82.25.21.
2. Remove air conditioning control module from heater / cooler unit.
   - Slacken upper fixing.
   - Remove lower fixings.

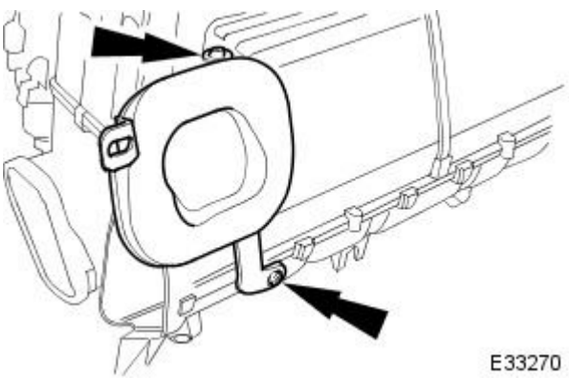

3. Remove evaporator pipe firewall seal plate.
   - Remove screws.
   - Remove plate.

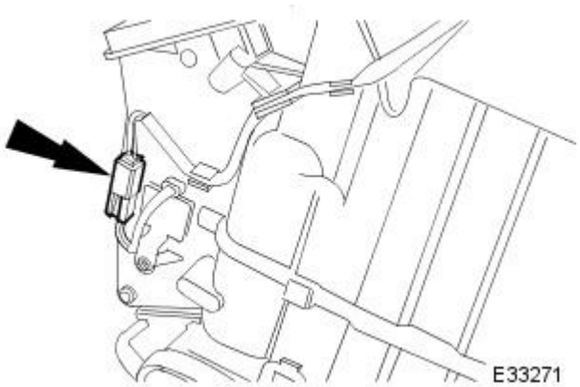

4. Disconnect heater matrix temperature sensor.
   - Detach heater matrix temperature sensor connector from unit.
   - Disconnect connector.

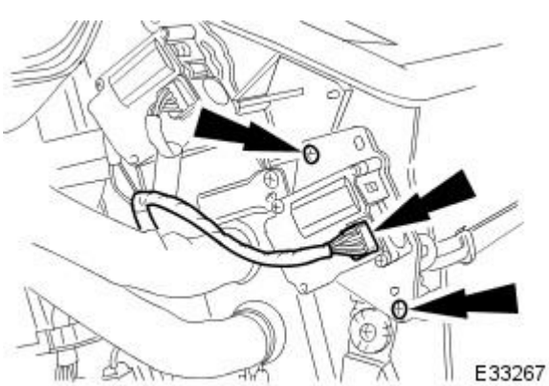

5. Remove footwell servo motor from heater / cooler unit.
   - Disconnect connector.
   - Remove screws.
   - Remove motor complete with bracket.

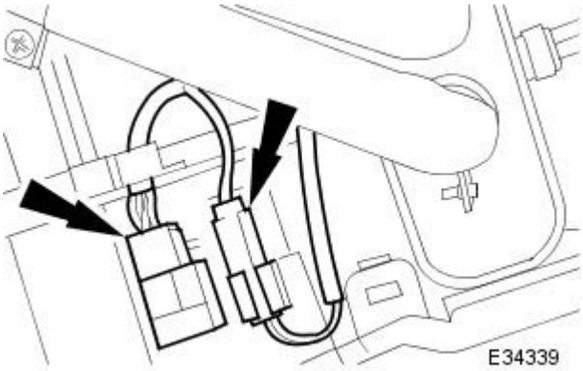

6. Disconnect evaporator sensor connector.

- Detach heater / cooler unit connector.
- Detach evaporator sensor connector.
- Disconnect connector.

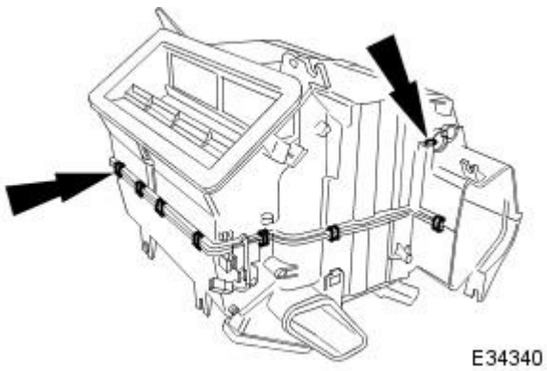

7. Remove heater / cooler unit upper case from lower case.

- Remove screw.
- Remove 15 clips.
- Remove upper case from lower case.

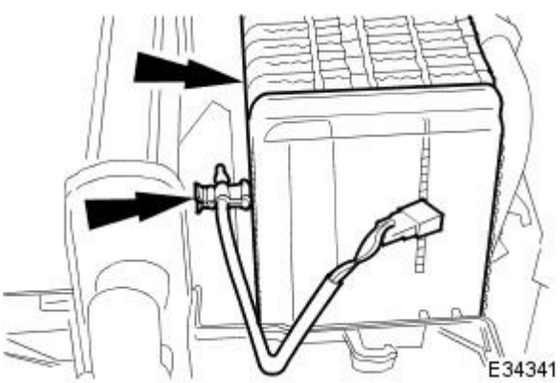

8. Remove evaporator from case.

- Remove sensor and clip.
- Remove evaporator.

Installation

1. Installation is the reverse of removal.

Air Conditioning - Pressure Cutoff Switch

Removal and Installation

Removal

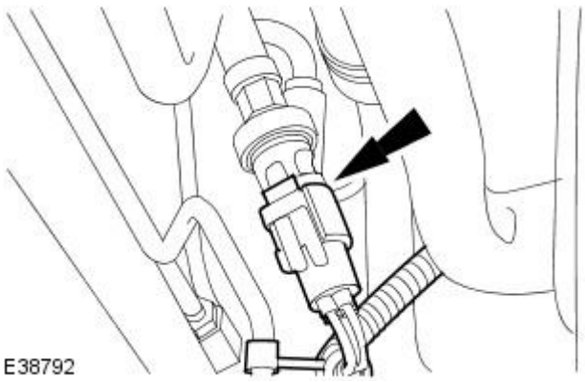

1. Raise and support the vehicle.
   For additional information, refer to Section 100-02 Jacking and Lifting.
2. Disconnect the pressure cutoff switch electrical connector.

3. Remove the pressure cutoff switch.
   - Remove and discard the pressure cutoff switch O-ring seal.

Installation

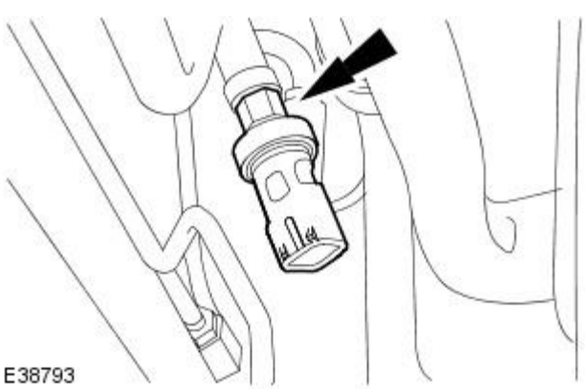

1. NOTE: Install a new pressure cutoff switch O-ring seal.

• NOTE: Lubricate the new O-ring seal with A/C refrigerant oil.

Install the pressure cutoff switch.

1. Tighten to 8 Nm.

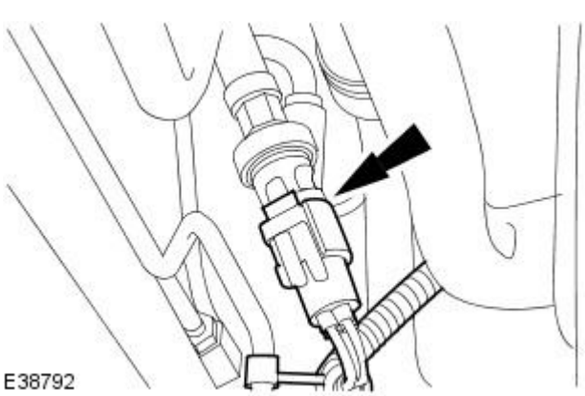

2. Connect the pressure cutoff switch electrical connector.

3. Carry out the A/C system flourescent dye leak detection procedure.
   For additional information, refer to Section 412-00 Climate Control System - General Information.

Air Conditioning - Receiver Drier

Removal and Installation

Removal

1. Carry out the air conditioning (A/C) system recovery procedure.
   For additional information, refer to Section 412-00 Climate Control System - General Information.
2. Remove the air cleaner assembly.
   For additional information, refer to Section 303-12 Intake Air Distribution and Filtering.
3. NOTE: Cap the exposed ports.

   Disconnect the receiver drier lines.

   - Remove and discard the O-ring seals.

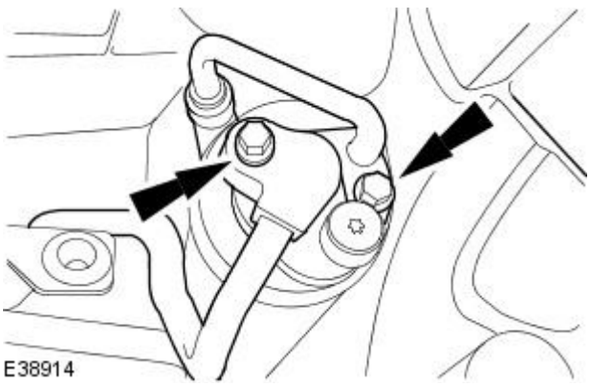

4. NOTE: Loosen but do not remove the retaining bolt.

   Remove the receiver drier.

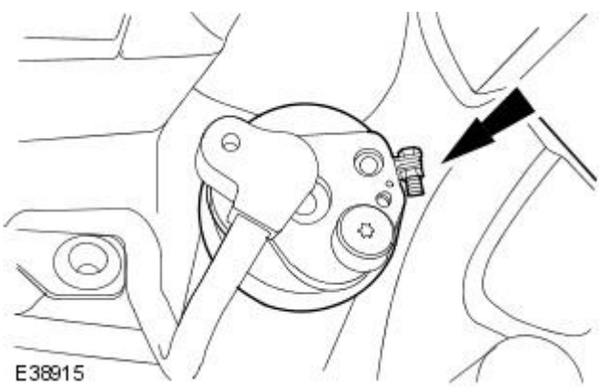

Installation

1. Tighten to 10 Nm.

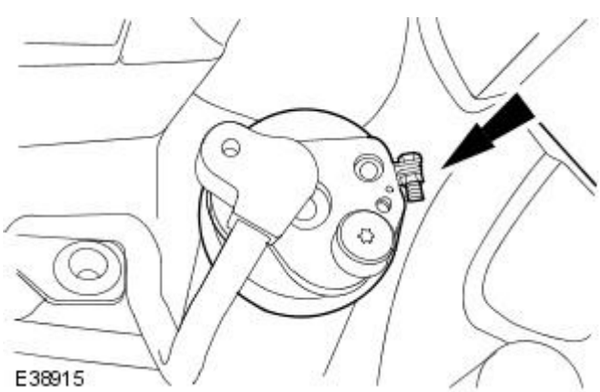

2. NOTE: Uncap the exposed ports.

• NOTE: Install new O-ring seals.

   Tighten to 10 Nm.

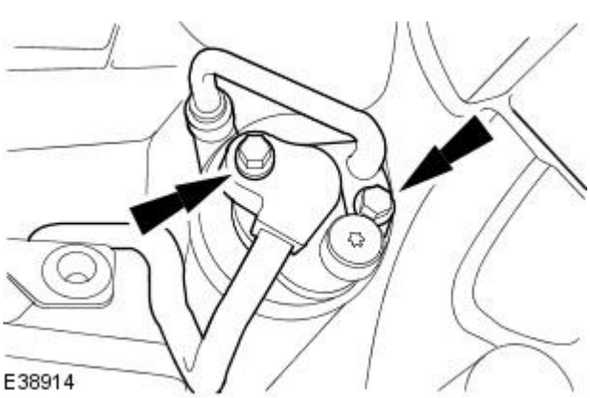

3. Install the air cleaner assembly.

For additional information, refer to Section 303-12 Intake Air Distribution and Filtering.

4. Carry out the A/C system evacuation and charging procedure. For additional information, refer to Section 412-00 Climate Control System - General Information.

Published: 11-May-2011

Control Components - Control Components

Description and Operation

System Controls

The climate control system is controlled by :

1. **1.** Manual input from the operator, via the center console located control panel.
2. **2.** Automatically by means of the A/CCM.

Output is based upon input from the following devices:

- Motorized In-car aspirator
- External air temperature sensor
- Coolant temperature sensor
- Heater 'air-off' (the temperature of the air leaving the matrix fins) temperature sensor
- Evaporator 'air-off' (the temperature of the air leaving the evaporator fins) temperature sensor
- Solar sensor
- Left hand blower recirculation / fresh air flap potentiometer
- Right hand blower recirculation / fresh air flap potentiometer
- Upper air distribution box (ADB) center and side face flap servomotor potentiometer
- ADB defrost flap servomotor potentiometer
- Air conditioning unit Foot flap servomotor potentiometer
- Air conditioning unit Cool Air Bypass flap servomotor potentiometer
- Center vent assembly temperature differential potentiometer
- Thumbwheel controls on the facia vent assemblies which provide manual adjustment of the airflow volume.
- Road and engine speed signals input to the A/CCM

Climate Control Panel

Communication between the control panel and the A/CCM is via a serial data communications link.

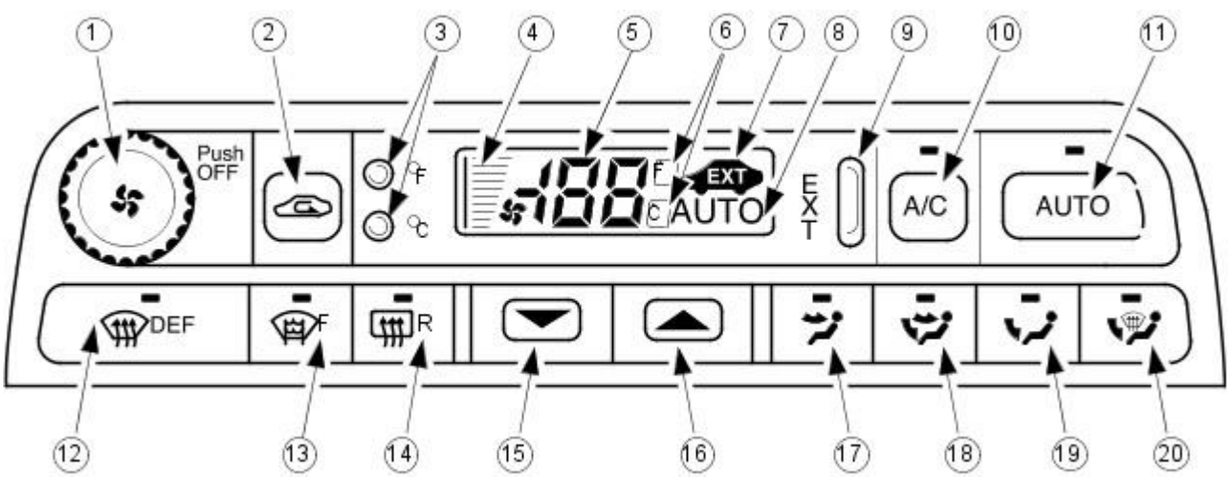

E35383

Switching the Climate Control system ON

The climate control system can be switched ON by pressing one of the following :

Ref #1 On / Off (resumes the system on in the previous settings).

Ref #10 A / C (resumes the system on in the previous settings).

Ref #11 AUTO (resumes the system on at the previous temperature setting).

Ref #12 DEF (resumes the system on at the previous temperature setting).

Button (switch) logic

All buttons with an integral LED state lamp conform to the following operating logic.

When the state lamp is lit the relevant function is operational. From this condition, pressing the button will de-activate the function, confirmed by the LED being de-energized and the presence of a single audible 'beep'. A single 'beep' will accompany the state lamp to confirm function re-selection.

1. **1.** ON / OFF and manual fan speed.

Pressing this knob activates the system ON at the last setting or switches the system OFF. Rotate the knob clockwise to increase and anti-clockwise to decrease fan speed and thus airflow.

With the system OFF, ram air is available by the selected air distribution mode (indicated by state lamp). Air flow will NOT occur unless a manual air distribution mode is selected, this air being unconditioned and flow dependent upon vehicle speed.

• NOTE: The blowers are inhibited until the engine coolant temperature is > 35°C, unless DEFROST is selected.

2. **2.** Manual Air Recirculation

Closes the outside air intakes of the blower assemblies and recirculates air within the vehicle.

Two options of control are available :

- Timed Recirculation. Pressing the button for less than 1.5 seconds lights up the LED (confirmed by a single bleep). This provides recirculation of interior air for a period of approximately 5 minutes. Pressing the button within five minutes returns the system to fresh air intake mode.
- Continuous Recirculation. Pressing and holding the button for more than 1.5 seconds lights up the LED (confirmed by two beeps). This provides continuous recirculation of interior air. Pressing the button returns the system to fresh air intake mode.

• NOTE: Avoid using manual air recirculation for prolonged periods in cold weather, this may result in interior misting of glass.

3. **3.** Temperature Scale Selection

Press the appropriate button to display temperatures in degrees Celsius or Fahrenheit.

4. **4.** Manual Fan Speed

Rotating the fan speed control knob (to vary fan speed) will display a proportional number of horizontal bars on the LCD. There are total of eleven manual fan speeds available.

5. **5.** Temperature Display

Indicator of internal demand temperature or external ambient temperature. The external ambient is updated every 4 seconds when the road speed > 25 km / h.

6. **6.** Scale

Selected temperature scale, Celsius or Fahrenheit.

7. **7.** External temperature

Symbol indicates when this option is selected

8. **8.** Automatic

Symbol indicates when the control of, temperature, fan speed and air distribution are all in Auto mode.

9. **9.** External

There are two modes of external ambient temperature selection;

- Quick Display. Pressing the button for <1.5 seconds (confirmed by a single bleep) will display the external temperature for 4 seconds.
- Continuous Display. Pressing and holding the button for >1.5 seconds (confirmed by two beeps) displays the external ambient temperature continuously, the value of which will be updated every 4 seconds given that vehicle road speed is > 25 km/h. Pressing the button again for <1.5 seconds resets to the previous display.

• NOTE: Continuous external temperature display will be cancelled when the ignition is switched OFF but not during engine cranking.

10. **10.** A/C

This push-on / push-off button will either select or deselect (as indicated by the state lamp) the refrigeration system.

The refrigeration system is automatically engaged when the Auto button is pressed.

• NOTE: Interior misting of screens may be reduced by continuous operation of the refrigeration system.

11. **11.** Auto

When selected and the state lamp lit, A/C mode will be operational and control of vent outlet temperature, fans speed and air distribution will be automatic.

AUTO mode will disengage should manual air distribution or defrost buttons be operated or the manual fan speed knob be rotated.

• NOTE: Automatic temperature control is constantly maintained irrespective of selected manual overrides.

12. **12.** Defrost

Push-on push-off button, which when engaged will direct all air to the front and side glass at maximum fan speed. The heated windshield (if fitted) will also be energized for a timed cycle of 6,5 minutes, but may be cancelled by pressing the HEATED WINDSHIELD (F) button. Pressing 'DEF' again will return to the last setting with automatic temperature control being maintained.

Directing warm and humid air onto a cold screen can produce interior misting of screens. Operating the climate control system without the refrigeration system operating will exacerbate this problem.

• NOTE: Directing cold air onto the screen in warm humid conditions can produce external condensation.

13. **13.** Heated Windshield (F)

Pressing the heated windshield button (where fitted) will energize the electrically heated windshield elements for a timed cycle of 6,5 minutes; pressing the button again will cancel the request. Should the engine stall or the ignition be turned OFF, the timer will be cleared and the function cancelled.

• NOTE: The heated windshield may be activated with the climate control system OFF but the engine must be running.

In very cold ambient temperatures, icing of the interior of the glass is possible when the climate control system is operating in AUTO mode; to reduce this possibility the A/CCM provides automatic operation of the heated windshield.

With the following conditions met, the heated windshield will automatically energize but the state lamp will NOT be lit.

- External temperature < 0 °C
- Vehicle speed > 48 km / h
- The first two conditions exist > 2 minutes.
- Engine speed > 50 revs / min

14. **14.** Heated Backlight (R)

Pressing the heated backlight button will simultaneously energize the heater elements for timed cycles of;

- 21 minutes backlight

- 11 minutes exterior mirrors

Pressing the button again within the 21 minute timer will cancel the request.

If the engine is stalled, or the ignition switched OFF, the backlight and door mirror timers will be cleared, resulting in both functions being switched off.

• NOTE: Both the backlight and door mirrors may be activated with the climate control system OFF, but the engine must be running.

15. **15.** Temperature Decrease

Pressing this button (BLUE symbol) decreases the interior temperature setting in 1° increments. Should the button be pressed when the setting temperature is below the lower automatic control temperature limit, the display will indicate 'LO'.

16. **16.** Temperature Increase

Pressing this button (RED symbol) will raise the temperature setting in 1° increments Should the button be pressed when the setting temperature is above the upper automatic control temperature limit, the display will indicate 'HI'.

Automatic Temperature Control Range

°C	°F
LO	LO
17	61 62
18	63 64
19	65 66
20	67 68
21	69 70
22	71 72
23	73 74
24	75 76
25	77 78
26	79 80
27	81 82
28	83 84
29	85 86
30	87 88
31	89 90
HI	HI

LO demands the maximum COOLING performance from the system with the blowers operating automatically at maximum speed.

HI demands the maximum HEATING performance from the system with the blowers operating automatically at maximum speed.

Pressing and holding either temperature selection button continuously changes the setting temperature by steps of 1°, every 0.4 seconds.

• NOTE: The interior temperature does not change when the temperature scale is changed between Celsius and Fahrenheit, however the temperature display will change to the nearest equivalent number.

Examples:

- 17C 61F 17C
- 66F 19C 66F

• NOTE: When operating in HI or LO mode and the AUTO button is pressed, the system will adopt the nearest automatic control temperature setting:

- LO AUTO DISPLAY INDICATES 17° C or 61° F
- HI AUTO DISPLAY INDICATES 31° C or 90 ° F

• NOTE: When switching the system on using the AUTO button, the system will display the previous temperature setting, except under the following conditions:

- LO, system OFF, auto display indicates 17° C or 61° F
- HI, system OFF, auto display indicates 31° C or 90° F

17. **17.** Face

Pressing this button will direct all airflow to the center and side face vents only; pressing again will return the system to automatic control mode.

• NOTE: When in AUTO mode and in a hot climate, a bleed of cold air is delivered to foot level. This bleed automatically shuts off when the interior temperature has cooled sufficiently.

18. **18.** Bi-Level

This push-on / push-off button will direct air to the center and side face vents and the front footwells. Pressing the button (off) will return the system to automatic control mode.

19. **19.** Foot

This push-on / push-off button will direct the majority of airflow to the front footwells with a small bleed of air to the front and side screens. Pressing the button (off) will return the system to automatic control mode.

20. **20.** Demist

Pressing this button will direct air to the front and side screens and the front footwells. Pressing the button (off) will return the system to automatic control mode.

Fascia (Center) Air Outlets

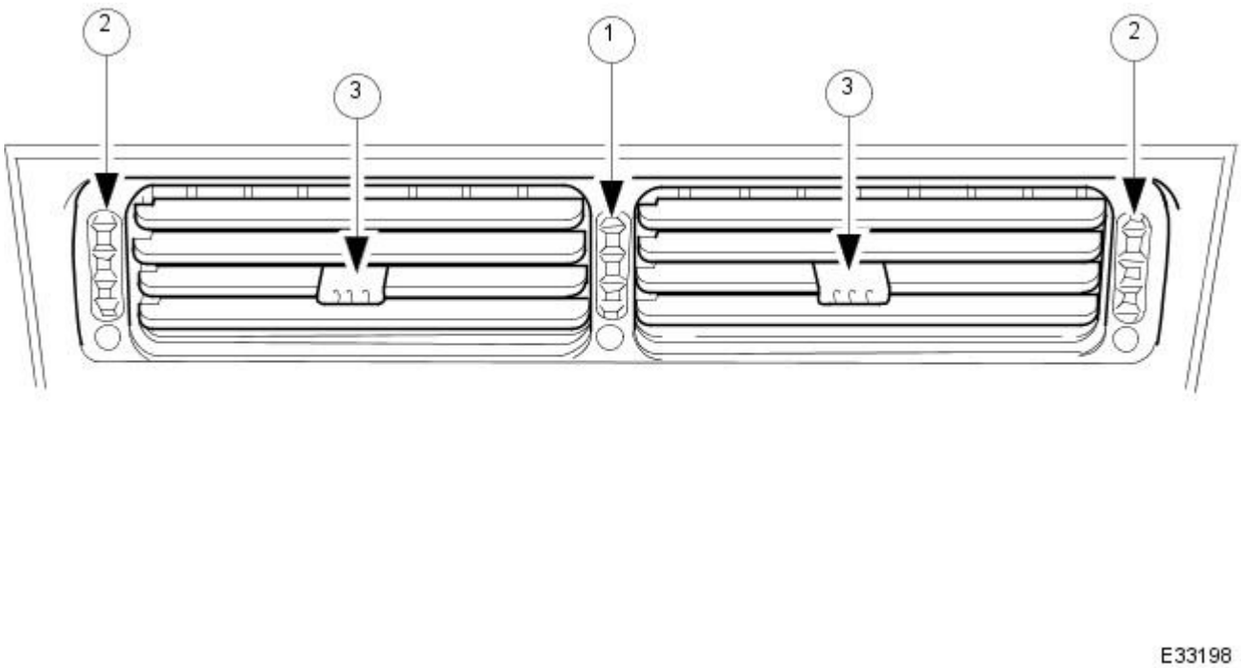

Parts List

Item	Part Number	Description
1	—	Temperature differential control
2	—	Airflow control
3	—	Air direction control

The center vent assembly incorporates the Temperature Differential control thumbwheel. This control provides adjustment of the outlet air temperature from the center and end of dash vents (EOD), relative to the foot duct air temperature. The air temperature from the face vents air will increase when the thumbwheel is rotated upwards and decrease when rotated downwards.

• NOTE: The face level air temperature is always cooler than the foot air temperature and the temperature differential control ONLY operates when the system is in AUTO or manual Bi-Level mode.

Only the center face air vent assembly incorporates the three listed controls; the EOD vents, not shown, only feature items 2 and 3.

Automatic Operation

Initial setting

Should a new A/CCM be fitted, it will 'power-up' in the OFF mode; switching ON will result in the following settings:

Feature	Status
Setting temperature	24°C or 75°F
LH and RH blower assembly recirculation / fresh flap	Fresh mode
Control mode	Automatic 'AUTO' displayed
Blower	Auto
Compressor output	A/C ON
Heated windshield and mirrors	OFF
Water valve	Auto temperature control

After initial start up the system operating conditions will be stored in the A/CCM to the conditions which prevailed prior to ignition OFF.

Maximum Heating / Cooling

Maximum Heating (temperature setting HI)

Item	Control	Override Allowed
Water valve	Fully open (not energised)	-
Blower	Maximum	Yes
Fresh / recirc	Fresh	Yes
Air distribution	Feet (state lamp OFF)	Yes
A/C system	OFF	Yes
Cool air by-pass	Fully closed	-

Maximum Cooling (temperature setting LO)

Item	Control	Override Allowed
Water valve	Fully closed (energised)	-
Blower	Maximum	Yes
Fresh / recirc	Recirculation	Yes
Air distribution	Face (state lamp OFF)	Yes

Item	Control	Override Allowed
A/C system	ON	Yes
Cool air by-pass	Fully open	-

Air Conditioning Control Module (A/CCM)

Location

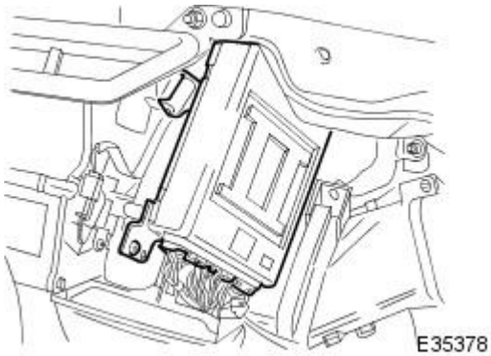

The A/CCM is located on the right hand side of the air conditioning unit and controls all system functions.

The temperature within the passenger compartment is continually compared with the temperature selected on the control panel LCD. The A/CCM receives data input signals and compares these with signals from the system temperature sensors and feedback devices. Based on this information the A/CCM adjusts the air outlet temperature, airflow and distribution from the air conditioning system into the passenger compartment.

Identification

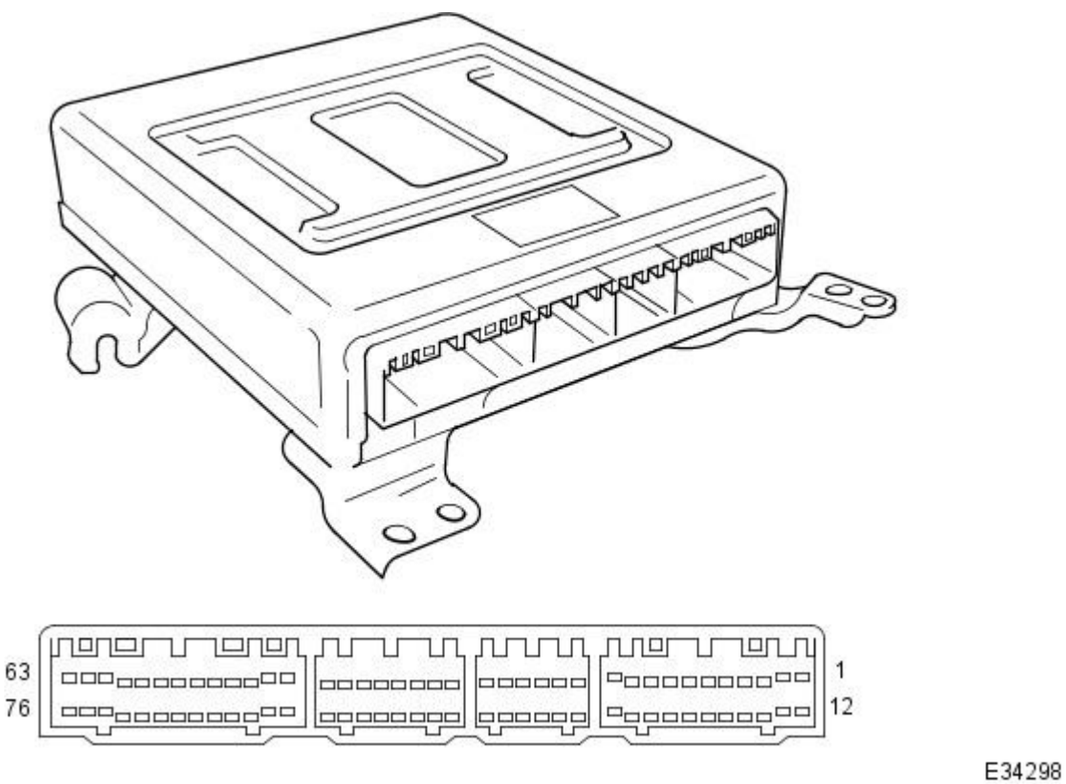

Inputs / Outputs

1. **1.** Engine speed:

- Input to the A/CCM from the ECM.
- Heated windshield and backlight will be inhibited when engine speed < 50 RPM.

2. **2.** Vehicle speed:

- Input from the instrument cluster.
- Blower speed control to minimise the effects of ram air. Road speed compensation is inhibited when maximum cooling LO, or maximum heating HI, is selected; also inhibited in defrost mode with airflow set to maximum.
- Used to determine the frequency at which the exterior temperature display is updated.

3. **3.** Coolant temperature (signal derived from ECM via instrument cluster):

- Input from the heater matrix temperature sensor used to control water valve and thus vent temperatures.
- Used to monitor the temperature of coolant at the heater matrix to assist the control of air outlet temperature.
- Used to inhibit the blowers when heating is selected and the engine coolant temperature is below 30°C.
- Is used to provide progressive increase in blower speed up to 60°C.
- To inhibit the water valve and pump when the coolant temperature is = < 10°C

4. **4.** Compressor ON signal:

- Input to the A/CCM from the compressor relay output.

- Used to determine compressor fault conditions.

Sensors and Controls

Solar Sensor

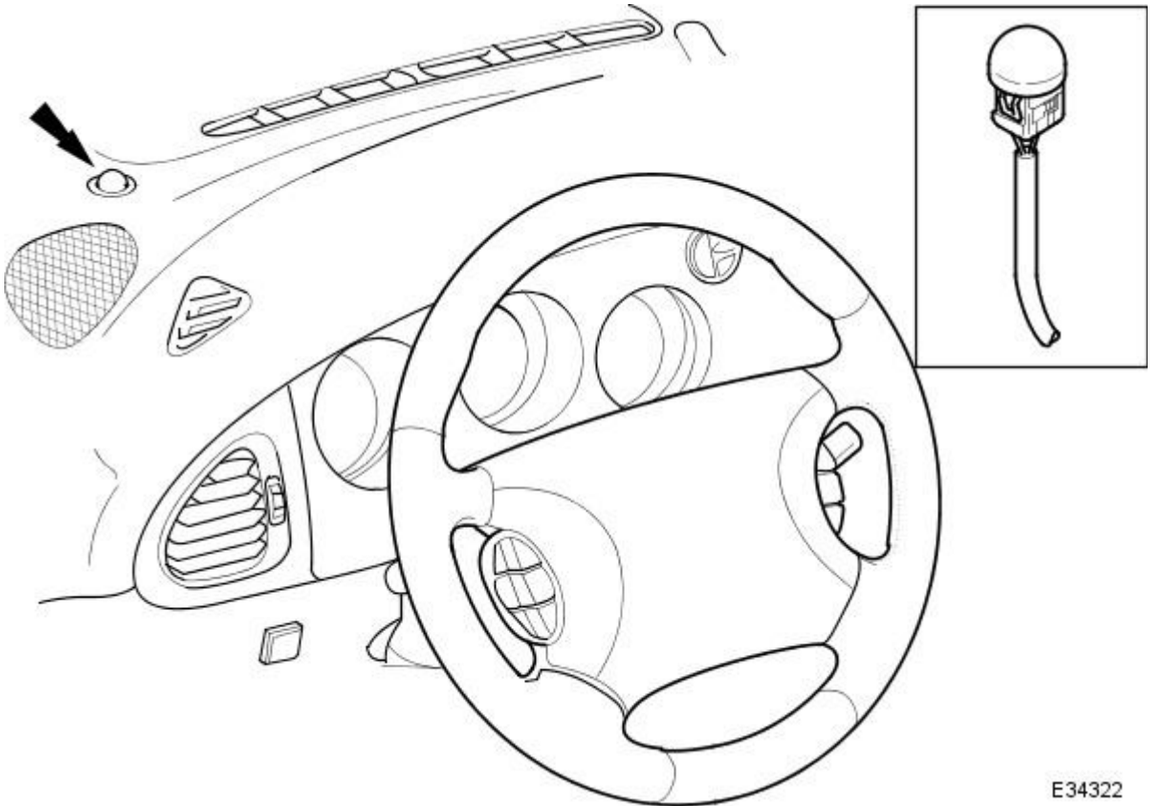

The solar sensor is mounted on the top surface of the fascia between the driver's defrost grille and speaker grille.

The sensor is a photo-diode which is calibrated to measure direct sunlight. It provides an output signal to the A/CCM which automatically reduces air temperature and increases fan speed (airflow volume) to compensate for solar heating.

Evaporator Sensor

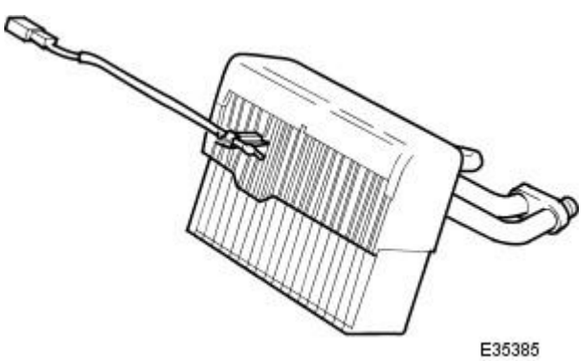

This thermistor device changes electrical resistance as a result of temperature variations.

The sensor is positioned next to the evaporator fins and measures air temperature after it has passed through the evaporator. The sensor inputs a signal to the A/CCM which controls the compressor (see table) when the refrigeration system is operating.

The sensor's connector is located on the LH side of the air conditioning unit, in front of the main power connector.

Evaporator Temperature Signal	Compressor State
3°C	ON - clutch engaged
2°C	OFF - clutch disengaged

The A/CCM disengages the compressor clutch when the temperature of the air off the evaporator is 2° C or less. This is to prevent the moisture which may collect between the cooling fins of the evaporator from freezing and thus restricting airflow.

Heater Matrix Temperature Sensor

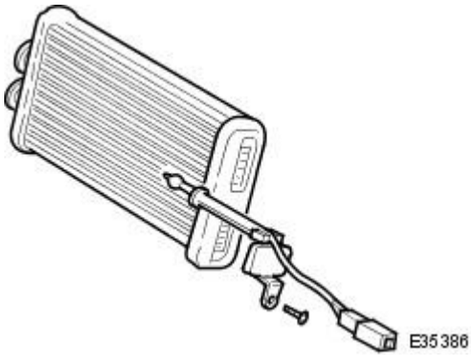

The heater matrix temperature sensor is a thermistor which changes its electrical resistance in response to changes in air temperature converting a temperature rating to an electrical signal.

The sensor connector is located on the RH SIDE of the air conditioning unit. The sensor bead is located inside the unit down-stream from the heater matrix and measures the 'post-heater' air temperature, before the air is distributed to the cabin The sensor provides a signal to the A/CCM which adjusts the duty ratio of the water valve to provide the required air temperature from the heater.

Ambient Temperature Sensor

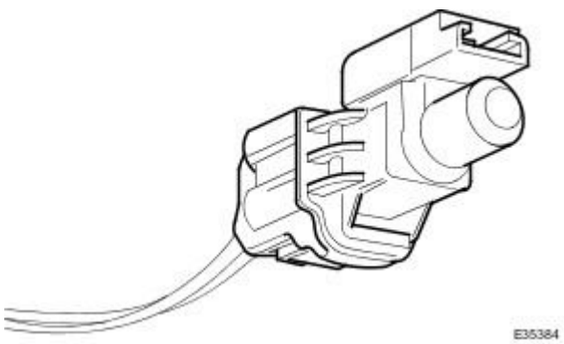

The sensor is a thermistor which changes its electrical resistance in response to changes in air temperature, converting a temperature rating to an electrical signal.

The ambient temperature sensor measures exterior air temperature and is mounted on the RH horn bracket which is located on the front bumper beam.

The signal from the ambient sensor allows the A/CCM to compensate for the ambient conditions and to display the information on the control panel - updated every four (4) seconds.

Sensor response is 'damped' by the A/CCM and therefore does not appear to react to temperature changes as quickly as the other sensors. This feature prevents the effects of sudden changes in air outlet temperatures due to factors such as:

- Recirculating air from the engine cooling pack at low vehicle speeds
- Sudden changes in ambient temperature
- The effects of water splash

Motorised In-car Aspirator.

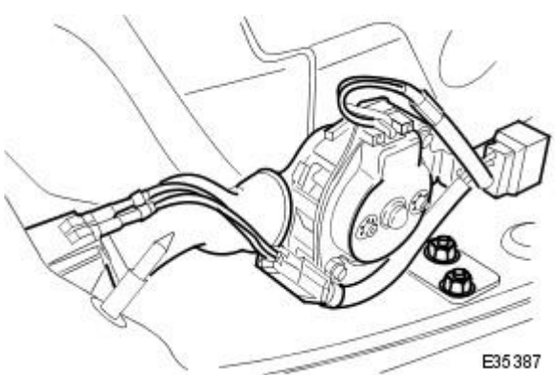

Cabin air is drawn through a grille (located near the steering column on the knee bolster) over a thermistor. Remotely mounted from the thermistor is the motorised aspirator with a rubber hose which connects both components.

The electrical resistance of the thermistor changes in response to variations in air temperature and converts this temperature rating into an electrical signal; the signal is used by the A/CCM to adjust the temperature, airflow and air distribution from the air conditioning unit.

Coolant Temperature Signal.

This signal is supplied to the A/CCM from the instrument cluster, the input being required to:

- Provide blower inhibit control , to avoid the system in heating mode delivering cold air when the coolant temperature is below 35C unless DEFROST is selected.
- To progressively increase the fan speed up to maximum blower speed during warm up control.
- To assist in the control of the outlet temperature.
- To avoid possible pump or valve damage caused by ice particles in the coolant.

Compressor ON Signal.

This signal monitors the compressor relay to confirm the compressor operating state and so provide relevant fault information.

Servo Motor Control.

Flap position, which directs the flow of air through the system, is controlled by servo motors; these may be driven in either a clockwise or anti-clockwise direction by signals from the A/CCM. Motor, thus flap position, is monitored via a feedback potentiometer which is situated within the motor housing.

Servo motors control the following flaps:

- RH and LH Air Intake (Fresh / Recirc)
- Center Vent
- Defrost
- Foot
- Cool Air Bypass

Blower Motor Control.

The A/CCM controls the speed of two blower motors which deliver airflow to the air conditioning unit. The blower motors are regulated by power transistor modules which provide a linear variation of blower speed.

Relationship Manual Control Blower Speed / Voltage

• NOTE: Blower motors are inhibited when the engine coolant temperature is below 35C and heating is demanded, unless DEFROST is selected.

Blower Mode	Display Output - No of Bars	Blower Motor Voltage (V)
OFF	Nil	0.0
Manual LO	1	4.00
	2	4.33
Manual M1	2	4.67
	3	5.00
Manual M2	3	5.33
	4	5.67
	4	6.00
Manual M3	4	6.33
	5	6.67
Manual M4	5	7.00
	6	7.33
	6	7.67
Manual M5	6	8.00
	7	8.33
	7	8.67
Manual M6	7	9.00
	8	9.33
	8	9.67
Manual M7	8	10.00
	9	10.33
Manual M8	9	10.67
	10	11.00
Manual M9	10	11.33
	11	11.67
Manual HI and DEFROST	11	12.00

Control Components - Control Components

Diagnosis and Testing

Connector Pins Identification

Connector Pin Identity Chart for AC001

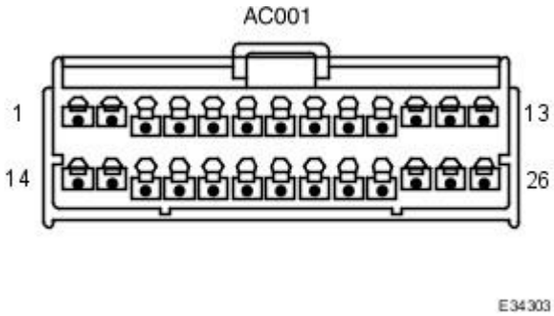

Pin Number	Circuit	Circuit Function
001		Compressor ON signal
002		Coolant valve
003		RH Blower motor relay
004		Heated windshield relays (where fitted)
005		Heated door mirror relay
006		Defrost servomotor (positive)
007		Center vent servomotor (positive)
008		LH air intake servomotor fresh / recirculation (positive)
009		RH air intake servomotor fresh / recirculation (positive)
010		Not used
011		Not used
012		Foot servomotor (positive)
013		Cool air bypass servomotor (positive)
014		Not used
015		Not used
016		LH Blower motor relay
017		Coolant pump motor relay
018		Heated backlight relay
019		Defrost servomotor (negative)
020		Center vent servomotor (negative)
021		LH air intake servomotor fresh / recirculation (negative)
022		RH air intake servomotor fresh / recirculation (negative)
023		Not used
024		Not used
025		Foot servomotor (negative)
026		Cool air bypass servomotor (negative)

Connector Pin Identity Chart for AC002

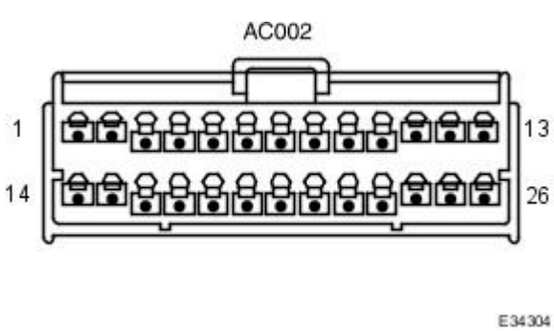

Pin Number	Circuit	Circuit Function
001		Solar sensor
002		Center vent servomotor feedback potentiometer
003		RH air intake servomotor feedback potentiometer fresh / recirculation
004		Not used
005		Cool air bypass servomotor feedback potentiometer
006		Coolant temperature signal
007		RH blower motor voltage feedback
008		RH blower motor drive signal
009		Differential potentiometer
010		Defrost servomotor feedback potentiometer
011		LH air intake servomotor feedback potentiometer fresh / recirculation
012		Not used
013		Foot servomotor feedback potentiometer
014		Not used
015		LH blower motor voltage feedback
016		LH blower motor drive signal

Connector Pin Identity Chart for AC003

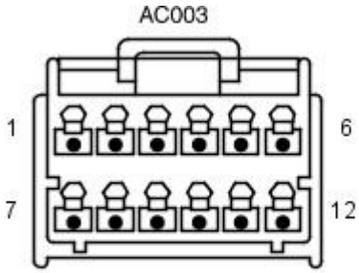

E34305

Pin Number	Circuit	Circuit Function
001		Screen request to ECM
002		CLOCK signal to control panel
003		DATA OUT signal to control panel
004		Compressor lock signal
005		Exterior air temperature sensor
006		Heater matrix temperature sensor
007		DATA IN signal from control panel
008		START signal to control panel
009		Not used
010		Compressor lock select
011		In-car temperature sensor
012		Evaporator temperature sensor

Connector Pin Identity Chart for AC004

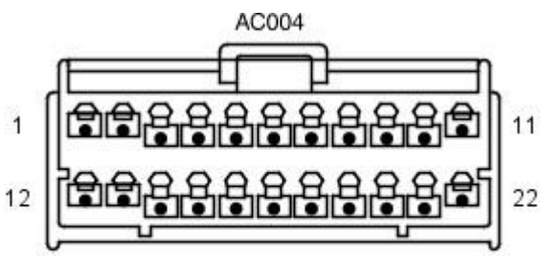

E34306

Pin Number	Circuit	Circuit Function
001		Ignition positive supply
002		Battery isolate supply
003		Auxiliary ground
004		Auxiliary ground to control panel
005		Battery supply
006		Engine speed input
007		Electrical load drive inhibit
008		+5V sensors
009		Clutch request to ECM
010		Diagnostic L-line
011		Not used
012		Ignition (positive) to control panel
013		System ground
014		Ground to control panel
015		Air conditioning isolation relay
016		Vehicle speed
017		Pressure switch
018		Aspirator motor (In-car sensor)
019		Sensor ground
020		Logic ground for diagnostic lines
021		Diagnostic K-line
022		Not used

Connector Pin Identity Chart for FC043

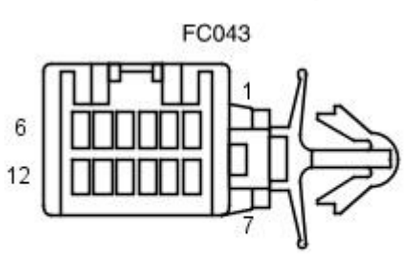

E34307

Pin Number	Circuit	Circuit Function
1		Input CLOCK

Pin Number	Circuit	Circuit Function
2		Input START
3		Input DATA IN
4		Output DATA OUT
5		Input ignition (positive)
6		Input auxiliary (negative)
7		Ground
8		Dimmer
9		Dimmer override
10		Not used
11		Not used
12		Not used

Control Panel Communication

The control panel provides operator interface with the climate control system.

Control panel operation is described in detail in the D section.

Control Panel Inputs / Outputs

Pin #	Description	Cable color
1	Output clock	Slate
2	Output start	Slate / Red
3	Input data in	Slate / Yellow
4	Output data out	Slate / Green
5	Output ignition positive	White / Red
6	Output auxiliary positive	White / Blue
7	Output ground	Black
8	Dimmer	Red
9	Dimmer override	Red / Green
10	Not used	n/a
11	Not used	n/a
12	Not used	n/a

A/CCM Connections

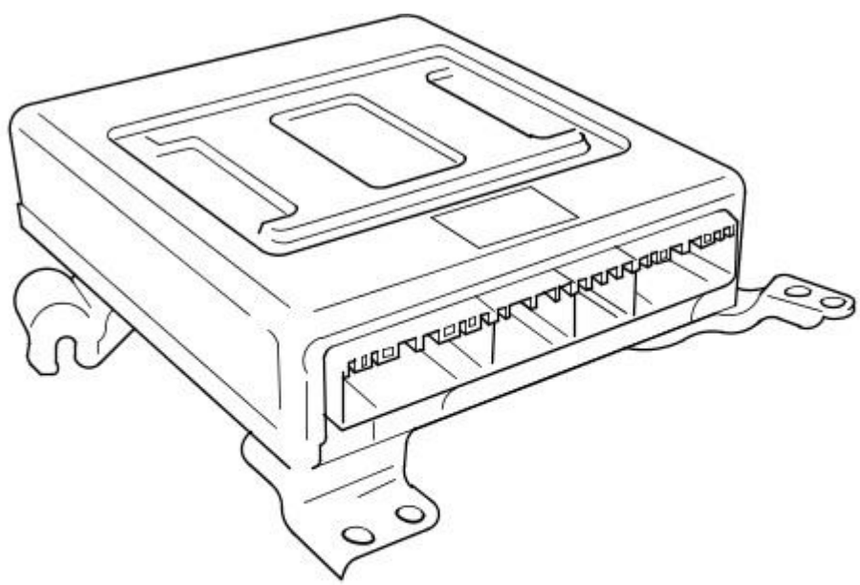

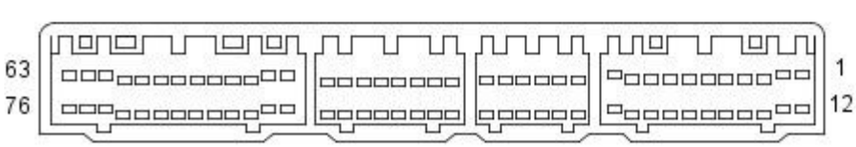

E34298

Pin #	Input / Output	Function	Specification
1 (22-way)	Input	Ignition positive supply	With ign ON
2 (22-way)	Input	Battery isolate supply	Activated when IGN ON and for 30 seconds after IGN OFF
3 (22-way)	Input	Auxiliary ground	Auxiliary switch closed to ground
4 (22-way)	Output	Auxiliary ground	Direct line to pin #3
5 (22-way)	Input	B+	
6 (22-way)	Input	Engine speed input	Open collector, 3 pulses per rev.
7 (22-way)	Input	Electrical load drive inhibit	Active low signal from EMS
8 (22-way)	Output	Sensor +5V	
9 (22-way)	Output	Clutch request	Open collector R = 1KOHM, connected to IGN, activated high
10 (22-way)	Input	Diagnostic L line	
11 (22-way)	n/a	Not used	n/a

Pin #	Input / Output	Function	Specification
12 (22-way)	Output	Ignition (+VE) to control panel	
13 (22-way)		System ground	
14 (22-way)	Output	Ground to control panel	
15 (22-way)	Output	Isolation relay	Activated when IGN ON and for 30 seconds after IGN OFF
16 (22-way)	Input	Vehicle speed input	
17 (22-way)	Input	Pressure switch	Ground for normal pressure. IGN+ for abnormal pressure
18 (22-way)	Output	Aspirator motor (Motorized In-car Aspirator)	0.05A at 12V, activated high during ON mode only
19 (22-way)	Input	Sensor ground	
20 (22-way)		Logic ground for diagnostic lines	
21 (22-way)	Output	Diagnostic K line	
22 (22-way)	Output	Water pump ground	Sensing cct current signal
23 (12-way)	Output	Screen request to ECM	Open collector R = 57OHM, connected to IGN, activated low
24 (12-way)	Output	CLOCK signal to control panel	Open collector R = 1KOHM, connected to IGN, activated high
25 (12-way)	Output	DATA OUT signal to control panel	Open collector R = 1KOHM, connected to IGN, activated high
26 (12-way)	Input	Compressor lock signal	
27 (12-way)	Input	Ambient air temperature sensor	Voltage / temperature values
28 (12-way)	Input	Heater matrix temperature sensor	Voltage / temperature values
29 (12-way)	Input	DATA IN signal from control panel	
30 (12-way)	Output	START signal to control panel	Open collector R = 1KOHM, connected to IGN, activated high
31 (12-way)	Not used		
32 (12-way)	Input	Compressor lock select	Ign. voltage
33 (12-way)	Input	In-car temperature sensor (Motorized In-car Aspirator)	Voltage / temperature values
34 (12-way)	Input	Evaporator temperature sensor	Voltage / temperature values
35 (16-way)	Input	Solar sensor	Voltage / temperature values
36 (16-way)	Input	Centre vent servo motor feedback potentiometer	Resistance 6KOHM ±10% 0% closed - 1V, 100% open - 4V
37 (16-way)	Input	RH air intake servo motor feedback potentiometer	Resistance 6KOHM ±10% 0% closed - 1V, 100% open - 4V
38 (16-way)	Not used		
39 (16-way)	Input	Cool air bypass servo motor feedback potentiometer	Resistance 6KOHM ±10% 0% closed - 1V, 100% open - 4V
40 (16-way)	Input	Coolant temperature signal	PWM signal
41 (16-way)	Input	RH blower motor voltage feedback	
42 (16-way)	Output	RH blower motor drive signal	0V to 3V max.
43 (16-way)	Input	Differential potentiometer	Resistance 10KOHM ±10%. Min. 1V, Max. 4V
44 (16-way)	Input	Defrost servo motor feedback potentiometer	Resistance 6KOHM. ±10%. 0% closed - 1V, 100% open - 4V
45 (16-way)	Input	LH air intake servo motor feedback potentiometer	Resistance 6KOHM ±10%. 0% closed - 1V, 100% open - 4V
46 (16-way)	Not used		
47 (16-way)	Input	Foot servo motor feedback potentiometer	Resistance 6KOHM ±10%. 0% closed - 1V, 100% open - 4V
48 (16-way)	Not used		
49 (16-way)	Input	LH blower motor voltage feedback	
50 (16-way)	Output	LH blower motor drive signal	0V to 3V max.
51 (26-way)	Input	Compressor ON signal	B+ @ compressor ON
52 (26-way)	Output	Water valve	1amp at 12 volts
53 (26-way)	Output	RH Blower motor relay	Load 105OHM at 12V IGN, activated low
54 (26-way)	Output	Heated windshield relays	Load 36OHM at 12V IGN, activated low

Pin #	Input / Output	Function	Specification
55 (26-way)	Output	Heated door mirror relay	Load 105OHM at 12V IGN, activated low
56 (26-way)	Output	Defrost servo motor (+VE)	B+ when operated
57 (26-way)	Output	Centre vent servo motor (+VE)	B+ when operated
58 (26-way)	Output	LH air intake servo motor (+VE)	B+ when operated
59 (26-way)	Output	RH air intake servo motor (+VE)	B+ when operated
60 (26-way)	Not used		
61 (26-way)	Not used		
62 (26-way)	Output	Foot servo motor (+VE)	B+ when operated
63 (26-way)	Output	Cool air bypass servo motor (+VE)	B+ when operated
64 (26-way)	Output	RH High speed relay	Load 105OHM at 12V IGN, activated low
65 (26-way)	Output	LH High speed relay	Load 105OHM at 12V IGN, activated low
66 (26-way)	Output	LH Blower motor relay	Load 105OHM at 12V IGN, activated low
67 (26-way)	Output	Water pump motor relay	Load 105OHM at 12V IGN, activated low
68 (26-way)	Output	Heated backlight relay	Load 72OHM at 12V IGN, activated low
69 (26-way)	Output	Defrost servo motor (-VE)	B+ when operated
70 (26-way)	Output	Centre vent servo motor (-VE)	B+ when operated
71 (26-way)	Output	LH air intake servo motor (-VE)	B+ when operated
72 (26-way)	Output	RH air intake servo motor (-VE)	B+ when operated
73 (26-way)	Not used		
74 (26-way)	Not used		
75 (26-way)	Output	Foot servo motor (-VE)	B+ when operated
76 (26-way)	Output	Cool air bypass servo motor (-VE)	B+ when operated

System Self-test

Control Panel Interrogation Procedure

The control panel has a self-diagnosis feature, and is capable of displaying and clearing stored fault codes.

Climate control is an integrated system, therefore it is recommended that the PDU is used for fault diagnosis. The fault codes displayed with the control panel self-diagnosis feature are not as comprehensive as those of the PDU. The PDU will display the relevant fault code, fault code description and information of the system peripherals at the time the fault occurred.

Fault Code Extraction and Deletion Procedure

Error information is stored in the A/CCM up to a maximum of 5 faults. Should a sensor fault occur there will be an audible beep and the message Er will be displayed on the control panel display for 5 seconds after ignition on. Please note that this will happen only once in any ignition switch cycle. The error source may be accessed by the following procedure

This procedure must be completed through one complete cycle, 1 through 6

Step	Result
#1 Simultaneously hold AUTO and RECIRC - Switch ignition to ON	Display element check
#2 Press AUTO	Display of stored fault (NUMERIC) code. If ZERO appears, there are no stored codes
#3 Press FACE	Scroll through stored faults (maximum of 5)
#4 Simultaneously press FACE and R	Clear stored fault codes (may need to be repeated for each fault)
#5 Press RECIRC (Press FAN to skip actuator check)	Initiate actuator check (Actuator codes 20 through 27 *)
#6 Press FAN	Exit error check mode

• NOTE: * Actuator codes do NOT equate to system fault codes.

• NOTE: Only codes 11, 15 and 21 (see Fault Code Listing) will cause audible beep and 'Er' display.

• NOTE: If '0' is displayed, there are no stored fault codes, wait 30 seconds to allow system self-test.

- The control panel display will flash repeatedly indicating a list of two digit numbers (see table for code analysis).
- Should a code be displayed accompanied by an audible beep, the fault is current and therefore still present within the system. A code displayed without an accompanying 'beep' indicates a fault had previously occurred but is not present within the system.

• NOTE: It is advisable to check all areas indicated with cleared fault codes. Such faults may re-occur if intermittent problems are present in the system.

- To delete stored and cleared fault codes press 'R' and 'FACE' buttons simultaneously.
- After investigating and correcting all stored faults, press the 'Push Off' button to restore normal operation with default panel settings, ie AUTO at 24°C.

Control Panel Fault Code Listing

Control Panel Fault Code Listing

• NOTE: Reference fault code #23*: In ambient temperatures below 0°C, this code may be logged because the low ambient causes a temporary low gas pressure.

• NOTE: Where the ambient temperature rises above 40°C, with the engine close to overheating, electrical feed to the compressor clutch may be cut and code #23 registered.

Symptom	Possible Sources	Action
0 Normal operation no fault codes present	* None	* Wait 30 seconds for system self-check.
11 Motorized in-car aspirator malfunction	* Harness / connector fault * Sensor open / short circuit	* Panel fault codes are not stored for motorized in-car aspirator motor failure.
12 Ambient temperature sensor malfunction	* Harness / connector fault * Sensor open / short circuit	* After rectification, disconnect the vehicle battery for 10 seconds to reset the system.
13 Evaporator temperature sensor malfunction	* Harness / connector fault * Sensor open / short circuit	* Refer to PDU
14 Water temperature input malfunction	* Instrument cluster output	* Refer to PDU
15 Heater matrix temperature sensor malfunction	* Harness / connector fault * Sensor open / short circuit	* Refer to PDU
21 Solar sensor	* Sensor open /short circuit	* Refer to PDU
22 Compressor lock signal fault	* Low refrigerant charge, low compressor oil level, loose drive belt * Harness / connector fault	* Adjust items as required
23 Refrigerant pressure switch malfunction	* Harness / connector fault * Switch open / short circuit	* Refer to PDU
23 Refrigerant pressure low refrigerant charge *	* Leak from damaged pipe or joint	* Rectify as required and recharge system
24 Face vent demand potentiometer fault	* Potentiometer open / short circuit * Harness / connector fault	* Refer to PDU
31 LH fresh / recirc. potentiometer fault	* Harness / connector fault * In certain circumstances the servo motor may over-travel and cause further logged faults. This may be cured, following fault rectification, by cycling the ignition ON-OFF-ON 3 times	* Refer to PDU
32 RH fresh / recirc. potentiometer fault	* Harness / connector fault * In certain circumstances the servo motor may over-travel and cause further logged faults. This may be cured, following fault rectification, by cycling the ignition ON-OFF-ON 3 times	* Refer to PDU
33 Cool air by-pass potentiometer fault	* Harness / connector fault * In certain circumstances the servo motor may over-travel and cause further logged faults. This may be cured, following fault rectification, by cycling the ignition ON-OFF-ON 3 times	* Refer to PDU
34 Defrost vent potentiometer fault	* Harness / connector fault * In certain circumstances the servo motor may over-travel and cause further logged faults. This may be cured, following fault rectification, by cycling the ignition ON-OFF-ON 3 times	* Refer to PDU
35 Centre vent potentiometer fault	* Harness / connector fault * In certain circumstances the servo motor may over-travel and cause further logged faults. This may be cured, following fault rectification, by cycling the ignition ON-OFF-ON 3 times	* Refer to PDU
36 Foot vent potentiometer fault	* Harness / connector fault * In certain circumstances the servo motor may over-travel and cause further logged faults. This may be cured, following fault rectification, by cycling the ignition ON-OFF-ON 3 times	* Refer to PDU
41 LH fresh / recirc. motor fault	* Harness / connector fault * Servo motor seized or sticking * Flap seized or sticking	* Refer to PDU
42 RH fresh / recirc. motor fault	* Harness / connector fault * Servo motor seized or sticking * Flap seized or sticking	* Refer to PDU
43 Cool air by-pass motor fault	* Harness / connector fault * Servo motor seized or sticking * Flap seized or sticking	* Refer to PDU
43 Cool Air by-pass motor fault	* Harness / connector fault * Servo motor seized or sticking * Flap seized or sticking	* Refer to PDU
44 Defrost vent motor fault	* Harness / connector fault * Servo motor seized or sticking * Flap seized or sticking	* Refer to PDU
45 Centre vent motor fault	* Harness / connector fault * Servo motor seized or sticking * Flap seized or sticking	* Refer to PDU
46 Foot vent motor fault	* Harness / connector fault * Servo motor seized or sticking * Flap seized or sticking	* Refer to PDU

Associated Faults

Other conditions which may exist but will NOT log fault codes:

Associated Faults

Symptom	Possible Sources	Action
No heat	* Airlock in system.	* Refer section 303-03 for fill / bleed procedure
	* Heater water pump inoperative * Coolant flow valve stuck closed	* Check operation and circuit

	* Faulty engine coolant thermostat	* Renew as required
One vent failing to open / close	* Broken linkage.	* Renew as required
Poor airflow	* Blower motors - incorrect operation	* Check operation and circuit

Panel Communication Check

The panel communication check verifies the inputs and outputs from the control panel to the A/CCM.

Step	Result
#1 Simultaneously hold FACE and FAN - Switch ignition to ON	Panel communication with FACE, Bi-LEVEL, FOOT, DEMIST, DEFROST and RECIRC lines checked - State lamps will illuminate if all is OK. Unlit state lamp indicates a continuity fault for that specific link
#2 Press ON	Exit check mode

Item	Check LED	Condition
Ignition	Defrost	IGN input at 12V, check LED is illuminated
Auxiliary	Face	AUX input at 12V, check LED is illuminated
Clock	Feet / face	Clock input normal, check LED is illuminated
Start input	Foot	Start input normal, check LED is illuminated
Data out	Screen / foot	Data out input normal, check LED is illuminated
Dimmer override	Recirc.	Dimmer override input ON, check LED is illuminated

Actuator Check Procedure

The system self test procedure drives all the actuator motors, to check their operation. If an actuator is operating incorrectly or operating outside of its limits then a fault code will be present.

Before commencing with the actuator check procedure, ensure the car is operating under normal conditions.

1. **1.** Switch ignition OFF.
2. **2.** Press and hold the RECIRC and AUTO buttons simultaneously, switch ignition ON and run the engine.
3. **3.** All the control panel LEDs and all LCD segments will flash on and off. Any function LED indicator which does not flash on / off suggests a fault condition within that area of the panel or, with the LED.

- Any LCD element which fails to flash on / off indicates a fault within the display element or panel.

4. **4.** Press AUTO
5. **5.** Press RECIRC button to instigate actuator check mode.
6. **6.** Press FACE to cycle through the actuator mode conditions 20 to 27.
7. **7.** Press the FAN button to restore normal operation with default panel settings, ie AUTO @ 24°C.

Actuator Fault Codes

• NOTE: * The water valve operates on a 6 second pulse, ie 3 seconds ON, 3 seconds OFF.

		Outlet							
Code	Blower Level	Centre vent	Foot	Defrost	Cool air by-pass	Fresh / Recirc.	Compressor	Water valve	Water pump
20	0	open	closed	closed	closed	fresh	OFF	closed	OFF
21	1	open	closed	closed	closed	fresh	OFF	closed	ON
22	10	open	closed	closed	open	half open	A/C ON	closed	ON
23	17	bleed	half open	closed	half open	half open	A/C ON	6s pulse *	ON
24	17	bleed	half open	closed	closed	recirc.	A/C ON	6s pulse *	ON
25	23	closed	open	bleed	closed	recirc.	A/C ON	open	ON
26	23	closed	half open	half open	closed	recirc.	A/C ON	open	ON
27	31	closed	closed	open	closed	open	A/C ON	open	ON

Control Components - Air Discharge Temperature Sensor

Removal and Installation

Removal

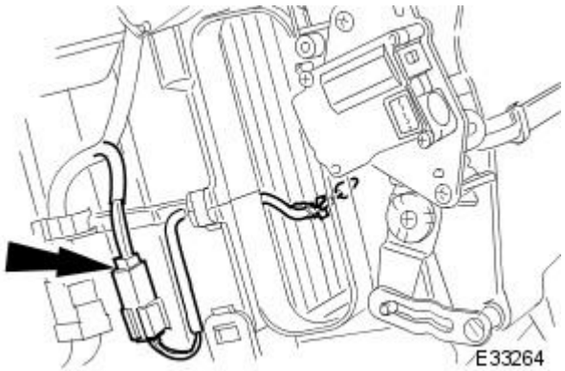

1. Remove heater matrix for access; refer to 82.25.10.
2. Detach sensor connector from heater / cooler assembly.
   - Disconnect connector.

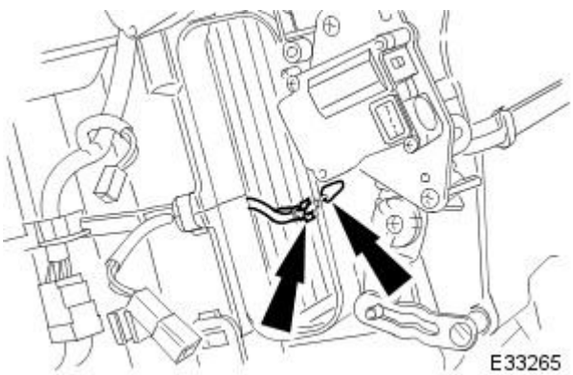

3. Detach clip and sensor from evaporator.
   - Remove clip.

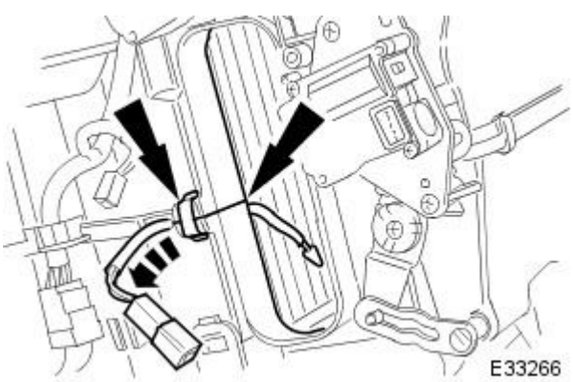

4. Remove sensor from heater / cooler assembly.
   - Remove clip.
   - Lever case apart sufficient enough to withdraw sensor through aperture.

Installation

1. Installation is a reversal of the removal procedure.

Control Components - Climate Control Assembly

Removal and Installation

Removal

1. Remove battery cover and disconnect ground cable from battery terminal. Refer to 86.15.19.
2. Remove 'J' gate surround. Refer to 76.25.24.
3. Remove centre console. Refer to 76.25.01.
4. Remove radio console securing screws and position console for access.

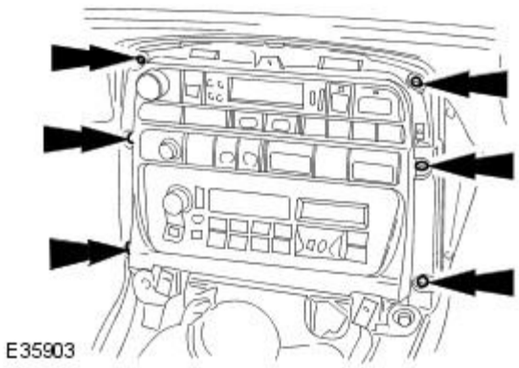

5. Disconnect air conditioning control module harness multiplug and cut and remove securing tie strap.

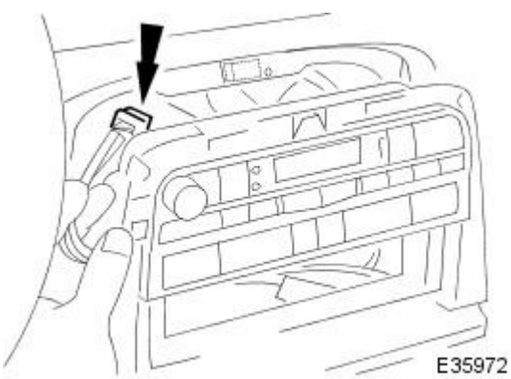

6. Remove remaining switch control module central securing screw and withdraw module from vehicle.

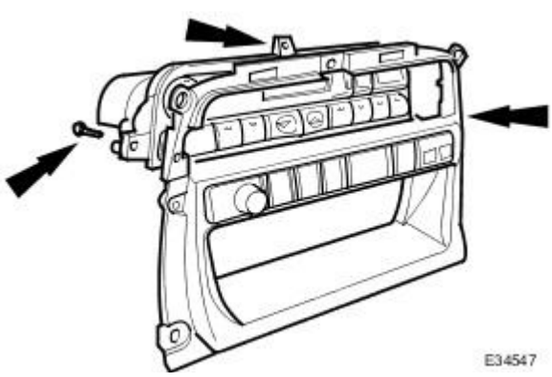

Installation

1. Position air conditioning switch control module on radio console and install module securing screws.
2. Connect switch control module harness multiplug.
3. Install new harness securing tiestrap.
4. Position radio and install console securing screws.
5. Install centre console. Refer to 76.25.01.
6. Install 'J' gate surround. Refer to 76.25.24.
7. Connect ground cable to battery terminal and install battery cover. Refer to 86.15.15.

Control Components - Cold Air Bypass Blend Door Actuator

Removal and Installation

Removal

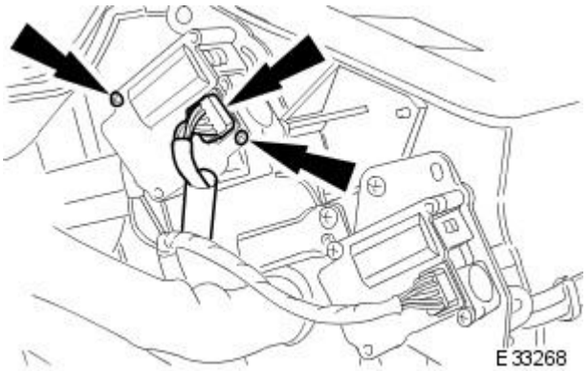

1. Remove instrument panel for access; refer to 76.46.01.90.
2. Remove motor from heater / cooler assembly.
   - Remove connector.
   - Remove screws.
   - Remove motor.

Installation

1. Installation is a reversal of the removal procedure.

Published: 11-May-2011

Control Components - Defrost Vent/Register Blend Door Actuator

Removal and Installation

Removal

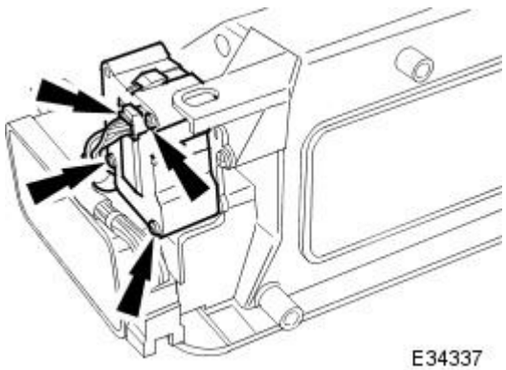

1. Remove air distribution box; refer to 82.20.87.
2. Remove motor from air distribution box.
   - Remove connector.
   - Remove screws.
   - Remove motor.

Installation

1. Installation is a reversal of the removal procedure.

Control Components - Footwell Vent / Duct Blend Door Actuator

Removal and Installation

Removal

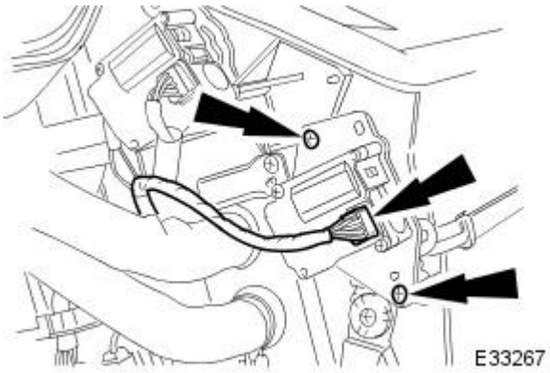

1. Remove instrument panel for access; refer to 76.46.01.90.
2. Remove motor from heater / cooler assembly.
   - Remove connector.
   - Remove screws.
   - Remove motor complete with bracket.
   - Remove motor.

Installation

1. Installation is a reversal of the removal procedure.

Published: 11-May-2011

Control Components - Instrument Panel Blend Door Actuator

Removal and Installation

Removal

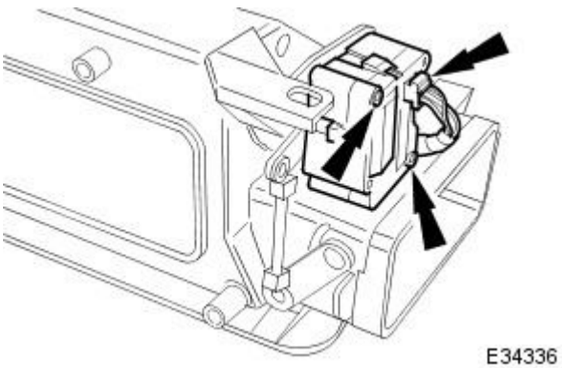

1. Remove air distribution box; refer to 82.20.87.
2. Remove motor from air distribution box.
   - Remove connector.
   - Remove screws.
   - Remove motor.

Installation

1. Installation is a reversal of the removal procedure.

Published: 11-May-2011

Instrument Cluster and Panel Illumination - Instrument Cluster and Panel Illumination

Description and Operation

Details on the Instrument Cluster and Panel Illumination can be found in sections 413-01, 413-06, 413-07 and 413-08.

Published: 11-May-2011

Instrument Cluster and Panel Illumination - High Beam Indicator Bulb

Removal and Installation

Removal

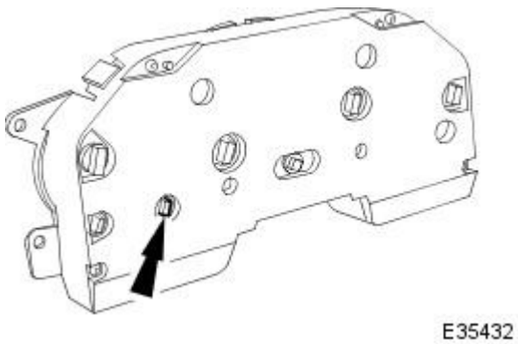

1. Remove major gauge module. Refer to 88.20.24.
2. Position housing for access, rotate bulb holder 1/4 turn counter-clockwise, withdraw holder and remove bulb.

Installation

1. Install bulb in holder.
2. Install bulb holder in housing and rotate 1/4 turn clockwise to fully engage.
3. Install major gauge module. Refer to 88.20.24.

Instrument Cluster and Panel Illumination - Instrument Cluster Bulb

Removal and Installation

Removal

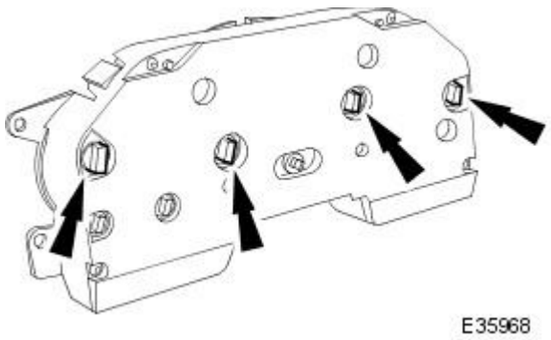

1. Remove major gauge module. Refer to 88.20.24.
2. Position housing for access, rotate bulb holder 1/4 turn counter-clockwise, withdraw holder and remove bulb.

Installation

1. Install bulb in holder.
2. Install bulb holder in housing and rotate 1/4 turn clockwise to fully engage.
3. Install major gauge module. Refer to 88.20.24.

Published: 11-May-2011

Instrument Cluster and Panel Illumination - Instrument Panel Console Instrument Cluster Bulb

Removal and Installation

Removal

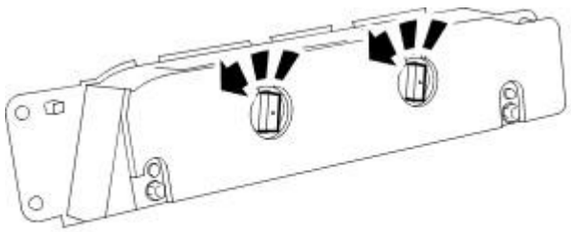

E35969

1. Remove battery cover and disconnect ground cable from battery terminal. Refer to 86.15.19.
2. Remove fascia centre veneer panel. Refer to 76.47.06.
3. Remove minor gauge module. Refer to 88.20.29.
4. Rotate appropriate bulb holder 1/4 turn counter-clockwise, withdraw holder and remove bulb.

Installation

1. Install bulb in holder.
2. Install bulb and holder in module and rotate 1/4 turn clockwise to fully engage.
3. Install minor gauge module. Refer to 88.20.29.
4. Install fascia centre veneer panel. Refer to 76.47.06.
5. Connect ground cable to battery terminal and install battery cover. Refer to 86.15.15.

Instrument Cluster - Instrument Cluster

Description and Operation

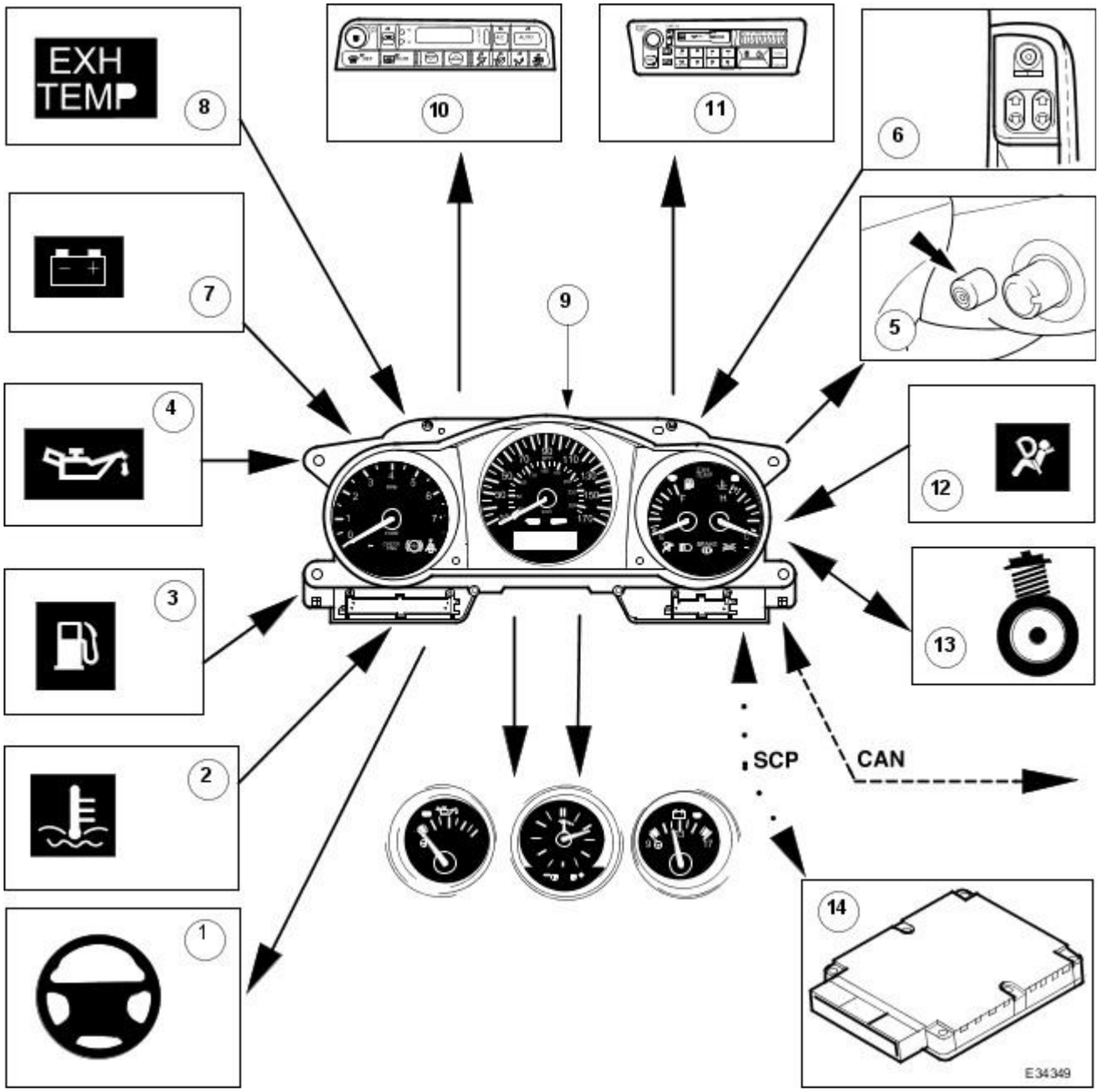

Item	Description
1	Variable Power Steering
2	Coolant Level
3	Fuel Level
4	Oil Pressure
5	Lamp Dimmer
6	Driver's Switchpack (Trip Computer)
7	Generator (Charge Warning Lamp)
8	Catalyst Overheat
9	Instrument Cluster
10	Climate Control (Signal to Module)
11	ICE Head Unit
12	Airbag Circuit Integrity
13	Adaptive Damping
14	Body Processor Module

The Instrument Cluster comprises a Major Cluster and a Minor Cluster, as well as being a primary Electronic Control Module.

The Minor Cluster indicates engine oil pressure and battery state of charge. The Major Cluster provides indications for the speedometer, tachometer, coolant temperature, fuel level, driver information (Message Centre) and warning lamps.

The Major Instrument Cluster also:

- provides input / output information signals for use by other modules.

- acts as a protocol converter (software language translator - the languages used on each network are very similar, but neither can be directly interpreted by the opposite system) for communication between all modules on both the CAN and SCP multiplexed networks. The Instrument Cluster is the only module on the vehicle which communicates between the two networks.

Major Cluster

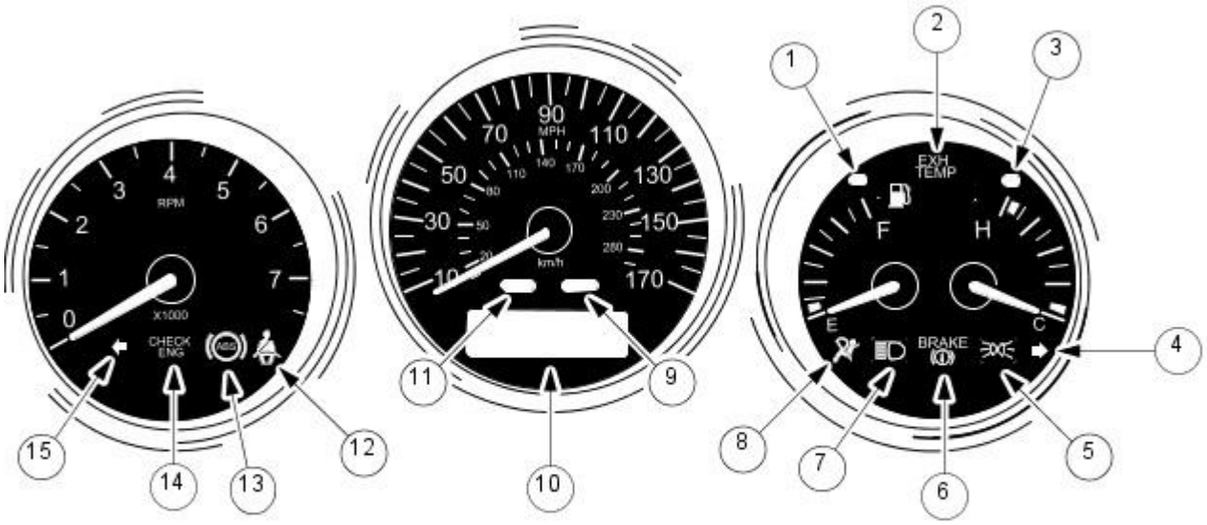

E34347

Item	Description
1	Low Fuel Level
2	Exhaust System Temperature *
3	Engine Coolant High Temperature
4	Direction Indicator Right Hand
5	Side / Parking Lamps
6	Handbrake ON / Low Brake Fluid Level
7	Main Beam
8	Airbag / Airbag System Fault
9	High Priority Text Message Displayed
10	Message Centre (Text Messages)
11	Low Priority Text Message Displayed
12	Seat Belt Not Fastened (Driver's)
13	ABS Integrity
14	EMS Fault
15	Direction Indicator Left Hand

*Not used on all markets. Refer to the Driver's Handbook.

All gauges look like conventional analogue gauges, but each pointer is driven by a stepper motor to provide more accurate indication.

The message centre is used to warn the driver, using text messages; for warnings not covered by conventional warning lamps, to indicate that the Automatic Stability Control is operating and for other shared warnings. Two warning lamps, Red and Amber, are located above the Message centre to attract the driver's attention when a text warning message has been displayed.

Instrument Cluster - Instrument Cluster

Diagnosis and Testing

Tests Using the Portable Diagnostic Unit

Refer to PDU User Guide

The complexity of the electronics involved with the Instrument Cluster and the two multiplexed communication networks which are connected to it, preclude the use of workshop general electrical test equipment. Therefore, reference should be made to the PDU User Guide for detailed instructions on testing the Instrument Cluster and associated circuits.

The PDU systematically tests and analyses all functions of the Instrument Cluster, the various systems controlled by it and individual sensors which are attached to each separate system.

Where a fault involving a remote sensor e.g. water temperature sensor, is indicated, some basic diagnostic methods may be necessary to confirm that connections are good and that wiring is not damaged, before replacing the component.

Diagnostics using the PDU is via the CAN network, accessed at the diagnostic connector on the car.

Replaceable Parts

The only replaceable parts are, General Illumination Bulbs, Direction Indicator Warning Bulbs and Main Beam Warning Bulb, which are all of the conventional filament type. Other warning lamps are LEDs and are not replaceable.

Instrument Cluster - Instrument Cluster

Removal and Installation

Removal

1. Turn ignition key to position 'II', adjust steering column to lowest and fully extended position and turn ignition key to 'O'.
2. Remove battery cover and disconnect ground cable from battery terminal. Refer to 86.15.19.
3. Remove driver airbag. Refer to 76.73.39.
4. Remove steering wheel. Refer to 57.60.01.
5. Remove driver side underscuttle. Refer to 76.46.11.
6. Accessing through underscuttle aperture, disconnect gauge module harness connectors.

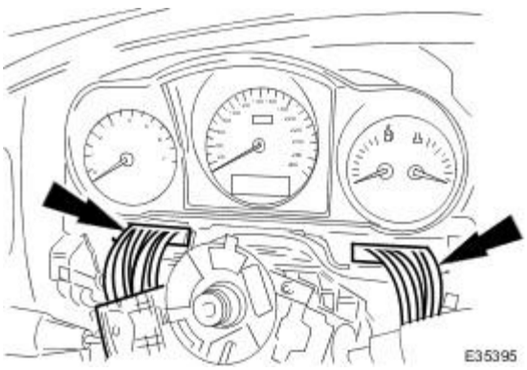

7. Using a thin plastic lever, remove major gauge module veneer panel.
8. Remove gauge module screws and withdraw module from facia.

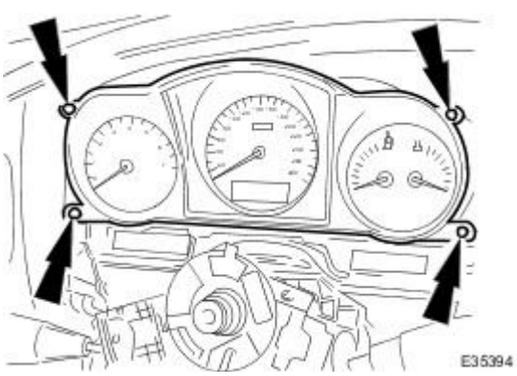

Installation

1. Position and fully seat gauge module in facia.
2. Install gauge module screws.
3. Connect gauge module harness connectors.
4. Install veneer panel, ensuring dowels are fully seated.
5. Install steering wheel. Refer to 57.60.01.
6. Install driver side underscuttle. Refer to 76.46.11.
7. Connect ground cable to battery terminal and install battery cover. Refer to 86.15.15.
8. Turn ignition key to position 'II', return steering column to original position and turn ignition key to 'O'.

Instrument Cluster - Instrument Cluster Lens

Removal and Installation

Removal

1. Turn ignition key to position 'II', adjust steering column to lowest and fully extended position and turn ignition key to 'O'.
2. Remove battery cover and disconnect ground cable from battery terminal. Refer to 86.15.19.
3. Remove driver airbag. Refer to 76.73.39.
4. Remove steering wheel. Refer to 57.60.01.
5. Remove driver side underscuttle. Refer to 76.46.11.
6. Remove major gauge module. Refer to 88.20.24.
7. Remove lens assembly screws and withdraw lens from module.

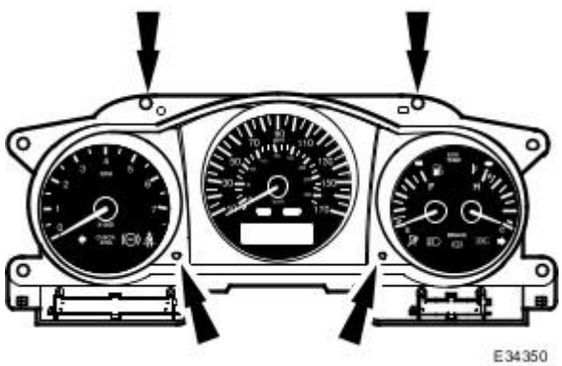

Installation

1. The installation procedure is the reverse of removal.

Instrument Cluster - Instrument Panel Console Instrument Cluster

Removal and Installation

Removal

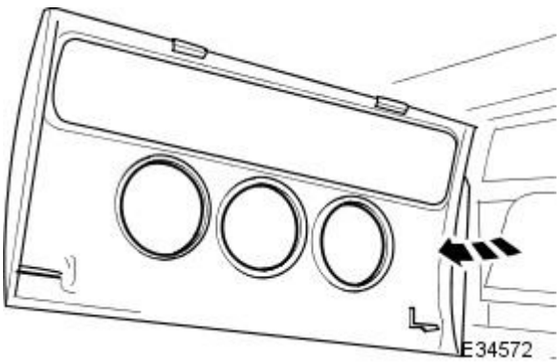

1. Remove battery cover and disconnect ground cable from battery terminal. Refer to 86.15.19.
2. Remove center veneer panel.
   - Using a thin plastic lever at base of center veneer panel, release four dowels from facia.
   - Lower panel to release upper locating tongues.

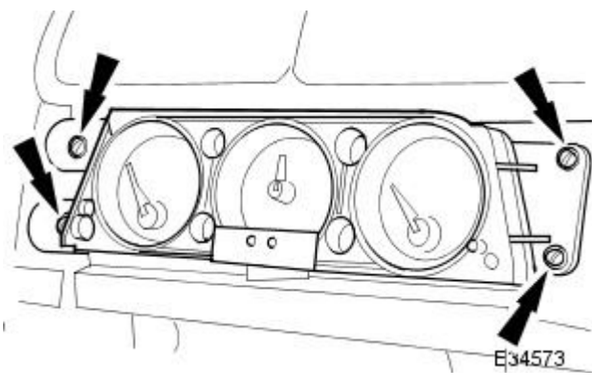

3. Remove the four gauge module screws.

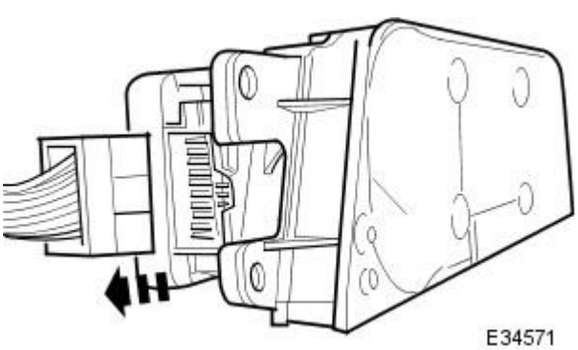

4. Position gauge module for access and disconnect harness connector.

Installation

1. Position gauge module at facia and connect harness connector.
2. Fully seat gauge module and install four screws.
3. Install center veneer panel, ensuring dowels are fully seated.
4. Connect ground cable to battery terminal and install battery cover. Refer to 86.15.15.

Instrument Cluster - Instrument Panel Console Instrument Cluster Lens

Removal and Installation

Removal

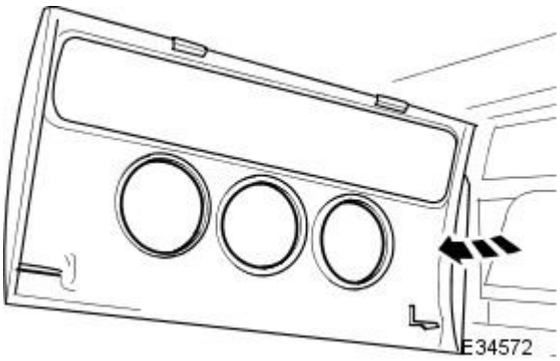

1. Remove center veneer panel.
   - Using a thin plastic lever at base of center veneer panel, release four dowels from facia.
   - Lower panel to release upper locating tongues.

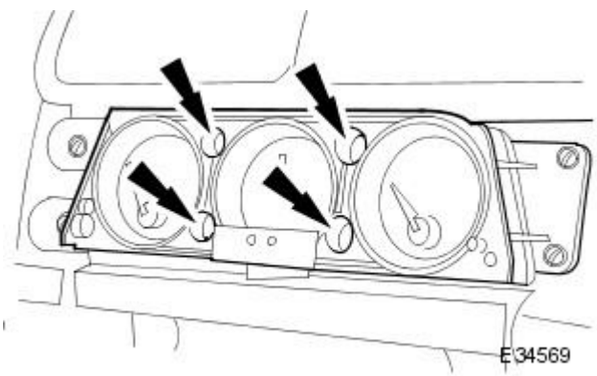

2. Remove the four gauge module lens assembly screws.

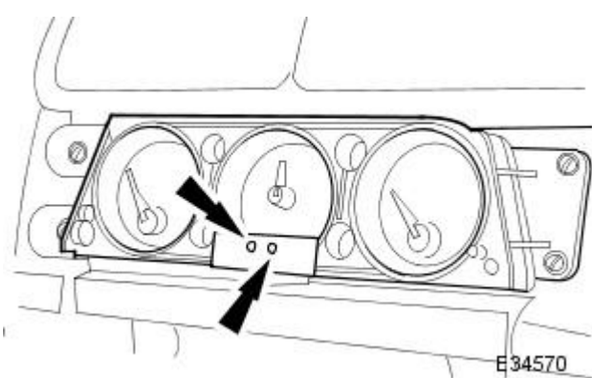

3. Withdraw lens assembly from gauge module and remove clock setting stalks.

Installation

1. Install clock setting stalks in lens assembly.
2. Position lens assembly on gauge module and install securing screws.
3. Install center veneer panel, ensuring dowels are fully seated.

Horn - Horn

Description and Operation

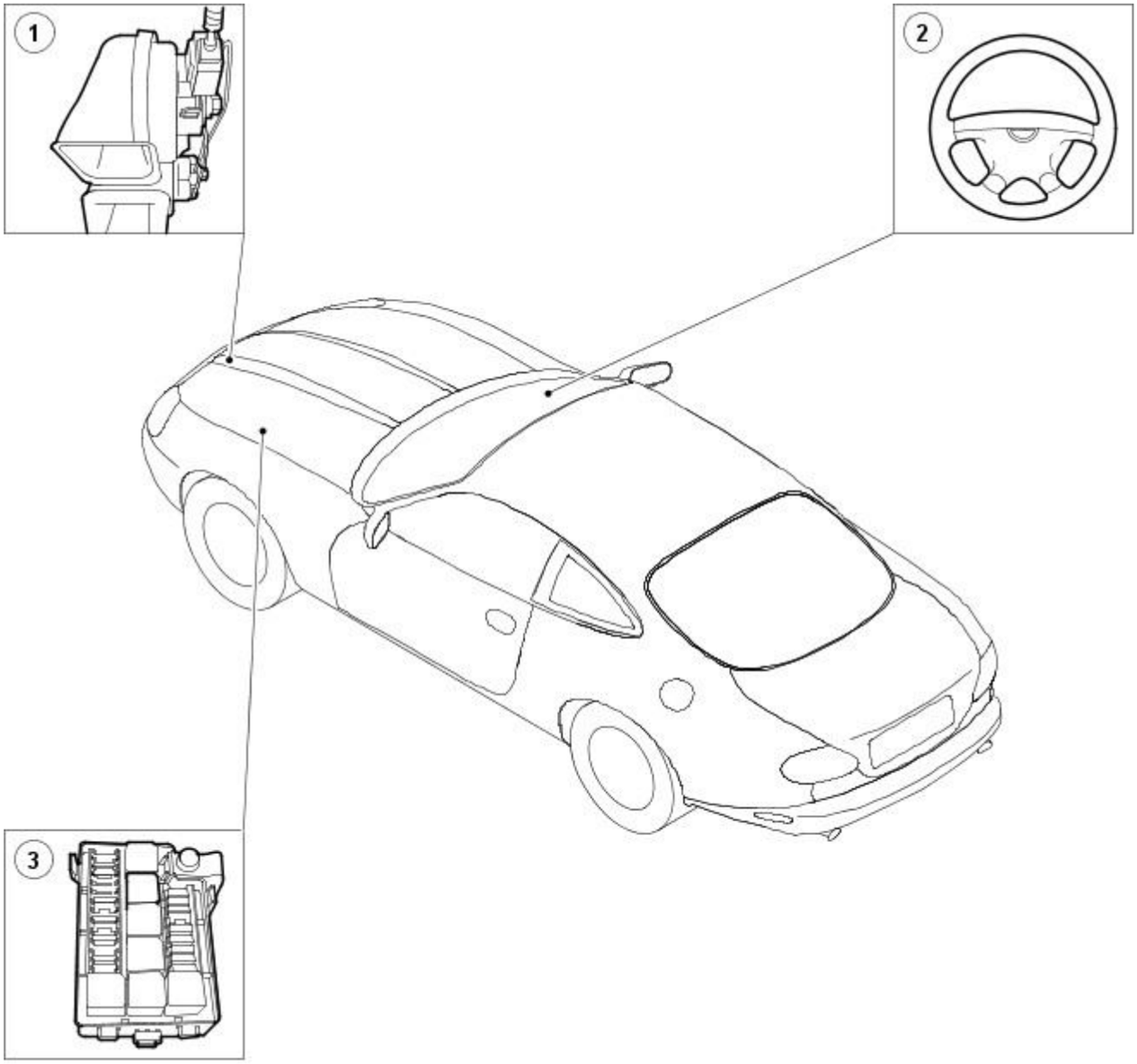

E37784

Item	Part Number	Description
1	—	Horn
2	—	Horn switch
3	—	Horn relay

The horn system includes the following:

- Auxiliary front junction box fuse 11 (10A)
- Horn relay
- Horn
- Clockspring
- Steering wheel control switch harness
- Horn switch
- Multifunction electronic module

The horn system is designed to sound the horn when the horn switch is operated or activated by the anti theft alarm system. The horn relay is supplied voltage at all times through the auxiliary front junction box fuse 11 (10A). Operating the horn switch provides a ground circuit to the coil side of the horn relay. In turn, the switch side of the horn relay is closed, allowing voltage to be applied to the horn.

Published: 11-May-2011

Horn - Horn

Diagnosis and Testing

1. **1.** Verify the customer concern.
2. **2.** Visually inspect for obvious signs of electrical damage.

Visual Inspection Chart

Electrical
• Fuse(s) • Wiring Harness • Electrical connector(s) • Horn(s) • Relay • Horn switch • Clockspring

3. **3.** If an obvious cause for an observed or reported concern is found, correct the cause (if possible) before proceeding to the next step.
4. **4.** If the cause is not visually evident, verify the symptom and refer to the Jaguar Approved Diagnostic System.

Horn - Horn

Removal and Installation

Removal

1. Remove the front bumper cover.
   For additional information, refer to Section 501-19 Bumpers.
2. Disconnect the electrical connector.

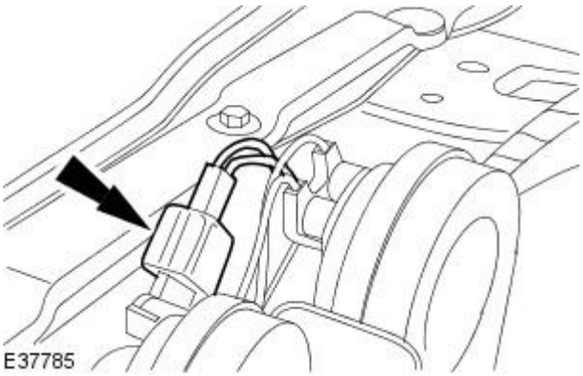

3. Remove the horn.

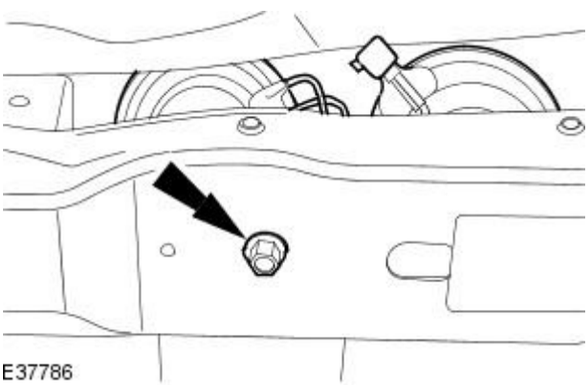

Installation

1. To install, reverse the removal procedure.

Published: 11-May-2011

Clock - Clock

Description and Operation

The analogue clock is in the center of three instruments, located on the minor instrument cluster.

Clock - Clock

Diagnosis and Testing

Tests Using the Portable Diagnostic Unit

Refer to PDU User Guide

The complexity of the electronics involved with the various Electronic Control Modules and the two multiplexed communication networks, preclude the use of workshop general electrical test equipment. Therefore, reference should be made to the PDU User Guide for detailed instructions on testing the clock circuit.

The PDU systematically tests and analyses the clock and the electrucal connections to it.

Where a fault involving the clock is indicated by the PDU, some basic diagnostic methods may be necessary to confirm that connections are good and that wiring is not damaged, before replacing the minor instrument cluster.

Published: 11-May-2011

Information and Message Center - Information and Message Center

Description and Operation

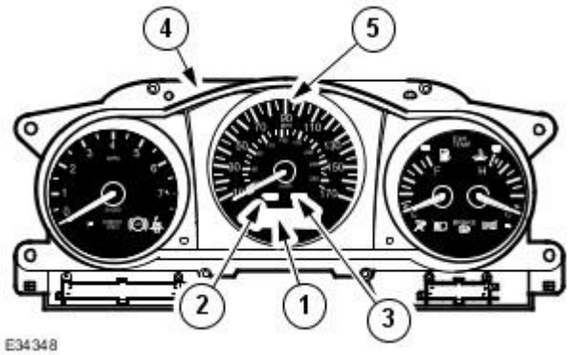

Item	Description
1	Driver's Information / Message Center
2	Amber Warning Lamp
3	Red Warning Lamp
4	Major Instrument Cluster
5	Speedometer

The Driver's Information Center has a liquid crystal display and is located at the lower area of the Major Instrument Cluster.

The message centre is used to warn the driver, using text messages, for warnings not covered by conventional warning lamps, to indicate that the Automatic Stability Control is operating and for other shared warnings.

The amber and red warning lamps attract the driver's attention when a new message has been displayed. The importance of the message dictates which lamp is swithed on. The lamps are also used together for some warnings and for some non-text warnings - refer to the Driver's Handbook for variations in local markets.

The odometer is incorporated into the Driver's Message Center.

Information and Message Center - Information and Message Center

Diagnosis and Testing

Tests Using the Portable Diagnostic Unit

Refer to PDU User Guide

The complexity of the electronics involved with the speedometer and instrument cluster, of which the Message Center is a part, and the two multiplexed communication networks which are connected to it preclude the use of workshop general electrical test equipment. Therefore, reference should be made to the PDU User Guide for detailed instructions on testing the speedometer and odometer.

The PDU systematically tests and analyses all functions and the various systems affected by it.

Where a fault is indicated, some basic diagnostic methods may be necessary to confirm that connections are good and that wiring is not damaged, before replacing a component.

Parking Aid - Parking Aid

Description and Operation

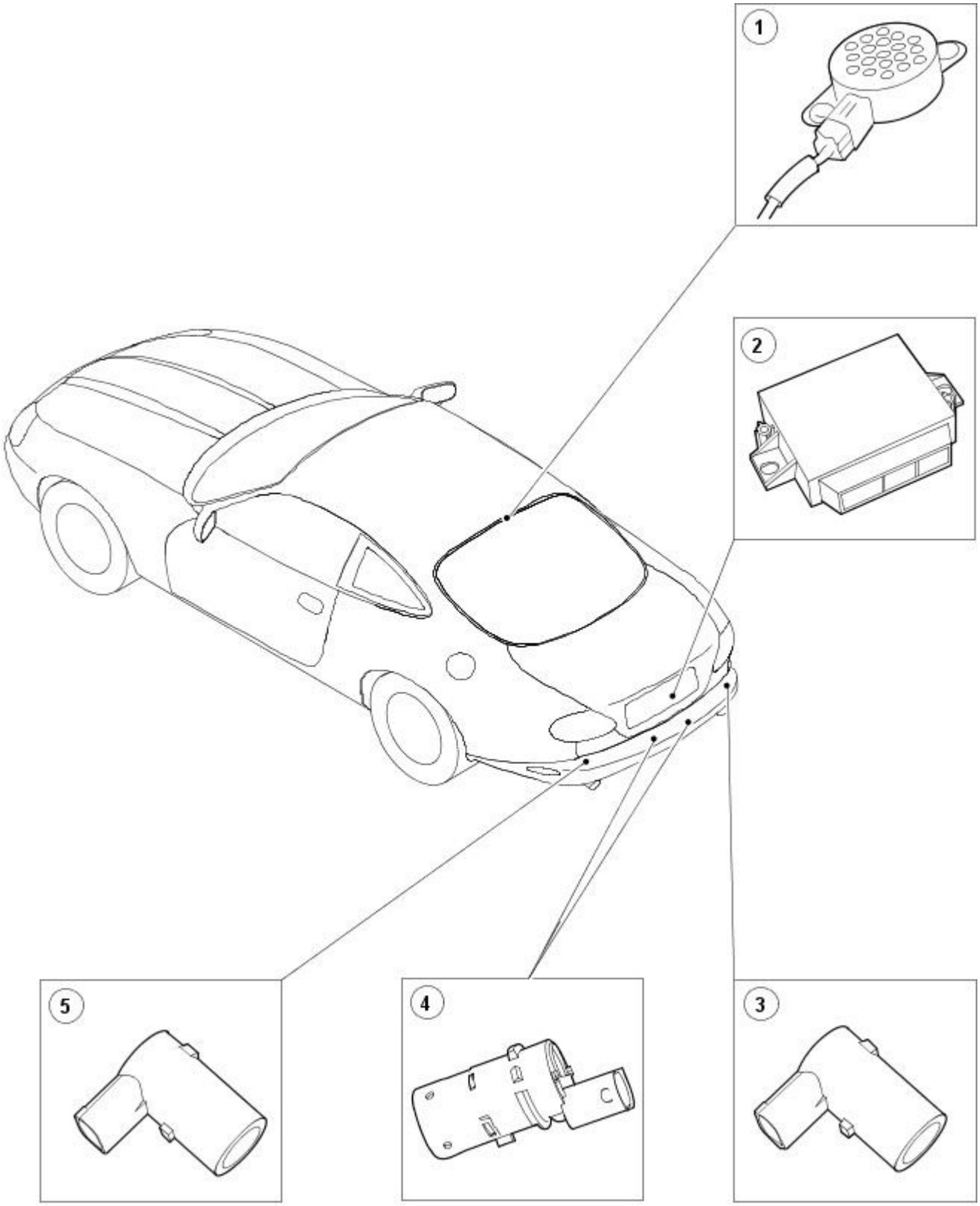

E49041

Item	Part Number	Description
1	—	Parking aid speaker
2	—	Parking aid module
3	—	Parking aid sensor (outer)
4	—	Parking aid sensors (inner)
5	—	Parking aid sensor (outer)

The function of the parking aid is to provide an audible warning to the driver of the distance to obstacles near the rear bumper of the vehicle when parking. The system provides an assistance to the driver when parking in order to help avoid collision with obstacles.

The sensor range of the vehicle should be 1.8 meters. This should extend the full width of the rear bumper and reduce to 50 cm at the vehicle corners. The vertical range is adequate to protect the highest and lowest points at the rear of the vehicle. The system will detect curbs with heights of at least 18 cm. Obstacles, such as curbs, that are low enough to pass under the vehicle until they make contact with the tires will not be detected.

The system activates a speaker with a tone signifying the distance to the obstacle. The tone consists of a beep and defined space ratio which varies depending on the calculated distance. When the distance to the obstacle is less than 20 cm the speaker tone is continuous.

The parking aid is in operation when reverse is selected. If the reverse aid develops a fault the tone will sound continuously for three seconds when the ignition is switched on or reverse is selected.

The parking aid system consists of:

- a module mounted inside the luggage compartment fusebox compartment.
- four rear bumper mounted sensors of which the two inner sensors have straight electrical connector in order to give clearance to the bumper reinforcing frame.
- one audible speaker, mounted on the floor console end trim panel.

Published: 11-May-2011

Parking Aid - Parking Aid

Diagnosis and Testing

Inspection and Verification

1. **1.** Verify the customer concern.
2. **2.** Visually inspect for obvious signs of electrical damage.

Visual Inspection Chart

Electrical
• Fuse(s) • Relay(s) • Wiring Harness • Electrical connector(s) • Parking aid sensor(s) • Parking aid speaker • Reversing lamp switch • Parking aid module

3. **3.** If an obvious cause for an observed or reported concern is found, correct the cause (if possible) before proceeding to the next step.
4. **4.** If the cause is not visually evident, verify the symptom and refer to the Jaguar Approved Diagnostic System.

Published: 11-May-2011

Parking Aid - Parking Aid Module

Removal and Installation

Removal

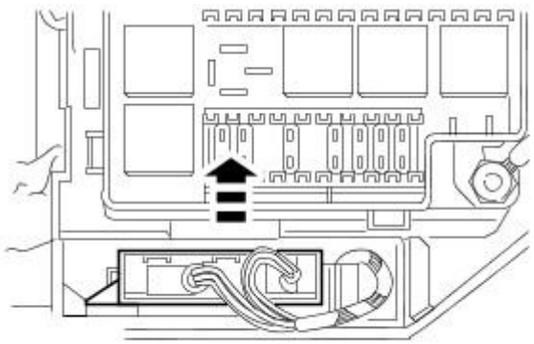

E49042

1. Remove the battery cover.
2. Remove the luggage compartment fusebox cover.
3. Detach the parking aid module.

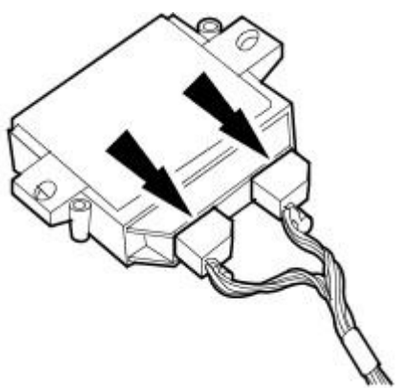

E49043

4. Remove the parking aid module.
   - Disconnect the parking aid module electrical connectors.

Installation

1. NOTE: Make sure the protection foam is installed to the parking aid module.

To install, reverse the removal procedure.

Parking Aid - Rear Parking Aid Sensor

Removal and Installation

Removal

- NOTE: Federal market vehicles, refer to steps 1,3 and 4.
- NOTE: Non federal market vehicles, refer to steps 2,3 and 4.

1. NOTE: Federal market vehicles.

Remove the rear bumper cover.
For additional information, refer to: Rear Bumper Cover (501-19 Bumpers, Removal and Installation).

2. NOTE: Non federal market vehicles only.

Disconnect the rear parking aid sensor electrical connector.

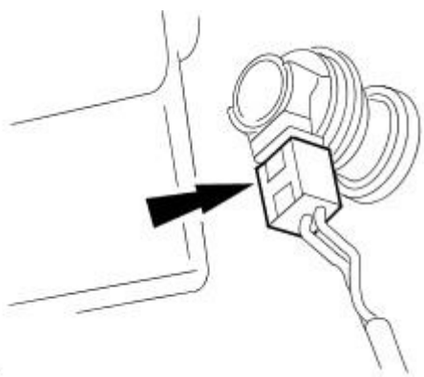

E49045

3. NOTE: All vehicles.

Rotate the rear parking aid sensor counter-clockwise.

E49046

4. CAUTION: Make sure excessive pressure or tools are not used when removing the parking aid sensor from the housing.

Remove the rear parking aid sensor.

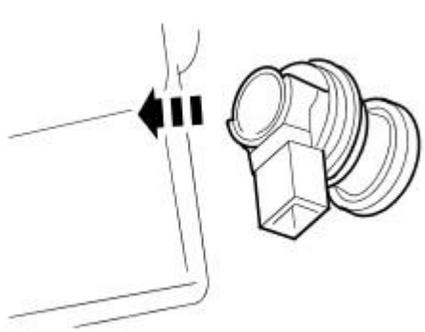

E49047

Installation

1. To install, reverse the removal procedure.

Parking Aid - Rear Parking Aid Speaker

Removal and Installation

Removal

E49048

1. Detach the floor console end trim panel.

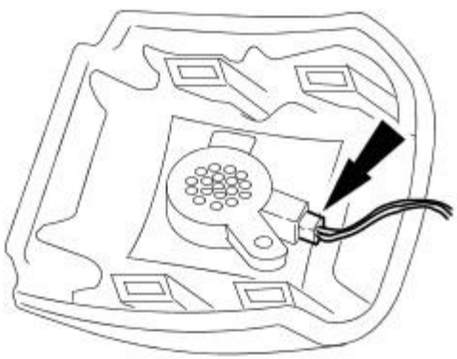

E49049

2. Disconnect the electrical connector.

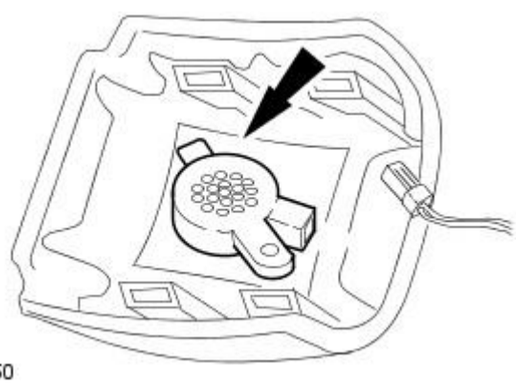

E49050

3. Remove the rear parking aid speaker.

Installation

1. To install, reverse the removal procedure.

Published: 11-May-2011

Battery and Charging System - General Information - Charging System

Description and Operation

Details of the Charging System can be found in sections 414-01 and 414-02.

Published: 14-Jul-2011

Battery and Charging System - General Information - Battery Care

Description and Operation

12V LEAD ACID BATTERY CARE MANUAL FOR DEALER / RETAILER USE

1. INTRODUCTION

2. GENERAL RULES FOR BATTERY CARE

3. EQUIPMENT (MINIMUM STANDARD)

4. HEALTH AND SAFETY PRECAUTIONS

5. DETERMINING BATTERY CONDITION

6. BATTERY CHARGING AND MAINTENANCE

7. CHARGING SYSTEM TEST AND DIAGNOSIS

8. VEHICLE QUIESCENT CURRENT TESTING

APPENDIX A: BATTERY TEST PROCESS

APPENDIX B: BATTERY REPORT FORM - IN SERVICE BATTERIES ONLY

1. INTRODUCTION

This publication sets out, for the benefit of dealers / retailers worldwide, requirements for the care and maintenance of batteries, from the vehicles hand-over to the dealer / retailer to the handover to the customer or in the case of a spare part battery from is delivery to the dealer / retailer to its fitment to a customer vehicle.

It applies to all types of 12 volt Lead Acid Batteries used, whether they are conventional flooded technology or Absorbed Glass Mat (AGM) technology and also applies to both Primary and Secondary or Auxiliary Batteries.

The clearly laid out and illustrated sections guide dealers / retailers through each stage of the vehicles or spare parts receipt, storage, pre-delivery and customer hand-over. This publication can be used as a guide to the handling and care of batteries in service. It is vital to appreciate that unless each process is rigorously applied on all vehicles, the customer will receive a vehicle with a battery or a spare part battery which will not provide a satisfactory service life.

It is very important that all tests quoted throughout this publication are adhered to. If they are applied incorrectly batteries could be scrapped unnecessarily. Refer to the battery testing section for detailed information.

It is equally important therefore to note the following key points:

- Most new vehicles leave the factory with either a transit relay installed and/or have a transit mode programmed into the vehicle control modules. The transit relay must be removed and the transit mode disabled (where applicable) using an approved diagnostic system, **NOT MORE THAN 24 HOURS** before the customer takes delivery.
- 12 Volt Lead Acid Batteries rely on internal chemical processes to create a voltage and deliver current. These processes and the internal chemical structure of the battery can be damaged if the battery is allowed to discharge over a number of weeks / months, or is left in a discharged state for a lengthy time period. For this reason the battery must be tested / re-charged if necessary every month, and **MUST BE** re-charged after every three month period of storage. Refer to the vehicle storage manual and update the vehicle history sheet.
- Under no circumstances should the battery be disconnected with the engine running because under these conditions the alternator can give a very high output voltage. This high transient voltage will damage the electronic components in the vehicle. Loose or incomplete battery connections may also cause high transient voltage.
- On vehicles with conventional ignition keys, these must not be left in the ignition lock barrel when the transit relay has been removed, otherwise quiescent current will increase and the battery will discharge more rapidly.
- Two types of Lead acid batteries are used; standard Flooded type and AGM (Absorbed Glass Mat) or VRLA (Valve regulated Lead Acid) types. AGM batteries offer improved resistance to cycling as seen in stop start applications. AGM Batteries are fully sealed and cannot have the electrolyte level topped up.

Dealers and retailers involved in the storage, handling of vehicles and spare parts batteries have a responsibility to ensure that only vehicles and spare parts having a fully satisfactory battery may be processed further through the distribution selling chain.

• NOTE: It is very important that test processes quoted throughout this publication are adhered to.

If they are not adhered to correctly batteries could be scrapped unnecessarily or a battery with an issue remains in use. Refer to the battery testing section for detailed information.

2. GENERAL RULES FOR BATTERY CARE

Frequency of Battery Condition Checks.

Any battery in storage whether it is in a vehicle or in spare parts inventory must have its charge status checked every 30 days as described in Appendix A, and must be recharged every 90 days as described in the "Battery Charging and Maintenance" section of this manual.

Dealer Demonstration Vehicles

Due to the high depth of discharge a dealer demonstration vehicle battery may experience, batteries that are fitted to vehicles used as dealer demonstration vehicles must be connected to a power supply / charger capable of delivering 50 Amps or more whilst the vehicle is being demonstrated and the engine is not running. This will prevent the battery from being damaged from "energy throughput " wear out during a demonstration.

Software Reflash, SDD work or Ignition On related Workshop Activities.

Due to the high electrical current demand and high depth of Discharge that can occur during vehicle software re-flash activities, SDD work or ignition on related work in the workshop, vehicles that are undergoing such activities MUST have the electrical system on the vehicle

supported with a power supply / charger / vehicle maintainer capable of delivering 50 Amps or more.

Jump Starting New vehicles Before They Have Been Delivered to the Customer.

- It is the dealer / retailers responsibility to ensure the battery is not allowed to go flat by following the instructions and processes defined in this manual.
- However if circumstances dictate that a new vehicle must be jump started due to a flat battery whilst the vehicle is in the dealer / retailers care, the battery on this vehicle must be replaced with a new one prior to delivery to the customer at the dealer / retailers liability.
- The vehicle should also undergo investigation as to why the battery went flat.
- Do not connect the jump starting cable to the negative (-) terminal of the battery. Always connect to the recommended earthing point. As defined in the owners handbook or service documentation for that vehicle.

Jump Starting or Boost Charging Vehicles in Service

Do not connect the jump starting cable to the negative (-) terminal of the battery. Always connect to the recommended earthing point. As defined in the owners handbook or service documentation for that vehicle.

Charging AGM Batteries

AGM batteries must not be charged with voltages above 14.8 Volts. Doing so will damage them.

Testing AGM Batteries

Midtronics 393, 394, 493 and 494 testers are not capable of testing AGM batteries. Doing so can give an incorrect result.

When it is necessary to test an AGM battery use the Midtronics EXP1080 tester or the GR1 Diagnostics Charger.

3. EQUIPMENT (MINIMUM STANDARD) (pictures are for illustration only)

Traction Battery Charger (or similar stand-alone charger)

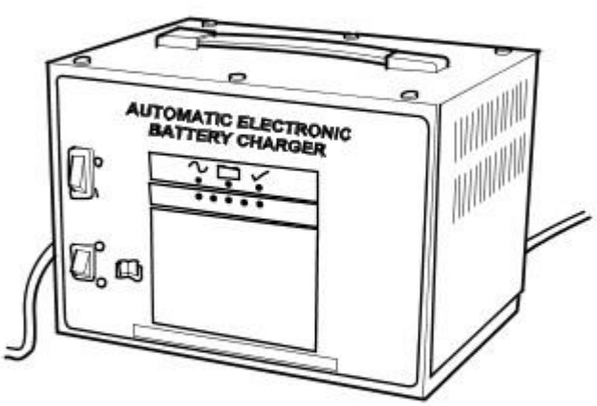

E138126

Midtronics EXP1080 Hand-Held Tester

Digital Multi-Meter or Digital Volt-Ohm Meter (DVOM)

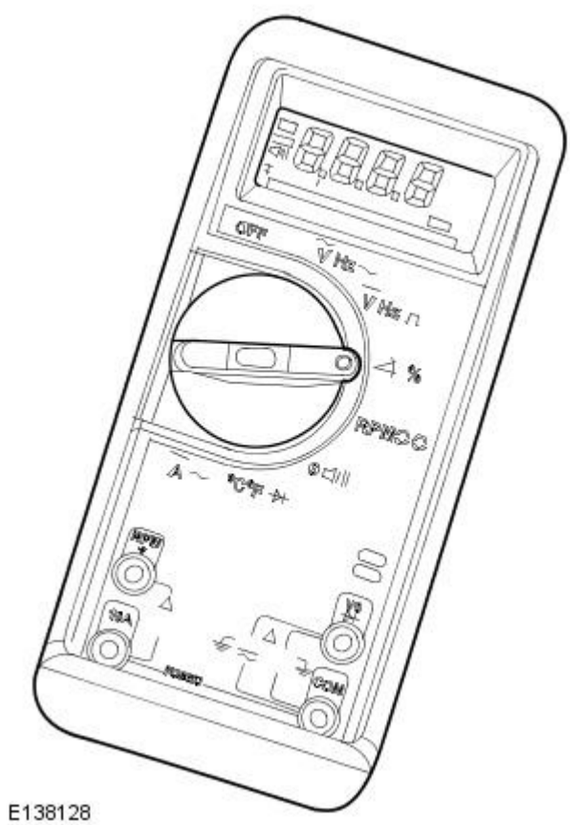

Midtronics GR-1 Diagnostic Charger

E138129

4. HEALTH AND SAFETY PRECAUTIONS

• WARNINGS:

BATTERY CELLS CONTAIN SULPHURIC ACID AND EXPLOSIVE MIXTURES OF HYDROGEN AND OXYGEN GASES. IT IS THEREFORE ESSENTIAL THAT THE FOLLOWING SAFETY PRECAUTIONS ARE OBSERVED.

Batteries emit highly explosive hydrogen at all times, particularly during charging. To prevent any potential form of ignition occurring when working in the vicinity of a battery:

- Do not smoke when working near batteries.
- Avoid sparks, short circuits or other sources of ignition in the battery vicinity.
- Switch off current before making or breaking electrical connections.
- Ensure battery charging area is well ventilated.
- Ensure the charger is switched off when: a) connecting to a battery; b) disconnecting from the battery.
- Always disconnect the ground cable from the battery terminal first and reconnect it last.

Batteries contain poisonous and highly corrosive acid. To prevent personal injury, or damage to clothing or the vehicle, the following working practices should be followed when topping up, checking electrolyte specific gravity, removal, refitting or carrying batteries:

- Always wear suitable protective clothing (an apron or similar), safety glasses, a face mask and suitable gloves.
- If acid is spilled or splashed onto clothing or the body, it must be neutralized immediately and then rinsed with clean water. A solution of baking soda or household ammonia and water may be used as a neutralizer.
- In the event of contact with the skin, drench the affected area with water. In the case of contact with the eyes, bathe the affected area with cool clean water for approximately 15 minutes and seek urgent medical attention.
- If battery acid is spilled or splashed on any surface of a vehicle, it should be neutralized and rinsed with clean water.
- Heat is generated when acid is mixed with water. If it becomes necessary to prepare electrolyte of a desired specific gravity, SLOWLY pour the concentrated acid into water (not water into acid), adding small amounts of acid while stirring. Allow the electrolyte to cool if noticeable heat develops. With the exception of lead or lead-lined containers, always use non-metallic receptacles or funnels. Do not store acid in excessively warm locations or in direct sunlight.

Due to their hazardous contents, the disposal of batteries is strictly controlled. When a battery is scrapped, ensure it is disposed of safely, complying with local environmental regulations. If in doubt, contact your local authority for advice on disposal facilities.

5. DETERMINING BATTERY CONDITION

The tools used for determining the condition of the battery will depend upon whether it is installed in a vehicle or in spare parts inventory. Concerning an installed battery, procedures will vary if the vehicle is new, or already in service with a customer.

• NOTE: The term `New Vehicle' refers to a vehicle at any part of the delivery process from leaving the factory to arriving at a port of entry, dealership, retailer, including any storage facilities en route or a vehicle being stored prior to sale at dealership / retailer.

• NOTE: Midtronics 393, 394. 493 and 494 testers must not be used to test AGM batteries as these testers are not capable of correctly testing AGM batteries and can give an incorrect result. For AGM battery testing use the EXP1080 tester or the GR1 Diagnostics charger.

NEW VEHICLES

A Midtronics tester should be used to assess the condition of the battery for new vehicles. The test results should be recorded on the Storage History Sheet (see Vehicle Storage manual).

Scenario 1 - Dealership / Retailer (Responsibility: Dealer / Retailer)

1. Within 24 hours of arrival at the dealer / retailer proceed as follows:

- Perform a Midtronics battery test (See Appendix A.)
- Carry out the recommended actions accordingly.

2. If the Midtronics result is "Good Battery" the vehicle may be stored.

- For all new vehicles in storage the transit relay MUST be fitted, or the Transit Mode enabled where used. For vehicles without a transit relay or a Transit Mode, the battery negative cable MUST BE DISCONNECTED from the battery.

3. The battery must be tested and/or re-charged every month and MUST be re-charged after every three month period.

4. Record your test results on the Storage History Sheet (see Vehicle Storage Manual) to indicate when a re-charge will be necessary.

Scenario 2 - Delivery to the Customer (Responsibility: Dealer / Retailer)

• NOTE: It is essential that the following actions are conducted in the 24 hours prior to the agreed hand over time:

1. Perform a Midtronics Battery test (See Appendix A).

2. Carry out the recommended actions accordingly.

3. The vehicle should only be released to the customer if Midtronics has tested the battery as "Good Battery"

Spare Part Batteries

Lead acid batteries will, as a result of natural chemical processes, slowly self discharge themselves over a period of time (even when open circuit and no electrical load applied).

In the case of spare parts batteries, a Midtronics tester should be used to assess the condition of new spare parts batteries.

The batteries must be stored such that they cannot get wet and are not in direct sunlight.

Any batteries which are dropped must be scrapped. This applies even if no external damage is apparent.

Scenario 1 - Spare Part Batteries Within Dealer Stock But Not Yet Fitted To A Vehicle (Responsibility: Dealer / Retailer)

1. For a battery in the Dealer parts or in ready to use stock but not yet fitted to a vehicle the following rules must be followed:

- Check the battery condition on receipt by performing a Midtronics battery test (See Appendix A).
- Batteries should only be returned to storage if the Midtronics tester indicates "Good Battery".
- The battery condition should be rechecked every 30 days by performing a Midtronics battery test (See Appendix A).
- If required batteries should be recharged as described in the "Battery Charging and Maintenance" section of this manual.

2. 2 All batteries must be controlled via a FIFO (First In First Out) process to ensure aged batteries are not held and the batteries are not allowed to age unnecessarily.

VEHICLES IN SERVICE

The Midtronics hand-held tester or the Midtronics Diagnostic Charger are the preferred tools to assess battery condition for vehicles in service. The test results should be recorded on the In-Service Battery Report Form (See Appendix B).

Midtronics Testing - In-Service Testing Only

• NOTE: The battery surface charge must be removed before this test in accordance with the procedure in Appendix A. Ensure that the battery terminal connectors are clean. When connecting the Midtronics testing equipment, connect the RED clip to the positive (+) battery terminal first, and then connect the BLACK clip to the negative (-) battery terminal. Rock the clips backward and forward to ensure a good connection to the battery.

1. Perform a Midtronics battery test (See Appendix A).

2. Carry out the recommended actions accordingly.

6. BATTERY CHARGING AND MAINTENANCE

BATTERY CHARGING

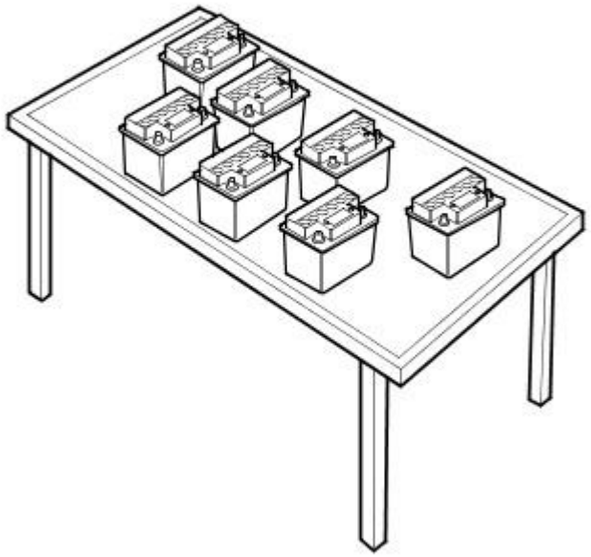

E138130

It is essential that a suitably ventilated defined area exists in each dealership / retailer for battery charging. Likewise, an area should be allotted for scrap batteries, and clearly indicated as such. It is recommended that dealers / retailers always have fully charged batteries ready for use. However the battery MUST BE tested and charged if necessary every month, and charged after three months irrespective of any test.

• CAUTIONS:

Batteries must be re-charged after a maximum of 3 months storage (see Storage History sheet in the New Vehicle Storage Manual).

It is very important that when charging batteries using the traction charger or other stand-alone chargers that the charger is set for the correct type of battery before charging commences. If the wrong switch is selected the result would be a battery that is not charged fully and / or overheating can occur. Follow the manufacturers operating instructions.

Do not charge AGM batteries with voltages over 14.8 volts as this will damage the battery.

To bring a serviceable but discharged battery back to a fully charged condition proceed as follows:

- Check and if necessary top-up the battery electrolyte level.
- Charge the battery using the Midtronics Diagnostic Charger (USA) or Traction Charger (all other markets) following the manufacturers operating instructions.

• NOTE: When using the Midtronics Diagnostic Charger, automatic mode must always be used. After charging and analysis, the charger may display 'Top-Off Charging', press STOP to end. Do not stop charging until the current falls to 5A or less, otherwise the battery will not be fully charged.

POST-CHARGE TEST METHODS

New Batteries, Batteries in Storage and In-Service Batteries

The purpose of this test is to ensure that the charging process has fully charged the battery.

• NOTE: IT IS RECOMMENDED THAT THIS TEST IS CONDUCTED AT LEAST 24 HOURS AFTER THE CHARGE CYCLE IS COMPLETED.

CAUTION: DO NOT connect the tester to any other circuit or chassis point.

1. Attach the Midtronics Tester to the battery.

2. Follow the instructions on the tester to test the battery. Ensure the correct battery type and size is selected.

3. Perform the action based on the tester results (see the tester results chart in the Vehicles in Service sub -section of Determining Battery Condition Section).

4. Enter the readings and test code obtained on the In Service Battery Report Form.

• NOTE: Midtronics 393, 394. 493 and 494 testers must not be used to test AGM batteries as these testers are not capable of correctly testing AGM batteries and can give an incorrect result. For AGM battery testing use the EXP1080 tester or the GR1 Diagnostics charger.

BATTERY REPLACEMENT

If it is determined that a battery requires replacement, always refer to the appropriate section of the workshop manual for instructions on removing and installing the battery from the vehicle.

On in service vehicles fitted with a Battery Monitoring System (BMS), the BMS module must be reset following the installation of a new battery. The BMS module reset procedure must be performed using an approved diagnostic system.

CHECK / TOP-UP BATTERY ELECTROLYTE – Only Applicable to certain Flooded Types of Battery.

• WARNINGS:

AGM TECHNOLOGY BATTERIES ARE FULLY SEALED FOR LIFE AND NO ATTEMPT SHOULD BE MADE TO CHECK OR TOP UP THE ELECTROLYTE LEVEL.

BEFORE CHECKING AND TOPPING-UP THE BATTERY ELECTROLYTE, REFER TO THE HEALTH AND SAFETY PRECAUTIONS SECTION.

Check to ensure the battery is of a type suitable for topping up. These types of batteries will have cell plugs visible on the top face of the battery or a removable access panel to allow access to the cells.

On batteries with a clear or opaque case and level marks, check the electrolyte level by visual inspection of the maximum level indicator mark on the battery casing indicating adequate level above the battery separators.

On batteries with black cases, remove the cell plugs or access panel and ensure the electrolyte level is level with the indicator in the cell hole. A flashlight may be required to see the electrolyte level on this type of battery.

CAUTION: **DO NOT** overfill.

If the electrolyte level is low, top-up using distilled water.

Maintenance free and Valve Regulated (AGM) batteries are sealed and therefore cannot be topped up.

CHARGING SYSTEM TEST AND DIAGNOSIS

For all vehicles, refer to the Charging System - Diagnosis and Testing in section 414-00 of the Workshop Manual.

VEHICLE QUIESCENT CURRENT TESTING

• NOTE: On vehicles fitted with a Battery Monitoring System (BMS), the diagnostic routine for quiescent drain testing in the approved diagnostic system should be utilized.

• NOTE: If a customer complains of a vehicle battery that discharges continuously or when left for a prolonged period of time, it is recommended that a quiescent drain test is performed as described below.

• NOTE: The battery drain should be measured using an approved diagnostic system or a Digital Multi-Meter (DVOM).

The vehicle should be in the locked/armed state (for example vehicle alarm fully armed), all doors, engine and luggage compartment lids are open and latched (so as to appear closed from an electrical point of view). The test should take place after the vehicle has entered shutdown mode. The time taken for this to occur after the ignition is switched off varies according to model - Refer to Quiescent Drain in section 414-00 of the Workshop Manual.

• NOTE: When the vehicle is armed, the effect of the security system Light Emitting Diode (LED) flashing is to cause a pulsation in the measured current drain. In this case, either the average current should be taken (using a Digital Multi- Meter (DVOM) with an averaging system) or the current reading taken, ignoring the brief high current peaks.

EQUIPMENT

Approved diagnostic system with current probe or Digital Multi-Meter (DVOM) with current probe.

METHOD OF MEASUREMENT

Using an Approved Diagnostic System

1. Switch off all electrical loads and ensure that the ignition is off.

2. Connect the current probe to the approved diagnostic system.

3. Calibrate the probe.

4. Install a clamp around the battery lead/junction box lead.

5. Go to the Quiescent Current Testing section.

Using a Digital Multi-Meter (DVOM)

• NOTE: Do not use an in-line DVOM to measure the quiescent drain on vehicles fitted with an electronic throttle. The current exceeds the maximum amount the fuse in the DVOM is capable of handling.

1. Switch off all electrical loads and ensure that the ignition is off.

2. Connect the current probe to the DVOM.

3. Calibrate the probe.

4. Install a clamp around the battery lead/junction box lead.

5. Go to the following Quiescent Current Testing section.

QUIESCENT CURRENT TESTING

1. Switch ignition to ‘on’ or select ignition mode in keyless vehicles and switch to ‘off’ (do not crank).

2. Remove key from ignition switch (where applicable).

3. Open and latch all doors, hood and luggage compartment lid.

4. Lock the vehicle using the remote function on the remote handset. (Single lock only to avoid volumetric alarm arming).

5. Remove any other potential electrical drains such as accessories plugged into accessory sockets.

6. Record the amperage readings after the shutdown period. The model specific Amperage readings for quiescent drain are referenced in Quiescent Drain in section 414-00 of the Workshop Manual

7. Record the final reading on the battery report form Appendix B.

• NOTE: The preferred method of testing following an excessive current consumption figure is to use a current probe around individual junction box leads to the various suspected circuits to identify a potential cause. This is in preference to the old method of removing fuses for the following reasons:

- Many modules take a considerable time to power down. Each time a fuse is removed and re-fitted, the quiescent drain current may take an extended period of time to return to normal (typically up to 45 minutes).
- The drain may be caused by a module remaining active and preventing the quiescent drain from reducing to normal levels.
- The drain may be caused by a relay winding that is activated. Pulling the fuse can allow this to ‘reset’ and the drain will be lost and go un-diagnosed.

APPENDIX A BATTERY TEST PROCESS

It is recommended that this test is conducted at least 24 hours after the vehicle engine has been run or the battery charged to avoid the need of surface charge removal or if this time constraint is unacceptable due to circumstances, then conduct the charge strip removal process.

Part 1 - Surface Charge Removal

• NOTE: Before carrying out a battery test you must ensure that there is no battery surface charge present.

• NOTE: The battery may be tested either on a bench or on the vehicle.

- In the case of on-vehicle testing, the battery must be isolated from the vehicle by removal of the battery negative (-) cable from the battery terminal before the measurement is taken unless the vehicle has a transit relay fitted or is in transit mode.

A vehicle which has had its battery charged or been driven in a 24 hour period before the test, must have its surface charge removed using one of the following methods:

1. If 24 hours have passed since the last time the engine was run or the battery charged, proceed to `Part 2 - Battery Test'.

2. Turn on the ignition. Switch on the headlamps on high beam for a minimum 3 minutes.

3. Switch off the headlamps. For vehicles tested after the transit relay has been removed, disconnect the battery by removal of the negative (-) cable. Vehicles with a transit relay fitted or with a low current transport mode enabled do not need to have the battery disconnected.

4. Wait a maximum of 5 minutes before recording test results for any battery measurements.

Part 2 - Battery Test

• NOTE: The battery surface charge must be removed before this test in accordance with the procedure in Part 1 above. Ensure that the battery terminal connectors are clean. When connecting the Midtronics testing equipment, connect the RED clip to the positive (+) battery terminal first, and then connect the BLACK clip to the negative (-) battery terminal. Rock the clips backward and forward to ensure a good connection to the battery.

• NOTE: Midtronics 393, 394. 493 and 494 testers must not be used to test AGM batteries as these testers are not capable of correctly testing AGM batteries and can give an incorrect result. For AGM battery testing use the EXP1080 tester or the GR1 Diagnostics charger.

CAUTION: **DO NOT** connect the tester to any other circuit or chassis point other than the battery negative terminal.

1. Attach the Midtronics tester to the battery.

2. Follow the instructions on the tester to test the battery. Ensure the correct battery type and size is selected.

3. Perform the action based on the tester results (see table below).

4. Enter the readings and test code obtained on the Battery Report Form (Appendix B) or equivalent which records as a minimum the technician's name, Vehicle Identification Number (VIN), Date of check, Midtronics code and Battery Voltage from the Midtronics tester.

At the end of the test, the battery negative (-) cable should be re-attached to the battery terminal.

TESTER RESULTS	ACTION
GOOD BATTERY	Return to service.
GOOD RE-CHARGE	Fully charge battery and return to service.
CHARGE AND RE-TEST	Fully charge battery. Remove surface charge. Re-test battery. If same result replace battery.
REPLACE BATTERY OR BAD CELL BATTERY	Verify surface charge removed. Disconnect battery from vehicle and re-test. If result repeats after surface charge removal, replace battery. **DO NOT RECHARGE**.
UNABLE TO DO TEST	Disconnect battery from vehicle and re-test.

APPENDIX B : BATTERY REPORT FORM - IN SERVICE BATTERIES ONLY

• NOTE: Fields marked with * are mandatory and must be completed.

General Information	YES / NO		YES / NO	
Customer Name:		Dealer/Retailer Code:	*	
Repair Order Number:	*	Battery Date Code:	*	
Repair Order Date:	*	Number of Times Battery Charged:	*	
Repair Order Date:		Technicians Name:	*	
Vehicle Identification Number (VIN):	*	Technicians Signature:	*	
Give a detailed description of the symptoms experienced by the customer (attach a separate sheet if necessary)				
-				
-				
-				
-				
-				
-				
Diagnostics (Battery Testing)				
1: Loose battery clamps	Yes	*	No	*
2: Loose hold down clamps	Yes		No	
3: Corroded terminal posts	Yes	*	No	*
4: Physical damage/leaks	Yes		No	
5: Low electrolyte	Yes	*	No	*
6: FEAD belt tension	OK	*	Not OK	*
7: Surface charge removed	Yes	*	No	*
8: Voltage (appendix A)	Yes	*	No	*
9: Quiescent Drain	mA	*		
10: Vent tube correctly installed	Yes		No	
11: Midtronics test				
Code before charging	*			
If Midtronics indicates that the battery needs re-charging, charge the battery for 24 hours				
Code after charge	*			
Result after charge	*			
If "good and re-charge" charge the battery for an additional 24 hours.				
If "charge and re-test" for both before and after 24 hours charge renew the battery				
Only renew the battery if "renew battery", "bad cell" or charge and re-test has been displayed twice.				
Comments				
-				
-				
-				
-				
-				

Published: 28-Sep-2011

Battery and Charging System - General Information - Quiescent Drain

Description and Operation

QUIESCENT DRAIN - TYPICAL VALUES

• NOTE: The quiescent drain after the initial shutdown period should not exceed the value shown in the table.

Jaguar Quiescent Drain Values

MODEL	SHUT DOWN PERIOD (minutes)	TYPICAL VALUES BATTERY DRAIN (mA)
XJS 3.2	60	<30
Sovereign 3.2	60	<37.3
XJ6 4.0	60	<38.6
XJS	60	<43.9
XJ6 (X300) (1995MY)	60	<43
XJ8 (X300)	60	<30
XK8 (X100)	60	<30
S-Type (X200)	60	<30
X-Type (X400)	30	<30
XJ6 (X350)	40	<30
XJ8 (X350)	40	<30
XK (X150)	3 (after lock/arm condition) [2]	<30
	33 (unlocked)	<30
XF (X250)	3 (after lock/arm condition) [2]	<30
	33 (unlocked)	<30
XJ (X351)	3 (afterlock/arm condition) [2]	<30
	33 (unlocked)	<30

• NOTE:

1. The total current drain will be higher if certain approved accessories are fitted (for example: tracker, trailer module, etc.)

2. Applies to vehicles without Tire Pressure Monitoring System (TPMS). Vehicle shut-down period with TPMS is approximately 15 minutes.

Published: 11-May-2011

Battery, Mounting and Cables - Battery and Cables

Description and Operation

The battery has been designed specifically for Jaguar. It provides the high output which is required for this vehicle, but with a substantial saving in weight. It is a low maintenance battery, located on the right hand side of the luggage compartment floor.

The negative (Ground) lead is connected to the vehicle body. The positive lead is connected to a high power protection module; from here power is connected to the starter motor and distributed to other systems on the vehicle.

The high power protection module comprises two fuses, one of 500 amps and one of 175 amps.

To test the battery, follow the test procedure described in Section 414-02 Generator and Regulator of this Manual.

Although these tests will not actually test the battery, they will confirm that the generator, regulator and connecting cables are working correctly and that consequently, the battery may be at fault. Alternatively, the tests may indicate that the fault lies in the generator, regulator or wiring and not in the battery.

Battery

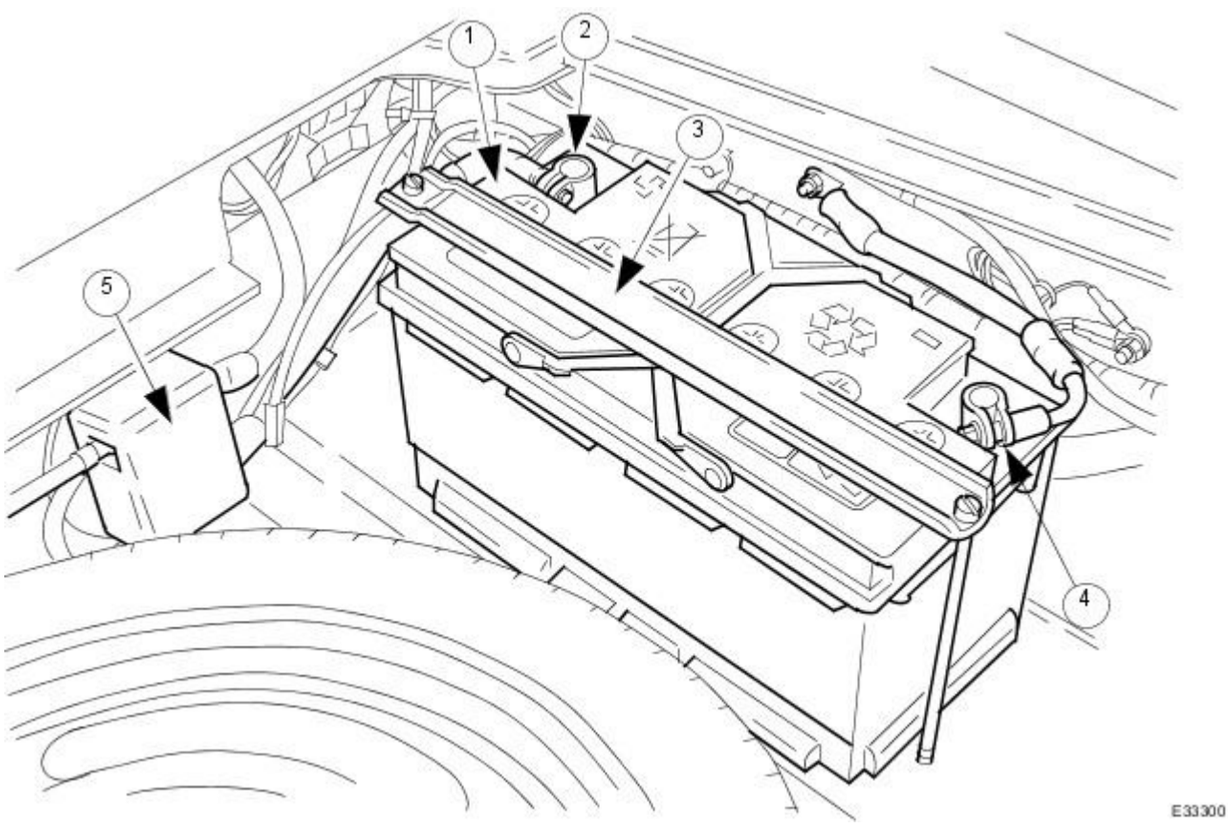

Item	Part Number	Description
1	—	Battery
2	—	Positive Lead
3	—	Battery Hold-Down Clamp
4	—	Negative (Ground) Lead
5	—	High Power Protection Module (Fuses)

Published: 11-May-2011

Battery, Mounting and Cables - Battery Connect

General Procedures

• WARNINGS:

BATTERIES PRODUCE EXPLOSIVE GASES WHICH MAY CAUSE PERSONAL INJURY. DO NOT EXPOSE THE BATTERY TO A NAKED FLAME. WHEN CHARGING OR WORKING NEAR A BATTERY WEAR PROTECTIVE CLOTHING AND EYE PROTECTORS. ALWAYS PROVIDE ADEQUATE VENTILATION. FAILURE TO FOLLOW THESE INSTRUCTIONS MAY RESULT IN PERSONAL INJURY.

BATTERIES CONTAIN SULPHURIC ACID, AVOID CONTACT WITH SKIN, EYES AND CLOTHING. SHIELD YOUR EYES WHEN WORKING NEAR THE BATTERY TO PROTECT AGAINST POSSIBLE CONTACT OF THE ACID SOLUTION. IN CASE OF CONTACT WITH THE SKIN OR EYES, FLUSH IMMEDIATELY FOR A MINIMUM OF 15 MINUTES AND SEEK PROMPT MEDICAL ATTENTION. IF SWALLOWED CALL A PHYSICIAN IMMEDIATELY. FAILURE TO FOLLOW THESE INSTRUCTIONS MAY RESULT IN PERSONAL INJURY.

CAUTION: **Make sure all electrical systems are off before connecting the battery negative cable. Failure to follow these instructions may result in damage to the electrical system.**

• NOTE: Following reconnection of the battery, the engine should be allowed to idle as the stored idle and drive values contained within the engine control module (ECM) have been lost. This may cause driveablity concern if the following procedure is not carried out.

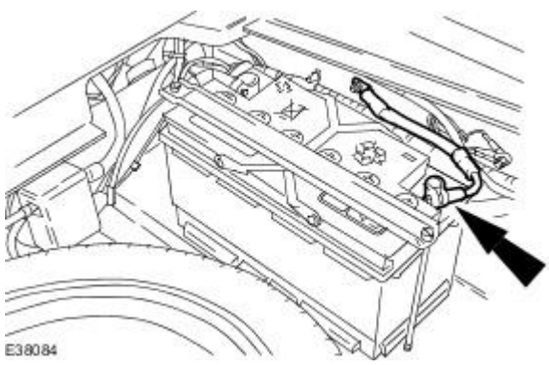

1. Connect the battery ground cable.

- Tighten to 4 Nm.

2. Turn the ignition switch to the ON position.

3. Cycle both door drop glasses up and down to establish the upper and lower datum points.

1. Lower the glass to the stop and hold the switch in the DOWN position for a further five seconds.
2. Raise the glass fully and hold the switch in the UP position for a further five seconds.

4. Start the engine and allow to idle until the engine reaches normal operating temperature.

5. Switch the engine off.

6. Start the engine and allow to idle for approximately two minutes (this will allow the ECM to learn the idle values).

7. Apply and hold the brake pedal, select drive and allow the engine to idle for a further two minutes.

8. Drive the vehicle for approximately five miles/eight kilometers of varied driving to enable the ECM to complete its learning strategy.

9. Reset the audio unit, clock and climate control assembly to original settings to avoid customer complaint.

Published: 11-May-2011

Battery, Mounting and Cables - Battery Disconnect and Connect

General Procedures

• WARNINGS:

BATTERIES PRODUCE EXPLOSIVE GASES WHICH MAY CAUSE PERSONAL INJURY. DO NOT EXPOSE THE BATTERY TO A NAKED FLAME. WHEN CHARGING OR WORKING NEAR A BATTERY WEAR PROTECTIVE CLOTHING AND EYE PROTECTORS. ALWAYS PROVIDE ADEQUATE VENTILATION. FAILURE TO FOLLOW THESE INSTRUCTIONS MAY RESULT IN PERSONAL INJURY.

BATTERIES CONTAIN SULPHURIC ACID, AVOID CONTACT WITH SKIN, EYES AND CLOTHING. SHIELD YOUR EYES WHEN WORKING NEAR THE BATTERY TO PROTECT AGAINST POSSIBLE CONTACT OF THE ACID SOLUTION. IN CASE OF CONTACT WITH THE SKIN OR EYES, FLUSH IMMEDIATELY FOR A MINIMUM OF FIFTEEN MINUTES AND SEEK PROMPT MEDICAL ATTENTION. IF SWALLOWED CALL A PHYSICIAN IMMEDIATELY. FAILURE TO FOLLOW THESE INSTRUCTIONS MAY RESULT IN PERSONAL INJURY.

AUDIO UNIT KEY CODE SAVING DEVICES MUST NOT BE USED WHEN WORKING ON SUPPLEMENTARY RESTRAINT SYSTEMS OR FUEL SYSTEMS. WHEN USING THESE DEVICES THE VEHICLE ELECTRICAL SYSTEM IS STILL LIVE BUT WITH A REDUCED CURRENT FLOW. FAILURE TO FOLLOW THIS INSTRUCTION MAY RESULT IN PERSONAL INJURY.

THE BACKUP POWER SUPPLY ENERGY MUST BE DEPLETED BEFORE ANY SUPPLEMENTARY RESTRAINT SYSTEM REPAIRS ARE CARRIED OUT. TO DEPLETE THE BACKUP SUPPLY ENERGY , FIRST DISCONNECT THE BATTERY NEGATIVE CABLE, THEN DISCONNECT THE BATTERY POSITIVE CABLE AND WAIT ONE MINUTE TO AVOID ACCIDENTAL DEPLOYMENT AND PERSONAL INJURY. FAILURE TO FOLLOW THIS INSTRUCTION MAY RESULT IN PERSONAL INJURY.

CAUTION: Make sure the engine is not running before disconnecting the battery negative cable to avoid damage to the electrical system.

• NOTE: Before disconnecting the battery make sure that no data is required from the engine control module (ECM), as battery cable disconnection will erase any fault codes and idle/drive values held in the keep alive memory (KAM). It is not necessary to disconnect or remove electronic control modules.

• NOTE: When the battery is disconnected all previous climate control assembly settings and fault codes will be lost. It is necessary to record any settings or fault codes before battery disconnection to prevent customer complaint.

• NOTE: This procedure should be used to disconnect the battery while carrying out repairs that refer to the battery being disconnected.

1. Obtain and record the audio unit keycode and preset radio frequencies.

2. Remove the luggage compartment floor covering.

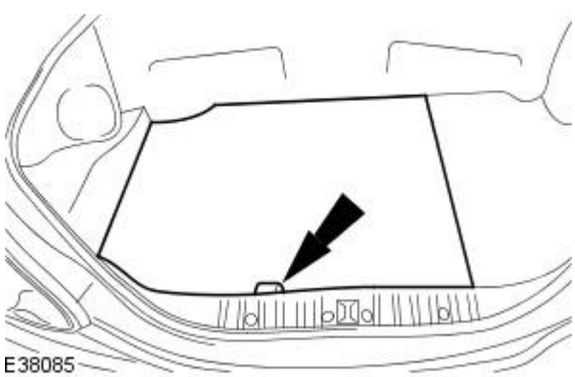

3. Remove the battery cover.

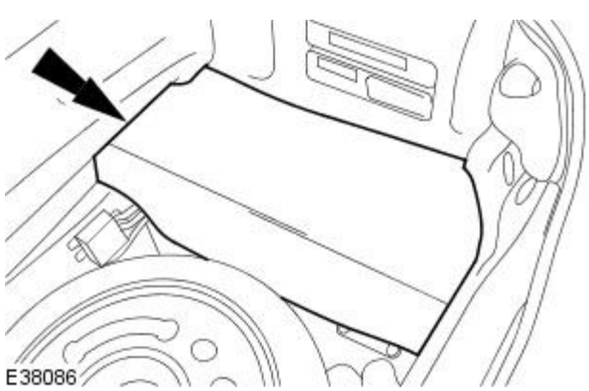

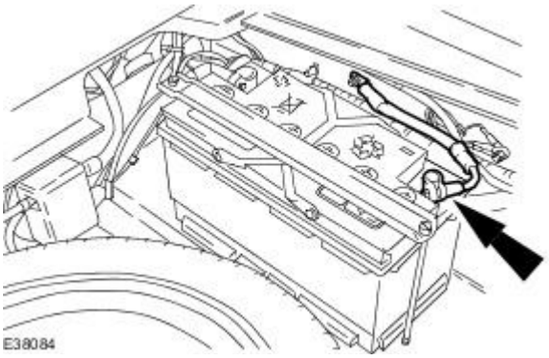

4. Disconnect the battery ground cable.

Battery, Mounting and Cables - Battery

Removal and Installation

Removal

1. Open the driver's door, or both doors if necessary, to allow the side glass to drop. Ensure that the doors remain open until after the battery has been disconnected.
2. Remove the luggage compartment floor panel (when standard size spare wheel is supplied) and the cover from the battery.
3. Disconnect the battery cables.
   - Disconnect the ground cable.
   - Disconnect the positive cable.
     1. Disconnect the vent pipe.

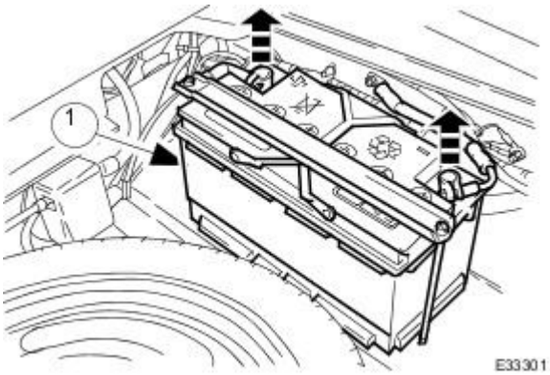

4. Remove the battery.
   1. Remove the two bolts which secure the battery clamp.
   2. Remove the clamp.
   3. Remove the battery.

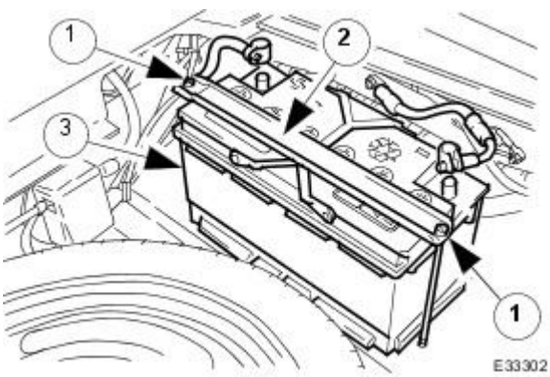

Installation

1. Installation is the reverse of removal.
2. Perform the Battery Reconnection Procedure described in this section.

Published: 11-May-2011

Battery, Mounting and Cables - Battery Ground Cable

Removal and Installation

Removal

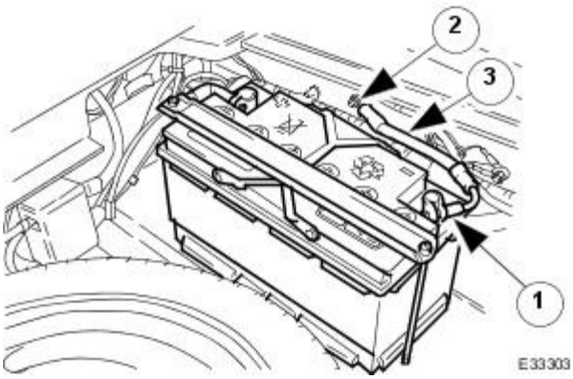

1. Open the driver's door, or both doors if necessary, to allow the side glass to drop. Ensure that the doors remain open until after the battery has been disconnected.
2. Remove the luggage compartment floor panel (when standard size spare wheel is supplied) and the battery cover.
3. Remove the negative lead.
   - Reposition the front edge of the side trim for access to the ground stud.
     1. Slacken the clamp of the negative lead at the battery terminal. Disconnect the negative lead from the battery terminal.
     2. Remove the nut from the ground stud.
     3. Remove the negative lead.

Installation

1. Installation is the reverse of removal.
2. Perform the Battery Reconnection Procedure described in this section.

Battery, Mounting and Cables - Battery Positive Cable

Removal and Installation

Removal

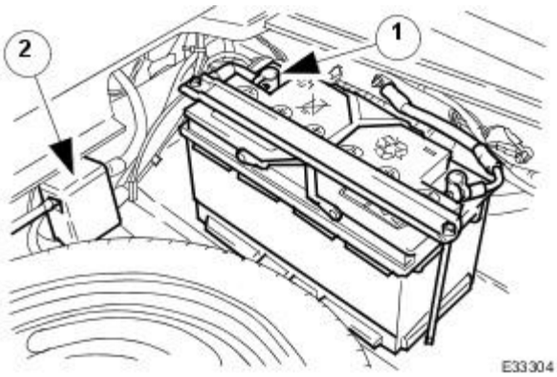

1. Disconnect the battery ground cable.
   For additional information, refer to Section 414-01 Battery, Mounting and Cables.
2. Disconnect the positive lead.
   1. Slacken the clamp of the positive lead at the battery terminal. Disconnect the positive lead from the battery terminal.
   2. Remove the cover from the high power protection module for access to the positive supply stud.

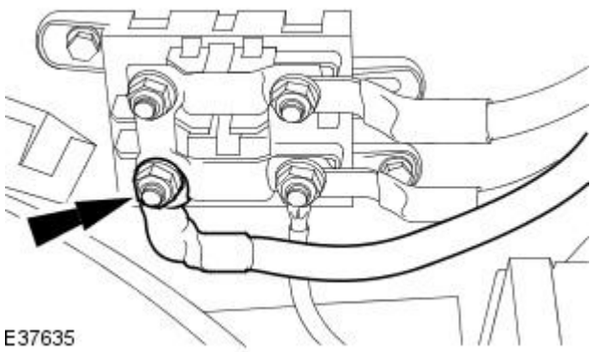

3. Remove the positive lead.

Installation

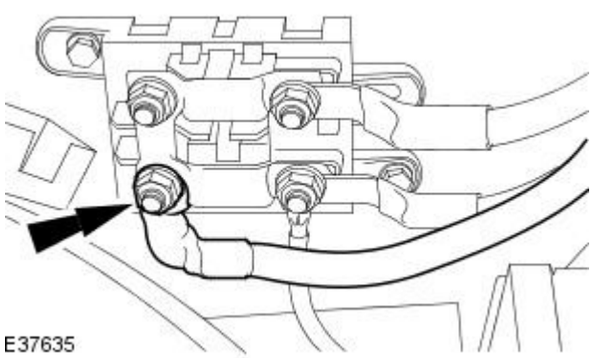

1. To install, reverse the removal procedure.
   - Tighten to 10 Nm.
2. Tighten the positive lead to battery terminal retaining clamp to 4 Nm.
3. Connect the battery ground cable.
   For additional information, refer to Battery Ground Cable in this section.

Published: 11-May-2011

Battery, Mounting and Cables - Battery Retaining Bracket

Removal and Installation

Removal

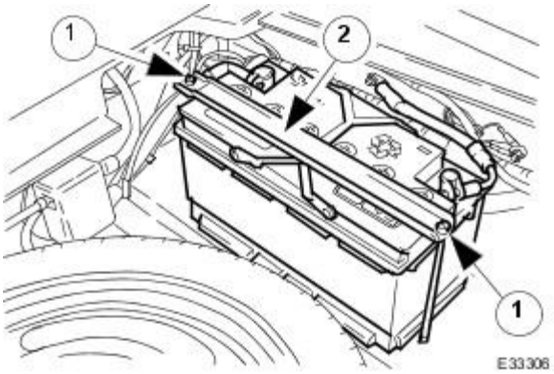

1. Open the driver's door, or both doors if necessary, to allow the side glass to drop. Ensure that the doors remain open until after the battery has been disconnected.
2. Remove the luggage compartment floor panel (when standard size spare wheel is supplied) and the cover from the battery.
3. Disconnect the battery terminal ground cable.
4. Remove the battery hold-down clamp.
    1. Remove the two bolts which secure the battery hold-down clamp.
    2. Remove the hold-down clamp.

Installation

1. Installation is the reverse of removal.
2. Perform the Battery Reconnection Procedure described in this section.

Published: 11-May-2011

Generator and Regulator -

Torque Specifications

Description	Nm	lb-ft	lb-in
Generator upper retaining bolt	21	15	-
Generator lower retaining nut and bolt	40	30	-
Battery cable retaining nut	12	9	-

Published: 11-May-2011

Generator and Regulator - Generator

Description and Operation

The charging system consist of a 130 amp output, SC1, generator and regulator assembly. The generator and regulator assembly generates electrical power to the vehicle electrical system with electricity when the engine is running and maintains the battery in a charged state.

The generator is belt driven by the accessory drive belt.
For additional information, refer to Section 303-05 Accessory Drive.
When the engine is started, the generator begins to generate alternating current (AC) which is converted to direct current (DC) internally. The DC current and voltage is controlled by the voltage regulator, (located inside the generator) and then supplied to the battery through the main battery positive cable.

The battery charging voltage is determined by the temperature of the generator. In cold conditions, starting the vehicle from cold the battery voltage will be between 14.2 volts and 15.1 volts and will reduce as the engine warms up. In hot conditions starting the vehicle when the engine is already warm the battery voltage will be between 13.5 volts and 14.3 volts.

A fault in the wiring from the generator to the battery junction box, will cause a fault code to be generated and stored in the ECM and the charge warning indicator lamp to be displayed in the instrument cluster after a short time.

With the ignition switch in the RUN position the charge warning lamp will be displayed in the instrument cluster when the generator is not generating power.

If a fault is detected with the generator a fault code will be generated and stored by the ECM. The charge warning indicator lamp will also be displayed in the instrument cluster. Units should be replaced as an assembly and not dismantled for repair.

Published: 11-May-2011

Generator and Regulator - Generator

Diagnosis and Testing

For additional information, refer to sectionSection 414-00 Battery and Charging System - General Information

Generator and Regulator - Generator

Removal and Installation

Removal

All vehicles

1. Disconnect the battery ground cable.
For additional information, refer to Section 414-01 Battery, Mounting and Cables.

Vehicles without supercharger

2. Remove the oil filler cap.

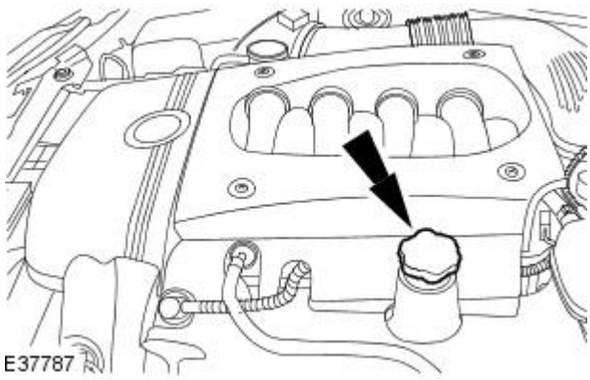

3. Remove the engine cover.

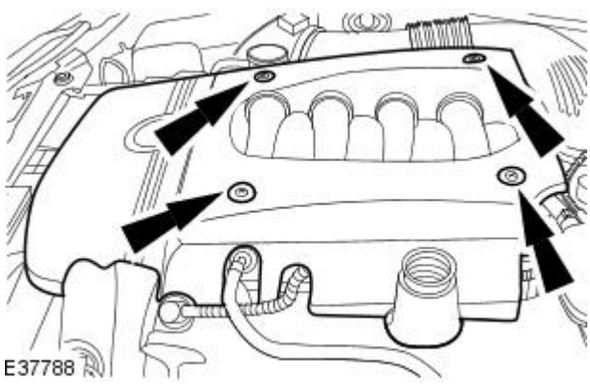

All vehicles

4. Detach the accessory drive belt.

1. Rotate the accessory drive belt tensioner counter clockwise
   1. Use a 3/8 inch square drive bar to rotate the accessory drive belt tensioner.
2. Detach the accessory drive belt.

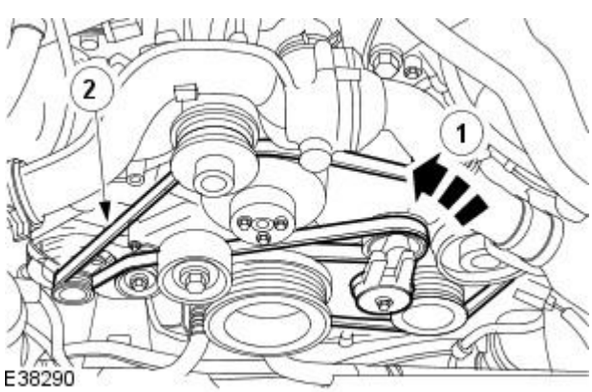

5. Raise and support the vehicle.
For additional information, refer to Section 100-02 Jacking and Lifting.

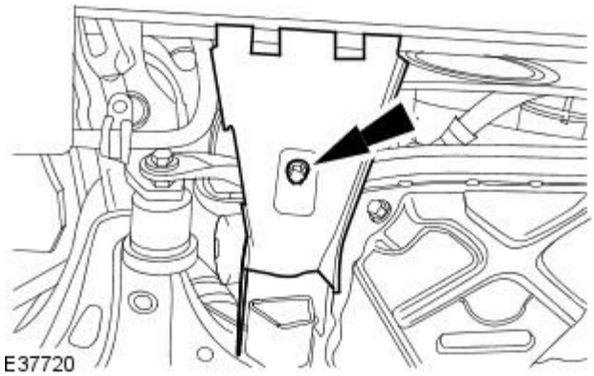

6. Remove the generator lower cooling duct.

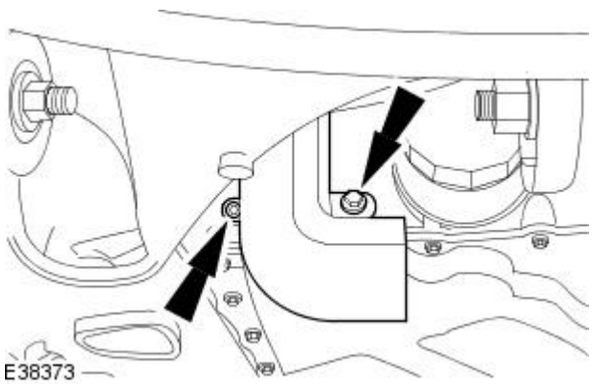

7. Remove the generator upper cooling duct.

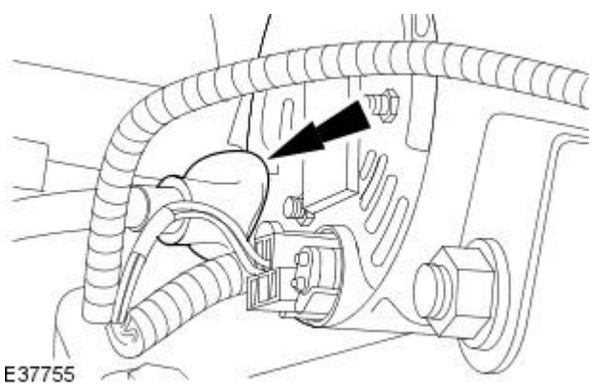

8. Reposition the battery cable shroud.

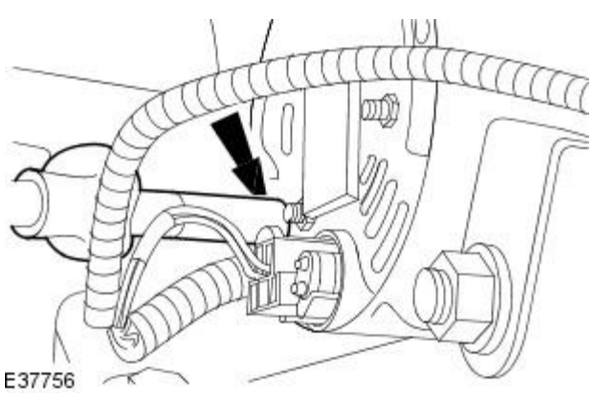

9. Disconnect the battery cable.

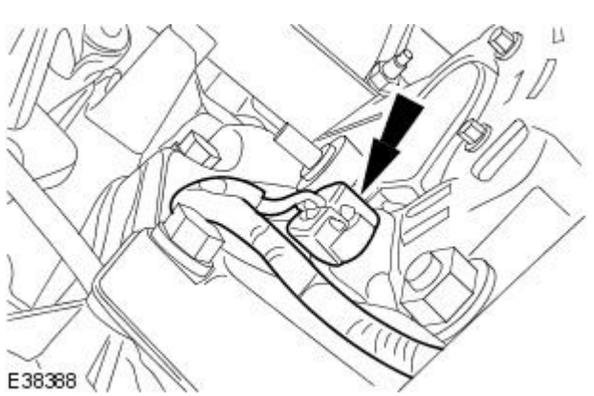

10. Disconnect the generator electrical connector.

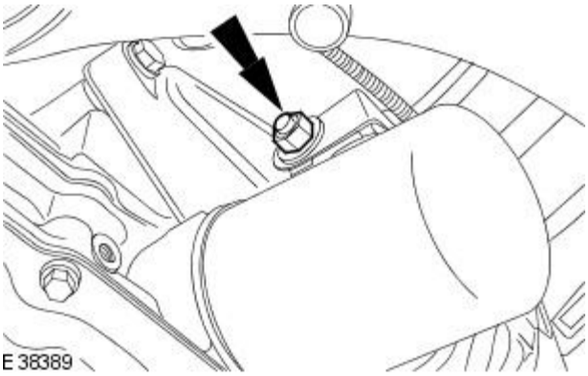

11. Remove the generator lower retaining nut and bolt.

12. Lower the vehicle.

Vehicles with supercharger

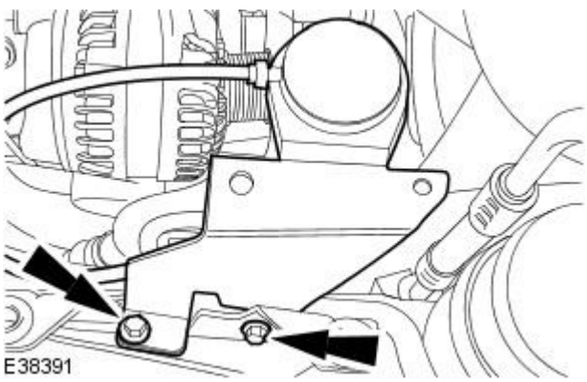

13. Detach the supercharger water pump bracket assembly.

All vehicles

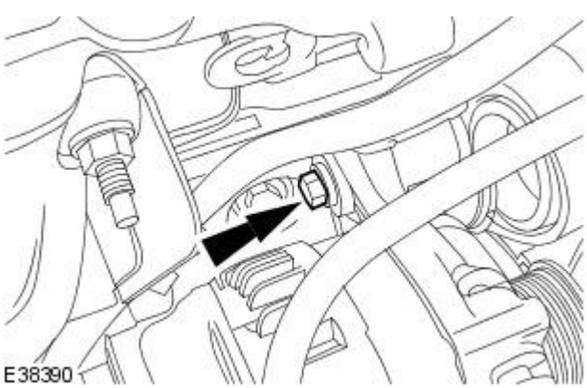

14. Remove the generator upper retaining bolt.

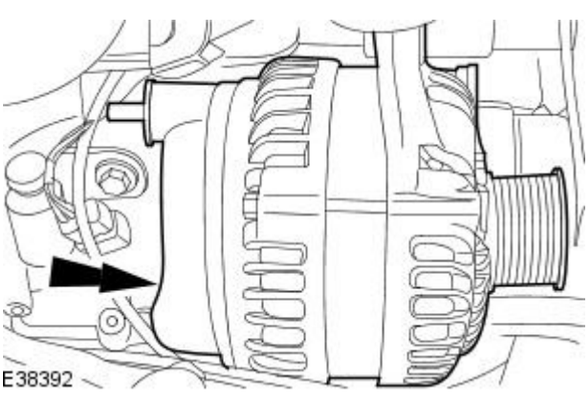

15. Remove the generator.

Installation

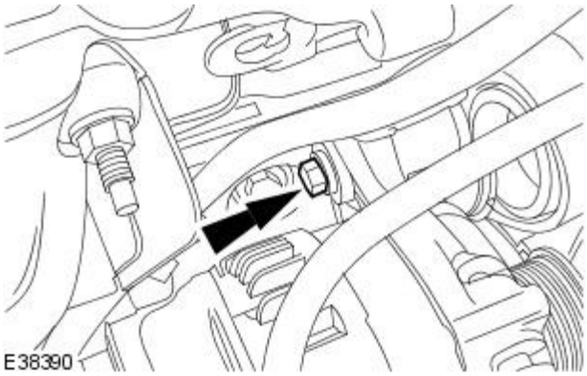

1. To install, reverse the removal procedure.

1. Tighten to 21 Nm.

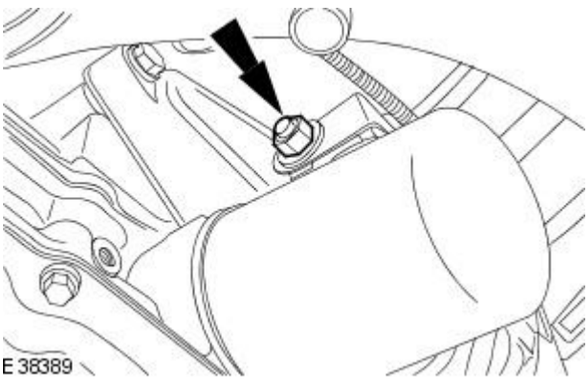

2. Tighten to 40 Nm.

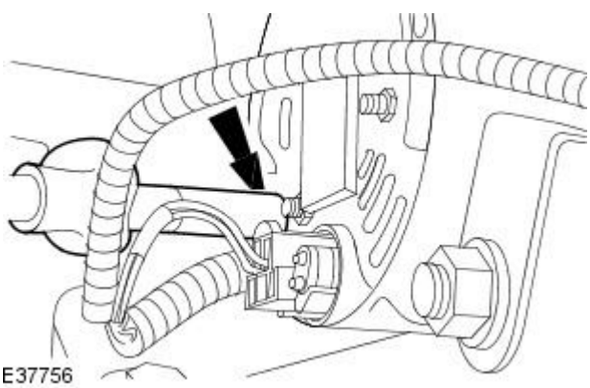

3. Tighten to 12 Nm.

Published: 11-May-2011

Audio Unit - Audio System

Description and Operation

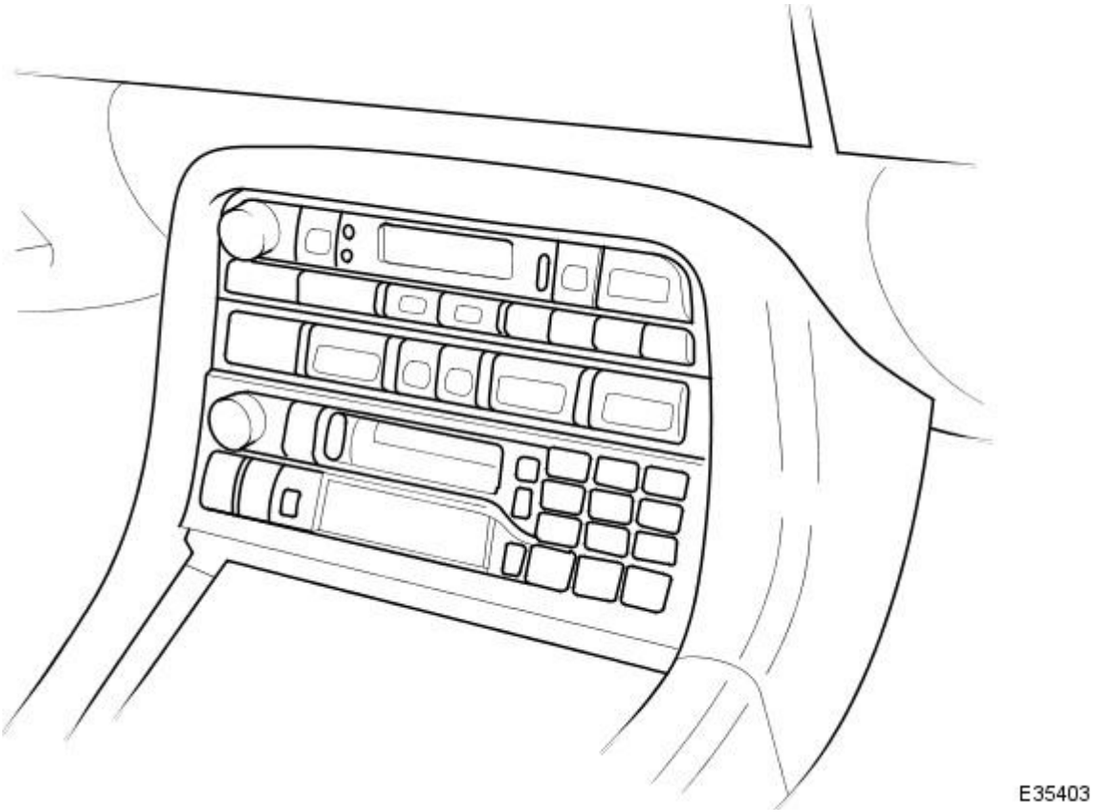

Base or premium specification audio systems are available and switches on the steering wheel provide for remote operation in each case. The radio and electrically operated aerial are also common to both systems

An identical audio unit is installed in both systems. On initial installation this is matched to the appropriate system by selecting the STD or PRM switch position on the underside of the unit chassis.

Telephone controls incorporated in the audio unit facilitate installation of a GSM hands-free telephone system available as an option.

Base Audio System

The base system audio unit incorporates integral message display and 'Phone Ready' controls for installation of a GSM hands-free telephone system. A CD autochanger is installed in the trunk and six speakers are located two at each side of the facia and one in each door and rear quarter.

Premium Audio System

As in the base system, the audio unit incorporates integral message display and 'Phone Ready' controls, and a CD autochanger is installed in the trunk. The premium audio system also includes an amplifier unit installed in the trunk a sub-woofer speaker on the rear parcel shelf (a sub-woofer in each rear quarter on convertible models), two mid-range speakers in each door, a mid-range speaker in each rear quarter and a tweeter at each side of the facia.

Navigation System Interface.

An optional integrated navigation system supplied with the vehicle, or as a service fit accessory, interfaces with either of the above systems to provide control of voice guidance volume. All other navigation system functions are controlled from a separate display/controls panel installed in the facia above the audio unit.

Audio Unit - Audio System

Diagnosis and Testing

Tests Using the Portable Diagnostic Unit

Refer to PDU User Guide

The PDU is unable to diagnose radio head faults; there are no self-diagnostics associated with the radio.

PDU is able to test the speakers and the antenna, along with associated wiring and connections, therefore by a process of elimination, the radio head can be diagnosed.

Audio Unit - Audio Unit

Removal and Installation

Removal

1. Remove battery cover and disconnect ground lead from terminal. Refer to 86.15.19.
2. Remove 'J' gate surround. Refer to 76.25.24.
3. Move gear selector to 'D'.
4. Remove center console assembly for access. Refer to 76.25.01.
5. Remove the six radio console securing screws and partially withdraw the console for access.

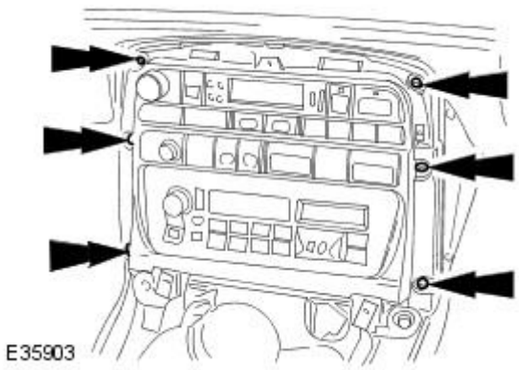

6. Disconnect radio assembly.
   - Disconnect console harness multiplugs and aerial co-axial connector.
   - Remove nut securing earth lead to radio and remove lead from stud.
   - Disconnect radio harness multiplug and position harness clear of center console.
   - Disconnect compact disc player 'Din' plug from radio.

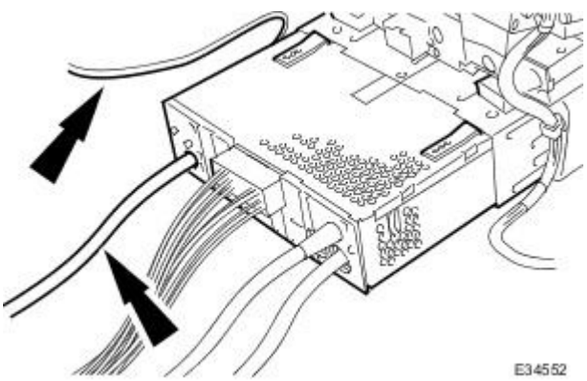

7. Remove radio.
   1. Release spring retaining clips, remove radio from console and remove radio from mounting panel.

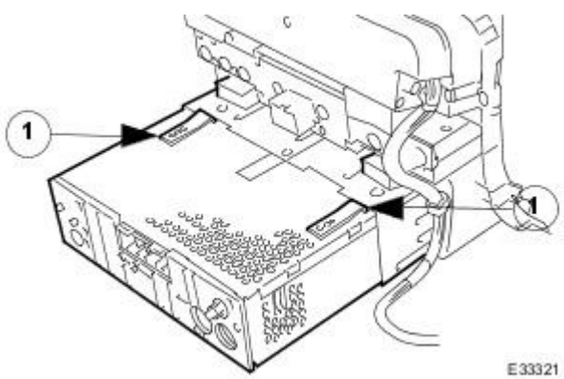

Installation

1. Slide radio into mounting panel and position at console for access.
2. Connect aerial co-axial lead to radio and stow excess harness and lead lengths in radio mounting aperture.
3. Fully seat radio in console, ensuring that retaining clips are fully seated and harnesses and leads do not obstruct.
4. Install radio mounting panel on the console.
5. Holding radio console in position, route radio harness multiplugs into center console.
6. Connect radio harness and radio console harness multiplugs.
7. Route ground and aerial leads through radio console.
8. Finally position radio console and install the six securing screws.
9. Position ground lead on radio stud and install securing nut.
10. Connect aerial lead to radio.
11. Ensuring harness and leads do not obstruct, push radio fully home.

12. Install center console. Refer to 76.25.01.
13. Return gear selector to 'P'.
14. Install 'J' gate surround. Refer to 76.25.24.
15. Connect ground cable to battery terminal and install battery cover. Refer to 86.15.15.

Audio Unit - Audio Unit Amplifier

Removal and Installation

Removal

1. Remove battery cover and disconnect ground cable from battery terminal. Refer to 86.15.19.
2. Remove RH side liner from trunk. Refer to 76.19.22.
3. Disconnect amplifier harness multiplugs.

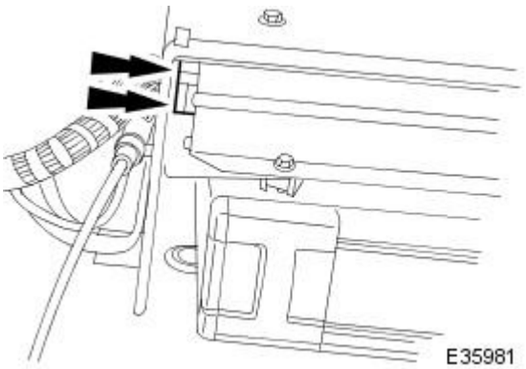

4. Disconnect CD autochanger data cable.

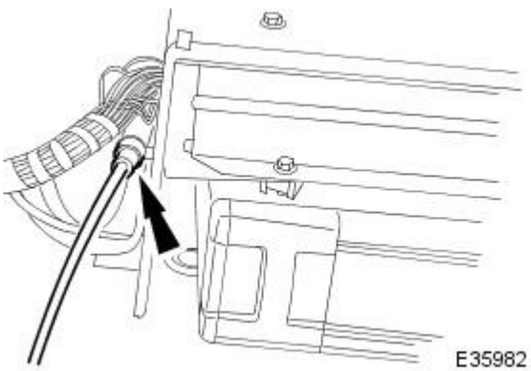

5. Remove upper bolts securing amplifier mounting bracket to outer mounting bracket.

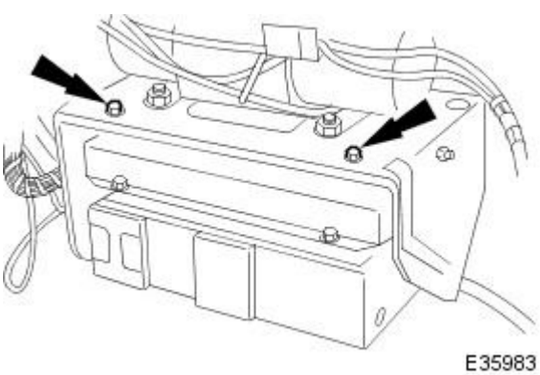

6. Remove side bolts securing amplifier mounting bracket to outer mounting bracket.

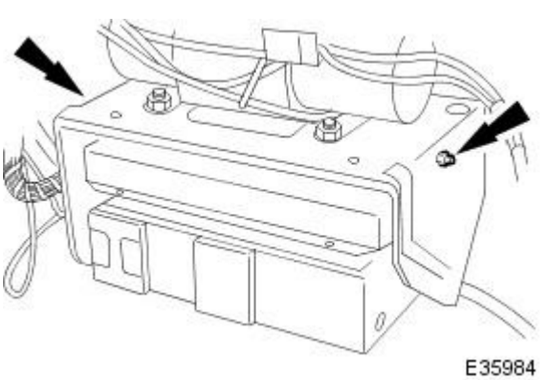

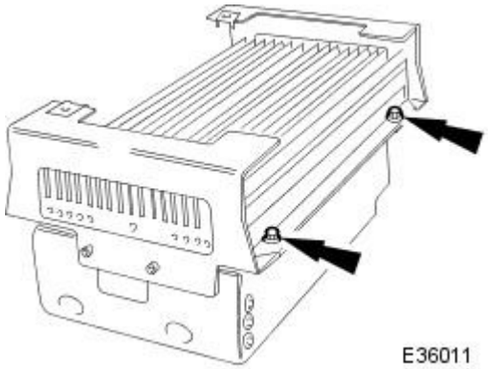

7. Withdraw amplifier/mounting bracket assembly from trunk and remove bolts securing amplifier to bracket.

Installation

1. Position amplifier on mounting bracket and install securing bolts.
2. Position amplifier/mounting bracket assembly in trunk.
3. Install upper bolts securing amplifier mounting bracket to outer mounting bracket.
4. Install side bolts securing amplifier mounting bracket to outer mounting bracket.
5. Connect amplifier harness multiplugs.
6. Connect CD autochanger data cable.
7. Install trunk RH liner .
8. Connect ground cable to battery terminal and install battery cover. Refer to 86.15.15.

Audio Unit - Capacitor

Removal and Installation

Removal

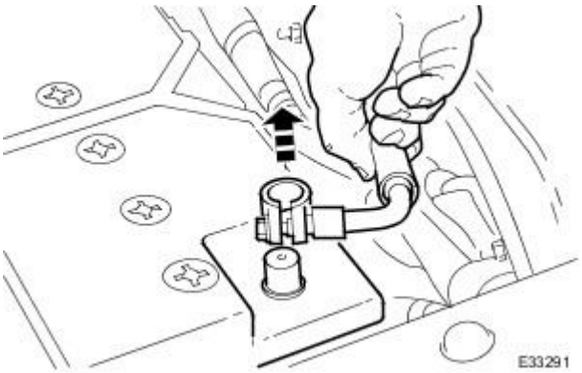

1. Open the driver's door, or both doors if necessary, to allow the side windows to drop. Ensure that the doors remain open until after the battery has been disconnected.
2. Disconnect the battery ground cable.
   - Remove the battery cover.

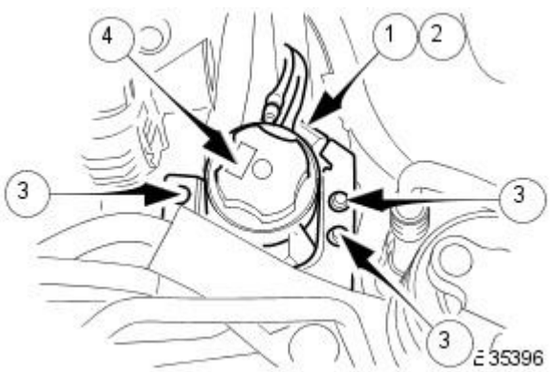

3. Raise the vehicle on a ramp.
4. Disconnect the multi-plug from the mounting bracket clip.
   1. Disconnect the multi-plug.
   2. Remove the three bolts which secure the suppression module to the mounting bracket.
   3. Remove the suppression module.

Installation

1. Connect the battery ground cable. Refit the battery cover.
2. Reconnect the battery in accordance with 414-01.

Audio Unit - Compact Disc (CD) Changer

Removal and Installation

Removal

1. Remove battery cover and disconnect ground cable from battery terminal. Refer to 86.15.19.
2. Remove RH side liner from trunk. Refer to 76.19.22.
3. Premium ICE only:
   - Disconnect amplifier harness multiplugs.

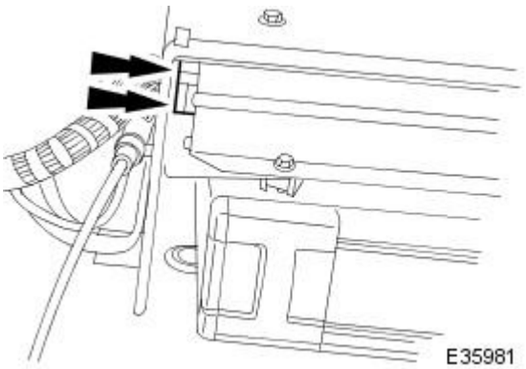

4. Disconnect CD autochanger data cable.

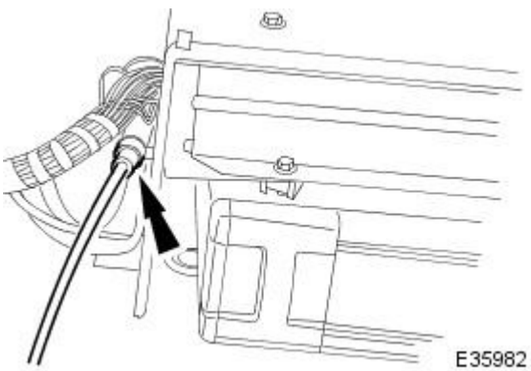

5. Remove upper bolts securing autochanger mounting bracket to outer mounting bracket.

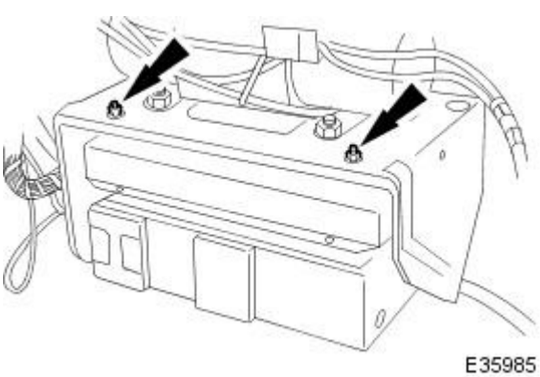

6. Remove side bolts securing autochanger mounting bracket to outer mounting bracket

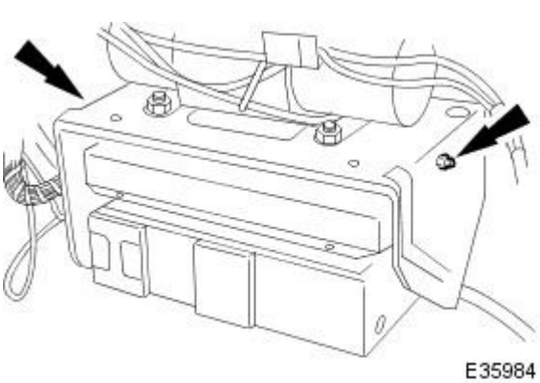

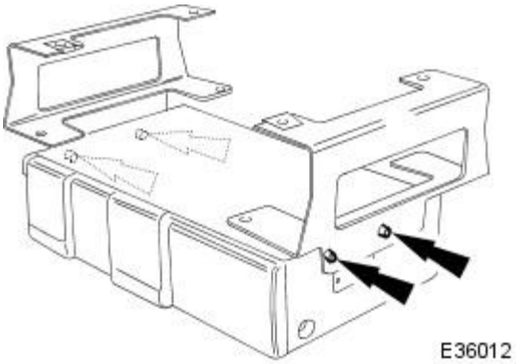

7. Withdraw autochanger/mounting bracket assembly from trunk and remove four bolts securing autochanger to bracket.

Installation

1. Position autochanger on mounting bracket and fit and install securing bolts.
2. Position autochanger/mounting bracket assembly in trunk.
3. Install upper bolts securing autochanger mounting bracket to outer mounting bracket.
4. Install side bolts securing autochanger mounting bracket to outer mounting bracket.
5. Connect amplifier harness multiplugs.
6. Connect CD autochanger data cable
7. Install trunk RH liner .
8. Connect ground cable to battery terminal and install battery cover. Refer to 86.15.15.

Published: 11-May-2011

Antenna - Antenna

Description and Operation

The electrically operated antenna operates automatically when the Ignition switch is set to position 1 or 2, and the radio is switched on.

Published: 11-May-2011

Antenna - Antenna

Diagnosis and Testing

Tests Using the Portable Diagnostic Unit

Refer to PDU User Guide

The PDU tests whether or not the antenna raises and lowers correctly. Although it is obvious if the antenna is not operating, the PDU analyses why it is not operating and indicates problems such as a faulty radio head signal output, faulty wiring, loss of power due to a blown fuse - two fuses in the fascia end fusebox left side and one in the luggage compartment fusebox.

Antenna - Antenna Motor

Removal and Installation

Removal

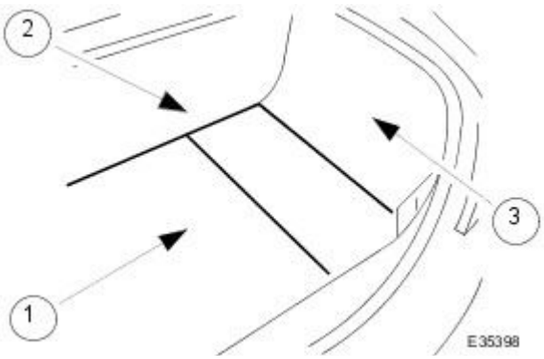

1. Remove the carpet and trim panels from the luggage compartment. For detailed information see 501-05.

1. Remove the carpet.
2. Remove the front liner.
3. Remove the liner from the right hand side.

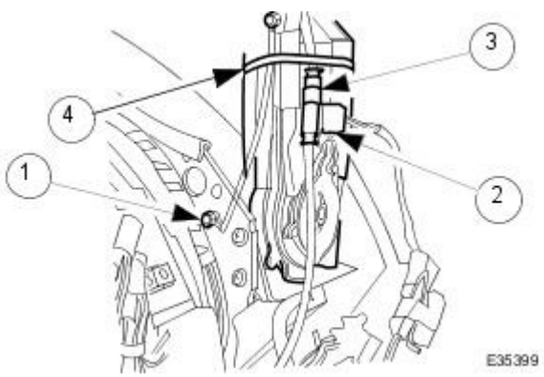

2. Disconnect the electrical connections from the antenna.

1. Remove the bolt which secures the ground lead to the vehicle body. Disconnect and remove the lead.
2. Disconnect the multi-plug from the motor.
3. Disconnect the antenna lead.
4. Remove the tie-strap which secures the harness to the antenna body.

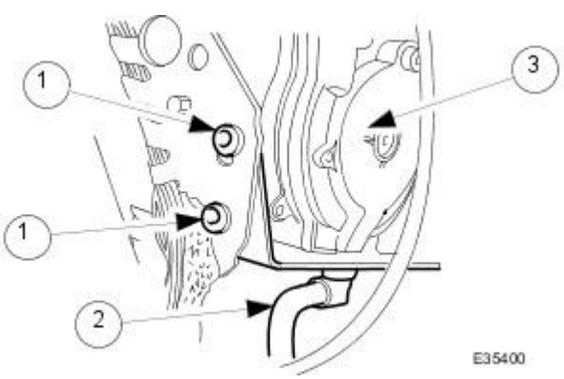

3. Remove the antenna.

1. Remove the two bolts which secure the antenna mounting bracket to the vehicle body.
2. Reposition the drain tube of the antenna, through the body grommet in the luggage compartment floor.
3. Remove the antenna from through the body grommet.

4. Remove the drain tube from the antenna.

Installation

1. Installation is the reverse of removal. Lubricate the vehicle body grommets with soap solution or rubber lubricant.

Antenna - Antenna

Removal and Installation

Removal

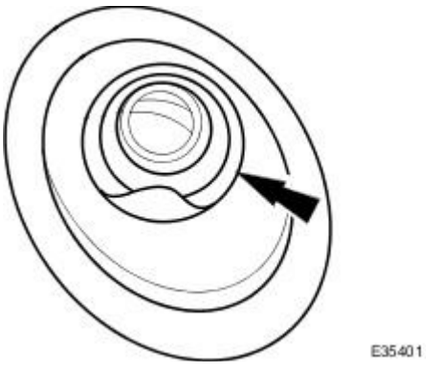

1. Loosen the mast retaining nut.

2. Remove the mast.
   - Switch ON the ignition and the radio.
   - Allow the antenna to fully extend.
   - Remove the mast, noting the position of the teeth on the cable - towards the side of the vehicle.
   - Switch OFF the ignition.

Installation

1. Installation is the reverse of removal.

Speakers - Speakers

Description and Operation

Speaker Location - Coupe

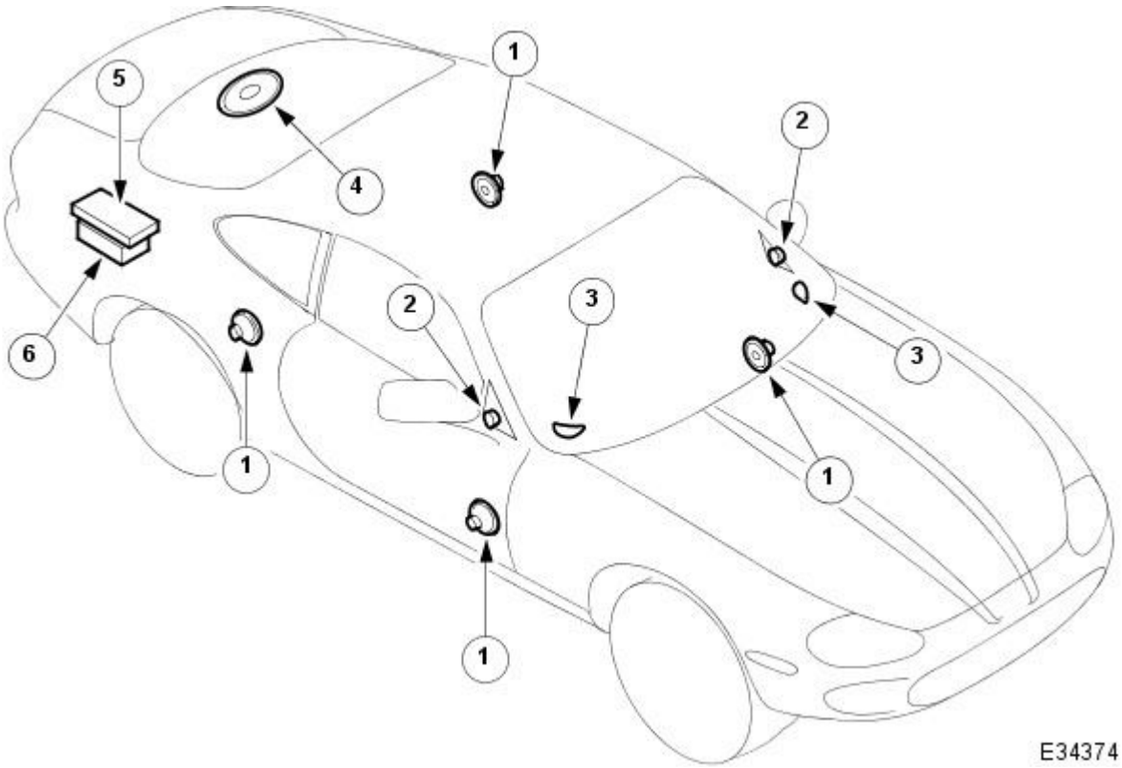

Item	Part Number	Description
1	—	Base System - 152 mm Triple Cone
1	—	Base System - 152 mm Triple cone
3	—	Premium System - Mirror Panel Tweeter
4	—	Premium System - 200 mm Sub Woofer
5	—	Premium System - Amplifier
6	—	Premium System - CD Autochanger

Both coupe and convertible with the standard entertainment system use a common speaker configuration.

Vehicles with the premium entertainment system have a different configuration for each model.

Speaker Location - Convertible

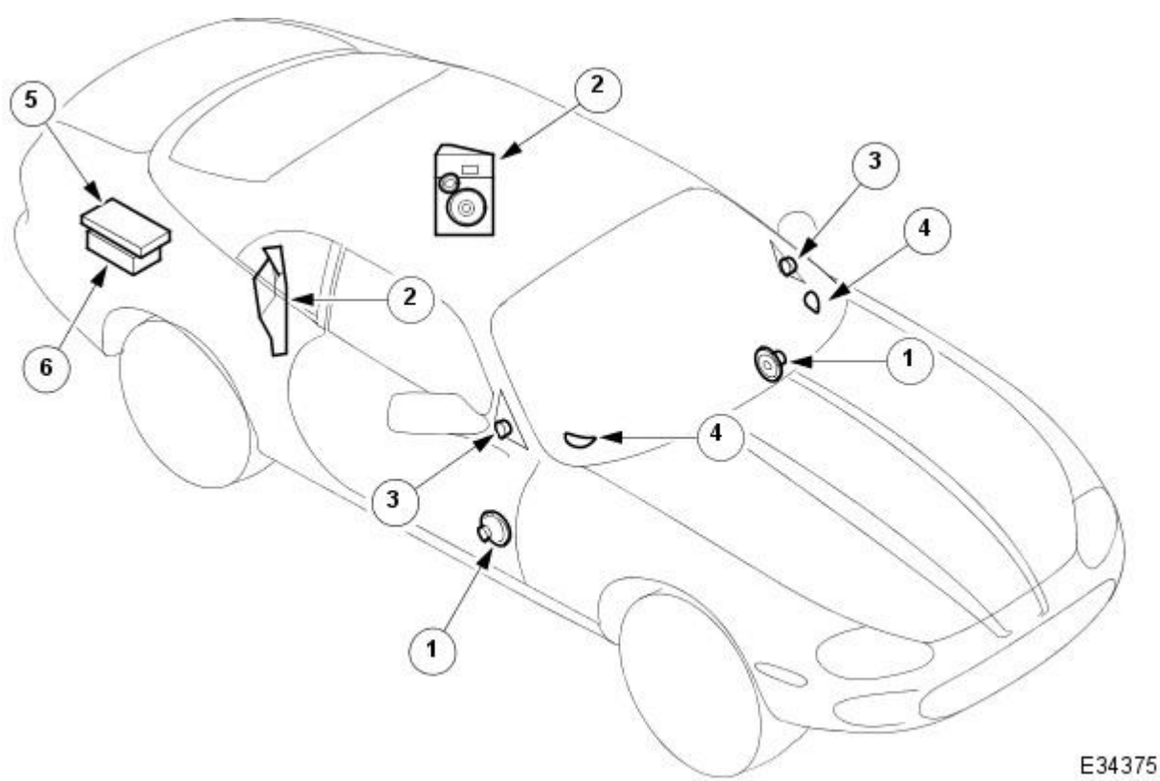

Item	Part Number	Description
1	—	Base System - 152 mm Triple Cone
2	—	Base System - 152 mm Triple Cone

1	—	Premium System - 152 mm Mid / Bass
2	—	Premium System - Enclosure with 152 mm Long Throw Sub-Woofer and 64 mm Mid Range
3	—	Premium System - Mirror Panel Tweeter
4	—	Premium System - Fascia 64 mm Mid Range
5	—	Premium System - Amplifier
6	—	Premium System - CD Autochanger

Published: 11-May-2011

Speakers - Speakers

Diagnosis and Testing

Tests Using the Portable Diagnostic Unit

Refer to PDU User Guide

PDU can test whether or not each speaker operates correctly and analyses why it is not operating.

It indicates problems such as a faulty radio head output power signal, faulty power amplifier (where fitted), faulty wiring, loss of power due to a blown fuse.

Speakers - Door Speaker

Removal and Installation

Removal

1. Open the driver's door, or both doors if necessary, to allow the side glass to drop. Ensure that the doors remain open until after the battery has been disconnected.
2. Disconnect the battery ground cable.
   - Remove the battery cover.

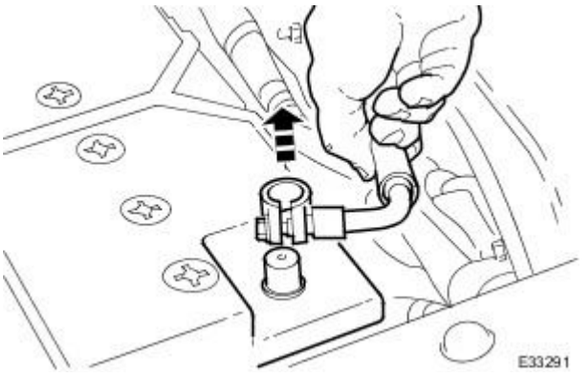

3. Remove the trim pad from the door; refer to 501-05.
4. Remove the door speaker from the door.

E33317

   1. Remove the four bolts which secure the speaker.

5. Disconnect and remove the speaker.

E33318

   1. Support the speaker, disconnect the multi-plug and remove the speaker.

Installation

1. Installation is the reverse of removal, noting that the battery must be reconnected in accordance with 414-01.

Published: 11-May-2011

Speakers - Instrument Panel Tweeter Speaker

Removal and Installation

Removal

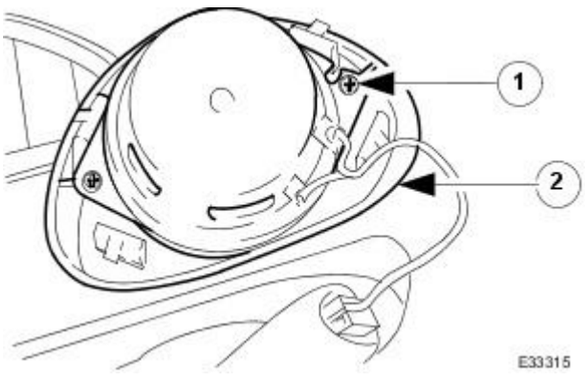

1. Using a wide flat blade, carefully ease the speaker / grille assembly from the fascia. Disconnect the speaker multi-plug.

2. Remove the speaker from the speaker grille.

1. Remove the two screws which secure the speaker to the grille.
2. Place the grille aside

Installation

1. Installation is the reverse of removal.

Speakers - Instrument Panel Tweeter Speaker Grille

Removal and Installation

Removal

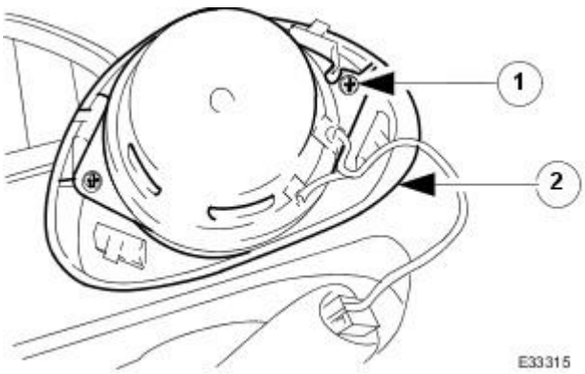

1. Using a wide flat blade, carefully ease the speaker / grille assembly from the fascia. Disconnect the speaker multi-plug.

2. Remove the speaker from the speaker grille.

1. Remove the two screws which secure the speaker to the grille.
2. Place the grille aside

Installation

1. Installation is the reverse of removal.

Speakers - Quarter Panel Speaker2-Door

Removal and Installation

Removal

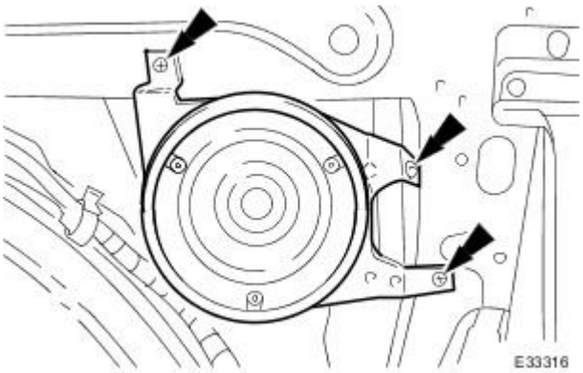

1. Remove the rear quarter armrest / speaker cover for access; refer to 501-05.
2. Remove the rear speaker.
   - Remove the three screws which secure the speaker.
   - Support the speaker, disconnect the multi-plug and remove the speaker.

Installation

1. Installation is the reverse of removal.

Speakers - Quarter Panel SpeakerConvertible

Removal and Installation

Removal

1. Remove rear seat cushion. Refer to 76.70.37.
2. On convertible model only, remove rear seat squab. Refer to 76.70.38.
3. On convertible model only, remove rear quarter casing capping. refer to 76.13.73.
4. Remove rear quarter casing. Refer to 76.13.73
5. Disconnect harness mutliplugs from speaker assembly.

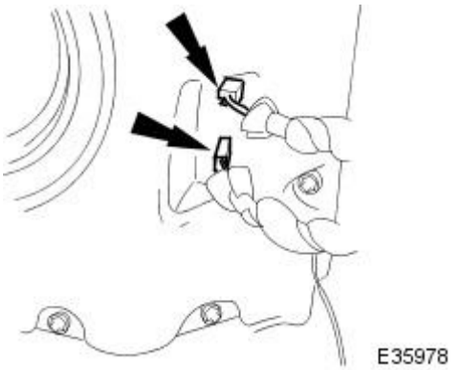

6. Release security aerial retaining clip from speaker assembly and position aerial clear.

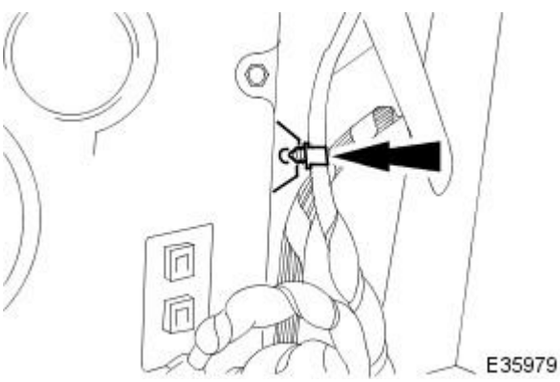

7. Remove nuts and bolts securing speaker assembly to BIW.

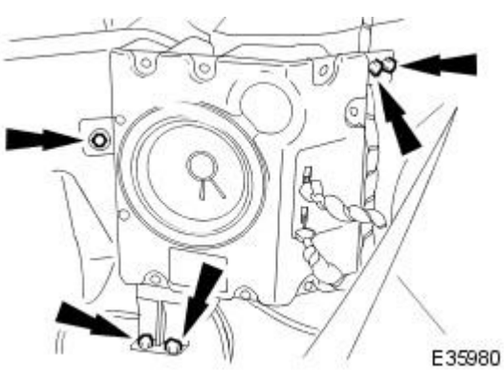

8. Remove speaker assembly from vehicle.

Installation

1. Position speaker assembly in vehicle.
2. Install speaker assembly securing nuts and bolts.
3. Install security aerial clip on speaker assembly.
4. Connect speaker harness multiplugs.
5. Install rear quarter casing. Refer to 76.13.73.
6. Install rear quarter casing capping. Refer to 76.13.73.
7. Install rear seat squab. Refer to 76.70.38.
8. Install rear seat cushion. Refer to 76.70.37.

Published: 11-May-2011

Speakers - Quarter Panel Speaker Grille2-Door

Removal and Installation

Removal

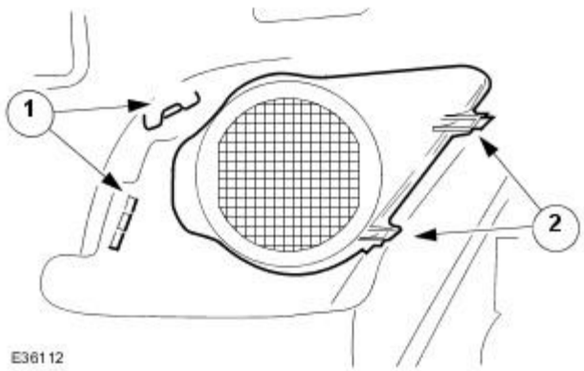

1. Using rear passenger entry knob, fold seat back fully forward.

2. Remove speaker cover from casing.

1. Lift the two speaker cover front fasteners out of rear quarter casing spring clips.
2. Move cover forward to release two rear plastic tangs from casing and remove cover from the casing.

Installation

1. Fit speaker cover to rear quarter casing.

- Position speaker cover and locate rear retaining tangs in casing.
- Press and fully seat the two front retaining fasteners in the casing spring clips.

2. Return seat back to upright position.

Speakers - Subwoofer Speaker2-Door

Removal and Installation

Removal

E35404

1. Move front seat back to fully forward position.
2. Carefully lift front edge of speaker cover to release front and side clips from rear parcel shelf.

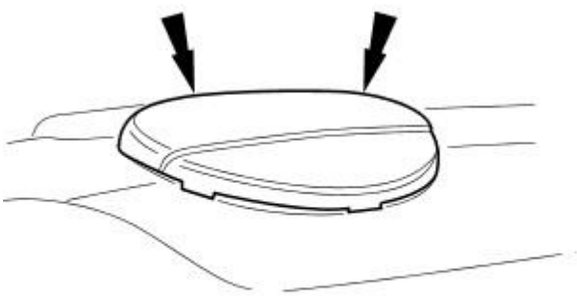

E35405

3. Move speaker cover forward to release rear clips from parcel shelf.

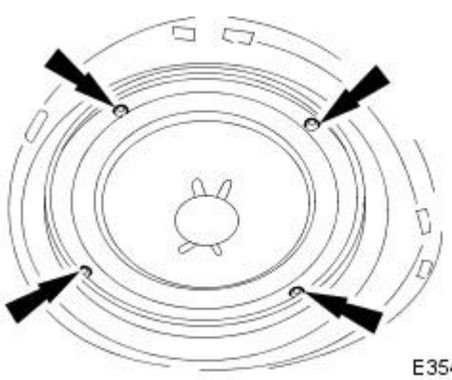

E35406

4. Remove speaker cover.
5. Remove speaker securing screws.

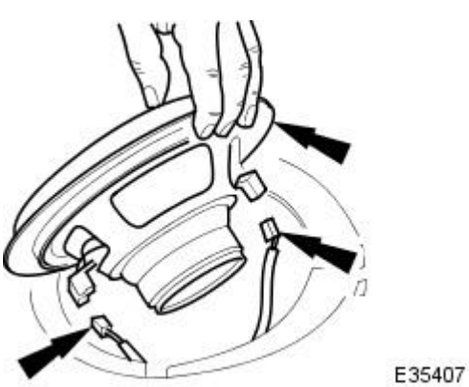

E35407

6. Position sub-woofer speaker for access and disconnect harness connectors.
7. Remove speaker from parcel shelf.

Installation

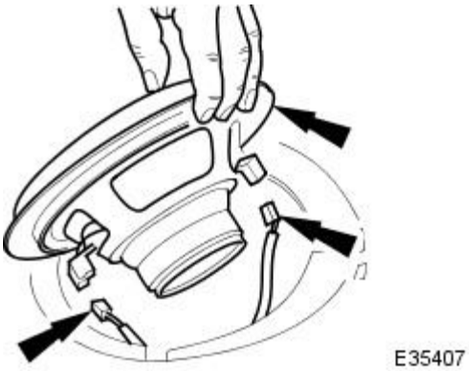

1. Position speaker on parcel shelf and connect harness connectors.

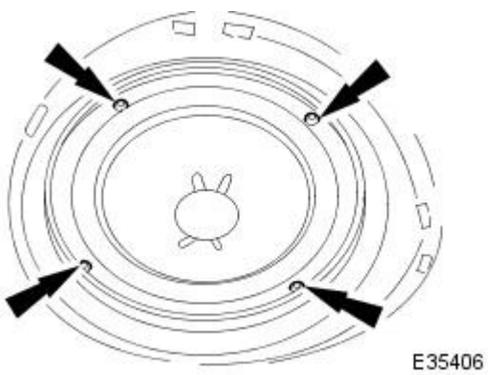

2. Install speaker securing screws.

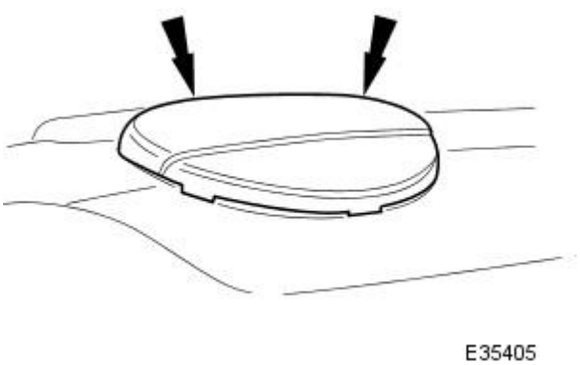

3. Position speaker cover on parcel shelf and engage rear clips in slots.

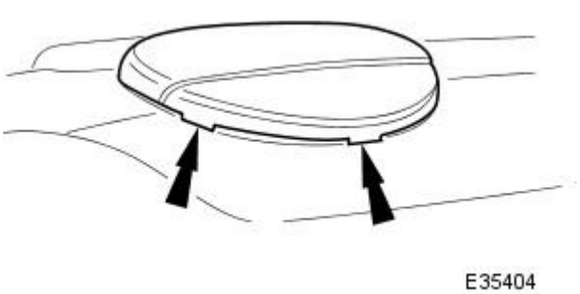

4. Lower front edge of speaker cover and engage side and front clips in parcel shelf.

5. Return seat back to upright position.

Speakers - Subwoofer Speaker Grille

Removal and Installation

Removal

E35404

1. Move front seat back to fully forward position.
2. Carefully lift front edge of speaker cover to release front and side clips from rear parcel shelf.

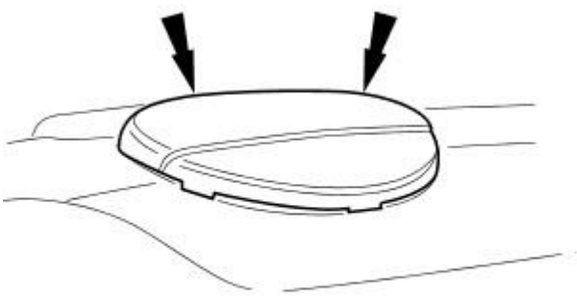

E35405

3. Move speaker cover forward to release rear clips from parcel shelf.
4. Remove cover from speaker.

Installation

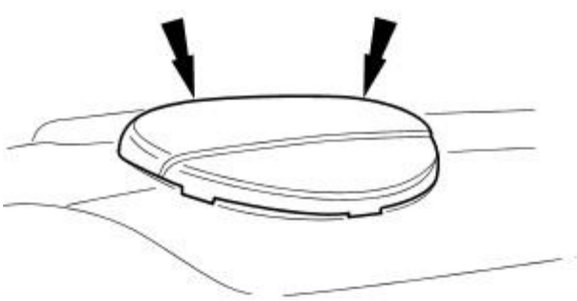

E35405

1. Position speaker cover on parcel shelf and engage rear clips in slots.

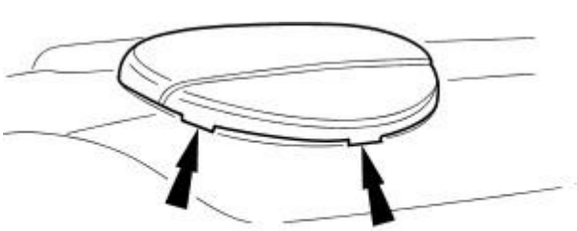

E35404

2. Lower front edge of speaker cover and engage side and front clips in parcel shelf.
3. Return seat back to upright position.

Exterior Lighting -

Bulbs

Description	Capacity	Type
Front turn signal lamp bulb	12V 21W	PY 21W Bayonet Amber Long Life
Front side/parking lamp bulb	12V 5W	W5W Capless Long Life
Front fog lamp bulb	12V 55W	Halogen H1 Long Life
Low beam headlamp bulb - non High Intensity Discharge (HID)	12V 55W	Halogen H1 Long Life
Low beam headlamp bulb - High Intensity Discharge (HID)	12V 35W	D1s35W
High beam headlamp bulb - non High Intensity Discharge (HID)	12V 60W	Halogen HB3
High beam headlamp bulb - High Intensity Discharge (HID)	12V 60W	Halogen HB3A
Side repeater lamp bulb	12V 5W	W5W Capless Long Life
Rear turn signal lamp bulb	12V 21W	PY21W Bayonet Amber Long Life
Rear side Lamp bulb	12V 5W	P5W Bayonet Long Life
Stop lamp bulb	12V 21W	P21W Bayonet Long Life
Reversing lamp bulb	12V 21W	P21W Bayonet Long Life
Rear fog lamp bulb	12V 21W	P21W Bayonet Long Life
License plate lamp bulb	12V 5W	W5W Capless Long Life

Component	Nm	Lb-Ft	Lb-In
Headlamp assembly upper retaining bolt	-	4	44
Headlamp assembly inboard retaining nut	-	5	62
Headlamp assembly lower retaining bolt	-	5	62
Headlamp leveling sensor	-	1	18
Headlamp leveling sensor to suspension link.	-	3	35
Front fog lamp assembly	-	1	18
Rear lamp assembly	-	2	27

Headlamp Alignment	Setting
Non Federal markets	- 1%
Federal markets	- 0.7% Viewed on the left (VOL)

Exterior Lighting - Exterior Lighting

Description and Operation

Front Lamps

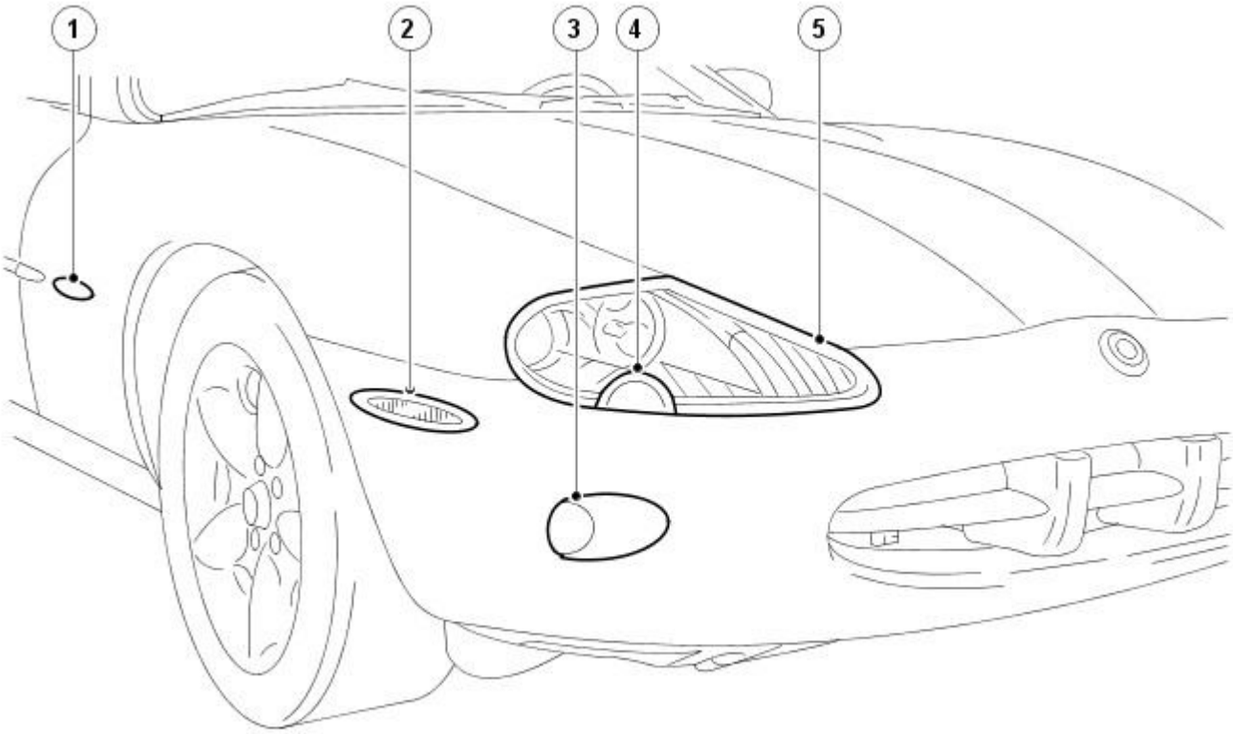

E39225

Item	Part Number	Description
1	—	Side turn signal lamp
2	—	Front side marker lamp/reflector
3	—	Front fog lamp
4	—	Headlamp washer jet
5	—	Headlamp assembly

The headlamp assembly incorporates a high beam lamp, a low beam lamp, a front turn signal lamp, a side lamp, a headlamp washer jet and a headlamp leveling motor. Vehicles with high intensity discharge (HID) headlamp also incorporate a ballast and leveling module. Access for bulb replacement is from the engine compartment except for the dipped beam bulb, which is accessible through a panel in the wheelarch liner.

The fog lamps are located in the front bumper and retained by three screws. Access for bulb replacement is through the opening panel in the wheelarch liner. The lamps are not interchangeable, because of the orientation of the fixing holes and shape of the glass.

The front side marker lamps (if equipped) incorporate a reflector and are retained by a spring clip at each end of the lamp unit. In markets where they are not specified, a reflector is fitted.

The side turn signal lamps (if equipped) are retained by a spring clip at each end of the lamp unit.

The headlamps are operated by the left-hand steering column multifunction switch. The steering column multifunction switch also operates the side lamps, high beam lamps, auto mode and the turn signal lamps.

Rear Lamps

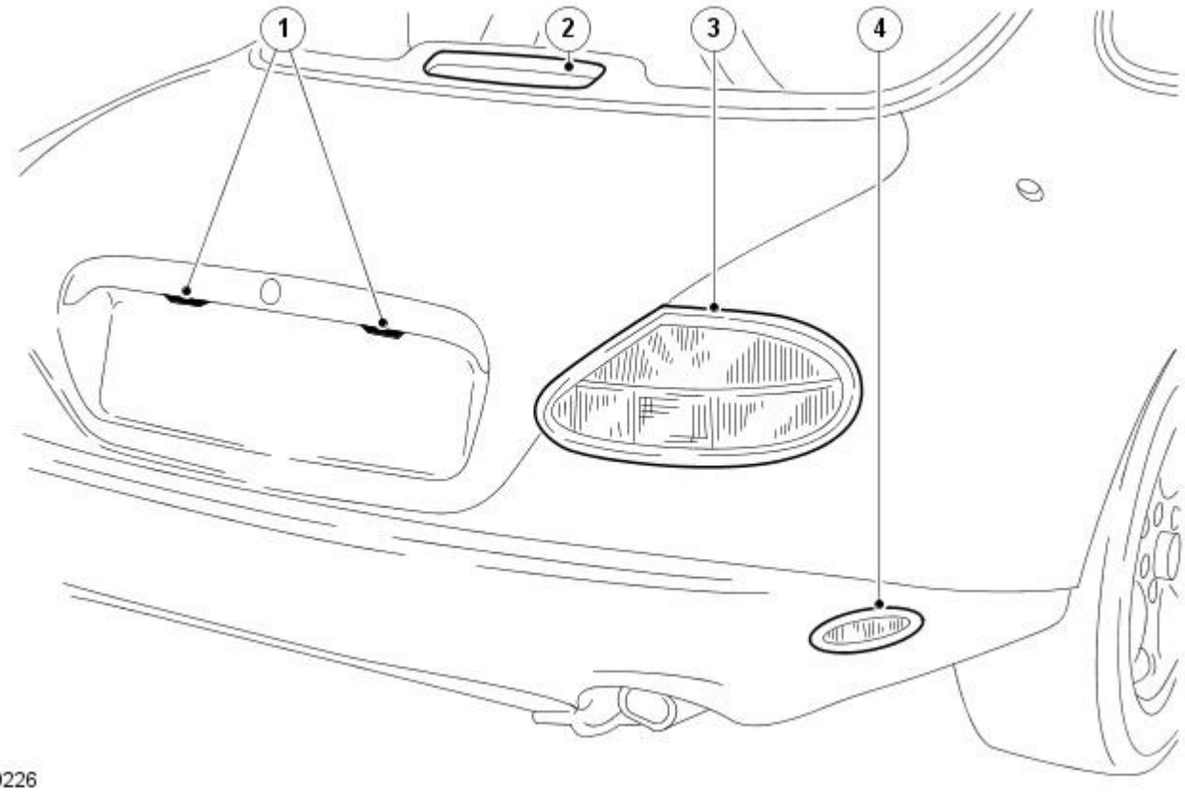

E39226

Item	Part Number	Description
1	—	License Plate Lamps
2	—	High Mounted Stop Lamp
3	—	Rear Lamp Assembly
4	—	Rear side marker lamp/reflector

The rear side marker lamps (where fitted) incorporate a reflector and are secured by a spring clip at each end of the lamp unit. In markets where they are not specified, a reflector is fitted.

Each rear lamp assembly incorporates a stop lamp, a side lamp, a fog lamp, a reversing lamp and a turn signal lamp. Access for bulb replacement is from the luggage compartment.

The license plate lamps are located on a trim finisher panel, secured to the luggage compartment lid by four nuts. Each bulb is accessible after removing the relevant lens by releasing the retaining tang.

A High Mounted Stop Lamp (if equipped) is fitted inside the rear screen on coupe models (as shown above) and externally, on the luggage compartment lid, on convertible models. These lamps operates using sixteen LEDs instead of conventional bulbs. Individual LEDs cannot be replaced; the complete lamp unit must be renewed if one LED is inoperative.

High Intensity Discharge (HID) Lamps

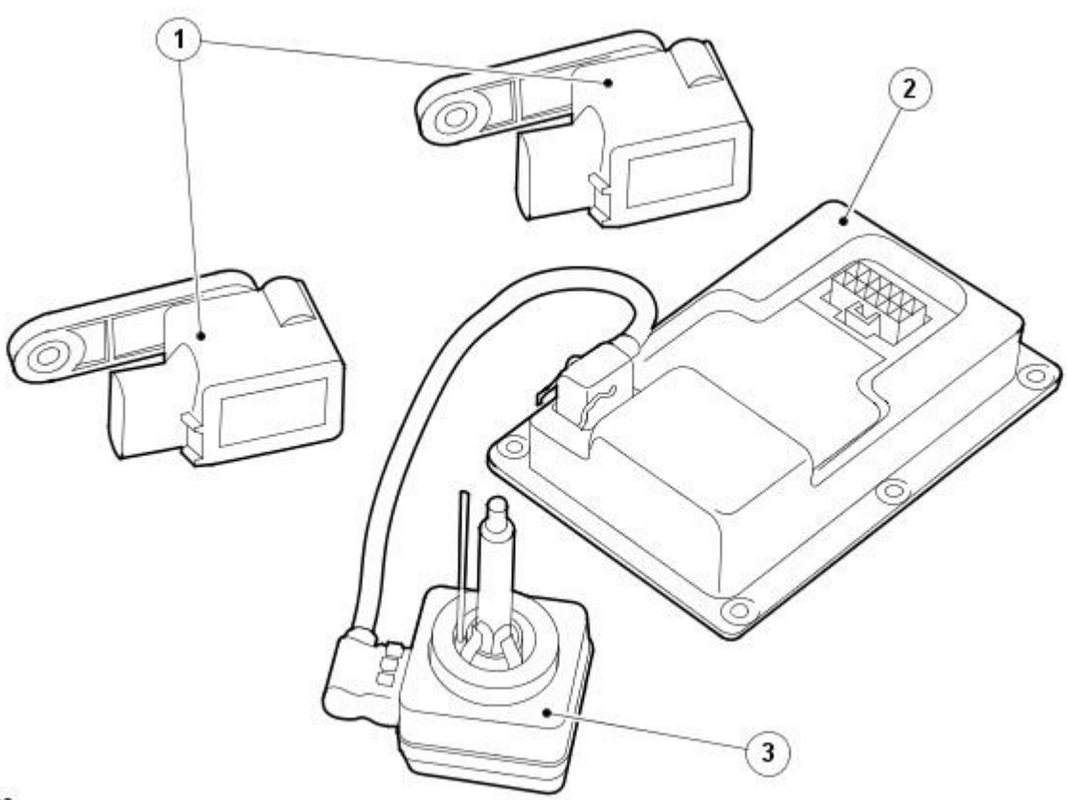

E39236

Item	Part Number	Description
1	—	Headlamp leveling sensor
2	—	Ballast and headlamp leveling module
3	—	Low beam headlamp bulb

The ballast has an integrated automatic levelling module which receives electrical inputs from the vehicle height sensors and outputs a signal to the levelling motor, as well generating a 1 kv voltage to the HID light source. A single wire bus is used to transmit the signals from the two vehicle height sensors. The high luminous flux provided by the HID system significantly improves long distance visibility. The increased beam width and consistency of the beam also provides better illumination of the side of the road. While HID bulbs last considerably longer than halogen bulbs, there are several characteristics that indicate that a bulb is approaching the end of its service life. These symptoms are characterized by low light output and/or intermittent illumination. Visual signs include blackening at the ends of the arc tube and electrode tip deterioration.

• NOTE: If a headlamp leveling sensor, a ballast leveling module, or a headlamp are to be renewed, the system must initialized. For additional information, refer to the Jaguar Approved Diagnostic System.

The HID bulbs contain metals, including mercury, that are harmful to the environment. Dispose of used HID bulbs whilst complying to local health and safety standards.

Exterior Lighting - Exterior Lighting

Diagnosis and Testing

Tests Using the Portable Diagnostic Unit

Refer to PDU User Guide

The complexity of the electronics involved with the various Electronic Control Modules and the two multiplexed communication networks, preclude the use of workshop general electrical test equipment. Therefore, reference should be made to the PDU User Guide for detailed instructions on testing the exterior lamps and circuits.

The PDU systematically tests and analyses the lamp assemblies, the bulbs and the electrical connections to them. It should be noted that the lamps are not wired directly to the switches. Each switch provides a signal to the Body Processor which interprets the signal as a request to switch on a specific lamp.

The Body Processor places the instruction onto the SCP Network. The module which is closest to the specific lamp, for example, the Security and Locking Module will translate the request which is currently on the network and switch on the rear fog lamps (also controls the reverse lamps). The remaining rear lamps and front lamps are controlled directly by the Body Processor (it has a sufficient number of high power output stages to drive the lamps / relays compared to other modules). The door hazard lamps are controlled locally by the relevant Door Module.

Where a fault involving a lamp is indicated by the PDU, some basic diagnostic methods may be necessary to confirm that connections are good and that wiring is not damaged, before replacing the components.

Exterior Lighting - Headlamp AdjustmentVehicles With: High Intensity Discharge Headlamps

General Procedures

1. Start and run the engine.

2. NOTE: The headlamps must be switched **ON** for 30 seconds before carrying out this procedure to allow the headlamp bulb to warm up.

Switch on the low beam.

3. Prepare the vehicle for headlamp adjustment.

- Place the vehicle on a level surface.
- Before adjusting the headlamps, check them for faulty lenses, reflectors and blackened bulbs, and install new components as necessary.
- Make sure that the tires are inflated to the correct pressure. For additional information, refer to Section 204-04 Wheels and Tires.
- The vehicle must be at normal unladen weight.
- Normalize the suspension.

4. Adjust the headlamps.

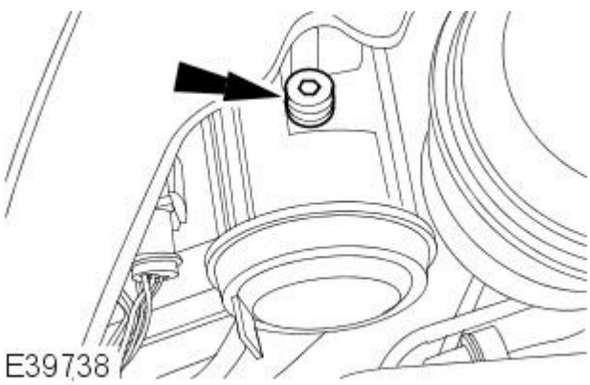

Exterior Lighting - Headlamp AdjustmentVehicles Without: High Intensity Discharge Headlamps

General Procedures

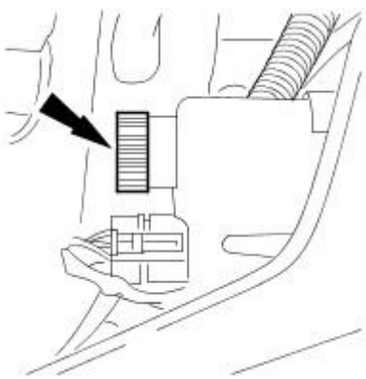

1. Prepare the vehicle for headlamp adjustment.

- Place the vehicle on a level surface.
- Before adjusting the headlamps, check them for faulty lenses, reflectors and blackened bulbs, and install new components as necessary.
- Make sure that the tires are inflated to the correct pressure. For additional information, refer to Section 204-04 Wheels and Tires.
- The vehicle must be at normal unladen weight.
- Normalize the suspension.

2. Switch on the low beam.

3. Position the headlamp leveling switch to **0**

4. Adjust the headlamps.

Exterior Lighting - BallastVehicles With: High Intensity Discharge Headlamps

Removal and Installation

Removal

1. Remove the headlamp assembly.
   For additional information, refer to Headlamp Assembly - in this section.
2. Remove the ballast retaining screws.

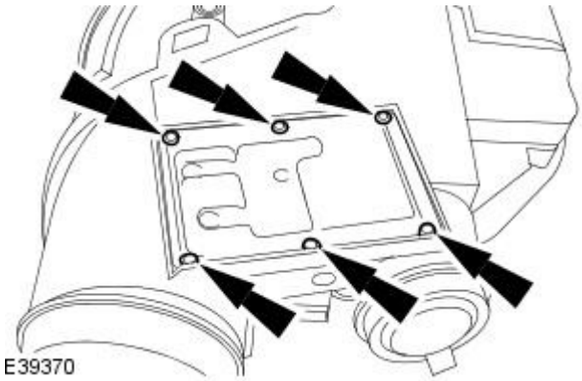

3. Disconnect the low beam headlamp electrical connector.

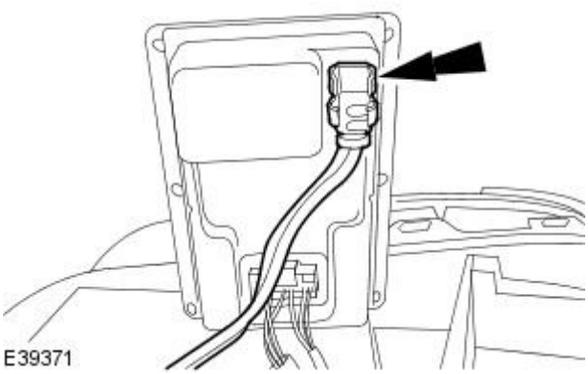

4. Remove the ballast.
   - Disconnect the ballast electrical connector.

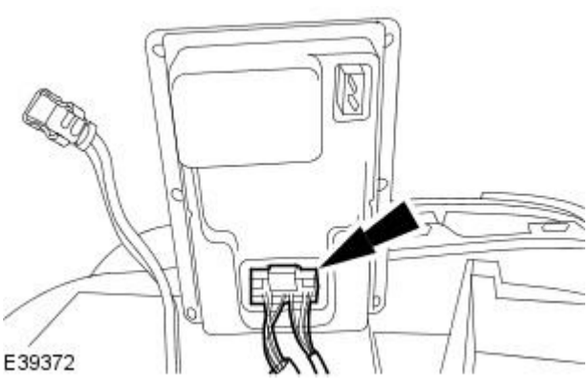

Installation

1. NOTE: Make sure that the ballast gasket is correctly installed.

   To install, reverse the removal procedure.

Exterior Lighting - Brake Pedal Position (BPP) Switch

Removal and Installation

Removal

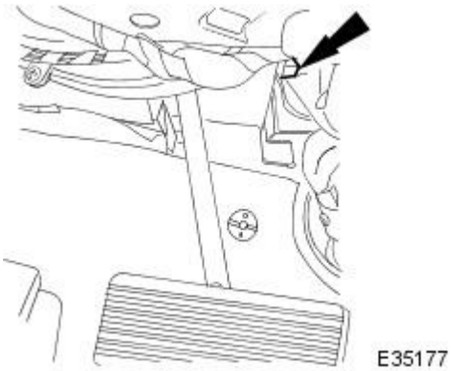

1. Disconnect the brake pedal position (BPP) switch electrical connector.

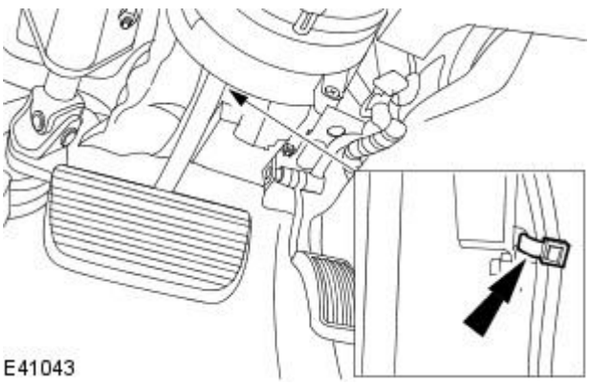

2. Remove and discard the BPP switch wiring harness retaining strap.

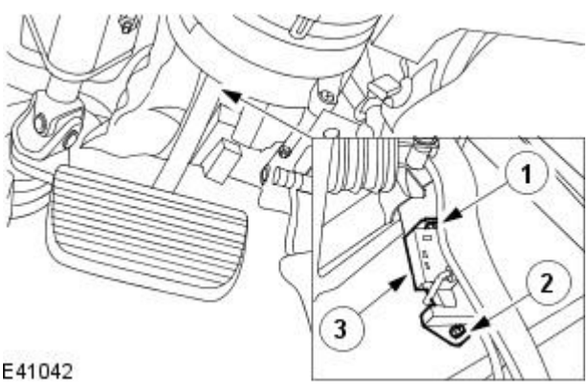

3. Remove the BPP switch.

1. Loosen the upper retaining nut.
2. Remove the lower retaining nut.
3. Remove the BPP switch.

Installation

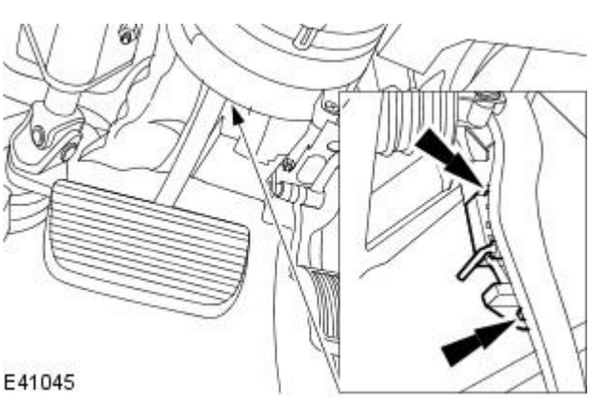

1. Press and hold down the brake pedal.

2. CAUTION: Make sure the brake pedal is held clear of the BPP switch ratchet mechanism during installation. Failure to follow this instruction may result in incorrect adjustment of the BPP switch.

Install the BPP switch.

3. Release the brake pedal.

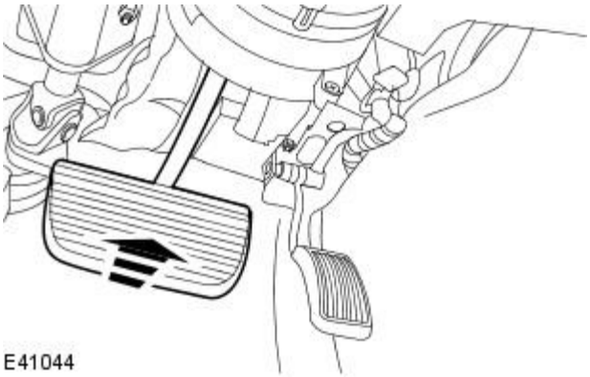

4. CAUTION: Make sure the brake pedal is fully raised. Failure to follow this instruction may result in incorrect adjustment of the BPP switch.

Fully raise the brake pedal.

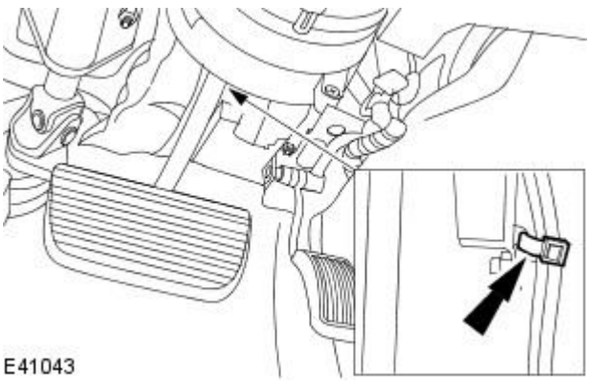

5. Install a new BPP switch wiring harness retaining strap.

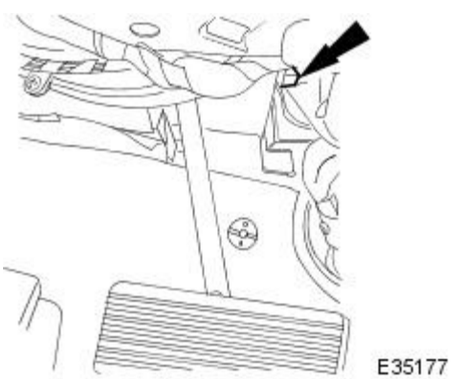

6. Connect the BPP switch electrical connector.

Exterior Lighting - Fog Lamp Switch

Removal and Installation

Removal

1. Remove the floor console.
   For additional information, refer to Section 501-12 Instrument Panel and Console.
2. Detach and reposition the instrument panel console.

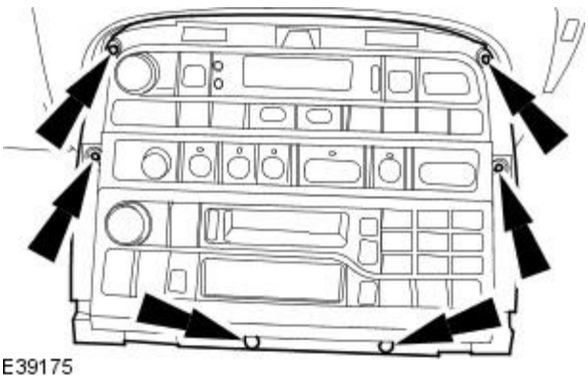

E39175

3. Remove the fog lamp switch.
   - Disconnect the fog lamp electrical connector.

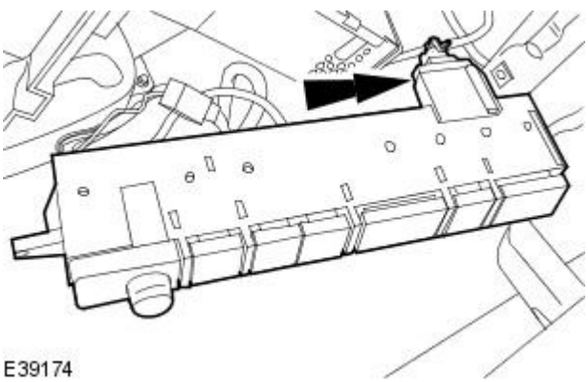

E39174

Installation

1. To install, reverse the removal procedure.

Exterior Lighting - Front Fog Lamp

Removal and Installation

Removal

1. Remove the radiator splash shield.
   For additional information, refer to Section 501-02 Front End Body Panels.
2. Disconnect the front fog lamp electrical connector.

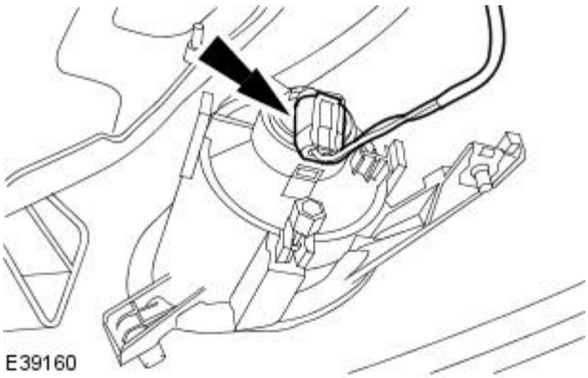

3. Remove the front fog lamp.

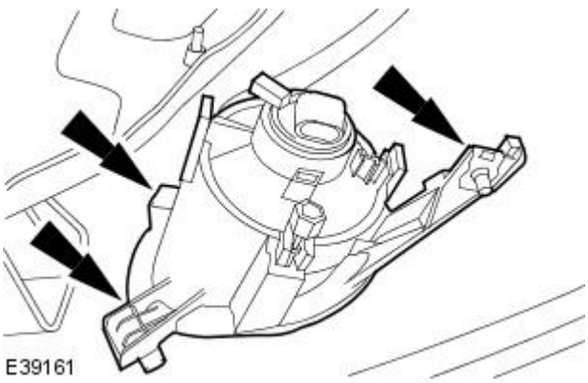

Installation

• NOTE: Vertical alignment is pre-set. No attempt should be made to alter this setting.

1. Installation is the reverse of removal.
   - Tighten to 2 Nm

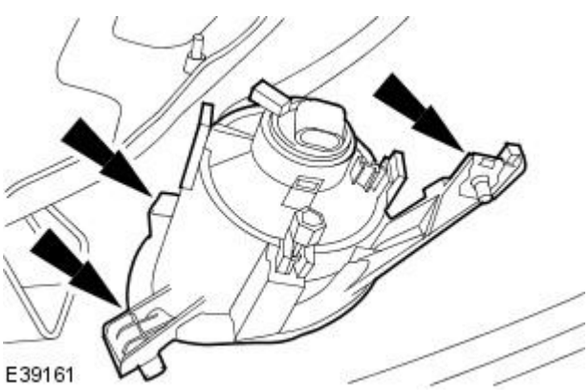

Exterior Lighting - Front Fog Lamp Bulb

Removal and Installation

Removal

1. Turn the steering to full lock, as follows:

- Right- hand fog lamp - Left-hand lock.
- Left- hand fog lamp - Right-hand lock. (Access is possible around the reservoir)

2. Remove the access panel from the wheel arch liner.

1. Release the center fastener which secures the wheel arch liner access panel.
2. Lift the lower retaining catch and disconnect the lower edge of the access panel from the wheel arch liner.
3. Remove the access panel.

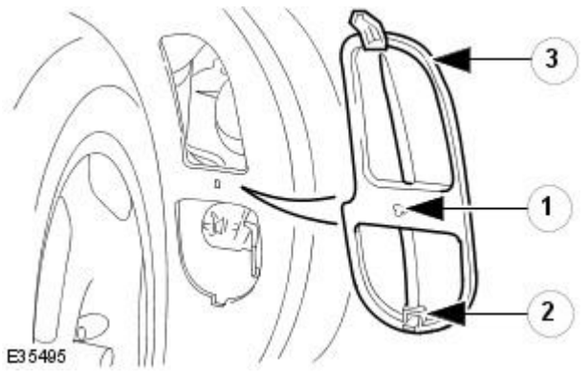

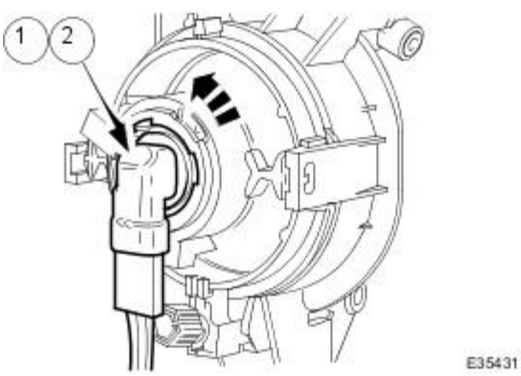

3. CAUTION: The bulb will be damaged if touched by bare hands or contaminated with oil or grease. It is important to use clean gloves or cloth when handling a bulb. A contaminated bulb may be cleaned with methylated spirit before fitting.

Remove the fog lamp bulb from the vehicle (working through the access panel aperture).

1. Disconnect the bulb holder (quarter-turn) from the lamp.
2. Remove the bulb from the holder.

Installation

1. Installation is the reverse of removal.

- Return steering to straight ahead position.

Exterior Lighting - Front Side Marker Lamp

Removal and Installation

Removal

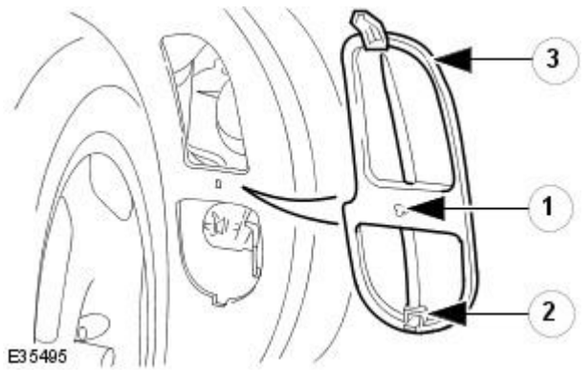

1. Turn the steering to full lock, as follows:

- Right- hand marker - Left-hand lock.
- Left- hand marker - Right-hand lock.

2. Remove the access panel from the wheel arch liner.

1. Release the center fastener which secures the wheel arch liner access panel.
2. Lift the lower retaining catch and disconnect the lower edge of the access panel from the wheel arch liner.
3. Remove the access panel.

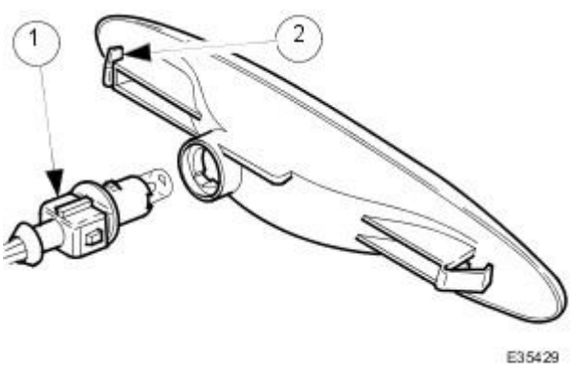

3. Remove the marker lamp.

1. Disconnect the connector from the rear of the lamp.
2. Compress one of the retaining spring clips and remove the lamp.

Installation

1. Installation is the reverse of removal.

- Return steering to straight ahead position.

Exterior Lighting - Front Side Marker Lamp Bulb

Removal and Installation

Removal

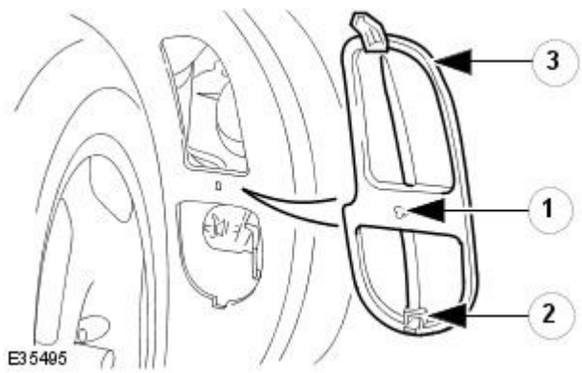

1. Turn the steering to full lock, as follows:

- Right- hand marker - Left-hand lock.
- Left- hand marker - Right-hand lock.

2. Remove the access panel from wheel arch liner.

1. Release the center fastener which secures the wheel arch liner access panel.
2. Lift the lower retaining catch and disconnect the lower edge of the access panel from the wheel arch liner.
3. Remove the access panel.

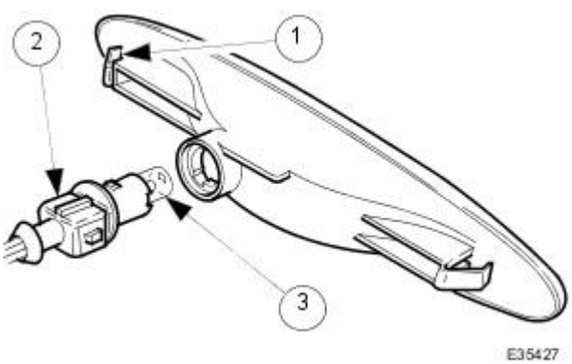

3. Remove the marker lamp.

1. Working through the wheel arch liner access panel, compress one of the retaining spring clips and remove the lamp.
2. Disconnect bulb holder from rear of the lamp.
3. Remove the bulb from the bulb holder.

Installation

1. Installation is the reverse of removal.

- Return steering to straight ahead position.

Exterior Lighting - Front Turn Signal Lamp Bulb

Removal and Installation

Removal

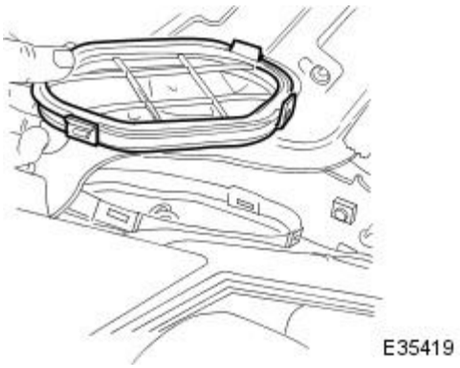

1. Open hood and install front fender cover.
2. Release headlamp access panel inner retaining tangs and remove panel.

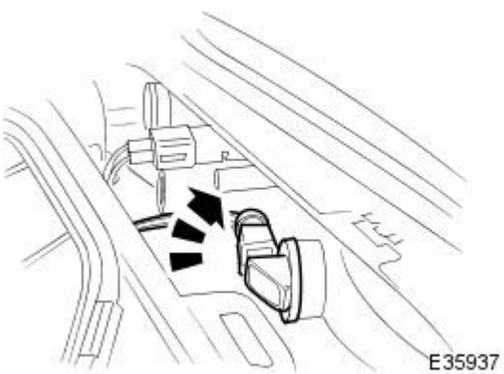

3. Rotate direction indicator lamp bulb holder 1/4 turn clockwise to release it from headlamp assembly.
4. Rotate bulb 1/4 turn to release and remove bulb from holder.

Installation

1. Install direction indicator lamp bulb in bulb holder and rotate 1/4 turn to fully engage.
2. Install bulb holder to headlamp and rotate 1/4 turn counterclockwise to seat and fully engage.
3. Reposition water shedder.
4. Install headlamp access panel ensuring that seal is in position and retaining tangs are correctly engaged.

Exterior Lighting - Headlamp Assembly

Removal and Installation

Removal

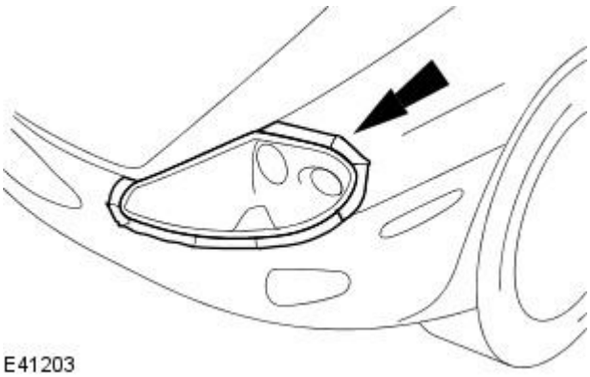

1. CAUTION: Failure to follow this instructions may result in damage to the paintwork.

Install suitable protective tape.

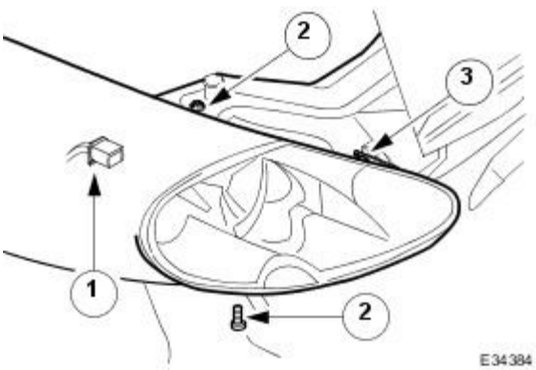

2. Detach the headlamp assembly.

1. Disconnect the headlamp assembly electrical connector.
2. Remove the headlamp assembly retaining bolts.
3. Detach the headlamp assembly.

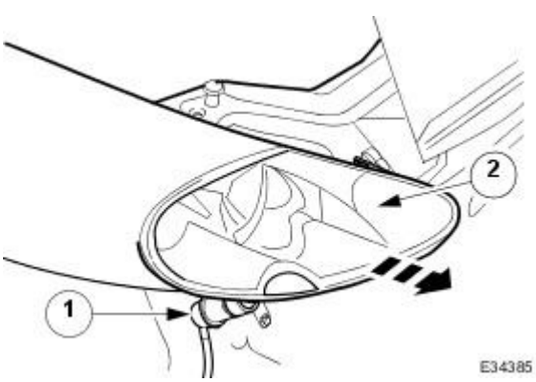

3. Remove the headlamp assembly.

1. Disconnect the headlamp washer jet.
2. Remove the headlamp assembly.

Installation

1. To install, reverse the removal procedure.

2. Adjust the headlamp.
For additional information, refer to Headlamp Adjustment - Vehicles With: High Intensity Discharge Headlamps in this section.

3. Adjust the headlamp.
For additional information, refer to Headlamp Adjustment - Vehicles Without: High Intensity Discharge Headlamps in this section.

Exterior Lighting - Headlamp Lens

Removal and Installation

Removal

1. Remove headlamp assembly for access. Refer to 86.41.33.
2. Release lens to headlamp assembly upper retaining tangs.

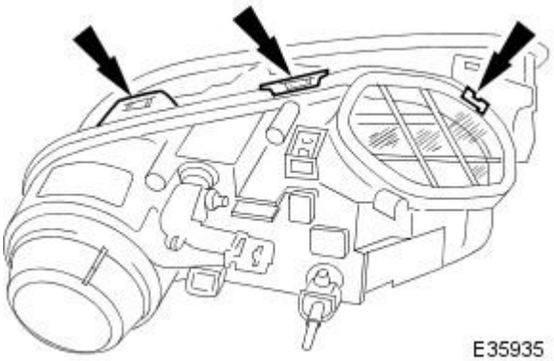

3. Release lens to headlamp assembly lower and side retaining tangs and remove lens from assembly

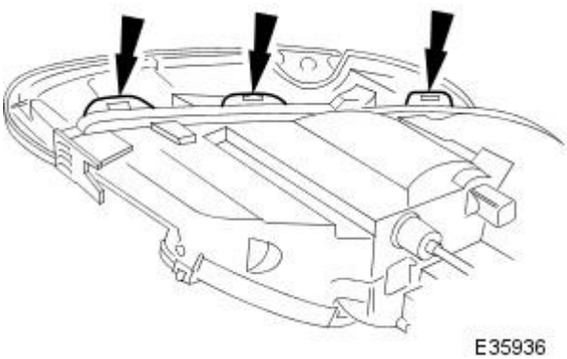

4. Rotate direction indicator bulb holder 1/4 turn clockwise and remove from headlamp lens.

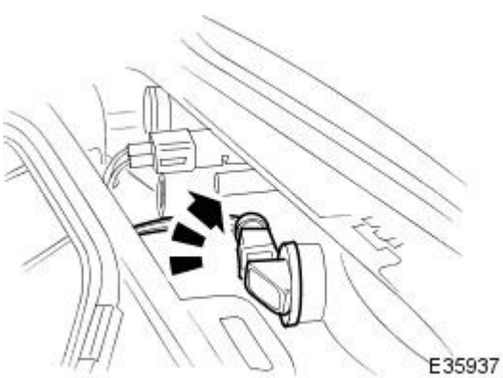

5. Rotate parking/side lamp bulb holder 1/4 turn counter-clockwise and remove from headlamp lens.

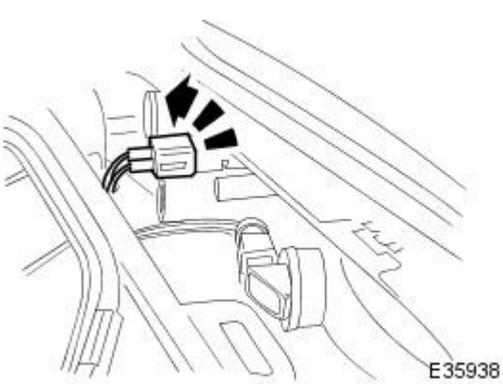

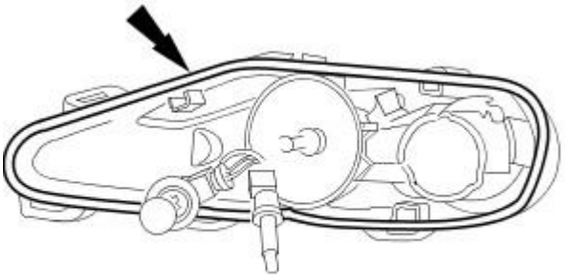

E35939

6. Remove and discard headlamp lens to headlamp assembly seal.

Installation

1. Install new lens seal to headlamp assembly.
2. Position lens on headlamp.
3. Install parking/side lamp bulb holder to headlamp lens.
4. Install direction indicator lamp bulb holder to headlamp lens.
5. Install lens to headlamp assembly ensuring that retaining tangs are correctly engaged.
6. Install headlamp assembly on vehicle. Refer to 86.41.33.
7. Carry out headlamp beam alignment check and adjust as necessary.

Published: 11-May-2011

Exterior Lighting - Headlamp Leveling Module

Removal and Installation

Removal

1. NOTE: The procedure for the headlamp leveling module is the same as the procedure for the ballast as both units are incorporated in to the same module.

Remove the ballast.
For additional information, refer to: Ballast - Vehicles With: High Intensity Discharge Headlamps (417-01 Exterior Lighting, Removal and Installation).

Installation

1. NOTE: The procedure for the headlamp leveling module is the same as the procedure for the ballast as both units are incorporated in to the same module.

Install the ballast.
For additional information, refer to: Ballast - Vehicles With: High Intensity Discharge Headlamps (417-01 Exterior Lighting, Removal and Installation).

Published: 11-May-2011

Exterior Lighting - Headlamp Leveling Motor LHVehicles Without: High Intensity Discharge Headlamps

Removal and Installation

Removal

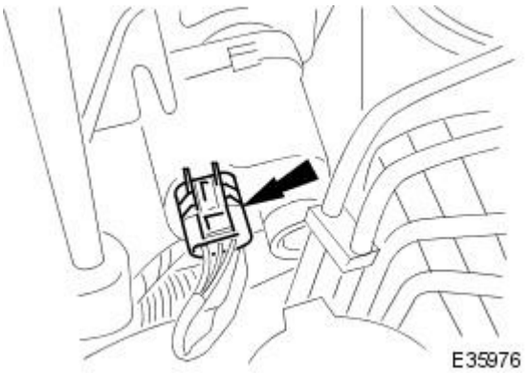

1. Disconnect the headlamp leveling motor electrical connector.

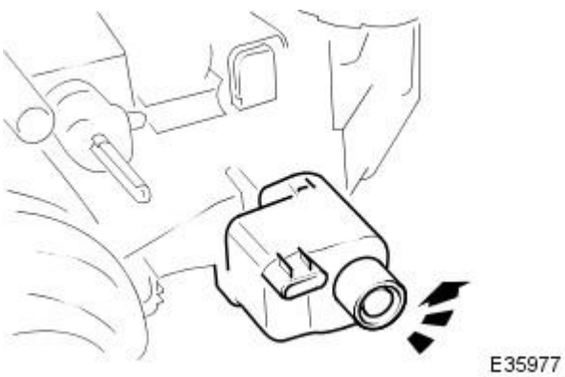

2. Remove the headlamp leveling motor.

Installation

1. To install, reverse the removal procedure.
2. Adjust the headlamp.
   For additional information, refer to Headlamp Adjustment - Vehicles Without: High Intensity Discharge Headlamps in this section.

Exterior Lighting - Headlamp Leveling Motor LHVehicles With: High Intensity Discharge Headlamps

Removal and Installation

Removal

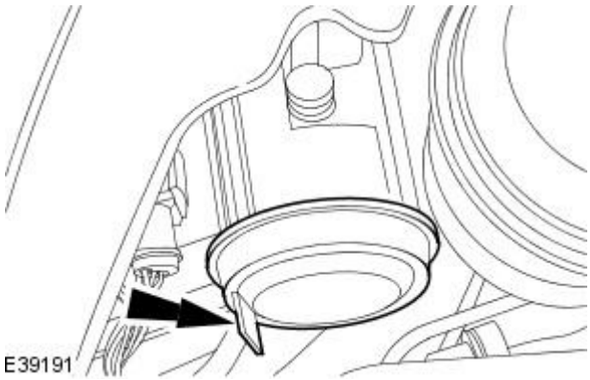

1. Remove the headlamp leveling motor cover.

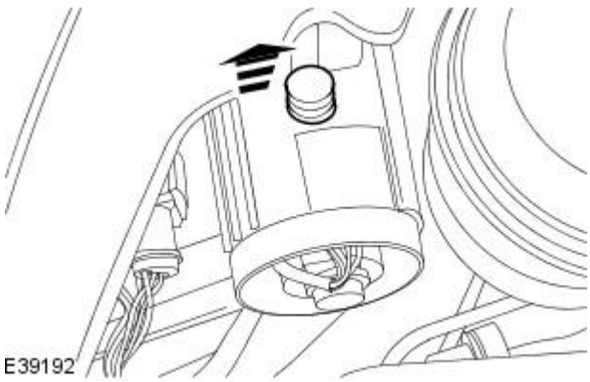

2. Raise the headlamp leveling motor adjustment screw.

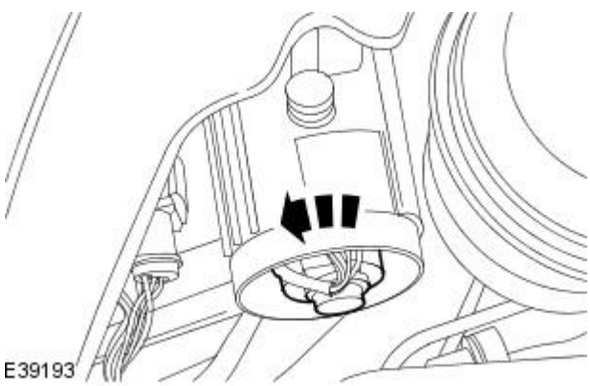

3. Detach the headlamp leveling motor.

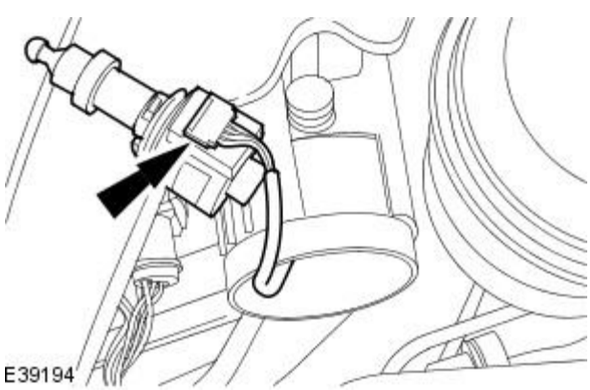

4. Remove the headlamp leveling motor.

- Disconnect the headlamp leveling motor electrical connector.

Installation

1. To install, reverse the removal procedure.

2. Adjust the headlamp.
For additional information, refer to Headlamp Adjustment - Vehicles With: High Intensity Discharge Headlamps in this section.

Exterior Lighting - Headlamp Leveling Motor RHVehicles Without: High Intensity Discharge Headlamps

Removal and Installation

Removal

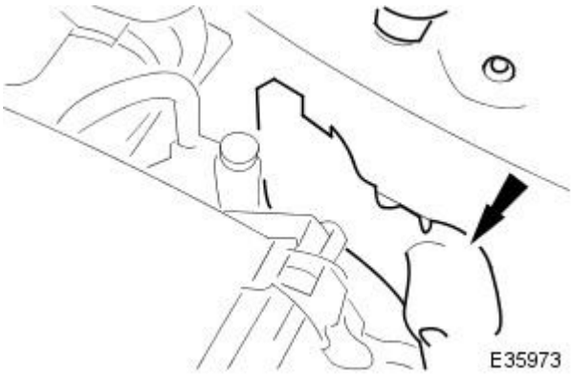

1. Remove headlamp rear trim cover panel.

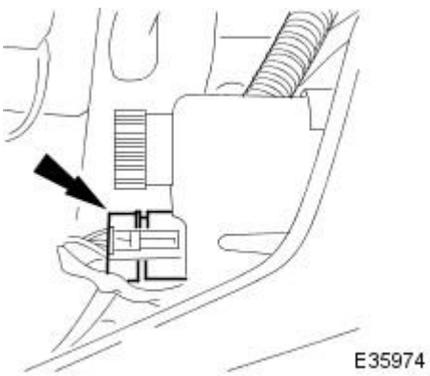

2. Disconnect the headlamp leveling motor electrical connector.

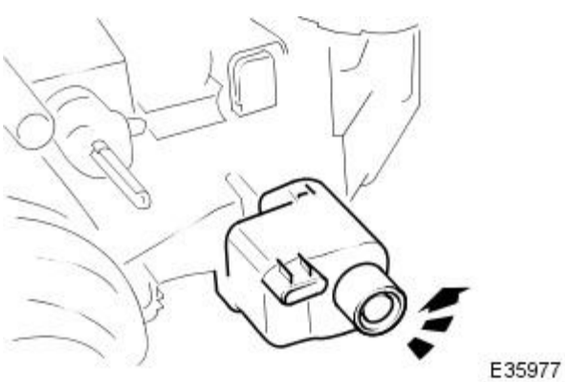

3. NOTE: Left-hand shown, right-hand similar.

Remove the headlamp leveling motor.

Installation

1. To install, reverse the removal procedure.

2. Adjust the headlamp.
For additional information, refer to Headlamp Adjustment - Vehicles Without: High Intensity Discharge Headlamps in this section.

Exterior Lighting - Headlamp Leveling Motor RHVehicles With: High Intensity Discharge Headlamps

Removal and Installation

Removal

1. Remove the air cleaner.
   For additional information, refer to Section 303-12 Intake Air Distribution and Filtering.
2. Remove the headlamp leveling motor cover.

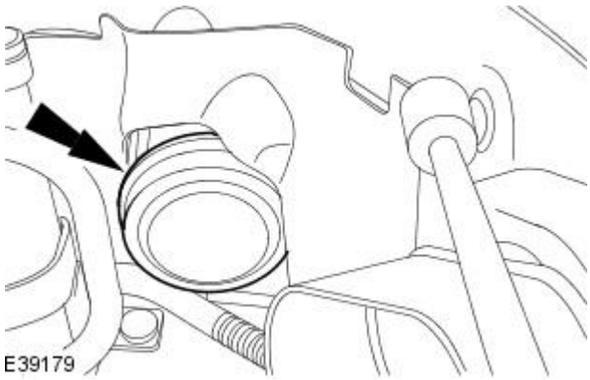

3. Remove the headlamp assembly trim panel.

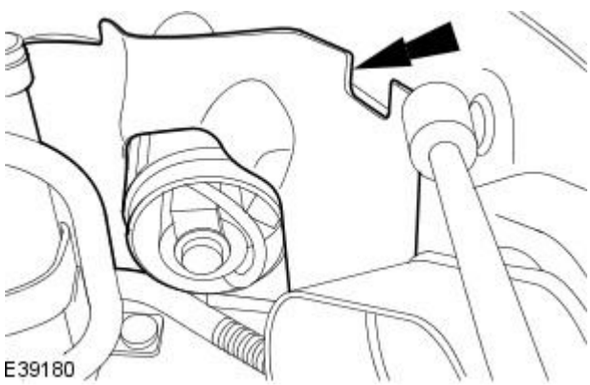

4. Raise the headlamp leveling motor adjustment screw.

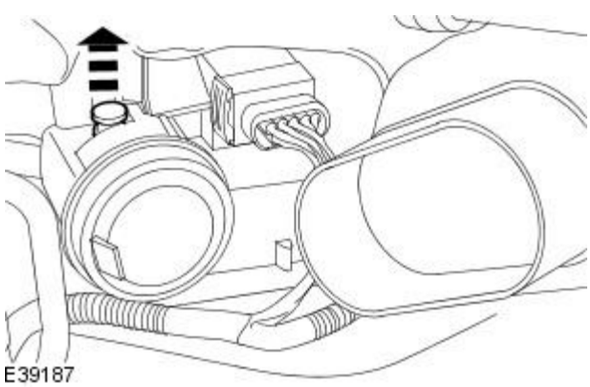

5. Detach the headlamp leveling motor.

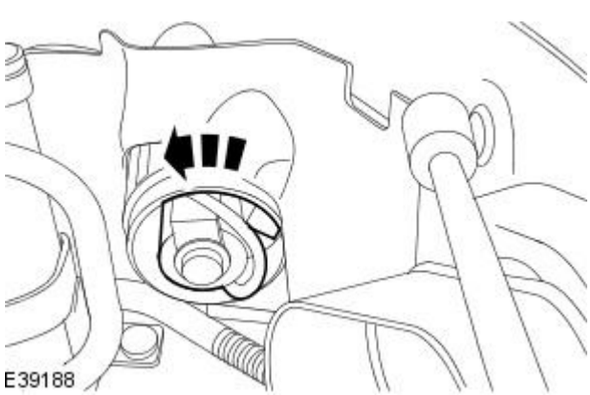

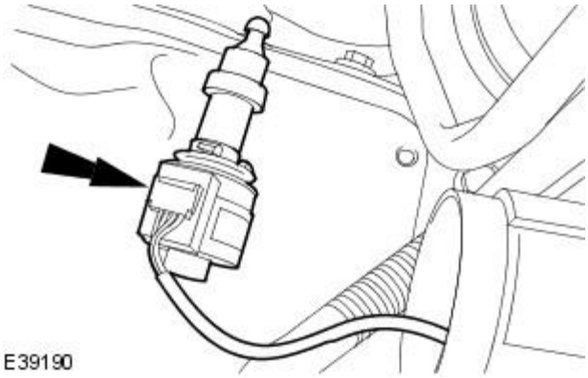

6. Remove the headlamp leveling motor.
   - Disconnect the electrical connector.

Installation

1. To install, reverse the removal procedure.
2. Adjust the headlamp.
   For additional information, refer to Headlamp Adjustment - Vehicles With: High Intensity Discharge Headlamps in this section.

Published: 11-May-2011

Exterior Lighting - Headlamp Leveling SensorVehicles With: High Intensity Discharge Headlamps

Removal and Installation

Removal

• NOTE: The procedure shown is for the headlamp leveling front sensor, the procedure is similar for the headlamp leveling rear sensor.

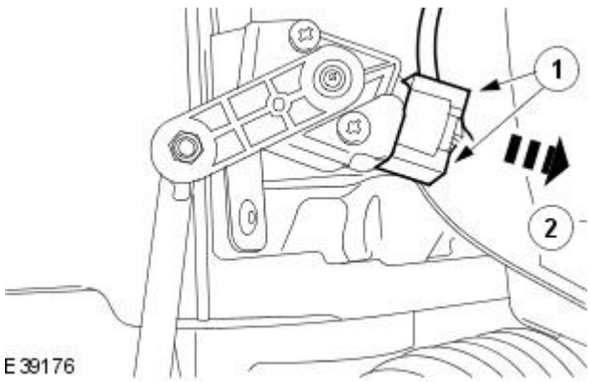

1. Remove the front wheel and tire assembly.
For additional information, refer to Section 204-04 Wheels and Tires.

2. Disconnect the headlamp leveling sensor electrical connector.

1. Press the headlamp leveling sensor electrical connector retaining tangs.
2. Disconnect the headlamp leveling sensor electrical connector.

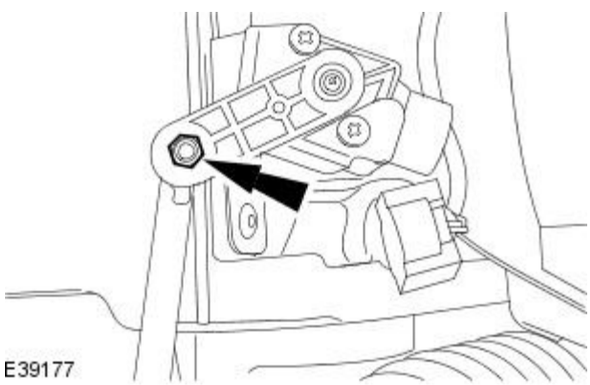

3. Detach the headlamp leveling sensor pivot securing nut.

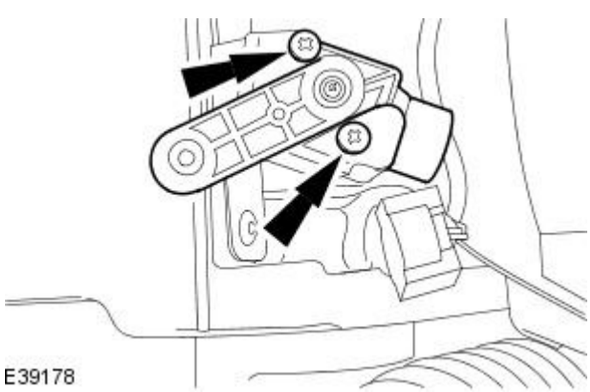

4. Remove the headlamp leveling sensor.

Installation

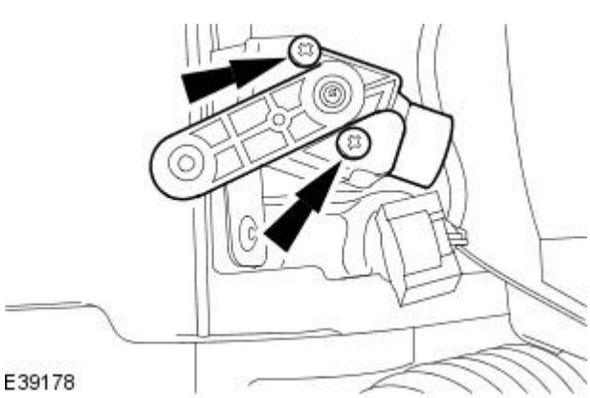

1. To install, reverse the removal procedure.

- Tighten to 2 Nm.

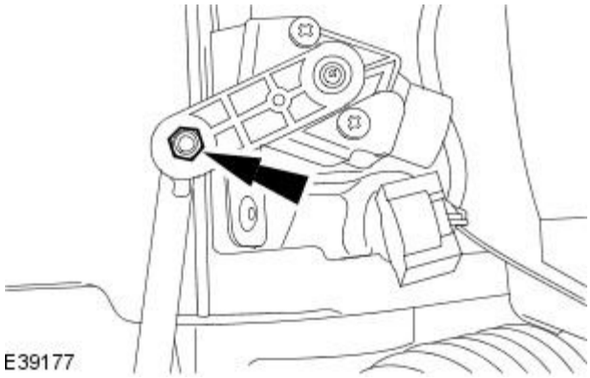

2. Tighten to 4 Nm.

Exterior Lighting - High Beam Headlamp Bulb

Removal and Installation

Removal

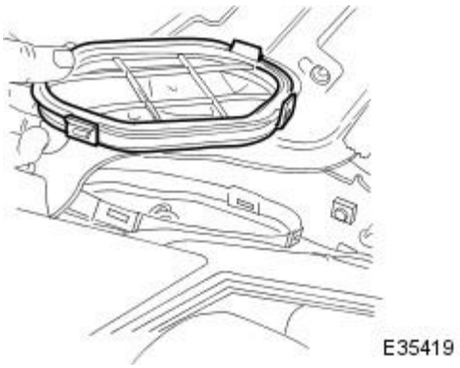

1. Open the engine compartment cover.

2. Remove the access cap from the closing panel.

- Squeeze the lower two clips to release the cap.

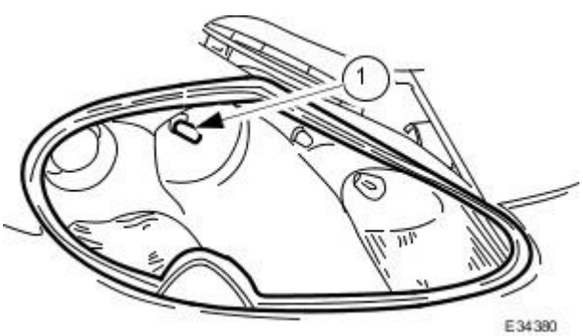

3. CAUTION: The bulb will be damaged if touched by bare hands or contaminated with oil or grease. It is important to use clean gloves or cloth when handling a bulb. A contaminated bulb may be cleaned with methylated spirit before fitting.

Remove the main beam bulb / bulb holder assembly from the vehicle (working through the access cap aperture).

1. Rotate the bulb holder anti-clockwise by approximately a quarter-turn to release it from the lamp.

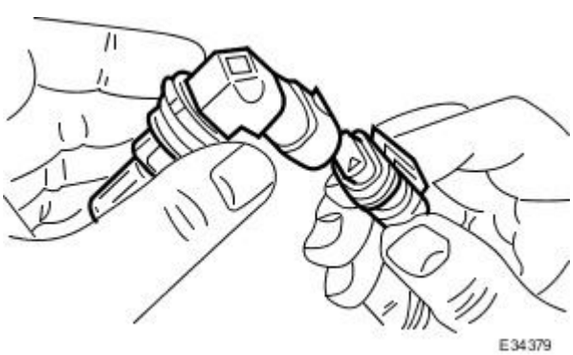

4. Remove the bulb / bulb holder assembly from the vehicle harness.

Installation

1. Installation is the reverse of removal.

- Check that the new bulb is orientated correctly and that the locating lugs are aligned.
- Check that the seal is in place before fitting the access cap to the closing panel.

Exterior Lighting - High Mounted Stoplamp2-Door

Removal and Installation

Removal

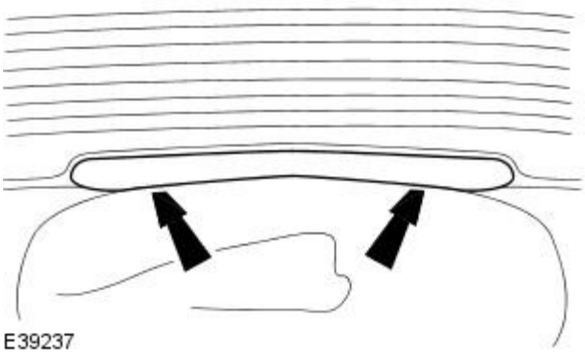

1. Remove the high mounted stoplamp trim panel.

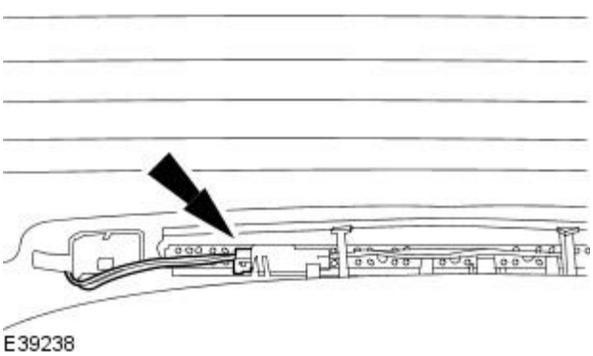

2. Detach and disconnect the high mounted stoplamp electrical connector.

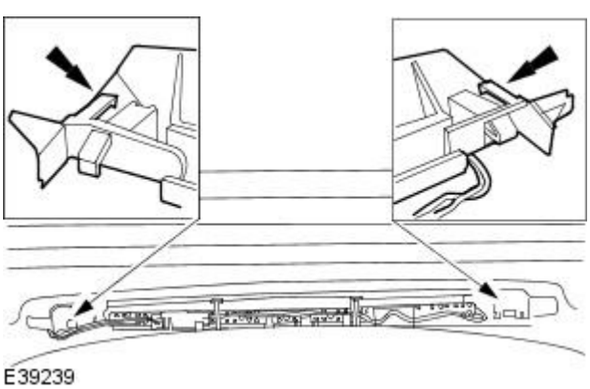

3. CAUTION: Make sure the high mounted stoplamp retaining tangs are not damaged during removal. Failure to follow this instruction may result in damage to the vehicle.

Remove the high mounted stoplamp.

- Using a suitable tool, release the retaining tangs.

Installation

1. To install, reverse the removal procedure.

Exterior Lighting - High Mounted StoplampConvertible

Removal and Installation

Removal

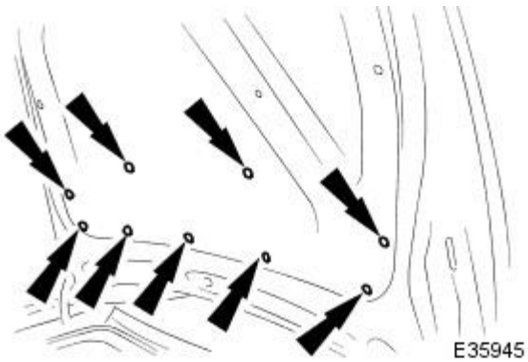

1. With trunk lid fully open, remove and discard fasteners securing liner to forward edge of lid.

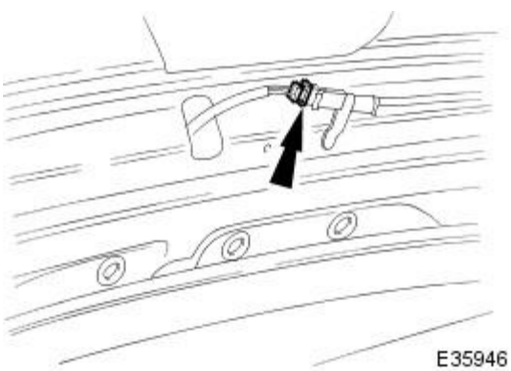

2. Disconnect stop lamp to trunk lid harness multiplug.

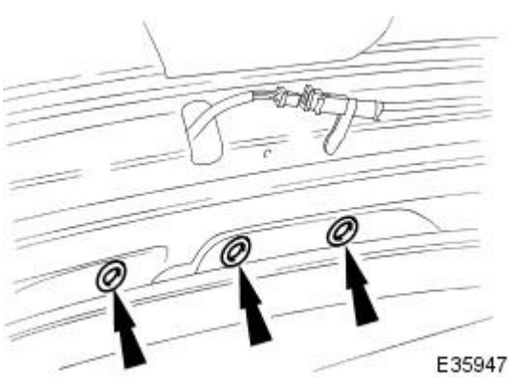

3. Remove the three blanking plugs from forward underside of trunk lid.

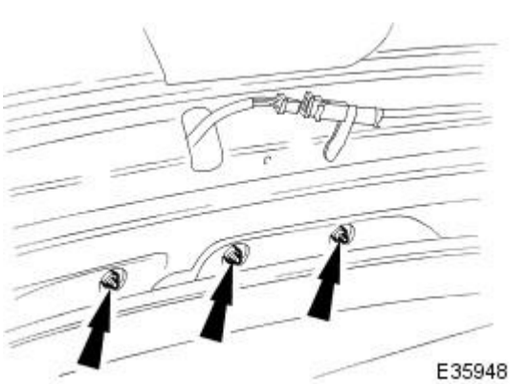

4. Remove three nuts securing stop lamp to trunk lid.

5. Routing harness through aperture, remove stop lamp from trunk lid.

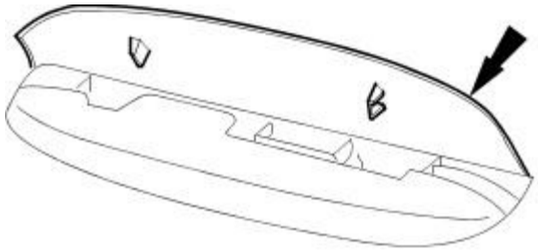

E35949

6. Release retaining tangs and remove top cover from stop lamp.

Installation

1. Install top cover on stop lamp ensuring retaining tangs are fully seated.
2. Routing harness through aperture, position stop lamp assembly on trunk lid.
3. Install stop lamp to trunk lid securing nuts.
4. Install blanking plugs to underside of trunk lid.
5. Connect stop lamp multiplug to trunk lid harness.
6. Using new fasteners, secure forward edge of liner to trunk lid.
7. Close trunk lid.

Exterior Lighting - License Plate Lamp

Removal and Installation

Removal

Vehicles with convertible top

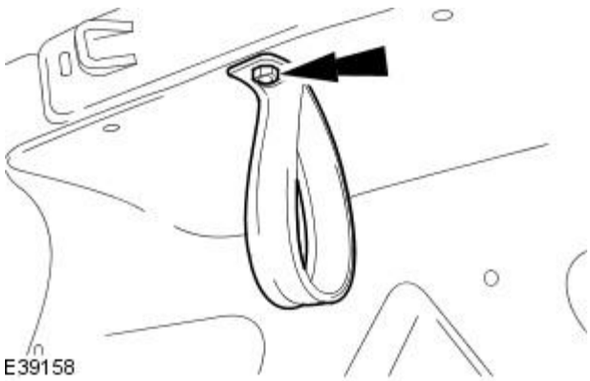

1. Remove the luggage compartment lid closing handle.

All vehicles

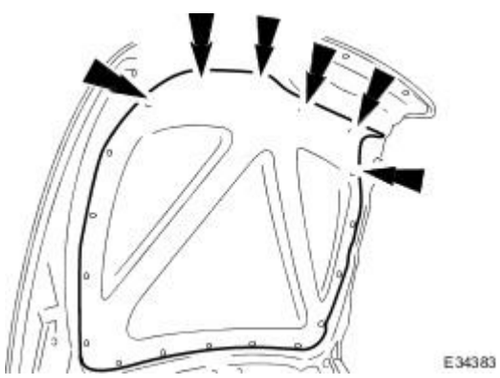

2. Detach the luggage compartment lid trim panel.

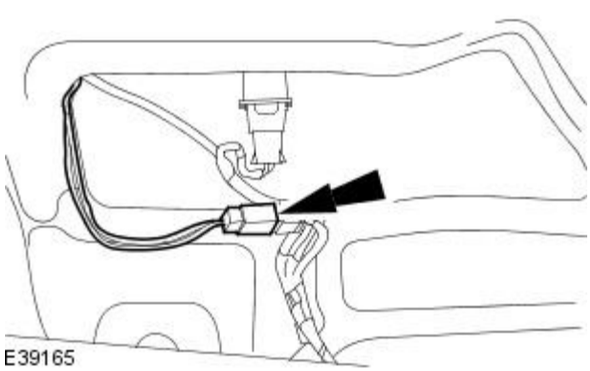

3. Disconnect the luggage compartment lid release switch electrical connector.

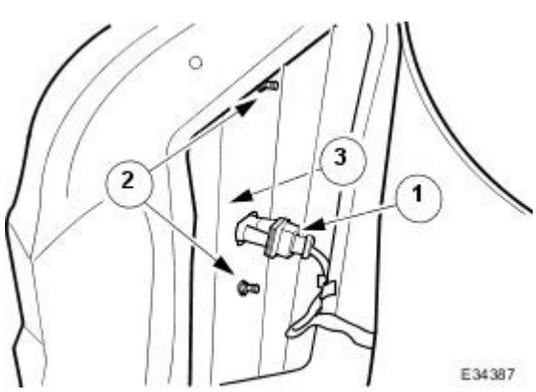

4. Detach the license plate lamp.

1. Disconnect the license plate lamp electrical connectors.
2. Remove the license plate lamp assembly retaining nuts.
3. Detach the license plate lamp.

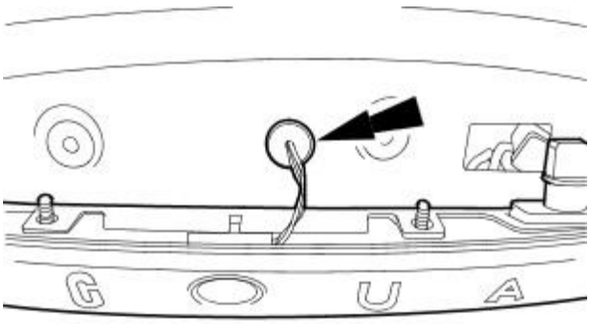

E39164

5. Remove the license plate lamp.

- Detach the license plate lamp wiring harness insulator.

Installation

1. To install, reverse the removal procedure.

Exterior Lighting - License Plate Lamp Bulb

Removal and Installation

Removal

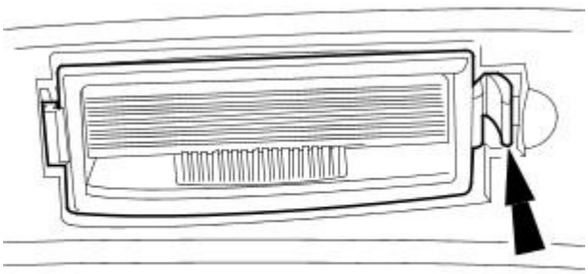

E39163

1. Remove the license plate lamp bulb lens.
   - Release the retaining tang.

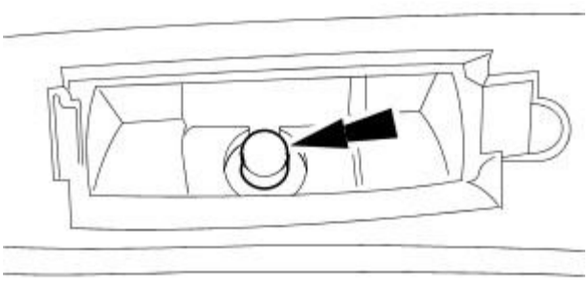

E39162

2. Remove the license plate lamp bulb.

Installation

1. To install, reverse the removal procedure.

Exterior Lighting - Low Beam Headlamp BulbVehicles Without: High Intensity Discharge Headlamps

Removal and Installation

Removal

1. Turn the steering to full lock, as follows:

- Right- hand fog lamp - Left-hand lock.
- Left- hand fog lamp - Right-hand lock.

2. Remove the access panel from the wheel arch liner.

1. Release the center fastener which secures the wheel arch liner access panel.
2. Lift the lower retaining catch and disconnect the lower edge of the access panel from the wheel arch liner.
3. Remove the access panel.

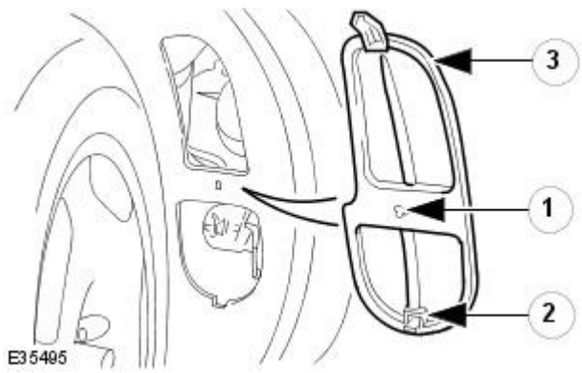

3. Remove the protection cap from the rear of the lamp.

1. Release the spring clip and remove the bulb and harness plug from the lamp assembly.

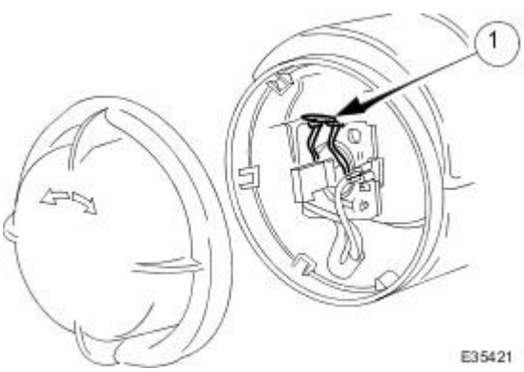

4. CAUTION: The bulb will be damaged if touched by bare hands or contaminated with oil or grease. It is important to use clean gloves or cloth when handling a bulb. A contaminated bulb may be cleaned with methylated spirit before fitting.

Remove the bulb from the harness plug (working through the access panel aperture).

1. Remove the bulb from the harness plug.

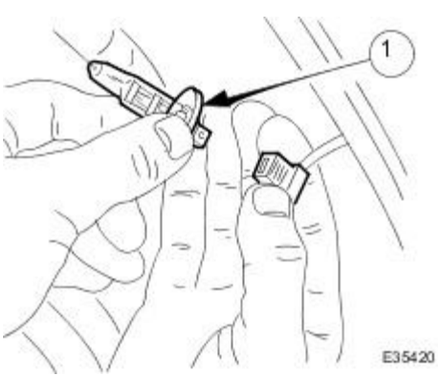

Installation

1. Installation is the reverse of removal.

- Return steering to straight ahead position.

Exterior Lighting - Low Beam Headlamp BulbVehicles With: High Intensity Discharge Headlamps

Removal and Installation

Removal

• WARNINGS:

Make sure the headlamps are in the **OFF** position, voltages of up to 25 kv are possible with HID lighting.

Always wear safety glasses and protective gloves when removing and installing the low beam headlamp bulb. Failure to follow these instructions may result in personal injury.

CAUTION: Do not touch the glass surface of the low beam headlamp bulb. Failure to follow these instructions may result in damage to the vehicle.

1. Remove the bulb access panel.
For additional information, refer to Section 501-12 Instrument Panel and Console.

2. Remove the low beam headlamp bulb cover.

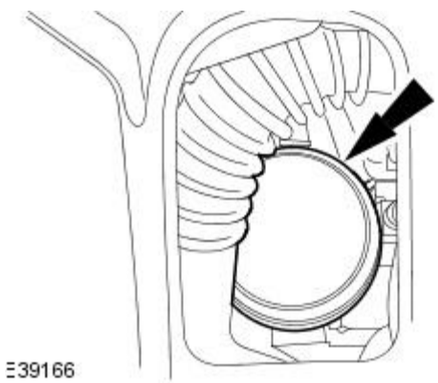

3. Disconnect the low beam headlamp bulb electrical connector.

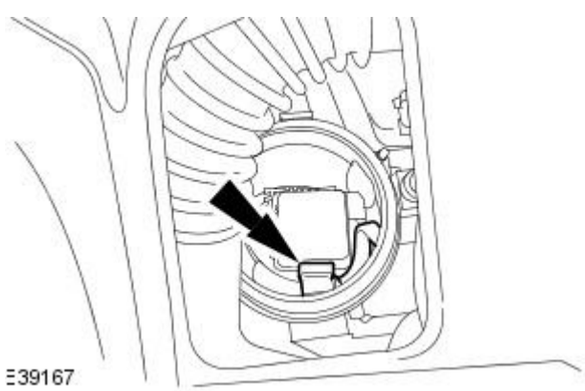

4. Remove the low beam headlamp bulb.

- Release the retaining clip.

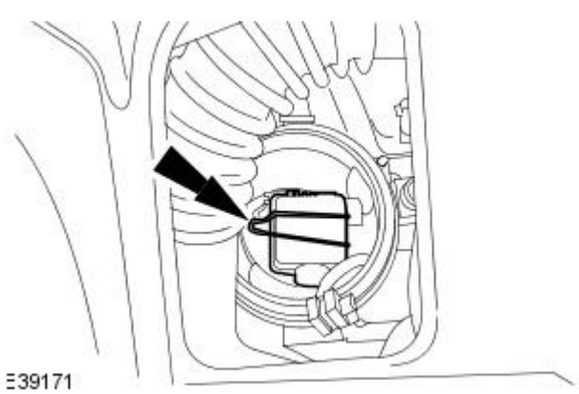

Installation

1. To install, reverse the removal procedure.

Exterior Lighting - Rear Lamp Assembly

Removal and Installation

Removal

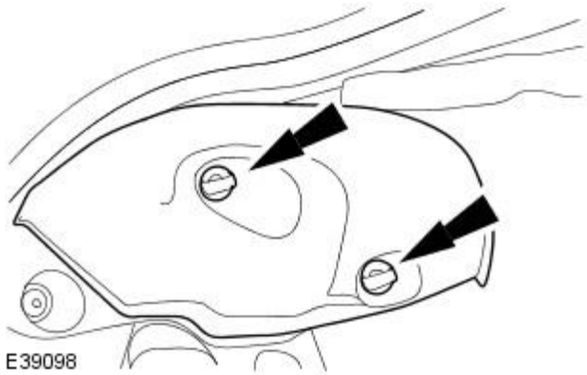

1. Remove the rear lamp assembly trim panel.

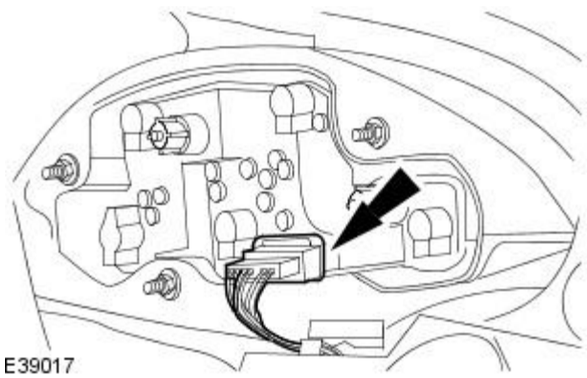

2. Disconnect the rear lamp assembly electrical connector.

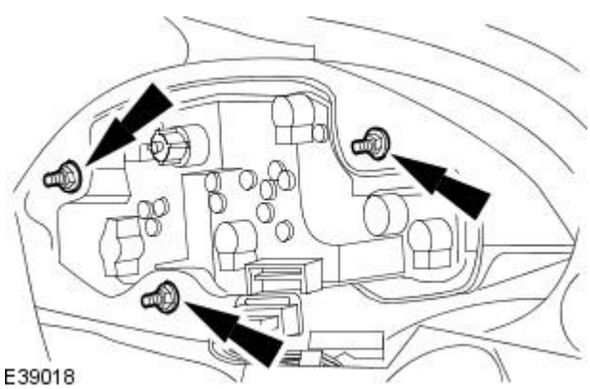

3. Remove the rear lamp assembly.

Installation

1. To install, reverse the removal procedure.

Exterior Lighting - Rear Lamp Assembly Bulb

Removal and Installation

Removal

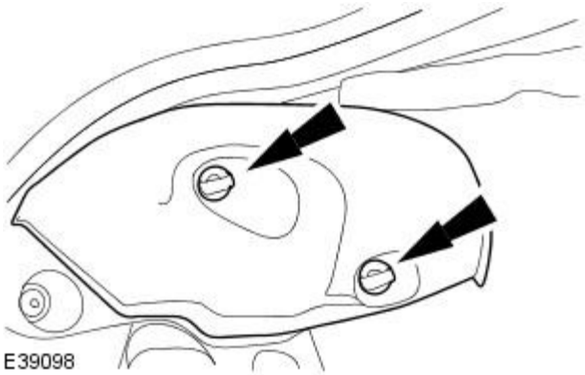

1. Remove the rear lamp assembly trim panel.

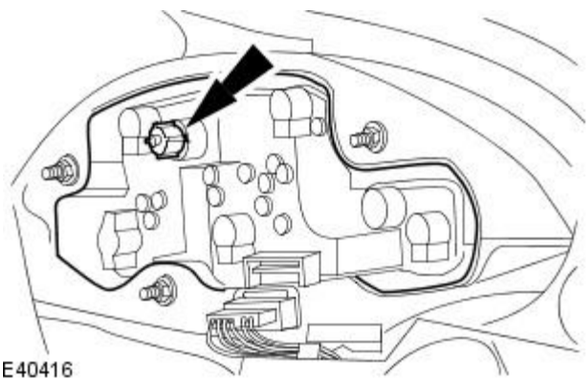

2. Detach the rear lamp assembly bulb housing.

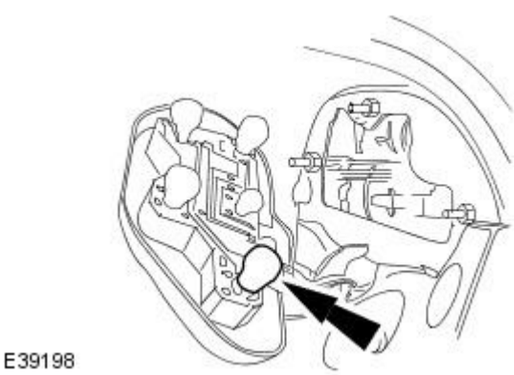

3. Remove the rear lamp assembly bulb.

Installation

1. To install, reverse the removal procedure.

Exterior Lighting - Rear Side Marker Lamp

Removal and Installation

Removal

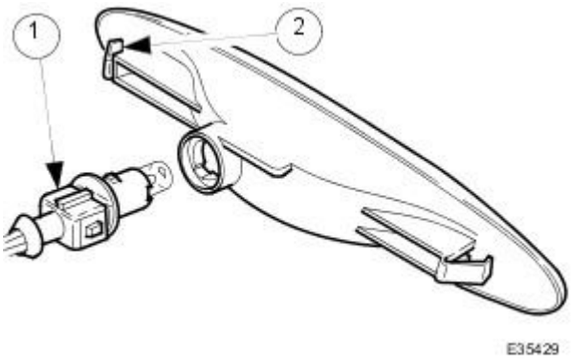

1. Remove the marker lamp.

1. Working from the underside of the bumper, disconnect the connector from the rear of the lamp.
2. Compress one of the retaining spring clips and carefully remove the lamp.

Installation

1. Installation is the reverse of removal.

Exterior Lighting - Rear Side Marker Lamp Bulb

Removal and Installation

Removal

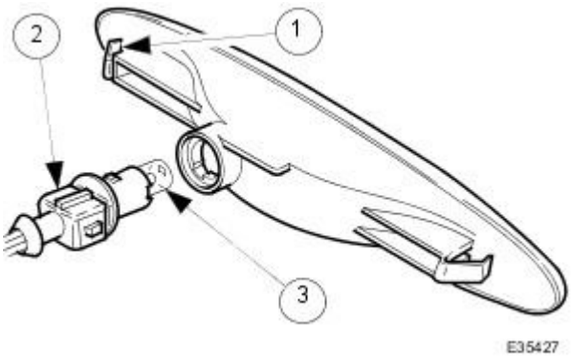

1. Remove the marker lamp.

1. Working from the underside of the bumper, compress one of the retaining spring clips and carefully remove the lamp.
2. Disconnect the bulb holder from the rear of the lamp.
3. Remove the bulb from the bulb holder.

Installation

1. Installation is the reverse of removal.

Exterior Lighting - Side Lamp Bulb

Removal and Installation

Removal

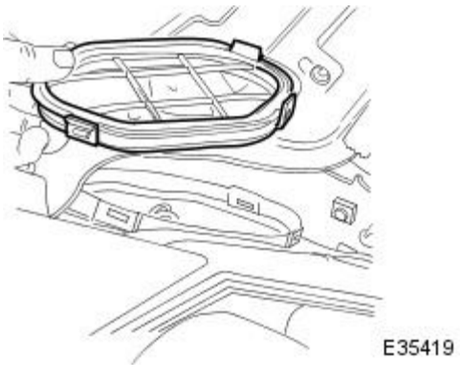

1. Open the engine compartment cover.
2. Remove the access cap from the closing panel.
   - Squeeze the lower two clips to release the cap.

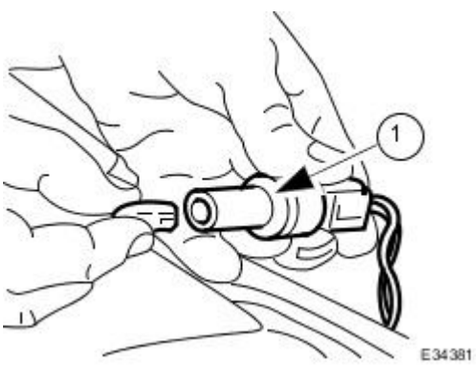

3. Remove the bulb from the vehicle (working through the access cap aperture).
   1. Rotate the bulb holder (quarter-turn) and harness plug to remove the assembly from the lamp.
   - Pull the bulb from the bulb holder assembly.

Installation

1. Installation is the reverse of removal.
   - Check that the seal is in place before fitting the access cap to the closing panel.

Published: 11-May-2011

Exterior Lighting - Side Turn Signal Lamp Bulb

Removal and Installation

Removal

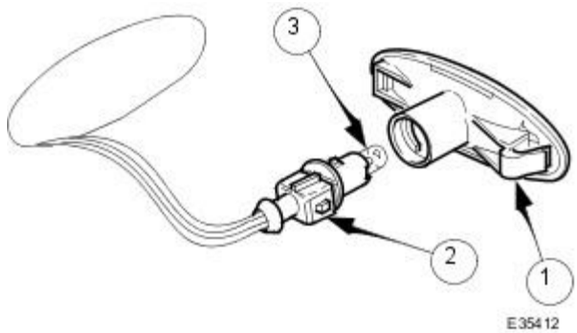

1. Remove the repeater lamp.

1. Carefully slide the lamp forward or rearward to compress one of the retaining spring clips and remove the lamp from the panel.
2. Disconnect the bulb holder from the rear of the lamp.
3. Remove the bulb from the bulb holder.

Installation

1. Installation is the reverse of removal.

Published: 11-May-2011

Exterior Lighting - Side Turn Signal Lamp LH

Removal and Installation

Removal

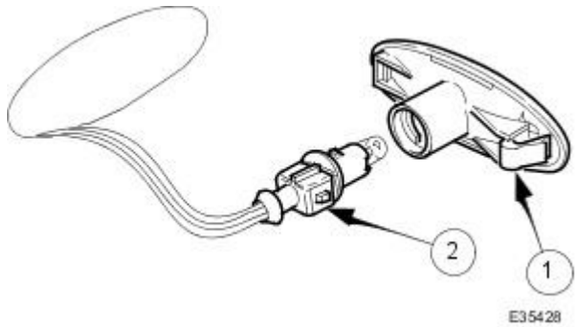

1. Remove the repeater lamp.

1. Carefully slide the lamp forward or rearward to compress one of the retaining spring clips and remove the lamp from the panel.
2. Disconnect the connector from the rear of the lamp.

Installation

1. Installation is the reverse of removal.

Published: 11-May-2011

Exterior Lighting - Side Turn Signal Lamp RH

Removal and Installation

Removal

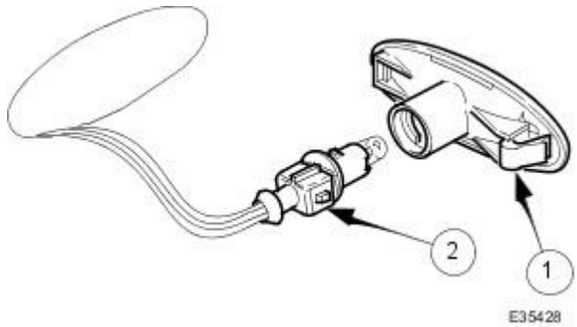

1. Remove the repeater lamp.

1. Carefully slide the lamp forward or rearward to compress one of the retaining spring clips and remove the lamp from the panel.
2. Disconnect the connector from the rear of the lamp.

Installation

1. Installation is the reverse of removal.

Interior Lighting -

Bulbs

Description	Capacity	Type
Door Guard / Puddle Lamps	12V 5W	Capless Long Life
Footwell Lamps	12V 5W	Capless Long Life
Glovebox Lamp	12V 4W	Bayonet Long Life
Luggage Compartment Lamps	12V 5W	Festoon Long Life
Roof Rear Courtesy Lamp - Coupe	12V 5W	Festoon Long Life
Roof Console Map / Courtesy Lamps	12V 6W	Capless
Sun Visor Vanity Mirror Lamps	12V 3W	Festoon

Interior Lighting - Interior Lighting

Description and Operation

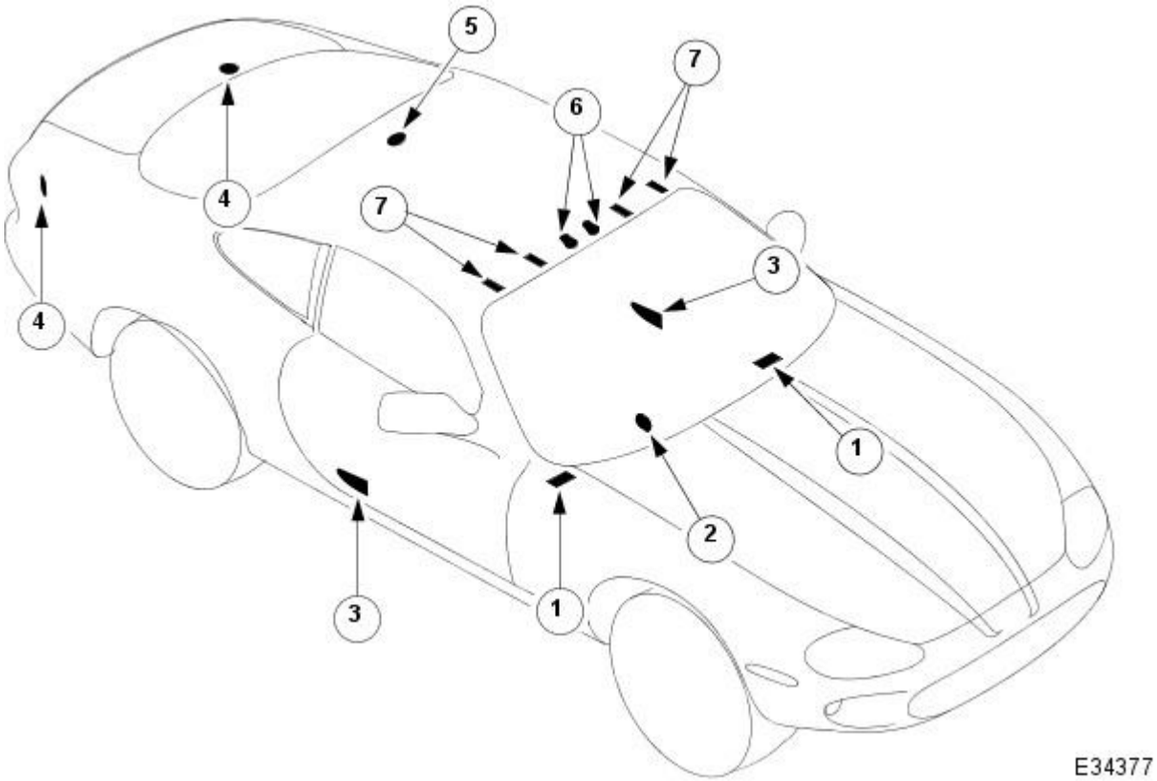

Item	Part Number	Description
1	—	Footwell Lamps
2	—	Glovebox Lamp
3	—	Door Guard / Puddle Lamps
4	—	Luggage Compartment Lamps
5	—	Roof Rear Lamp (Coupe Only)
6	—	Roof Console Map / Courtesy Lamps
7	—	Sun Visor Vanity Mirror Lamps

Two footwell lamps are fitted, one at each end of the fascia lower rail. They are not fitted with manual switches and operate only when either or both doors are opened.

The glovebox lamp operates whenever the glovebox lid is opened. The lamp comprises a combined switch and bulb holder assembly, and a white lens.

A lamp is fitted to the rear lower corner of each door. Each has a double lens; red to project rearwards to warn oncoming traffic that the door is open and white to project down onto the ground. They are not fitted with manual switches and operate only when either or both doors are opened.

A lamp is fitted to each rear corner of the luggage compartment, adjacent to the rear lamp assemblies. They are operated automatically whenever the luggage compartment lid is opened; the switch is incorporated within the latch mechanism.

The roof rear lamp is fitted to the coupe only. It is not fitted with a manual switch and operates only when either or both doors are opened.

The two lamps located in the roof console, function as map reading lamps and as courtesy lamps. Individual switches control each lamp manually and the door switches control the lamps automatically to provide the courtesy lamp function

The vanity mirror lamps, two on each sun visor, operate automatically when the mirror flap is opened. The lamps will operate only when the sun visor spindle is engaged in the stowage clip.

Interior Lighting - Interior Lighting

Diagnosis and Testing

Tests Using the Portable Diagnostic Unit

Refer to PDU User Guide

The complexity of the electronics involved with the various Electronic Control Modules and the two multiplexed communication networks, preclude the use of workshop general electrical test equipment. Therefore, reference should be made to the PDU User Guide for detailed instructions on testing the interior lamps and circuits.

The PDU systematically tests and analyses the lamp assemblies, the bulbs and the electrical connections to them. It should be noted that the lamps are not wired directly to the switches. Each manual switch provides a signal to the Body Processor which interprets the signal as a request to switch on a specific lamp.

The lamps are controlled directly by the Body Processor (it has a sufficient number of high power output stages to drive the lamps / relays compared to other modules) except for the door mounted hazard / puddle lamps.

The door hazard / puddle lamps are controlled locally by the relevant Door Module.

The Body Processor Module receives messages on the SCP network from the door modules relating to door ajar / closed / locked status, sensed by the door courtesy switch(es).

Where a fault involving a lamp is indicated by the PDU, some basic diagnostic methods may be necessary to confirm that connections are good and that wiring is not damaged, before replacing the components.

Interior Lighting - Door Courtesy Lamp

Removal and Installation

Removal

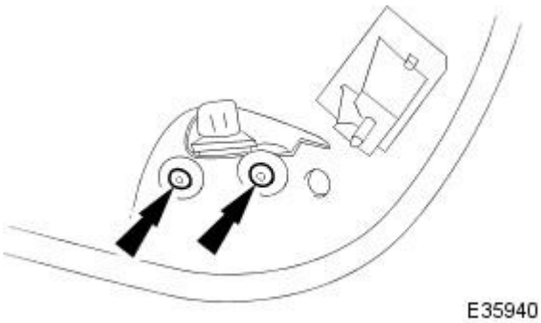

1. Remove door casing for access. Refer to 76.34.01.
2. Remove two screws securing guard lamp to door casing.
3. Remove guard lamp from door casing.

Installation

1. Position guard lamp on door casing.
2. Install securing screws.
3. Install door casing. Refer to 76.34.01.

Published: 11-May-2011

Interior Lighting - Door Courtesy Lamp Bulb

Removal and Installation

Removal

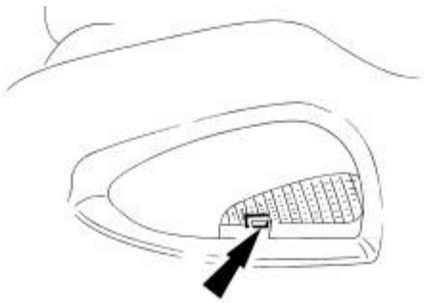

E35941

1. Using a small flat-bladed screwdriver, release guard lamp lens retaining tang and withdraw lens from door.
2. Rotate bulb 1/4 turn and remove bulb from guard lamp.

Installation

1. Install bulb in guard lamp and rotate 1/4 turn to engage.
2. Install lens on guard lamp, ensuring that securing tang is correctly engaged

Interior Lighting - Door Lock Control Switch Bulb

Removal and Installation

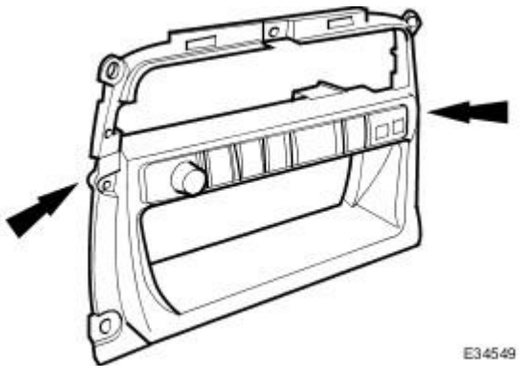

E35993

1. Remove battery cover and disconnect ground cable from battery terminal. Refer to 86.15.19.
2. Remove 'J' gate surround. Refer to 76.25.24.
3. Remove centre console for access. Refer to 76.25.01.
4. Remove radio console for access. Refer to 76.25.15.
5. Disconnect switch module harness multiplug, release module end locaters and lightly press module out of console.
6. Rotate bulb holder 1/4 turn counter-clockwise and remove from module.
7. Remove bulb from holder.

Installation

1. Install bulb in holder.
2. Install bulb and holder in module and rotate 1/4 turn clockwise to fully seat.
3. Install switch module in console ensuring that end locaters are fully seated.
4. Connect switch module harness multiplug.
5. Install radio console. Refer to 76.25.15.
6. Install centre console. Refer to 76.25.01.
7. Install 'J' gate surround. Refer to 76.25.24.
8. Connect ground cable to battery terminal and install battery cover. Refer to 86.15.15.

Interior Lighting - Footwell Lamp

Removal and Installation

Removal

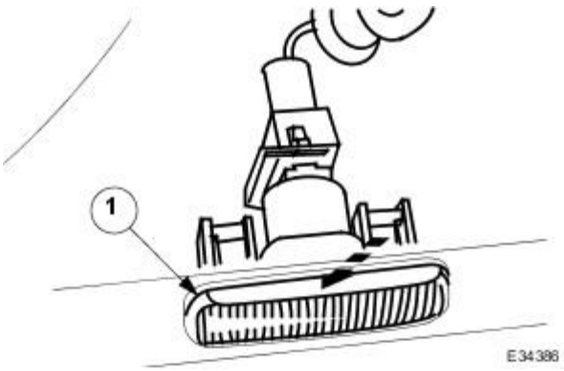

1. Remove the footwell Lamp.

1. Use a screwdriver with a wide flat blade to push the lamp assembly towards the front of the car. This movement will release the rear spring clip which is adjacent to the screwdriver blade.

- Release the front spring clip of the lamp by pulling the lamp rearwards. Remove the lamp from the aperture.

2. Turn the lamp through 90° to allow the connector to pass through the aperture, tilt it slightly and fully remove it.

3. Disconnect the harness connector and remove the lamp.

4. If required, remove the bulb holder and replace the bulb.

Installation

1. Installation is the reverse of removal. Install the new lamp so that the face marked 'REAR' is towards the rear of the vehicle; failure to do this will make the lamp very difficult to remove.

Interior Lighting - Footwell Lamp Bulb

Removal and Installation

Removal

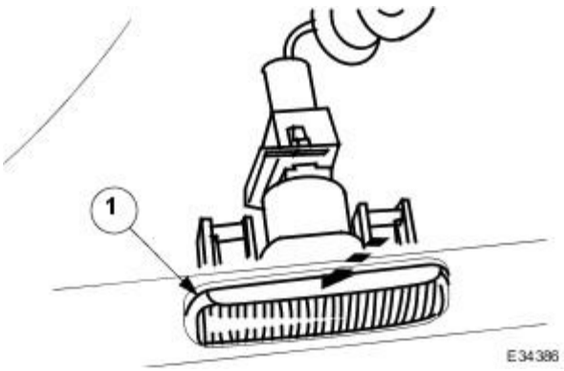

1. Remove the footwell Lamp.

1. Use a screwdriver with a wide flat blade to push the lamp assembly towards the front of the car. This movement will release the rear spring clip which is adjacent to the screwdriver blade.

- Release the front spring clip of the lamp by pulling the lamp rearwards. Remove the lamp from the aperture.

2. Turn the lamp through 90° to allow the connector to pass through the aperture, tilt it slightly and fully remove it.

3. Disconnect the harness connector and remove the lamp.

4. If required, remove the bulb holder and replace the bulb.

Installation

1. Installation is the reverse of removal. Install the new lamp so that the face marked 'REAR' is towards the rear of the vehicle; failure to do this will make the lamp very difficult to remove.

Interior Lighting - Front Interior Lamp

Removal and Installation

Removal

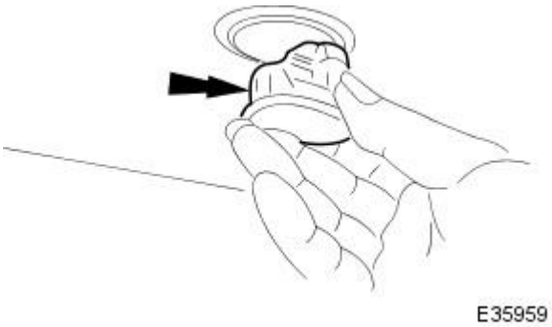

1. Power front seat fully forward.
2. Carefully withdraw interior lamp assembly from headlining

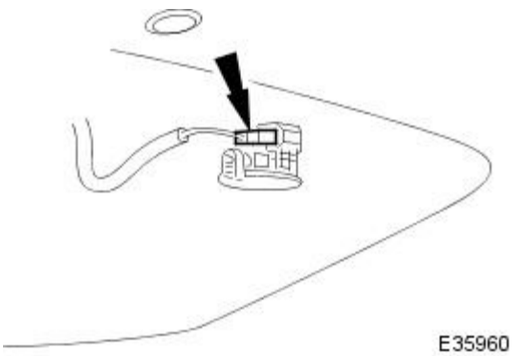

3. Disconnect harness multiplug and remove lamp assembly.

Installation

1. Ensure that interior lamp finisher is correctly positioned on headlining.
2. Position lamp assembly at headlining and connect harness multriplug.
3. Install lamp assembly in finisher.
4. Return front seat to original position.

Interior Lighting - Glove Compartment Lamp

Removal and Installation

Removal

1. Open glovebox lid.
2. Carefully release and remove plastic lens from glovebox light.

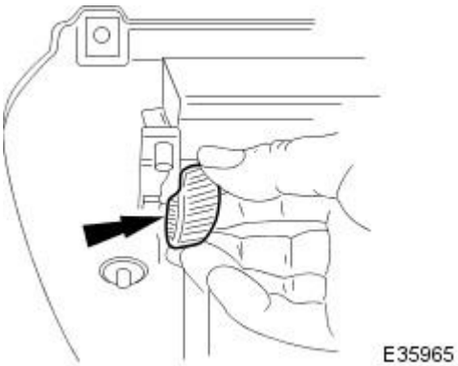

3. Remove bulb from glovebox light.
4. Release light/switch assembly retaining tangs and partially withdraw assembly from glovebox exterior.

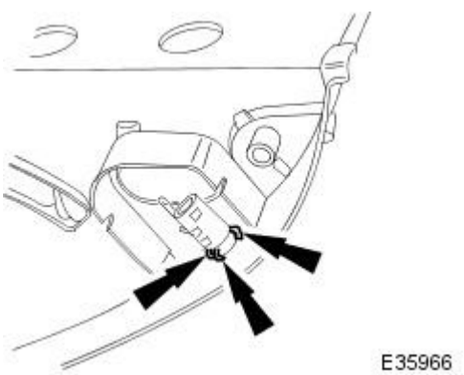

5. Position light/switch assembly for access, disconnect harness spade connectors and remove assembly from glovebox aperture.

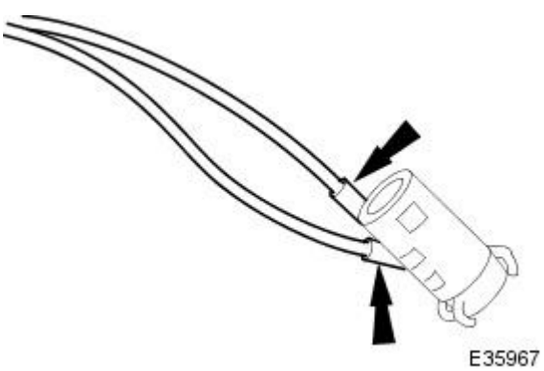

Installation

1. Position light/switch assembly at glovebox aperture and connect harness spade connectors.
2. Install light/switch assembly in aperture, ensuring that retaining tangs are fully seated.
3. Install bulb in light/switch assembly.
4. Check that harness leads are not in contact with the bulb glass.
5. Install plastic lens on light/switch assembly.
6. Close glovebox lid.

Published: 11-May-2011

Interior Lighting - Glove Compartment Lamp Bulb

Removal and Installation

Removal

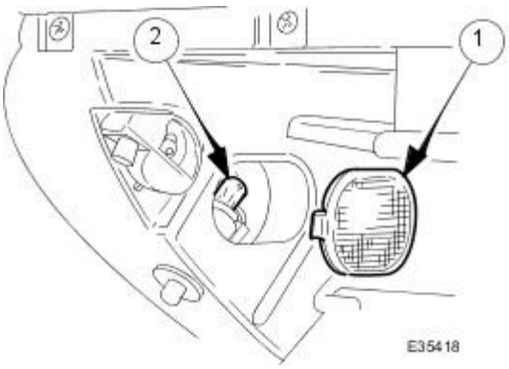

1. Remove the bulb from the glovebox lamp.

1. With the glovebox lid open, carefully prise away the lens.
2. Working through the lens aperture, carefully remove the bulb.

Installation

1. Installation is the reverse of removal.

Published: 11-May-2011

Interior Lighting - Luggage Compartment Lamp

Removal and Installation

Removal

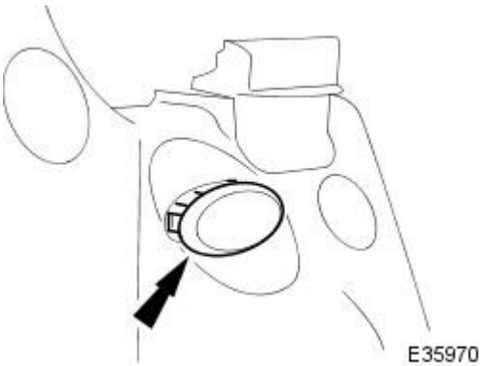

1. Open trunk lid.
2. Using a thin plastic lever, carefully release lamp retaining tangs from trunk rear finisher.

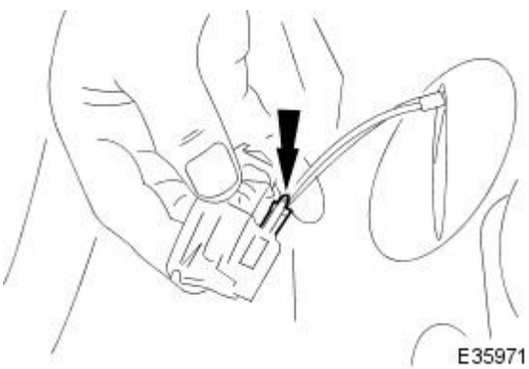

3. Withdraw lamp for access and disconnect harness.

Installation

1. Position lamp for access and connect harness multiplug.
2. Install and fully seat lamp assembly on trunk rear finisher ensuring that retaining tangs correctly engage.
3. Close trunk lid.

Interior Lighting - Luggage Compartment Lamp Bulb

Removal and Installation

Removal

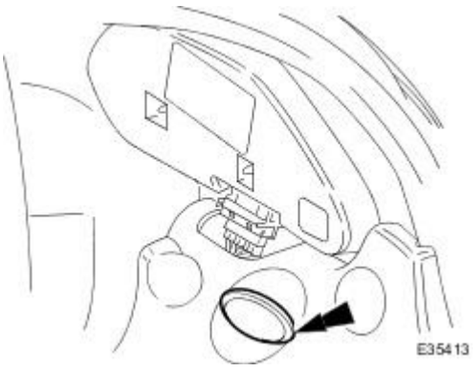

1. Carefully prise the lamp from the luggage compartment trim panel.

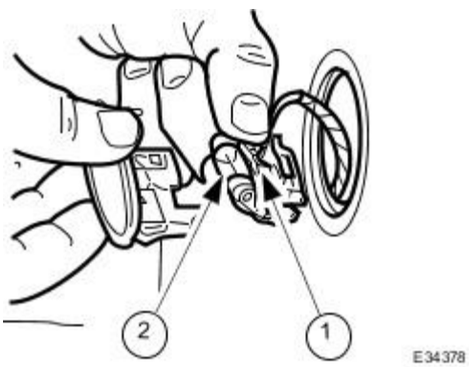

2. Remove the bulb.

1. Squeeze the lens retaining lugs, located one each side of the bulb, and remove the lens.
2. Remove the bulb.

Installation

1. Installation is the reverse of removal.

Interior Lighting - Map Reading Lamp Bulb

Removal and Installation

Removal

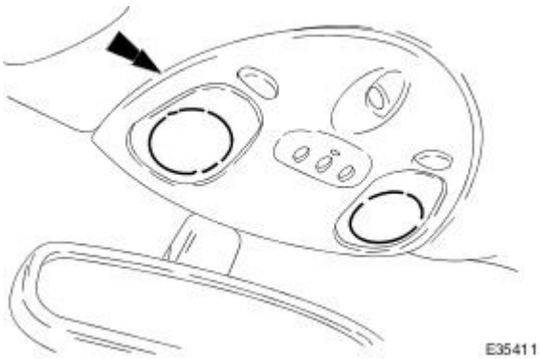

1. Remove the roof console.

- Very carefully prise the console from the roof trim panel.

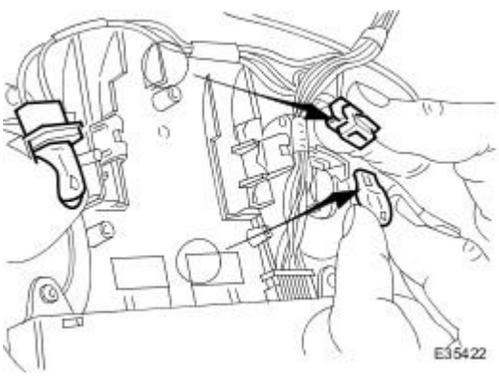

2. Remove the bulb from the console.

1. Remove the relevant bulb holder.
2. Remove the bulb.

Installation

1. Installation is the reverse of removal.

Published: 11-May-2011

Interior Lighting - Rear Interior Lamp Bulb2-Door

Removal and Installation

Removal

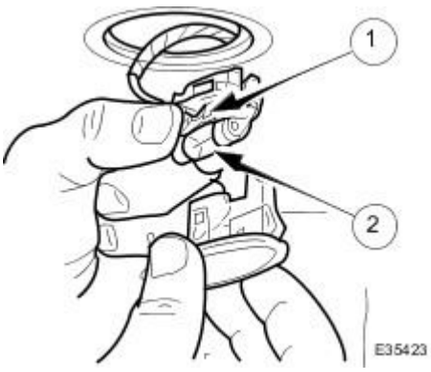

1. Remove the lamp from the roof.

- Carefully prise one side of the lamp assembly from the roof panel.
- Lower the lamp assembly.

2. Remove the bulb from the roof lamp.

1. Squeeze the lens retaining lugs, located one each side of the bulb, and remove the lens.
2. Remove the bulb.

Installation

1. Installation is the reverse of removal.

Interior Lighting - Vanity Mirror Lamp

Removal and Installation

Removal

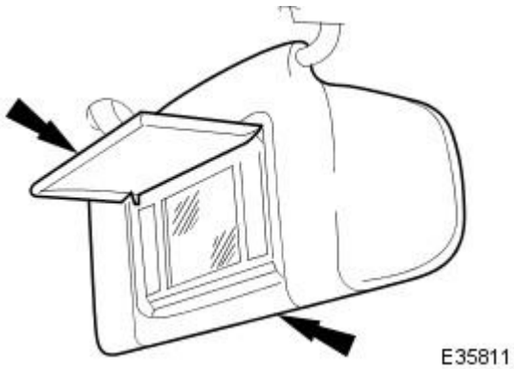

1. Move sun visor to downward position and turn mirror cover upwards.

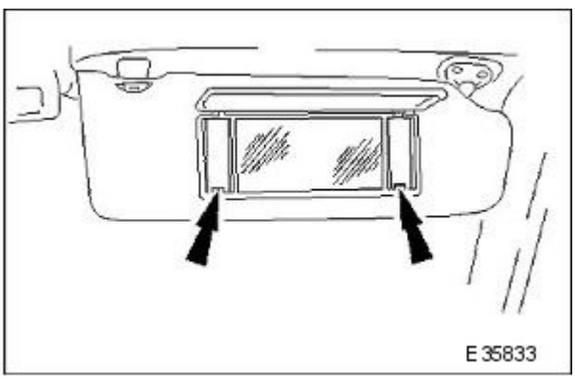

2. Using a small screwdriver or similar thin blade, carefully release illumination lens lower tangs and remove both lenses from mirror assembly.

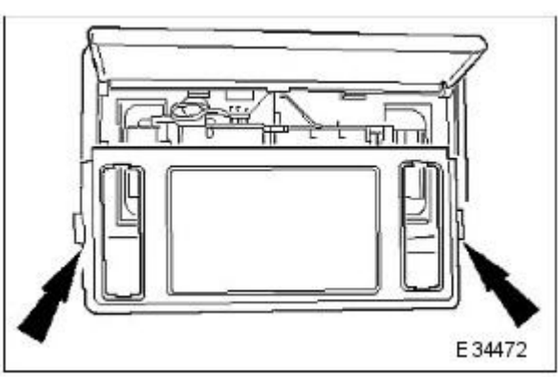

3. Using a small screwdriver or similar thin blade, carefully release side tangs and remove mirror assembly from base.

Installation

1. Ensure that bulbs, bulb holders and switch contactors are correctly positioned and seated.
2. Position mirror assembly on base and press firmly at each side to fully engage tangs.
3. Fit and fully seat mirror illumination lenses.
4. Turn mirror cover downwards and reposition sun visor upwards.

Interior Lighting - Vanity Mirror Lamp Bulb

Removal and Installation

Removal

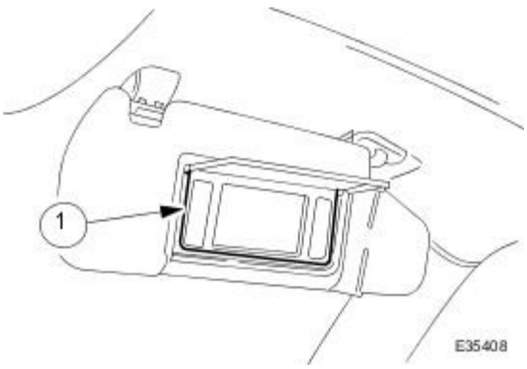

1. Rotate the sun visor down and open the vanity mirror flap.

2. Remove the mirror / lens assembly.

1. Use a flat screwdriver to very carefully prise the mirror / lens assembly from the visor.

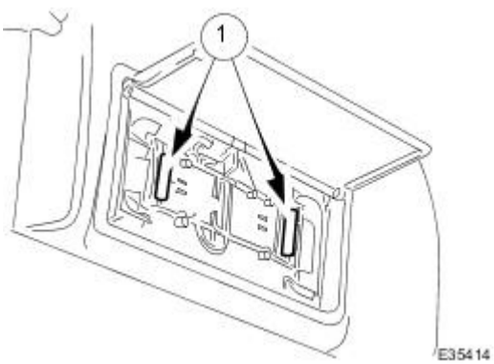

3. Remove the bulb from the vanity mirror lamp(s).

1. Remove the bulb(s) from the holder.

Installation

1. Installation is the reverse of removal.

Published: 11-May-2011

Daytime Running Lamps (DRL) - Daytime Running Lamps (DRL)

Description and Operation

Refer to the Driver's Handbook for details which are specific to the intended market - Canada and Scandinavia.

Published: 11-May-2011

Daytime Running Lamps (DRL) - Daytime Running Lamps (DRL)

Diagnosis and Testing

Tests Using the Portable Diagnostic Unit

Refer to PDU User Guide

The complexity of the electronics involved with the Body Processor and the two multiplexed communication networks which are associated with it, preclude the use of workshop general electrical test equipment. Therefore, reference should be made to the PDU User Guide for detailed instructions on testing the Daytime Running Function.

The Daytime Running function is exactly the same as for the normal operation of the side lamps (or dipped beam, where specified) in as much as the body processor drives the same lamps from the same outputs.

The body processor has been programmed to respond to an alternative set of conditions in order to operate the lamps, instead of waiting for a signal from the normal light switch.

The conditions which have to be set are; ignition switch set to position II or III and sidelight switch set to OFF. The sidelights, side marker lamps (if fitted and enabled), tail lights and number plate lights will all be switched ON.

The PDU systematically tests and analyses all functions of the daytime running lamps.

Where a fault is indicated, some basic diagnostic methods may be necessary to confirm that connections are good and that wiring is not damaged, before replacing a component.

Module Communications Network - Communications Network

Description and Operation

Junction boxes

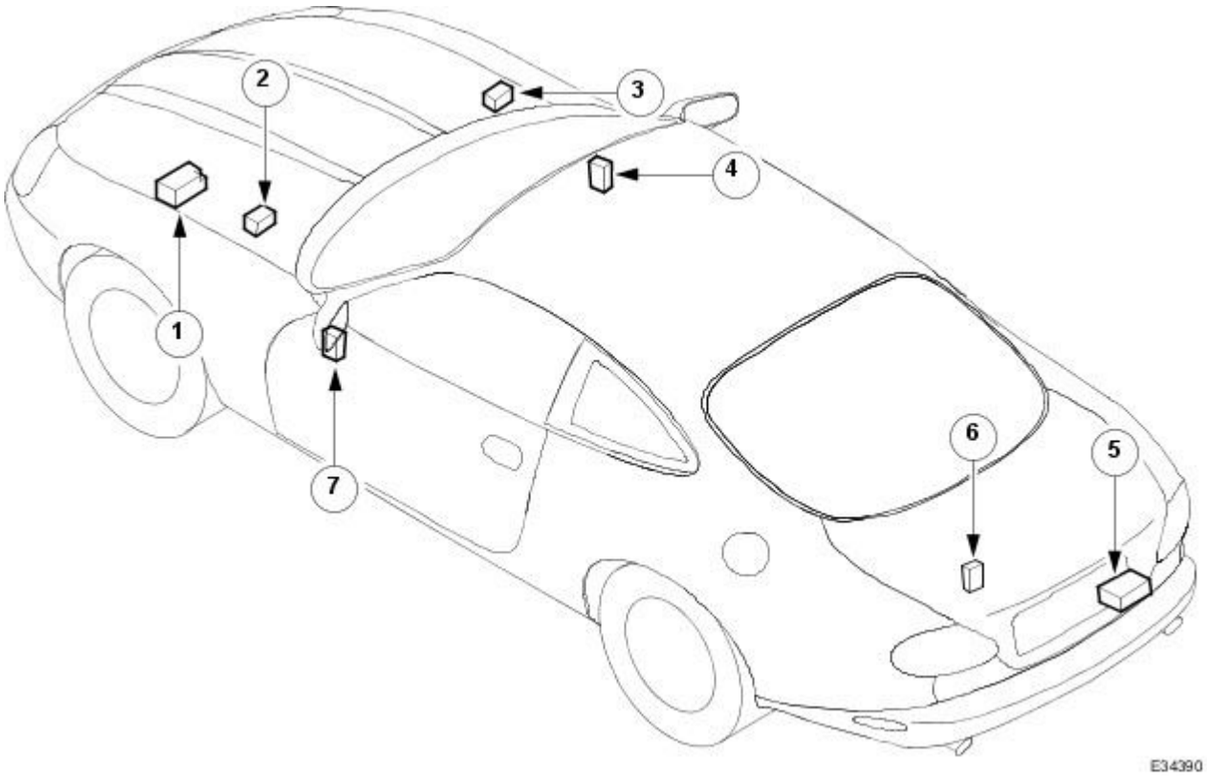

Parts List

Item	Part Number	Description
1	—	Auxiliary junction box
2	—	Engine control module (ECM) junction box - right-hand drive vehicles
3	—	Engine control module (ECM) junction box - left-hand drive vehicles
4	—	Central junction box (CJB) right-hand
5	—	Battery junction box (BJB)
6	—	High power protection module
7	—	Central junction box (CJB) left-hand

There are six fusebox assemblies per vehicle, five of which have conventional, replaceable fuses. The High Power Protection Module does not have conventional fuses.

Two Engine Control Module (ECM) Junction Box is shown. Only one is fitted (LHD or RHD) to any vehicle, on the opposite side to the pedal box.

The High Power Protection Module comprises of two fusible links to protect the starting circuit and the battery positive supply to the other fuse-boxes.

Location of J1962 socket

The J1962 socket is located on the fascia, adjacent to the 'A' pillar on the driver side.

Module Location

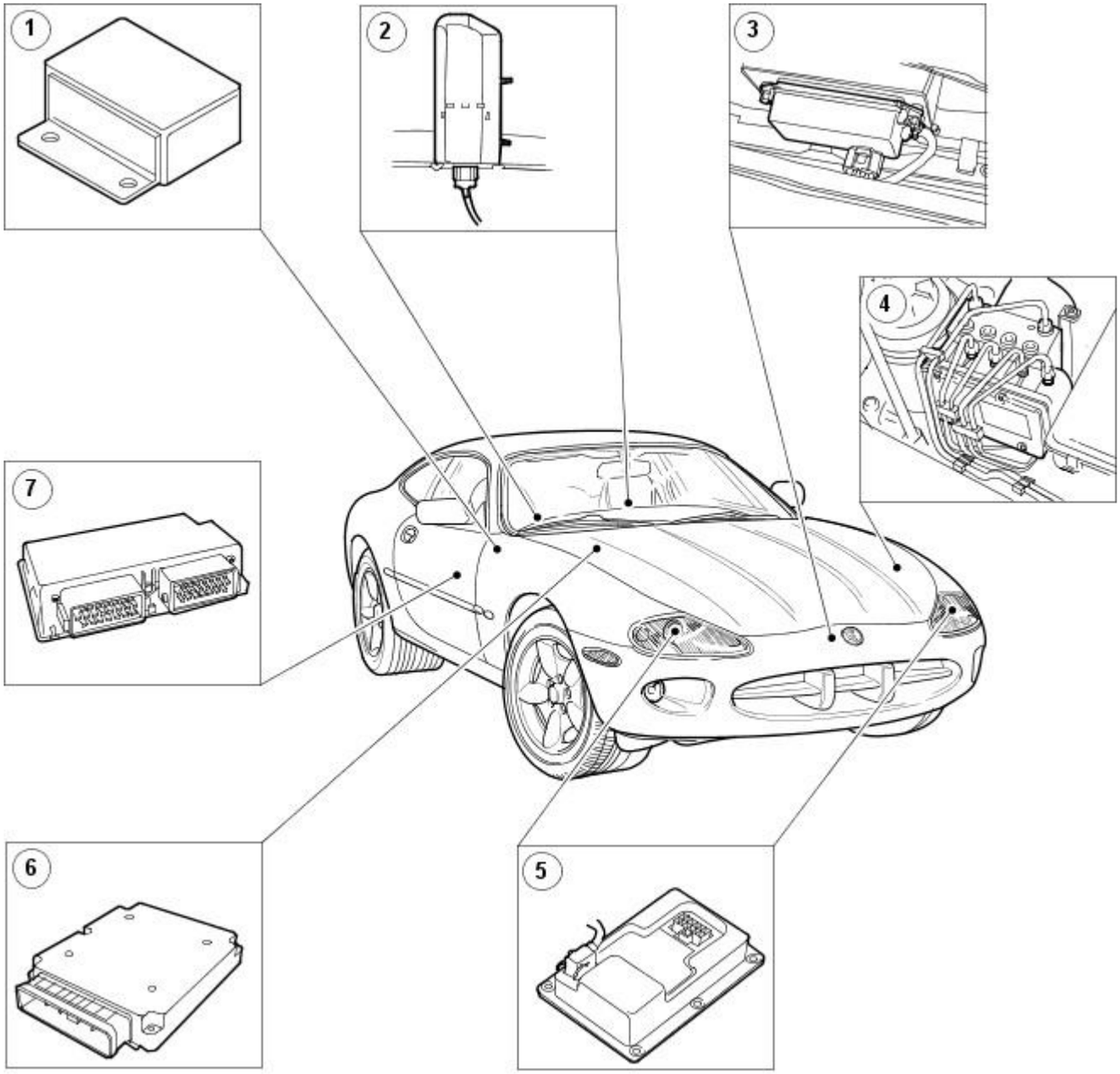

E40982

Item	Part Number	Description
1	-	Passive anti-theft system (PATS) module
2	-	Head restraint control module
3	-	Speed control module - vehicles with adaptive speed control
4	-	Anti-lock brake system (ABS) module
5	-	Ballast and headlamp leveling module
6	-	Engine control module (ECM)
7	-	Driver door module (DDM)

Module Location

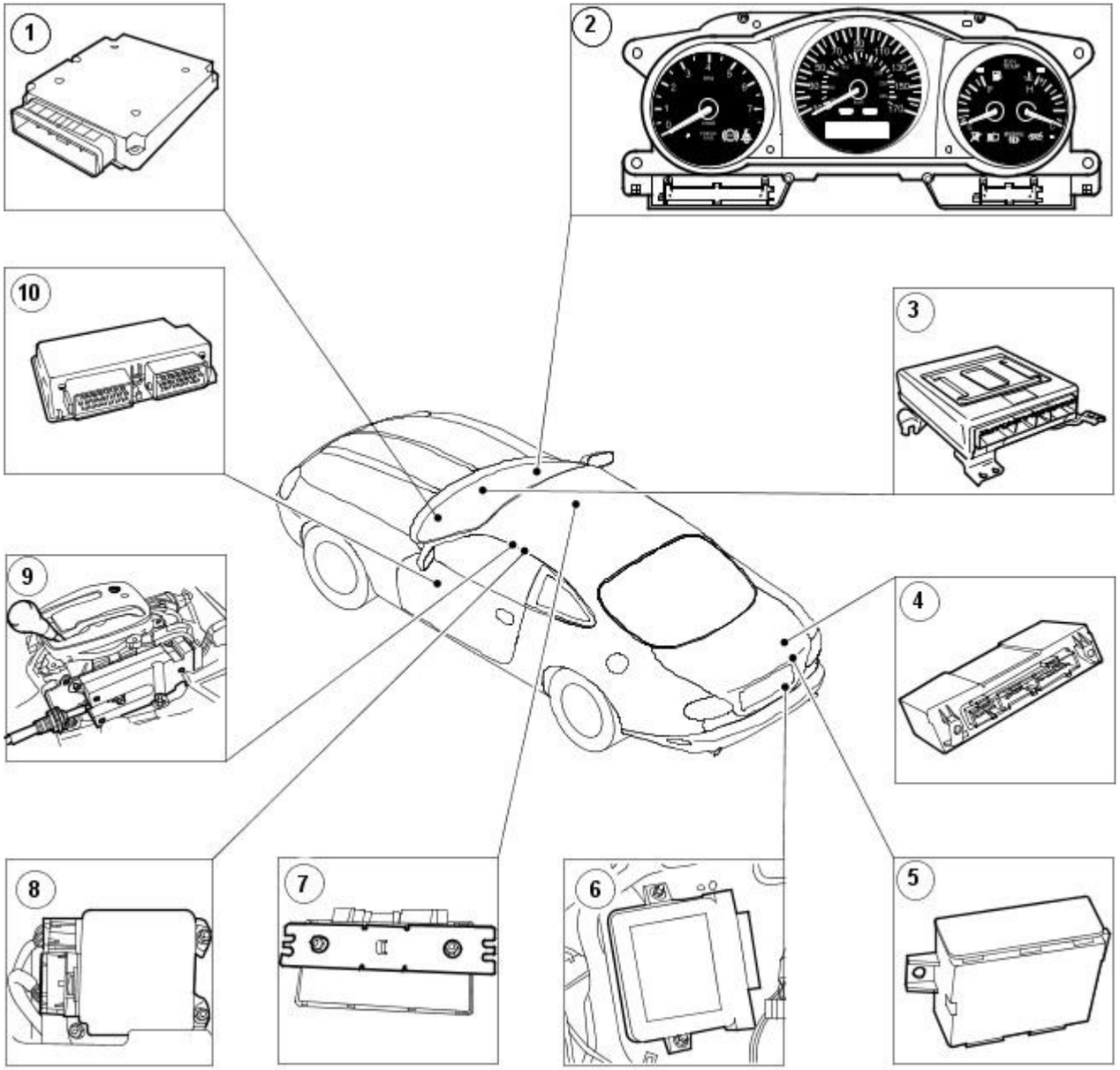

E40983

Item	Part Number	Description
1	-	Multifunction electronic control module
2	-	Instrument cluster
3	-	Climate control module
4	-	Anti-theft alarm and double locking module
5	-	Parking aid module
6	-	Adaptive damping module
7	-	Driver seat module (DSM)
8	-	Restraints control module (RCM)
9	-	Transmission control switch and selector lever indicator assembly
10	-	Passenger door module (PDM)

Published: 11-May-2011

Module Communications Network - Communications Network

Diagnosis and Testing

Principles of Operation

There are three module communication networks connected to the Data Link Connector (DLC), **Controller Area Network, (CAN)**, **Standard Corporate Protocol (SCP)**, and **International Standards Organisation (ISO)**. CAN and SCP are unshielded twisted pair cable; data bus **+** and data bus **-**, while ISO is a single wire system. (The exceptions to this are the Adaptive Damping Control Module (ADCM) and the Air Conditioning Control Module, (A/CCM) which have two wires). The networks can be connected to the Jaguar approved diagnostic system or scan tool by the DLC.

The SCP communication network remains operational even with the severing of one of the bus wires. Communications will also continue if one of the bus wires is shorted to ground or battery positive voltage (B+), or if some, but not all, termination resistors are lost.

The ISO network, however, will not function if the circuit is damaged.

Modules may log DTCs if power supply or ground is interrupted. Supply and ground tests are in this section under the DTC number flagged, or by module name in the pinpoint tests.

The instrument cluster (also known as an instrument cluster module or ICM) is connected to the CAN and SCP communication networks, and forms a "gateway" between the networks. The networks share information, allowing sensors to serve more than one network.

Inspection and Verification

1. **1.** Verify the customer concern.
2. **2.** Confirm which, if any, warning lights and/or messages were displayed on the instrument cluster.

• NOTE: If any warning lights and/or messages were displayed when the fault occurred, refer to the Driver Information table for DTCs associated with the display, then to the DTC index table for possible sources and actions. Some warnings will appear to clear when the ignition is cycled. This is often because the warning has flagged as a result of one of the vehicle's on-board diagnostic routines having run to detect the fault. If the same routine is not run when the ignition is switched **ON**, the warning will not reflag until the routine does run. See the DTC summaries for drive cycle routines.

3. **3.** Visually inspect for obvious signs of mechanical or electrical damage.

Visual Inspection Chart

Electrical
General • Fuses (see table) • Wiring harness • Correct engagement of electrical connectors • Loose or corroded connections **Controller Area Network (CAN)** • Instrument Cluster (IC) • Engine control module (ECM) • Dynamic Stability Control Control Module (DSCCM) • Transmission Control Module (TCM) • Adaptive Speed Control Control Module (ASCCM) • Linear Switch Module • J-Gate illumination Module **Standard Corporate Protocol (SCP)** • Instrument Cluster (IC) • Body Processor Module (BPM) • Security and Locking Control Module (SLCM) • Passenger Door Control Module (PDCM) • Driver Door Control Module (DDCM) • Passenger Head Restraint Control Module (PHRCM) • Passenger Seat Control Module (PSCM) • Driver Seat Control Module (DSCM) • Driver Head Restraint Control Module (DHRCM) **International Standards Organisation (ISO)** • Restraints Control Module (RCM) • Parking Aid Control Module (PACM) • Adaptive Damping Control Module (ADCM) • Engine Control Module (ECM) • Left-hand High Intensity Discharge Headlamp Assembly (HID) • Right-hand High Intensity Discharge Headlamp Assembly (HID) • Key Transponder Module (KTM) • Air Conditioning Control Module (A/CCM) • Body Processor Module (BPM) • Active Security Sounder (ROW only)

Fuse Identification Chart

Fuse	Rating	Circuit	Location
10	10 Amp	Engine Control Module	EMS fuse box, passenger side within bulkhead extension
04	5 Amp	Main Instrument Cluster	Facia fuse box, passenger side
06	5 Amp	Key Transponder Module	Facia fuse box, passenger side
07	15 Amp	Body Processor Module	Facia fuse box, passenger side
08	10 Amp	Driver's Headrest Control Module	Facia fuse box, passenger side

Fuse	Rating	Circuit	Location
10	10 Amp	Airbag Control Module	Facia fuse box, passenger side
13	5 Amp	Diagnostic Connector (battery)	Facia fuse box, passenger side
14	10 Amp	Main Instrument Cluster	Facia fuse box, passenger side
15	25 Amp	Driver's Door Control Module	Facia fuse box, passenger side
16	5 Amp	Linear Switch Module	Facia fuse box, passenger side
18	10 Amp	Engine Control Module	Facia fuse box, passenger side
01	20 Amp	Passenger Seat Control Module	Facia fuse box, driver's side
06	10 Amp	Air Conditioning Control Module	Facia fuse box, driver's side
07	20 Amp	Body Processor Module	Facia fuse box, driver's side
08	10 Amp	Passenger Headrest Control Module	Facia fuse box, driver's side
15	25 Amp	Passenger Door Control Module	Facia fuse box, driver's side
17	15 Amp	Body Processor Module	Facia fuse box, driver's side
01	10 Amp	Transmission Control Module	Engine Compartment fuse box, Left-hand side
03	5 Amp	Security Sounder/HID modules	Engine Compartment fuse box, Left-hand side
04	5 Amp	Dynamic Stability Control Module	Engine Compartment fuse box, Left-hand side
06	20 Amp	Right-hand HID	Engine Compartment fuse box, Left-hand side
08	20 Amp	Left-hand HID	Engine Compartment fuse box, Left-hand side
09	10 Amp	Security Sounder	Engine Compartment fuse box, Left-hand side
19	10 Amp	Right-hand HID	Engine Compartment fuse box, Left-hand side
21	10 Amp	Left-hand HID	Engine Compartment fuse box, Left-hand side
22	5 Amp	Adaptive Speed Control Module	Engine Compartment fuse box, Left-hand side
02	20 Amp	Adaptive Speed Control Module	Luggage compartment fuse box
03	5 Amp	Diagnostic Connector (ignition)	Luggage compartment fuse box
04	5 Amp	Adaptive Damping Control Module	Luggage compartment fuse box
06	5 Amp	Security and Locking Control Module	Luggage compartment fuse box
10	10 Amp	Security and Locking Control Module	Luggage compartment fuse box
13	5 Amp	Reverse Aid, Navigation, DVD unit, TV, VICS (Japan)	Luggage compartment fuse box
16	5 Amp	Navigation, TV and VICS (Japan)	Luggage compartment fuse box

4. **4.** Where the Jaguar approved diagnostic system is available, complete the S93 report before clearing any or all fault codes from the vehicle.

• NOTE: If a DTC cannot be cleared, then there is a permanent fault present that flags again as soon as it is cleared. (The exception to this is P1260, which will only clear following an ignition **OFF**, wait one minute, ignition **ON** cycle after rectification.)

5. **5.** If the cause is not visually evident and the Jaguar approved diagnostic system is not available, use a scan tool to retrieve the fault codes before proceeding to the Diagnostic Trouble Code (DTC) Index Chart, or the Symptom Chart if no DTCs are set.

6. **6.** Using the Jaguar approved diagnostic system where available, and a scan tool where not, check the freeze frame data for information on the conditions applicable when the fault was flagged. The format of this will vary, depending on the tool used, but can provide information useful to the technician in diagnosing the fault.

• CAUTIONS:

Diagnosis by substitution from a donor vehicle is **Not** acceptable. Each vehicle is configured to it's own VID block, and substitution of control modules may not only not confirm a fault, but may cause faults in the vehicle being tested and/or the donor vehicle.

Electronic modules are sensitive to static electrical charges. If exposed to these charges, damage may result.

When probing connectors to take measurements in the course of the pinpoint tests, use the adaptor kit, part number 3548-1358-00.

• NOTE: When performing electrical voltage or resistance tests, always use a digital multimeter (DMM) accurate to 3 decimal places, and with an up-to-date calibration certificate. When testing resistance, always take the resistance of the DMM leads into account.

• NOTE: Check and rectify basic faults before beginning diagnostic routines involving pinpoint tests.

7. **7.** If an obvious cause for an observed or reported concern is found, correct the cause (if possible) before proceeding to the next step

8. **8.** If the cause is not visually evident, verify the symptom and refer to the Diagnostic Trouble Code (DTC) index.

Driver Information Chart

• NOTE: Use this table to identify DTCs associated with the message centre display, then refer to the DTC index for possible sources and actions.

• NOTE: For definitions of Default Modes, see the foot of this table.

Warning light	Message	Default Mode	DTC
Amber	Restricted Performance, DSC fault, DSC system fault	Engine speed limited, Reverse throttle progression enabled	P1637
Amber	Restricted Performance	Engine speed limited, Reverse throttle progression enabled	P1638
Amber	Restricted Performance	Engine speed limited, Reverse throttle progression enabled	P1642
Amber	Restricted Performance	Engine speed limited, Reverse throttle progression enabled	P1643
Amber	Cruise not available	Cruise control inhibited	P1696
Amber	Restricted Performance/Gearbox fault	Gearbox default to set gear	P1796
Amber	Restricted Performance/Gearbox fault	Engine speed limited, reverse throttle progression enabled	P1797

Default mode Definitions

LIMP-HOME MODE

- Throttle motor off
- Throttle motor relay off
- Throttle motor circuit off
- Fuel intervention
- Cruise control inhibited

LIMP-HOME UNAVAILABLE

- Power limitation
- Vehicle speed limited to 120 kph
- Reverse throttle progression enabled
- Cruise Control Inhibited

REVERSE THROTTLE PROGRESSION

- Throttle opening limited to maximum 30%

• NOTE: The throttle operation uses the same map as for reverse gear.

ENGINE SPEED LIMITED

- Engine runs normally, up to 3000 RPM
- Engine speed restricted to 3000 RPM maximum, by fuel cut-off

HIGH IDLE

- Throttle valve kept in fixed position by motor
- Cruise Control Inhibited

SAFETY REDUNDANCY

- Power limitation
- Vehicle speed limited to 120 kph
- Reverse throttle progression enabled
- Cruise Control Inhibited

Diagnostic Trouble Code (DTC) index

DTC	Description	Possible Source	Action
P1637	CAN Engine Control Module (ECM) to Dynamic Stability Control Control Module (DSCCM) network malfunction	• CAN open circuit fault; DSCCM to ECM • CAN short circuit fault • DSCCM power supply/ground fault • DSCCM failure • ECM failure	For open circuit tests, GO to Pinpoint Test A. . For short circuit tests, GO to Pinpoint Test B. . For power supply and ground tests, GO to Pinpoint Test E. . Contact dealer technical support for advice on possible ECM/DSCCM failure.
P1638	CAN ECM to Instrument Cluster (IC) network malfunction	• CAN open circuit fault; IC to ECM • CAN short circuit fault • IC failure • ECM power supply/ground fault • ECM failure	For open circuit tests, GO to Pinpoint Test A. . For short circuit tests, GO to Pinpoint Test B. . For ECM power supply/ground tests, REFER to Section 303-14 Electronic Engine Controls. Contact dealer technical support for advice on possible IC/ECM failure.
P1642	CAN circuit malfunction	• CAN short circuit fault • Control module failure; check for additional flagged DTCs to locate control module source	For short circuit tests, GO to Pinpoint Test B. . Check for additional flagged DTCs, carry out pinpoint test for module indicated.
P1643	CAN ECM to Transmission Control Module (TCM) network malfunction	• CAN open circuit fault; TCM to ECM • CAN short circuit fault • TCM power supply/ground fault • TCM failure • ECM failure	For open circuit tests, GO to Pinpoint Test A. . For short circuit tests, GO to Pinpoint Test B. . For TCM power supply/ground tests, GO to Pinpoint Test F. . Contact dealer technical support for advice on possible TCM/ECM failure.
P1696	CAN ECM to Adaptive Speed Control Control Module (ASCCM) network malfunction	• CAN open circuit fault; ASCCM to ECM • CAN short circuit fault • ASCCM power supply/ground fault • ASCCM failure • ECM failure	For open circuit tests, GO to Pinpoint Test A. . For short circuit tests, GO to Pinpoint Test B. . For power supply/ground tests, GO to Pinpoint Test G. . Contact dealer technical support for advice on possible ASCCM/ECM failure.
P1699	CAN ECM to A/CCM network malfunction	• CAN open circuit fault; A/CCM to ECM • CAN short circuit fault • A/CCM power supply/ground fault • A/CCM failure • ECM failure	For open circuit tests, GO to Pinpoint Test A. . for short circuit tests, GO to Pinpoint Test B. . For power supply/ground tests, GO to Pinpoint Test H. . Contact dealer technical support for advice on possible A/CCM/ECM failure.
P1774	CAN TCM to linear switch module network malfunction	• CAN open circuit fault; TCM to linear switch module • CAN short circuit fault • Linear switch module power supply/ground fault • Linear switch module failure	For open circuit tests, GO to Pinpoint Test A. . For short circuit tests, GO to Pinpoint Test B. . For linear switch module power supply/ground tests, GO to Pinpoint Test I. . For linear switch module, REFER to Section 307-05 Automatic Transmission/Transaxle External Controls.
P1796	CAN network fault	• CAN open circuit or short circuit fault • TCM power/ground fault • TCM/control valve failure	For open circuit tests, GO to Pinpoint Test A. . For short circuit tests, GO to Pinpoint Test B. . For TCM power supply/ground tests, GO to Pinpoint Test F. . For TCM/control valve, REFER to Section 307-01 Automatic Transmission/Transaxle.
P1797	CAN TCM/ECM network malfunction	• CAN open circuit fault; TCM to ECM • CAN short circuit fault • ECM failure • TCM/control valve failure	For open circuit tests, GO to Pinpoint Test A. . For short circuit tests, GO to Pinpoint Test B. . Contact dealer technical support for advice on possible ECM failure. For TCM/control valve, REFER to Section 307-01 Automatic Transmission/Transaxle.

DTC	Description	Possible Source	Action
P1798	CAN TCM to IC network malfunction	• CAN open circuit fault; TCM to IC • CAN short circuit fault • IC failure • TCM/control valve failure	For open circuit tests, GO to Pinpoint Test A. . For short circuit tests, GO to Pinpoint Test B. . For IC, REFER to Section 413-01 Instrument Cluster. For TCM/control valve, REFER to Section 307-01 Automatic Transmission/Transaxle.
P1799	CAN TCM to DSCCM network malfunction	• CAN open circuit fault; TCM to DSCCM • CAN short circuit fault • DSCCM failure • TCM/control valve failure	For open circuit tests, GO to Pinpoint Test A. . For short circuit tests, GO to Pinpoint Test B. . For DSCCM, REFER to Section 206-09 Anti-Lock Control - Stability Assist. For TCM/control valve, REFER to Section 307-01 Automatic Transmission/Transaxle.
U1003 (PATS)	Standard Corporate Protocol (SCP) key status message; incorrect discrete identification number	• Instrument cluster configuration error • BPM SCP key status error	Reconfigure the IC, reprogramme the keys
U1041 (CATS)	Vehicle speed signal from IC invalid	• Vehicle speed circuit between IC and ADCM; open circuit, short circuit to ground, short circuit to B+, high resistance • IC CAN network fault	For speed circuit tests, GO to Pinpoint Test J. . For open circuit tests, GO to Pinpoint Test A. . For short circuit tests, GO to Pinpoint Test B. .
U1041 (BPM)	Vehicle speed SCP message invalid	• IC to BPM SCP circuit; open circuit, short circuit to B+, short circuit to ground • IC CAN network fault • SCP network fault	For IC to BPM circuit tests, GO to Pinpoint Test K. . For CAN circuit tests, GO to Pinpoint Test A. . GO to Pinpoint Test B. . For SCP network tests, GO to Pinpoint Test C. .
U1041 (DDCM)	Vehicle speed SCP message invalid	• IC to DDCM SCP circuit; open circuit, short circuit to B+, short circuit to ground • IC CAN network fault • SCP network fault	For IC to DDCM circuit tests, GO to Pinpoint Test L. . For CAN circuit tests, GO to Pinpoint Test A. . GO to Pinpoint Test B. . For SCP network tests, GO to Pinpoint Test C. .
U1041 (SLCM)	Vehicle speed SCP message invalid	• IC to SLCM SCP circuit; open circuit, short circuit to B+, short circuit to ground • IC CAN network fault • SCP network fault	For IC to SLCM circuit tests, GO to Pinpoint Test M. . For CAN circuit tests, GO to Pinpoint Test A. . GO to Pinpoint Test B. . For SCP network tests, GO to Pinpoint Test C. .
U1135 (DDCM)	Ignition status (ignition switch position) not obtained	• Ignition switch to BPM switched ground circuit(s) fault • BPM SCP key status error • BPM SCP network fault • SCP network fault	For ignition switched ground tests, GO to Pinpoint Test N. . For SCP network tests, GO to Pinpoint Test C. .
U1135 (DSCM)	Ignition status (ignition switch position) not obtained	• Ignition switch to BPM switched ground circuit(s) fault • BPM SCP key status error • BPM SCP network fault • SCP network fault	For ignition switched ground tests, GO to Pinpoint Test N. . For SCP network tests, GO to Pinpoint Test C. .
U1135 (PDCM)	Ignition status (ignition switch position) not obtained	• Ignition switch to BPM switched ground circuit(s) fault • BPM SCP key status error • BPM SCP network fault • SCP network fault	For ignition switched ground tests, GO to Pinpoint Test N. . For SCP network tests, GO to Pinpoint Test C. .
U1135 (PSCM)	Ignition status (ignition switch position) not obtained	• Ignition switch to BPM switched ground circuit(s) fault • BPM SCP key status error • BPM SCP network fault • SCP network fault	For ignition switched ground tests, GO to Pinpoint Test N. . For SCP network tests, GO to Pinpoint Test C. .
U1135 (SLCM)	Ignition status (ignition switch position) not obtained	• Ignition switch to BPM switched ground circuit(s) fault • BPM SCP key status error • BPM SCP network fault • SCP network fault	For ignition switched ground tests, GO to Pinpoint Test N. . For SCP network tests, GO to Pinpoint Test C. .
U1147 (PATS)	SCP key status message missing	• Ignition switch to BPM switched ground circuit(s) fault • BPM SCP key status error • BPM SCP network fault • SCP network fault	For ignition switched ground tests, GO to Pinpoint Test N. . For SCP network tests, GO to Pinpoint Test C. .
U1236 (A/CCM)	Control panel to A/CCM serial communication circuit fault	• Control panel to A/CCM serial communication data input circuit; open circuit, short circuit to ground, short circuit to B+, high resistance • Control panel failure	For data circuit tests, GO to Pinpoint Test O. .
U1260 (IC)	SCP + circuit failure	• SCP + circuit; open circuit, short circuit to B +, short circuit to ground	For SCP network tests, GO to Pinpoint Test C. .

DTC	Description	Possible Source	Action
U1261 (IC)	SCP - circuit failure	• SCP - circuit; open circuit, short circuit to B +, short circuit to ground	For SCP network tests, GO to Pinpoint Test C. .
U1262 (DHRCM)	SCP network circuit fault (ignition status [ignition switch position] periodically not obtained)	• SCP network circuit; open circuit, short circuit to B +, short circuit to ground • BPM SCP failure • SCP network fault	For SCP network tests, GO to Pinpoint Test C. .
U1262 (PHRCM)	SCP network circuit fault (ignition status [ignition switch position] periodically not obtained)	• SCP network circuit; open circuit, short circuit to B +, short circuit to ground • BPM SCP failure • SCP network fault	For SCP network tests, GO to Pinpoint Test C. .
U1264 (A/CCM)	Control panel to A/CCM serial communication circuit fault	• Control panel to A/CCM serial communication data output circuit; open circuit, short circuit to ground, short circuit to B +, high resistance • Control panel failure	For data circuit tests, GO to Pinpoint Test O. .
U1900 (IC)	CAN communications fault	• CAN circuit; open circuit, short cicuit to B +, short circuit to ground • IC internal, CAN fault • CAN network fault	For open circuit tests, GO to Pinpoint Test A. . For short circuit tests, GO to Pinpoint Test B. .
U1909 (DSCCM)	Local CAN (steering angle sensor, yaw rate and lateral acceleration sensor) communication fault	• Local CAN circuit; open circuit, short circuit to B +, short circuit to ground • DSCCM internal local CAN fault • Local CAN fault	For local CAN circuit tests, GO to Pinpoint Test P. .
U2012 (BPM)	Key transponder module message corrupt	• KTM to BPM data circuit; open circuit, short circuit to B +, short circuit to ground, high resistance • Key transponder module failure	For KTM to BPM circuit tests, GO to Pinpoint Test Q. .
U2012 (DSCCM)	CAN communication fault	• CAN circuit; open circuit, short circuit to B +, short circuit to ground • DSCCM internal CAN fault • CAN fault	For open circuit tests, GO to Pinpoint Test A. . For short circuit tests, GO to Pinpoint Test B. .
U2202 (DSCCM)	CAN invalid configuration data received	• ECM, TCM or DSCCM incorrectly configured	Reconfigure modules
U2510 (IC)	CAN challenge response error	• Failed IC/ECM PATS challenge	Reconfigure the ECM and/or IC (incorrectly configured following replacement)
U2511 (IC)	Incorrect ECM CAN data received	• "Engine start" remains disabled by ECM after receiving valid PATS data - ECM PATS error	Contact dealer technical support for advice on possible ECM failure
U2515 (DSCCM)	CAN adaptive speed control message missing	• TCM CAN DTC flagged	For CAN open circuit tests, GO to Pinpoint Test A. . For CAN short circuit tests, GO to Pinpoint Test B. .
U2515 (IC)	CAN adaptive speed control message missing	• ASCCM CAN message missing	For CAN open circuit tests, GO to Pinpoint Test A. . For CAN short circuit tests, GO to Pinpoint Test B. .
U2516 (ASCCM)	CAN TCM message missing	• TCM CAN DTC flagged	For CAN open circuit tests, GO to Pinpoint Test A. . For CAN short circuit tests, GO to Pinpoint Test B. .
U2520 (ASCCM)	CAN IC module missing	• IC CAN circuit; open circuit, short circuit to B +, short circuit to ground • IC CAN fault • CAN fault	For CAN open circuit tests, GO to Pinpoint Test A. . For CAN short circuit tests, GO to Pinpoint Test B. .
U2521 (ASCCM)	CAN DSCCM module missing	• DSCCM CAN circuit; open circuit, short circuit to B +, short circuit to ground • DSCCM CAN fault • CAN fault	For CAN open circuit tests, GO to Pinpoint Test A. . For CAN short circuit tests, GO to Pinpoint Test B. .
U2521 (IC)	CAN DSCCM message missing	• DSCCM CAN DTC flagged	For CAN open circuit tests, GO to Pinpoint Test A. . For CAN short circuit tests, GO to Pinpoint Test B. .
U2522 (ASCCM)	CAN TCM module missing	• TCM CAN circuit; open circuit, short circuit to B +, short circuit to ground • TCM CAN fault • CAN fault	For CAN open circuit tests, GO to Pinpoint Test A. . For CAN short circuit tests, GO to Pinpoint Test B. .
U2522 (DSCCM)	CAN TCM module missing	• TCM CAN circuit; open circuit, short circuit to B +, short circuit to ground • TCM CAN fault • CAN fault	For CAN open circuit tests, GO to Pinpoint Test A. . For CAN short circuit tests, GO to Pinpoint Test B. .
U2522 (IC)	CAN TCM message missing	• TCM CAN DTC flagged	For CAN open circuit tests, GO to Pinpoint Test A. . For CAN short circuit tests, GO to Pinpoint Test B. .

DTC	Description	Possible Source	Action
U2523 (ASCCM)	CAN ECM module missing	• ECM CAN circuit; open circuit, short circuit to B +, short circuit to ground • ECM CAN fault • CAN fault	For CAN open circuit tests, GO to Pinpoint Test A. . For CAN short circuit tests, GO to Pinpoint Test B. .
U2523 (DSCCM)	CAN ECM module missing	• ECM CAN circuit; open circuit, short circuit to B +, short circuit to ground • ECM CAN fault • CAN fault	For CAN open circuit tests, GO to Pinpoint Test A. . For CAN short circuit tests, GO to Pinpoint Test B. .
U2523 (IC)	CAN ECM message missing	• ECM CAN DTC flagged	For CAN open circuit tests, GO to Pinpoint Test A. . For CAN short circuit tests, GO to Pinpoint Test B. .
U2527 (DSCCM)	Local CAN (steering angle sensor, yaw rate and lateral acceleration sensor) transmit fault	• Local CAN circuit; open circuit, short circuit to B +, short circuit to ground • DSCCM internal local CAN fault • Local CAN fault	For local CAN circuit tests, GO to Pinpoint Test P. .

Power Supply/Ground test index

Description	Possible Source	Action
BPM supply or ground failure	• BPM permanent supply fault • BPM ground fault	For BPM supply/ground tests, GO to Pinpoint Test R. .
SLCM supply or ground failure	• SLCM permanent supply fault • SLCM ground fault	For SLCM supply/ground tests, GO to Pinpoint Test S. .
PDCM supply or ground failure	• PDCM permanent supply fault • PDCM ground fault	For PDCM supply/ground tests, GO to Pinpoint Test T. .
DDCM supply or ground failure	• DDCM permanent supply fault • DDCM ground fault	For DDCM supply/ground tests, GO to Pinpoint Test U. .
PHRCM supply or ground failure	• PHRCM permanent supply fault • PHRCM ground fault	For PHRCM supply/ground tests, GO to Pinpoint Test V. .
PSCM supply failure	• PSCM permanent supply fault	For PSCM supply tests, GO to Pinpoint Test W. .
DSCM supply failure	• DSCM permanent supply fault	For DSCM supply tests, GO to Pinpoint Test X. .
DHRCM supply or ground failure	• DHRCM permanent supply fault • DHRCM ground fault	For DHRCM supply/ground tests, GO to Pinpoint Test Y. .
Major IC supply or ground failure	• Major IC permanent supply fault • Major IC ignition switched supply fault • Major IC ground fault	For Major IC supply/ground tests, GO to Pinpoint Test Z. .
RCM supply or ground failure	• RCM ignition switched supply fault • RCM ground fault	For RCM supply/ground tests, GO to Pinpoint Test AA. .
PACM supply or ground failure	• PACM accessory switched supply fault • PACM ground fault	For PACM supply/ground tests, GO to Pinpoint Test AB. .
ADCM supply or ground failure	• ADCM permanent supply fault • ADCM ignition switched supply fault • ADCM ground fault	For ADCM supply/ground tests, GO to Pinpoint Test AC. .
Left-hand HID headlamp supply or ground failure	• Left-hand HID headlamp ignition switched supply fault • Left-hand HID headlamp ground fault	For Left-hand HID headlamp supply/ground tests, GO to Pinpoint Test AD. .
Right-hand HID headlamp supply or ground failure	• Right-hand HID headlamp ignition switched supply fault • Right-hand HID headlamp ground fault	For Right-hand HID headlamp supply/ground tests, GO to Pinpoint Test AE. .
KTM supply or ground failure	• KTM permanent supply fault • KTM accessory switched ground fault • KTM ignition switched ground fault • KTM ground fault	For KTM supply/ground tests, GO to Pinpoint Test AF. .

Pinpoint Tests

PINPOINT TEST A : CHECK THE CONTROLLER AREA NETWORK FOR OPEN CIRCUIT	
TEST CONDITIONS	**DETAILS/RESULTS/ACTIONS**
A1: CHECK THE CAN NETWORK FOR CONTINUITY	
	1 Measure the resistance between the diagnostic connector, FC53, pins 06 (Y) and 14 (G).
	Is the resistance 60 ohms? **Yes** GO to A2. **No** GO to A6.
A2: CHECK THE ECM CAN + CIRCUIT FOR CONTINUITY	
	1 Disconnect the battery negative terminal.
	2 Disconnect the ECM electrical connector, EM80.

	3 Measure the resistance between FC53, pin 06 (Y) and EM80, pin 124 (Y).
	Is the resistance greater than 5 ohms? **Yes** REPAIR the circuit between splice EMS34 (Y) and EM80, pin 124 (Y). **No** GO to A3.
A3: CHECK THE ECM CAN - CIRCUIT FOR CONTINUITY	
	1 Measure the resistance between FC53, pin 14 (G) and EM80, pin 123 (G).
	Is the resistance greater than 5 ohms? **Yes** REPAIR the circuit between splice EMS35 (G) and EM80, pin 123 (G). **No** GO to A4.
A4: CHECK THE TCM CAN + CIRCUIT FOR CONTINUITY	
	1 Reconnect the ECM electrical connector, EM80.
	2 Disconnect the TCM electrical connector, GB02.
	3 Measure the resistance between FC53, pin 06 (Y) and GB02, pin 06 (Y).
	Is the resistance greater than 5 ohms? **Yes** REPAIR the circuit between splice EMS32 (Y) and GB02, pin 06 (Y). **No** GO to A5.
A5: CHECK THE TCM CAN - CIRCUIT FOR CONTINUITY	
	1 Measure the resistance between FC53, pin 06 (Y) and GB02, pin 06 (Y).
	Is the resistance greater than 5 ohms? **Yes** REPAIR the circuit between splice EMS33 (G) and GB02, pin 02 (G). **No** GO to B.
A6: CHECK THE CAN + CIRCUIT BETWEEN THE DIAGNOSTIC CONNECTOR AND THE INSTRUMENT CLUSTER FOR CONTINUITY	
	1 Disconnect the IC electrical connector, FC25.
	2 Measure the resistance between FC53, pin 06 (Y) and FC25, pin 10 (Y).
	Is the resistance greater than 5 ohms? **Yes** REPAIR the high resistance circuit. For additional information, refer to the wiring diagrams. Test the system for normal operation. **No** GO to A7.
A7: CHECK THE CAN - CIRCUIT BETWEEN THE DIAGNOSTIC CONNECTOR AND THE INSTRUMENT CLUSTER FOR CONTINUITY	
	1 Measure the resistance between FC53, pin 14 (G) and FC25, pin 24 (G).
	Is the resistance greater than 5 ohms? **Yes** REPAIR the high resistance circuit. For additional information, refer to the wiring diagrams. Test the system for normal operation. **No** GO to A8.
A8: CHECK THE IC FOR CORRECT TERMINATION	
	1 Measure the resistance between pins 11 and 23 of the IC.
	Is the resistance 120 ohms? **Yes** GO to A9. **No** Contact dealer technical support for advice on possible IC failure.
A9: CHECK THE CAN + CIRCUIT BETWEEN THE INSTRUMENT CLUSTER AND THE J-GATE ILLUMINATION MODULE FOR CONTINUITY	
	1 Disconnect the J-Gate illumination module electrical connector, FC88.
	2 Measure the resistance between FC25, pin 11 (Y) and FC88, pin 09 (Y).
	Is the resistance greater than 5 ohms? **Yes** REPAIR the high resistance circuit. For additional information, refer to the wiring diagrams. Test the system for normal operation. **No** GO to A10.
A10: CHECK THE CAN - CIRCUIT BETWEEN THE INSTRUMENT CLUSTER AND THE J-GATE ILLUMINATION MODULE FOR CONTINUITY	
	1 Measure the resistance between FC25, pin 23 (G) and FC88, pin 08 (G).
	Is the resistance greater than 5 ohms? **Yes** REPAIR the high resistance circuit. For additional information, refer to the wiring diagrams. Test the system for normal operation. **No** GO to A11.
A11: CHECK THE CAN + CIRCUIT BETWEEN THE J-GATE ILLUMINATION MODULE AND THE LINEAR SWITCH MODULE FOR CONTINUITY	
	1 Disconnect the Linear switch module electrical connector, FC100.
	2 Measure the resistance between FC88, pin 04 (Y) and FC100, pin 08 (Y).
	Is the resistance greater than 5 ohms? **Yes** REPAIR the high resistance circuit. For additional information, refer to the wiring diagrams. Test the system for normal operation. **No** GO to A12.
A12: CHECK THE CAN - CIRCUIT BETWEEN THE J-GATE ILLUMINATION MODULE AND THE LINEAR SWITCH MODULE FOR CONTINUITY	
	1 Measure the resistance between FC88, pin 03 (G) and FC100, pin 07 (G).

	Is the resistance greater than 5 ohms? **Yes** REPAIR the high resistance circuit. For additional information, refer to the wiring diagrams. Test the system for normal operation. **No** GO to A13.
A13: CHECK THE CAN + CIRCUIT BETWEEN THE LINEAR SWITCH MODULE AND THE ADAPTIVE SPEED CONTROL CONTROL MODULE FOR CONTINUITY	
	1 Disconnect the ASCCM electrical connector, LF61.
	2 Measure the resistance between FC100, pin 03 (Y) and LF61, pin 10 (Y).
	Is the resistance greater than 5 ohms? **Yes** REPAIR the high resistance circuit. For additional information, refer to the wiring diagrams. Test the system for normal operation. **No** GO to A14.
A14: CHECK THE CAN - CIRCUIT BETWEEN THE LINEAR SWITCH MODULE AND THE ADAPTIVE SPEED CONTROL CONTROL MODULE FOR CONTINUITY	
	1 Measure the resistance between FC100, pin 02 (G) and LF61, pin 04 (G).
	Is the resistance greater than 5 ohms? **Yes** REPAIR the high resistance circuit. For additional information, refer to the wiring diagrams. Test the system for normal operation. **No** GO to A15.
A15: CHECK THE CAN + CIRCUIT BETWEEN THE ADAPTIVE SPEED CONTROL CONTROL MODULE AND THE DSCCM FOR CONTINUITY	
	1 Disconnect the DSCCM electrical connector, LF37.
	2 Measure the resistance between LF61, pin 11 (Y) and LF37, pin 11 (Y).
	Is the resistance greater than 5 ohms? **Yes** REPAIR the high resistance circuit. For additional information, refer to the wiring diagrams. Test the system for normal operation. **No** GO to A16.
A16: CHECK THE CAN - CIRCUIT BETWEEN THE ADAPTIVE SPEED CONTROL CONTROL MODULE AND THE DSCCM FOR CONTINUITY	
	1 Measure the resistance between LF61, pin 05 (G) and LF37, pin 15 (G).
	Is the resistance greater than 5 ohms? **Yes** REPAIR the high resistance circuit. For additional information, refer to the wiring diagrams. Test the system for normal operation. **No** GO to A17.
A17: CHECK THE DSCCM FOR CORRECT TERMINATION	
	1 Measure the resistance between pins 11 and 15 of the DSCCM.
	Is the resistance 120 ohms? **Yes** GO to B. **No** Contact dealer technical support for advice on possible DSCCM failure.

PINPOINT TEST B : CHECK THE CONTROLLER AREA NETWORK FOR SHORT CIRCUIT	
TEST CONDITIONS	**DETAILS/RESULTS/ACTIONS**
B1: CHECK THE CAN + FOR SHORT CIRCUIT TO BATTERY	
	1 Measure the resistance between pins 06 (Y) and 16 (NW) of the diagnostic connector (FC53).
	Is the resistance less than 10,000 ohms? **Yes** REPAIR the short circuit. For additional information, refer to the wiring diagrams. Test the system for normal operation. **No** GO to B2.
B2: CHECK THE CAN + FOR SHORT CIRCUIT TO IGNITION POSITIVE	
	1 Turn the ignition switch to the ON position.
	2 Measure the resistance between pins 06 (Y) and 09 (WU) of the diagnostic connector (FC53).
	Is the resistance less than 10,000 ohms? **Yes** REPAIR the short circuit. For additional information, refer to the wiring diagrams. Test the system for normal operation. **No** GO to B3.
B3: CHECK THE CAN + FOR SHORT CIRCUIT TO GROUND	
	1 Turn the ignition switch to the OFF position.
	2 Measure the resistance between pins 06 (Y) and 04 (BK) of the diagnostic connector (FC53).
	3 Measure the resistance between pins 06 (Y) and 05 (BK) of the diagnostic connector (FC53).
	Is either resistance less than 10,000 ohms? **Yes** REPAIR the short circuit. For additional information, refer to the wiring diagrams. Test the system for normal operation. **No** GO to B4.
B4: CHECK THE CAN + FOR SHORT CIRCUIT TO ACCESSORY SWITCHED GROUND	
	1 Turn the ignition switch to the ACCESSORY position.
	2 Measure the resistance between pins 06 (Y) and 08 (WR) of the diagnostic connector (FC53).

	Is the resistance less than 10,000 ohms? **Yes** REPAIR the short circuit. For additional information, refer to the wiring diagrams. Test the system for normal operation. **No** GO to B5.
B5: CHECK THE CAN + FOR SHORT CIRCUIT TO IGNITION SWITCHED GROUND	
	1 Turn the ignition switch to the ON position.
	2 Measure the resistance between pins 06 (Y) and 01 (WU) of the diagnostic connector (FC53).
	Is the resistance less than 10,000 ohms? **Yes** REPAIR the short circuit. For additional information, refer to the wiring diagrams. Test the system for normal operation. **No** GO to B6.
B6: CHECK THE CAN - FOR SHORT CIRCUIT TO BATTERY	
	1 Measure the resistance between pins 14 (G) and 16 (NW) of the diagnostic connector (FC53).
	Is the resistance less than 10,000 ohms? **Yes** REPAIR the short circuit. For additional information, refer to the wiring diagrams. Test the system for normal operation. **No** GO to B7.
B7: CHECK THE CAN - FOR SHORT CIRCUIT TO IGNITION POSITIVE	
	1 Turn the ignition switch to the ON position.
	2 Measure the resistance between pins 14 (G) and 09 (WU) of the diagnostic connector (FC53).
	Is the resistance less than 10,000 ohms? **Yes** REPAIR the short circuit. For additional information, refer to the wiring diagrams. Test the system for normal operation. **No** GO to B8.
B8: CHECK THE CAN - FOR SHORT CIRCUIT TO GROUND	
	1 Turn the ignition switch to the OFF position.
	2 Measure the resistance between pins 14 (G) and 04 (BK) of the diagnostic connector (FC53).
	3 Measure the resistance between pins 14 (G) and 05 (BK) of the diagnostic connector (FC53).
	Is either resistance less than 10,000 ohms? **Yes** REPAIR the short circuit. For additional information, refer to the wiring diagrams. Test the system for normal operation. **No** GO to B9.
B9: CHECK THE CAN - FOR SHORT CIRCUIT TO ACCESSORY SWITCHED GROUND	
	1 Turn the ignition switch to the ACCESSORY position.
	2 Measure the resistance between pins 14 (G) and 08 (WR) of the diagnostic connector (FC53).
	Is the resistance less than 10,000 ohms? **Yes** REPAIR the short circuit. For additional information, refer to the wiring diagrams. Test the system for normal operation. **No** GO to B10.
B10: CHECK THE CAN - FOR SHORT CIRCUIT TO IGNITION SWITCHED GROUND	
	1 Turn the ignition switch to the ON position.
	2 Measure the resistance between pins 06 (Y) and 01 (WU) of the diagnostic connector (FC53).
	Is the resistance less than 10,000 ohms? **Yes** REPAIR the short circuit. For additional information, refer to the wiring diagrams. Test the system for normal operation. **No** No circuit fault found in Controller Area Network. Check for DTCs indicating an individual module fault. Refer to the DTC index.

PINPOINT TEST C : CHECK THE SCP NETWORK CIRCUIT	
TEST CONDITIONS	**DETAILS/RESULTS/ACTIONS**
C1: CHECK FOR CORRECT BUS TERMINATION IN THE SCP + NETWORK	
	1 Measure the resistance between pins 02 (Y) and 05 (BK) of the diagnostic connector, FC53.
	Is the resistance between 90 and 150 ohms? **Yes** Termination is correct. Check for DTCs indicating a module or circuit fault. Refer to the DTC index. **No** GO to C2.
C2: CHECK THE SCP + FOR SHORT CIRCUIT TO BATTERY	
	1 Measure the voltage across pins 02 (Y) and 16 (NW) of the diagnostic connector.
	Is the voltage greater than 3 volts? **Yes** REPAIR the short circuit. For additional information, refer to the wiring diagrams. Test the system for normal operation. **No** GO to C3.
C3: CHECK THE SCP + FOR SHORT CIRCUIT TO IGNITION +	
	1 Turn the ignition switch to the ON position.
	2 Measure the voltage across pins 02 (Y) and 09 (WU) of the diagnostic connector.

	Is the voltage greater than 3 volts? **Yes** REPAIR the short circuit. For additional information, refer to the wiring diagrams. Test the system for normal operation. **No** GO to C4.
C4: CHECK THE SCP + FOR SHORT CIRCUIT TO GROUND	
	1 Measure the resistance between pins 02 (Y) and 05 (BK) of the diagnostic connector.
	Is the resistance less than 90 ohms? **Yes** REPAIR the short circuit. For additional information, refer to the wiring diagrams. Test the system for normal operation. **No** GO to C5.
C5: CHECK THE SCP - FOR SHORT CIRCUIT TO BATTERY	
	1 Measure the voltage across pins 10 (U) and 16 (NW) of the diagnostic connector.
	Is the voltage greater than 3 volts? **Yes** REPAIR the short circuit. For additional information, refer to the wiring diagrams. Test the system for normal operation. **No** GO to C6.
C6: CHECK THE SCP - FOR SHORT CIRCUIT TO IGNITION +	
	1 Turn the ignition switch to the ON position.
	2 Measure the voltage across pins 10 (U) and 09 (WU) of the diagnostic connector.
	Is the voltage greater than 3 volts? **Yes** REPAIR the short circuit. For additional information, refer to the wiring diagrams. Test the system for normal operation. **No** GO to C7.
C7: CHECK THE SCP - FOR SHORT CIRCUIT TO GROUND	
	1 Measure the resistance between pins 10 (U) and 05 (BK) of the diagnostic connector.
	Is the resistance less than 10,000 ohms? **Yes** REPAIR the short circuit. For additional information, refer to the wiring diagrams. Test the system for normal operation. **No** GO to C8.
C8: CHECK FOR SHORT CIRCUIT BETWEEN SCP + AND SCP -	
	1 Measure the resistance between pins 10 (U) and 02 (BK) of the diagnostic connector.
	Is the resistance less than 10,000 ohms? **Yes** REPAIR the short circuit. For additional information, refer to the wiring diagrams. Test the system for normal operation. **No** Check for DTCs indicating a faulty module or circuit. Refer to the DTC index.

PINPOINT TEST D : CHECK THE ISO NETWORK CIRCUIT	
TEST CONDITIONS	**DETAILS/RESULTS/ACTIONS**
D1: CHECK THE ISO "K" LINE FOR SHORT CIRCUIT TO BATTERY	
	1 Measure the voltage between pins 07 (O) and 16 (NW) of the diagnostic connector.
	Is the voltage greater than 3 volts? **Yes** REPAIR the short circuit. For additional information, refer to the wiring diagrams. Test the system for normal operation. **No** GO to D2.
D2: CHECK THE ISO "K" LINE FOR SHORT CIRCUIT TO IGNITION +	
	1 Turn the ignition switch to the ON position.
	2 Measure the voltage between pins 07 (O) and 09 (WU) of the diagnostic connector.
	Is the voltage greater than 3 volts? **Yes** REPAIR the short circuit. For additional information, refer to the wiring diagrams. Test the system for normal operation. **No** GO to D3.
D3: CHECK THE ISO "K" LINE FOR SHORT CIRCUIT TO GROUND	
	1 Turn the ignition switch to the OFF position.
	2 Measure the resistance between pin 07 (O) and GROUND.
	Is the resistance less than 10,000 ohms? **Yes** REPAIR the short circuit. For additional information, refer to the wiring diagrams. Test the system for normal operation. **No** GO to D4.
D4: CHECK THE ISO "L" LINE FOR SHORT CIRCUIT TO BATTERY (ADCM AND A/CCM ONLY)	
	1 Measure the voltage between pins 15 (W) and 16 (NW) of the diagnostic connector.
	Is the voltage greater than 3 volts? **Yes** REPAIR the short circuit. For additional information, refer to the wiring diagrams. Test the system for normal operation. **No** GO to D5.
D5: CHECK THE ISO "L" LINE FOR SHORT CIRCUIT TO IGNITION + (ADCM AND A/CCM ONLY)	
	1 Turn the ignition switch to the ON position.

	2 Measure the voltage between pins 15 (W) and 09 (WU) of the diagnostic connector.
	Is the voltage greater than 3 volts? **Yes** REPAIR the short circuit. For additional information, refer to the wiring diagrams. Test the system for normal operation. **No** GO to D6.
D6: CHECK THE ISO "L" LINE FOR SHORT CIRCUIT TO GROUND (ADCM AND A/CCM ONLY)	
	1 Turn the ignition switch to the OFF position.
	2 Measure the resistance between pin 15 (W) and GROUND.
	Is the resistance less than 10,000 ohms? **Yes** REPAIR the short circuit. For additional information, refer to the wiring diagrams. Test the system for normal operation. **No** GO to D7.
D7: CHECK FOR HIGH RESISTANCE IN THE ISO CIRCUIT TO THE RESTRAINTS CONTROL MODULE (RCM)	
	1 Disconnect the RCM electrical connector, FC08.
	2 Measure the resistance between FC08, pin 11 (O) and pin 07 (O) of the diagnostic connector.
	Is the resistance greater than 5 ohms? **Yes** REPAIR the high resistance circuit. This circuit includes splice FCS16. For additional information, refer to the wiring diagrams. Test the system for normal operation. **No** GO to D8.
D8: CHECK FOR HIGH RESISTANCE IN THE ISO CIRCUIT TO THE PARKING AID CONTROL MODULE (PACM)	
	1 Reconnect the RCM electrical connector, FC08.
	2 Disconnect the PACM electrical connector, BT04.
	3 Measure the resistance between BT04, pin 12 (O) and pin 07 (O) of the diagnostic connector.
	Is the resistance greater than 5 ohms? **Yes** REPAIR the high resistance circuit. This circuit includes splices BTS45, and FCS16. For additional information, refer to the wiring diagrams. Test the system for normal operation. **No** GO to D9.
D9: CHECK FOR HIGH RESISTANCE IN THE ISO "K" LINE CIRCUIT TO THE ADAPTIVE DAMPING CONTROL MODULE (ADCM)	
	1 Reconnect the PACM electrical connector, BT04.
	2 Disconnect the ADCM electrical connector, BT69.
	3 Measure the resistance between BT69, pin 10 (O) and pin 07 (O) of the diagnostic connector.
	Is the resistance greater than 5 ohms? **Yes** REPAIR the high resistance circuit. This circuit includes splice FCS16. For additional information, refer to the wiring diagrams. Test the system for normal operation. **No** GO to D10.
D10: CHECK FOR HIGH RESISTANCE IN THE ISO "L" LINE CIRCUIT TO THE ADAPTIVE DAMPING CONTROL MODULE (ADCM)	
	1 Measure the resistance between BT69, pin 28 (W) and pin 15 (W) of the diagnostic connector.
	Is the resistance greater than 5 ohms? **Yes** REPAIR the high resistance circuit. This circuit includes splice FCS15. For additional information, refer to the wiring diagrams. Test the system for normal operation. **No** GO to D11.
D11: CHECK FOR HIGH RESISTANCE IN THE ISO CIRCUIT TO THE ENGINE CONTROL MODULE (ECM)	
	1 Reconnect the ADCM electrical connector, BT69.
	2 Disconnect the ECM electrical connector, EM80.
	3 Measure the resistance between EM80, pin 105 (O) and pin 07 (O) of the diagnostic connector.
	Is the resistance greater than 5 ohms? **Yes** REPAIR the high resistance circuit. This circuit includes splice FCS16. For additional information, refer to the wiring diagrams. Test the system for normal operation. **No** GO to D12.
D12: CHECK FOR HIGH RESISTANCE IN THE ISO CIRCUIT TO THE LEFT-HAND HIGH INTENSITY DISCHARGE HEADLAMP ASSEMBLY (HID)	
	1 Reconnect the ECM electrical connector, EM80.
	2 Disconnect the HID electrical connector, LF30.
	3 Measure the resistance between LF30, pin 05 (O) and pin 07 (O) of the diagnostic connector.
	Is the resistance greater than 5 ohms? **Yes** REPAIR the high resistance circuit. This circuit includes splices LFS10 and FCS16. For additional information, refer to the wiring diagrams. Test the system for normal operation. **No** GO to D13.
D13: CHECK FOR HIGH RESISTANCE IN THE ISO CIRCUIT TO THE RIGHT-HAND HIGH INTENSITY DISCHARGE HEADLAMP ASSEMBLY (HID)	
	1 Reconnect the HID electrical connector, LF30.
	2 Disconnect the HID electrical connector, LF23.
	3 Measure the resistance between LF23, pin 05 (O) and pin 07 (O) of the diagnostic connector.
	Is the resistance greater than 5 ohms? **Yes** REPAIR the high resistance circuit. This circuit includes splices LFS10 and FCS16. For additional information, refer to the wiring diagrams. Test the system for normal operation. **No** GO to D14.
D14: CHECK FOR HIGH RESISTANCE IN THE ISO "K" LINE CIRCUIT TO THE AIR CONDITIONING CONTROL MODULE (A/CCM)	

	1 Reconnect the HID electrical connector, LF23.
	2 Disconnect the A/CCM electrical connector, AC04.
	3 Measure the resistance between AC04, pin 21 (O) and pin 07 (O) of the diagnostic connector.
	Is the resistance greater than 5 ohms? **Yes** REPAIR the high resistance circuit. This circuit includes splice FCS16. For additional information, refer to the wiring diagrams. Test the system for normal operation. **No** GO to D15.
D15: CHECK FOR HIGH RESISTANCE IN THE ISO "L" LINE CIRCUIT TO THE AIR CONDITIONING CONTROL MODULE (A/CCM)	
	1 Measure the resistance between AC04, pin 10 (W) and pin 05 (W) of the diagnostic connector.
	Is the resistance greater than 5 ohms? **Yes** REPAIR the high resistance circuit. This circuit includes splice FCS15. For additional information, refer to the wiring diagrams. Test the system for normal operation. **No** GO to D16.
D16: CHECK FOR HIGH RESISTANCE IN THE ISO CIRCUIT TO THE KEY TRANSPONDER MODULE (KTM)	
	1 Reconnect the A/CCM electrical connector, AC04.
	2 Disconnect the KTM electrical connector, FC22.
	3 Measure the resistance between FC22, pin 06 (O) and pin 07 (O) of the diagnostic connector.
	Is the resistance greater than 5 ohms? **Yes** REPAIR the high resistance circuit. This circuit includes splice FCS16. For additional information, refer to the wiring diagrams. Test the system for normal operation. **No** Actions for testing BPM and Active Security Sounder?

PINPOINT TEST E : DTC P1637; CHECK THE DSCCM SUPPLIES AND GROUNDS	
TEST CONDITIONS	**DETAILS/RESULTS/ACTIONS**
E1: CHECK THE IGNITION SWITCHED POWER SUPPLY TO THE DSCCM	
	1 Disconnect the DSCCM electrical connector, LF37.
	2 Turn the ignition switch to the ON position.
	3 Measure the voltage between LF37, pin 04 (WU) and GROUND.
	Is the voltage less than 10 volts? **Yes** REPAIR the circuit between the DSCCM and battery. This circuit includes the engine compartment fuse box, (fuse 4) the ignition positive relay and the high power protection module. For additional information, refer to the wiring diagrams. Test the system for normal operation. **No** GO to E2.
E2: CHECK THE PERMANENT SUPPLIES TO THE DSCCM	
	1 Turn the ignition switch to the OFF position.
	2 Measure the voltage between LF37, pin 01 (NR) and GROUND.
	3 Measure the voltage between LF37, pin 32 (NW) and GROUND.
	Is either voltage less than 10 volts? **Yes** REPAIR the circuit between the DSCCM and battery. This circuit includes the engine compartment fuse box, (fuses 16 and 18) and the high power protection module. For additional information, refer to the wiring diagrams. Test the system for normal operation. **No** GO to E3.
E3: CHECK THE PERMANENT GROUNDS TO THE DSCCM	
	1 Measure the resistance between LF37, pin 16 (B) and GROUND.
	2 Measure the resistance between LF37, pin 47 (B) and GROUND.
	Is either resistance greater than 5 ohms? **Yes** REPAIR the high resistance circuit. For additional information, refer to the wiring diagrams. Test the system for normal operation. **No** GO to E4.
E4: CHECK THE SWITCHED GROUND TO THE DSCCM	
	1 Close the DSC switch on the center console.
	2 Measure the resistance between LF37, pin 38 (R) and GROUND.
	Is the resistance greater than 5 ohms? **Yes** REPAIR the high resistance circuit. Make sure the switch is closing fully before beginning harness tests. For additional information, refer to the wiring diagrams. Test the system for normal operation. **No** If the CAN tests are satisfactory, contact dealer technical support for advice on possible DSCCM failure.

PINPOINT TEST F : DTC P1643; CHECK THE TCM SUPPLIES AND GROUNDS	
TEST CONDITIONS	**DETAILS/RESULTS/ACTIONS**
F1: CHECK THE PERMANENT POWER SUPPLY TO THE TCM	
	1 Turn the ignition switch to the OFF position.
	2 Disconnect the TCM electrical connector, GB02.
	3 Measure the voltage between GB02, pin 14 (NR) and GROUND.
	Is the voltage less than 10 volts? **Yes** REPAIR the circuit between the TCM and battery. This circuit includes the engine management fuse box, (fuse 4) and the high ppower protection module. For additional information, refer to the wiring diagrams. Test the system for normal operation. **No** GO to F2.

F2: CHECK THE IGNITION SWITCHED POWER SUPPLY TO THE TCM	
	1 Turn the ignition switch to the ON position.
	2 Measure the voltage between GB02, pin 09 (WB) and GROUND.
	Is the voltage less than 10 volts? **Yes** REPAIR the circuit between the TCM and battery. This circuit includes the engine compartment fuse box, (fuse 1) the ignition positive relay and the high power protection module. For additional information, refer to the wiring diagrams. Test the system for normal operation. **No** GO to F3.
F3: CHECK THE PERMANENT GROUNDS TO THE TCM	
	1 Measure the resistance between GB02, pin 13 (B) and GROUND.
	2 Measure the resistance between GB02, pin 16 (B) and GROUND.
	Is either resistance greater than 5 ohms? **Yes** REPAIR the high resistance circuit. For additional information, refer to the wiring diagrams. Test the system for normal operation. **No** If the CAN tests are satisfactory, contact dealer technical support for advice on possible TCM failure.

PINPOINT TEST G : DTC P1696; CHECK THE ASCCM SUPPLIES AND GROUNDS	
TEST CONDITIONS	**DETAILS/RESULTS/ACTIONS**
G1: CHECK THE PERMANENT POWER SUPPLY TO THE ASCCM	
	1 Disconnect the ASCCM electrical connector, LF61.
	2 Measure the voltage between LF61, pin 01 (NW) and GROUND.
	Is the voltage less than 10 volts? **Yes** REPAIR the circuit between the ASCCM and battery. This circuit includes the engine compartment fuse box, (fuse 22) and the high power protection module. For additional information, refer to the wiring diagrams. Test the system for normal operation. **No** GO to G2.
G2: CHECK THE IGNITION SWITCHED POWER SUPPLY TO THE ASCCM	
	1 Turn the ignition switch to the ON position.
	2 Measure the voltage between LF61, pin 07 (WR) and GROUND.
	Is the voltage less than 10 volts? **Yes** REPAIR the circuit between the ASCCM and battery. This circuit includes the engine compartment fuse box, (fuse 3) the ignition positive relay and the high power protection module. For additional information, refer to the wiring diagrams. Test the system for normal operation. **No** GO to G3.
G3: CHECK THE PERMANENT GROUND TO THE ASCCM	
	1 Measure the resistance between LF61, pin 02 (B) and GROUND.
	Is the resistance greater than 5 ohms? **Yes** REPAIR the high resistance circuit. For additional information, refer to the wiring diagrams. Test the system for normal operation. **No** If the CAN tests are satisfactory, contact dealer technical support for advice on possible TCM failure.

PINPOINT TEST H : DTC P1699; CHECK THE A/CCM SUPPLIES AND GROUNDS	
TEST CONDITIONS	**DETAILS/RESULTS/ACTIONS**
H1: CHECK THE PERMANENT POWER SUPPLY TO THE A/CCM	
	1 Disconnect the A/CCM electrical connector, AC04.
	2 Measure the voltage between AC04, pin 05 (NW) and GROUND.
	Is the voltage less than 10 volts? **Yes** REPAIR the circuit between the A/CCM and battery. This circuit includes the passenger side fuse box, (fuse 6) and the high power protection module. For additional information, refer to the wiring diagrams. Test the system for normal operation. **No** GO to H2.
H2: CHECK THE IGNITION SWITCHED POWER SUPPLY TO THE ASCCM	
	1 Turn the ignition switch to the ON position.
	2 Measure the voltage between AC04, pin 01 (WU) and GROUND.
	Is the voltage less than 10 volts? **Yes** REPAIR the circuit between the A/CCM and battery. This circuit includes the driver side fuse box, (fuse 12) the ignition positive relay and the high power protection module. For additional information, refer to the wiring diagrams. Test the system for normal operation. **No** GO to H3.
H3: CHECK THE PERMANENT GROUND TO THE A/CCM	
	1 Measure the resistance between AC04, pin 20 (BK) and GROUND.
	Is the resistance greater than 5 ohms? **Yes** REPAIR the high resistance circuit. For additional information, refer to the wiring diagrams. Test the system for normal operation. **No** GO to H4.
H4: CHECK THE ACCESSORY SWITCHED GROUND TO THE A/CCM	
	1 Turn the ignition switch to the ACC position.
	2 Measure the resistance between AC04, pin 03 (WR) and GROUND.

	Is the resistance greater than 5 ohms? **Yes** REPAIR the high resistance circuit. For additional information, refer to the wiring diagrams. Test the system for normal operation. **No** If the CAN tests are satisfactory, contact dealer technical support for advice on possible A/CCM failure.

PINPOINT TEST I : DTC P1774; CHECK THE LINEAR SWITCH MODULE SUPPLIES AND GROUNDS	
TEST CONDITIONS	**DETAILS/RESULTS/ACTIONS**
I1: CHECK THE IGNITION SWITCHED POWER SUPPLY TO THE LINEAR SWITCH MODULE	
	1 Disconnect the linear switch module electrical connector, FC100.
	2 Turn the ignition switch to the ON position.
	3 Measure the voltage between FC100, pin 04 (WR) and GROUND.
	Is the voltage less than 10 volts? **Yes** REPAIR the circuit between the linear switch module and battery. This circuit includes the driver side fuse box, (fuse 16) the ignition positive relay and the high power protection module. For additional information, refer to the wiring diagrams. Test the system for normal operation. **No** GO to I2.
I2: CHECK THE PERMANENT GROUND TO THE LINEAR SWITCH MODULE	
	1 Measure the resistance between FC100, pin 11 (B) and GROUND.
	Is the resistance greater than 5 ohms? **Yes** REPAIR the high resistance circuit. For additional information, refer to the wiring diagrams. Test the system for normal operation. **No** If the CAN tests are satisfactory, contact dealer technical support for advice on possible linear switch module failure.

PINPOINT TEST J : DTC U1041 (CATS); VEHICLE SPEED SIGNAL FROM IC TO ADCM INVALID	
TEST CONDITIONS	**DETAILS/RESULTS/ACTIONS**
J1: CHECK THE CIRCUIT BETWEEN IC AND ADCM FOR HIGH RESISTANCE	
	1 Disconnect the IC electrical connector, FC26.
	2 Disconnect the ADCM electrical connector, BT69.
	3 Measure the resistance between FC26, pin 07 (OG) and BT69, pin 24 (OG).
	Is the resistance greater than 5 ohms? **Yes** REPAIR the high resistance circuit. For additional information, refer to the wiring diagrams. Test the system for normal operation. **No** GO to J2.
J2: CHECK THE CIRCUIT BETWEEN IC AND ADCM FOR SHORT CIRCUIT TO BATTERY	
	1 Measure the voltage between FC26, pin 07 (OG) and GROUND.
	Is the voltage greater than 3 volts? **Yes** REPAIR the short circuit. For additional information, refer to the wiring diagrams. Test the system for normal operation. **No** GO to J3.
J3: CHECK THE CIRCUIT BETWEEN IC AND ADCM FOR SHORT CIRCUIT TO GROUND	
	1 Measure the resistance between FC26, pin 07 (OG) and GROUND.
	Is the resistance less than 10,000 ohms? **Yes** REPAIR the short circuit. For additional information, refer to the wiring diagrams. Test the system for normal operation. **No** If the CAN tests are satisfactory, contact dealer technical support for advice on possible IC or ADCM failure.

PINPOINT TEST K : DTC U1041 (BPM); VEHICLE SPEED SCP MESSAGE INVALID	
TEST CONDITIONS	**DETAILS/RESULTS/ACTIONS**
K1: CHECK THE IC TO BPM SCP + CIRCUIT FOR HIGH RESISTANCE	
	1 Disconnect the IC electrical connnector, FC25.
	2 Disconnect the BPM electrical connector, FC14.
	3 Measure the resistance between FC25, pin 13 (Y) and FC14, pin 85 (Y).
	Is the resistance greater than 5 ohms? **Yes** REPAIR the high resistance circuit. For additional information, refer to the wiring diagrams. Test the system for normal operation. **No** GO to K2.
K2: CHECK THE IC TO BPM SCP + CIRCUIT FOR SHORT CIRCUIT TO BATTERY	
	1 Measure the voltage between FC25, pin 13 (Y) and GROUND.
	Is the voltage greater than 3 volts? **Yes** REPAIR the short circuit. For additional information, refer to the wiring diagrams. Test the system for normal operation. **No** GO to K3.
K3: CHECK THE IC TO BPM SCP + CIRCUIT FOR SHORT CIRCUIT TO IGNITION +	
	1 Turn the ignition switch to the ON position.
	2 Measure the voltage between FC25, pin 13 (Y) and GROUND.

	Is the voltage greater than 3 volts? **Yes** REPAIR the short circuit. For additional information, refer to the wiring diagrams. Test the system for normal operation. **No** GO to K4.
K4: CHECK THE IC TO BPM SCP + CIRCUIT FOR SHORT CIRCUIT TO GROUND	
	1 Turn the ignition switch to the OFF position.
	2 Measure the resistance between FC25, pin 13 (Y) and GROUND.
	Is the resistance less than 10,000 ohms? **Yes** REPAIR the short circuit. For additional information, refer to the wiring diagrams. Test the system for normal operation. **No** GO to K5.
K5: CHECK THE IC TO BPM SCP - CIRCUIT FOR HIGH RESISTANCE	
	1 Measure the resistance between FC25, pin 14 (U) and FC14, pin 84 (U).
	Is the resistance greater than 5 ohms? **Yes** REPAIR the high resistance circuit. For additional information, refer to the wiring diagrams. Test the system for normal operation. **No** GO to K6.
K6: CHECK THE IC TO BPM SCP - CIRCUIT FOR SHORT CIRCUIT TO BATTERY	
	1 Measure the voltage between FC25, pin 14 (U) and GROUND.
	Is the voltage greater than 3 volts? **Yes** REPAIR the short circuit. For additional information, refer to the wiring diagrams. Test the system for normal operation. **No** GO to K7.
K7: CHECK THE IC TO BPM SCP - CIRCUIT FOR SHORT CIRCUIT TO IGNITION +	
	1 Turn the ignition switch to the ON position.
	2 Measure the voltage between FC25, pin 14 (U) and GROUND.
	Is the voltage greater than 3 volts? **Yes** REPAIR the short circuit. For additional information, refer to the wiring diagrams. Test the system for normal operation. **No** GO to K8.
K8: CHECK THE IC TO BPM SCP - CIRCUIT FOR SHORT CIRCUIT TO GROUND	
	1 Turn the ignition switch to the OFF position.
	2 Measure the resistance between FC25, pin 14 (U) and GROUND.
	Is the resistance less than 10,000 ohms? **Yes** REPAIR the short circuit. For additional information, refer to the wiring diagrams. Test the system for normal operation. **No** Carry out the CAN and SCP network tests, GO to Pinpoint Test A. GO to Pinpoint Test B. GO to Pinpoint Test C.

PINPOINT TEST L : DTC U1041 DDCM; VEHICLE SPEED SCP MESSAGE INVALID	
TEST CONDITIONS	**DETAILS/RESULTS/ACTIONS**
L1: CHECK THE IC TO DDCM SCP + CIRCUIT FOR HIGH RESISTANCE	
	1 Disconnect the IC electrical connnector, FC25.
	2 Disconnect the DDCM electrical connector, DD10.
	3 Measure the resistance between FC25, pin 13 (Y) and DD10, pin 16 (Y).
	Is the resistance greater than 5 ohms? **Yes** REPAIR the high resistance circuit. For additional information, refer to the wiring diagrams. Test the system for normal operation. **No** GO to L2.
L2: CHECK THE IC TO DDCM SCP + CIRCUIT FOR SHORT CIRCUIT TO BATTERY	
	1 Measure the voltage between FC25, pin 13 (Y) and GROUND.
	Is the voltage greater than 3 volts? **Yes** REPAIR the short circuit. For additional information, refer to the wiring diagrams. Test the system for normal operation. **No** GO to L3.
L3: CHECK THE IC TO DDCM SCP + CIRCUIT FOR SHORT CIRCUIT TO IGNITION +	
	1 Turn the ignition switch to the ON position.
	2 Measure the voltage between FC25, pin 13 (Y) and GROUND.
	Is the voltage greater than 3 volts? **Yes** REPAIR the short circuit. For additional information, refer to the wiring diagrams. Test the system for normal operation. **No** GO to L4.
L4: CHECK THE IC TO DDCM SCP + CIRCUIT FOR SHORT CIRCUIT TO GROUND	
	1 Measure the resistance between FC25, pin 13 (Y) and GROUND.
	Is the resistance less than 10,000 ohms? **Yes** REPAIR the short circuit. For additional information, refer to the wiring diagrams. Test the system for normal operation. **No**

	GO to L5.
L5: CHECK THE IC TO DDCM SCP - CIRCUIT FOR HIGH RESISTANCE	
	1 Measure the resistance between FC25, pin 14 (U) and DD10, pin 09 (U).
	Is the resistance greater than 5 ohms? **Yes** REPAIR the high resistance circuit. For additional information, refer to the wiring diagrams. Test the system for normal operation. **No** GO to L6.
L6: CHECK THE IC TO DDCM SCP - CIRCUIT FOR SHORT CIRCUIT TO BATTERY	
	1 Measure the voltage between FC25, pin 13 (Y) and GROUND.
	Is the voltage greater than 3 volts? **Yes** REPAIR the short circuit. For additional information, refer to the wiring diagrams. Test the system for normal operation. **No** GO to L7.
L7: CHECK THE IC TO DDCM SCP - CIRCUIT FOR SHORT CIRCUIT TO IGNITION +	
	1 Turn the ignition switch to the ON position.
	2 Measure the voltage between FC25, pin 13 (Y) and GROUND.
	Is the voltage greater than 3 volts? **Yes** REPAIR the short circuit. For additional information, refer to the wiring diagrams. Test the system for normal operation. **No** GO to L8.
L8: CHECK THE IC TO DDCM SCP - CIRCUIT FOR SHORT CIRCUIT TO GROUND	
	1 Measure the resistance between FC25, pin 13 (Y) and GROUND.
	Is the resistance less than 10,000 ohms? **Yes** REPAIR the short circuit. For additional information, refer to the wiring diagrams. Test the system for normal operation. **No** Carry out the CAN and SCP network tests, GO to Pinpoint Test A. GO to Pinpoint Test B. GO to Pinpoint Test C.

PINPOINT TEST M : DTC U1041 (SLCM); VEHICLE SPEED SCP MESSAGE INVALID	
TEST CONDITIONS	**DETAILS/RESULTS/ACTIONS**
M1: CHECK THE IC TO SLCM SCP + CIRCUIT FOR HIGH RESISTANCE	
	1 Disconnect the IC electrical connnector, FC25.
	2 Disconnect the SLCM electrical connector, BT40.
	3 Measure the resistance between FC25, pin 13 (Y) and BT40, pin 08 (Y).
	Is the resistance greater than 5 ohms? **Yes** REPAIR the high resistance circuit. For additional information, refer to the wiring diagrams. Test the system for normal operation. **No** GO to M2.
M2: CHECK THE IC TO SLCM SCP + CIRCUIT FOR SHORT CIRCUIT TO BATTERY	
	1 Measure the voltage between FC25, pin 13 (Y) and GROUND.
	Is the voltage greater than 3 volts? **Yes** REPAIR the short circuit. For additional information, refer to the wiring diagrams. Test the system for normal operation. **No** GO to M3.
M3: CHECK THE IC TO SLCM SCP + CIRCUIT FOR SHORT CIRCUIT TO IGNITION +	
	1 Turn the ignition switch to the ON position.
	2 Measure the voltage between FC25, pin 13 (Y) and GROUND.
	Is the voltage greater than 3 volts? **Yes** REPAIR the short circuit. For additional information, refer to the wiring diagrams. Test the system for normal operation. **No** GO to M4.
M4: CHECK THE IC TO SLCM SCP + CIRCUIT FOR SHORT CIRCUIT TO GROUND	
	1 Measure the resistance between FC25, pin 13 (Y) and GROUND.
	Is the resistance less than 10,000 ohms? **Yes** REPAIR the short circuit. For additional information, refer to the wiring diagrams. Test the system for normal operation. **No** GO to M5.
M5: CHECK THE IC TO SLCM SCP - CIRCUIT FOR HIGH RESISTANCE	
	1 Measure the resistance between FC25, pin 14 (U) and BT40, pin 16 (U).
	Is the resistance greater than 5 ohms? **Yes** REPAIR the high resistance circuit. For additional information, refer to the wiring diagrams. Test the system for normal operation. **No** GO to M6.
M6: CHECK THE IC TO SLCM SCP - CIRCUIT FOR SHORT CIRCUIT TO BATTERY	
	1 Measure the voltage between FC25, pin 14 (U) and GROUND.

	Is the voltage greater than 3 volts? **Yes** REPAIR the short circuit. For additional information, refer to the wiring diagrams. Test the system for normal operation. **No** GO to M7.
M7: CHECK THE IC TO SLCM SCP - CIRCUIT FOR SHORT CIRCUIT TO IGNITION +	
	1 Turn the ignition switch to the ON position.
	2 Measure the voltage between FC25, pin 14 (U) and GROUND.
	Is the voltage greater than 3 volts? **Yes** REPAIR the short circuit. For additional information, refer to the wiring diagrams. Test the system for normal operation. **No** GO to M8.
M8: CHECK THE IC TO SLCM SCP - CIRCUIT FOR SHORT CIRCUIT TO GROUND	
	1 Measure the resistance between FC25, pin 14 (U) and GROUND.
	Is the resistance less than 10,000 ohms? **Yes** REPAIR the short circuit. For additional information, refer to the wiring diagrams. Test the system for normal operation. **No** Carry out the CAN and SCP network tests, GO to Pinpoint Test A. GO to Pinpoint Test B. GO to Pinpoint Test C.

PINPOINT TEST N : DTC U1135 (DDCM, DSCM, PDCM, PSCM, SLCM); IGNITION STATUS (IGNITION SWITCH POSITION) NOT OBTAINED	
TEST CONDITIONS	**DETAILS/RESULTS/ACTIONS**
N1: CHECK THE IGNITION SWITCH TO BPM CIRCUIT FOR HIGH RESISTANCE (KEY IN)	
	1 Make sure the ignition key is in the barrel, but that the ignition is not switched on.
	2 Disconnect the BPM electrical connector, FC14.
	3 Measure the resistance between FC14, pin 41 (O) and GROUND.
	Is the resistance greater than 5 ohms? **Yes** REPAIR the high resistance circuit. This circuit includes the ignition switch. For additional information, refer to the wiring diagrams. Test the system for normal operation. **No** GO to N2.
N2: CHECK THE IGNITION SWITCH TO BPM CIRCUIT FOR HIGH RESISTANCE (ACC POSITION)	
	1 Turn the ignition switch to the ACC position.
	2 Measure the resistance between FC14, pin 32 (WR) and GROUND.
	Is the resistance greater than 5 ohms? **Yes** REPAIR the high resistance circuit. This circuit includes the ignition switch. For additional information, refer to the wiring diagrams. Test the system for normal operation. **No** GO to N3.
N3: CHECK THE IGNITION SWITCH TO BPM CIRCUIT FOR HIGH RESISTANCE (ON POSITION)	
	1 Turn the ignition switch to the ON position.
	2 Measure the resistance between FC14, pin 15 (WU) and GROUND.
	Is the resistance greater than 5 ohms? **Yes** REPAIR the high resistance circuit. This circuit includes the ignition switch. For additional information, refer to the wiring diagrams. Test the system for normal operation. **No** GO to N4.
N4: CHECK THE IGNITION SWITCH TO INERTIA SWITCH TO BPM CIRCUIT FOR HIGH RESISTANCE	
	1 Make sure the inertia switch is closed.
	2 Turn the ignition switch to the ON position.
	3 Measure the resistance between FC14, pin 33 (RG) and GROUND.
	Is the resistance greater than 5 ohms? **Yes** REPAIR the high resistance circuit. This circuit includes the ignition switch and the inertia switch. For additional information, refer to the wiring diagrams. Test the system for normal operation. **No** GO to N5.
N5: CHECK THE IGNITION SWITCH TO BPM CIRCUIT FOR HIGH RESISTANCE (CRANK POSITION)	
	1 Remove the starter relay.
	2 Turn the ignition switch to the CRANK position.
	3 Measure the resistance between FC14, pin 41 (GO) and GROUND.
	Is the resistance greater than 5 ohms? **Yes** REPAIR the high resistance circuit. This circuit includes the ignition switch. For additional information, refer to the wiring diagrams. Test the system for normal operation. **No** Check the ignition switch function, carry out the SCP network tests, GO to Pinpoint Test C.

PINPOINT TEST O : DTC U1236 (A/CCM); CONTROL PANEL TO A/CCM SERIAL COMMUNICATION CIRCUIT FAULT	
TEST CONDITIONS	**DETAILS/RESULTS/ACTIONS**
O1: CHECK THE CONTROL PANEL TO A/CCM DATA CIRCUITS FOR HIGH RESISTANCE	
	1 Disconnect the AA/CCM electrical connector, AC03.
	2 Disconnect the control panel electrical connector, FC43.
	3 Measure the resistance between AC03, pin 03 (YG) and FC43, pin 04 (YG).
	4 Measure the resistance between AC03, pin 07 (Y) and FC43, pin 03 (Y).

	Is either resistance greater than 5 ohms? **Yes** REPAIR the high resistance circuit. For additional information, refer to the wiring diagrams. Test the system for normal operation. **No** GO to O2.
O2: CHECK THE CONTROL PANEL TO A/CCM DATA CIRCUITS FOR SHORT CIRCUIT TO BATTERY	
	1 Measure the voltage between AC03, pin 03 (YG) and GROUND.
	2 Measure the voltage between AC03, pin 07 (Y) and GROUND.
	Is either voltage greater than 3 volts? **Yes** REPAIR the short circuit. For additional information, refer to the wiring diagrams. Test the system for normal operation. **No** GO to O3.
O3: CHECK THE CONTROL PANEL TO A/CCM DATA CIRCUITS FOR SHORT CIRCUIT TO IGNITION +	
	1 Turn the ignition switch to the ON position.
	2 Measure the voltage between AC03, pin 03 (YG) and GROUND.
	3 Measure the voltage between AC03, pin 07 (Y) and GROUND.
	Is either voltage greater than 3 volts? **Yes** REPAIR the short circuit. For additional information, refer to the wiring diagrams. Test the system for normal operation. **No** GO to O4.
O4: CHECK THE CONTROL PANEL TO A/CCM DATA CIRCUITS FOR SHORT CIRCUIT TO GROUND	
	1 Turn the ignition switch to the OFF position.
	2 Measure the resistance between AC03, pin 03 (YG) and GROUND.
	3 Measure the resistance between AC03, pin 07 (Y) and GROUND.
	Is either resistance less than 10,000 ohms? **Yes** REPAIR the short circuit. For additional information, refer to the wiring diagrams. Test the system for normal operation. **No** INSTALL a new control panel. REFER to Section 412-04 Control Components. Test the system for normal operation.

PINPOINT TEST P : DTC U1909 (DSCCM) LOCAL CAN NETWORK (STEERING ANGLE, SENSOR, YAW RATE, AND LATERAL ACCELERATION SENSOR) COMMUNICATIONS FAULT	
TEST CONDITIONS	**DETAILS/RESULTS/ACTIONS**
P1: CHECK THE LOCAL CAN + CIRCUIT FOR HIGH RESISTANCE	
	1 Disconnect the DSCCM module electrical connector, LF37.
	2 Disconnect the Yaw rate and lateral acceleration sensor electrical connector, FC101.
	3 Measure the resistance between LF37, pin 29 (W) and FC101, pin 02 (W).
	Is the resistance greater than 5 ohms? **Yes** REPAIR the high resistance circuit. For additional information, refer to the wiring diagrams. Test the system for normal operation. **No** GO to P2.
P2: CHECK THE LOCAL CAN + CIRCUIT FOR SHORT CIRCUIT TO BATTERY	
	1 Measure the voltage between LF37, pin 29 (W) and GROUND.
	Is the voltage greater than 3 volts? **Yes** REPAIR the short circuit. For additional information, refer to the wiring diagrams. Test the system for normal operation. **No** GO to P3.
P3: CHECK THE LOCAL CAN + CIRCUIT FOR SHORT CIRCUIT TO IGNITION +	
	1 Turn the ignition switch to the ON position.
	2 Measure the voltage between LF37, pin 29 (W) and GROUND.
	Is the voltage greater than 3 volts? **Yes** REPAIR the short circuit. For additional information, refer to the wiring diagrams. Test the system for normal operation. **No** GO to P4.
P4: CHECK THE LOCAL CAN + CIRCUIT FOR SHORT CIRCUIT TO GROUND	
	1 Turn the ignition switch to the OFF position.
	2 Measure the resistance between LF37, pin 29 (W) and GROUND.
	Is the resistance less than 10,000 ohms? **Yes** REPAIR the short circuit. For additional information, refer to the wiring diagrams. Test the system for normal operation. **No** GO to P5.
P5: CHECK THE LOCAL CAN - CIRCUIT FOR HIGH RESISTANCE	
	1 Measure the resistance between LF37, pin 25 (W) and FC101, pin 01 (W).
	Is the resistance greater than 5 ohms? **Yes** REPAIR the high resistance circuit. For additional information, refer to the wiring diagrams. Test the system for normal operation. **No** GO to P6.
P6: CHECK THE LOCAL CAN - CIRCUIT FOR SHORT CIRCUIT TO BATTERY	

	1 Measure the voltage between LF37, pin 25 (W) and GROUND.
	Is the voltage greater than 3 volts? **Yes** REPAIR the short circuit. For additional information, refer to the wiring diagrams. Test the system for normal operation. **No** GO to P7.
P7: CHECK THE LOCAL CAN - CIRCUIT FOR SHORT CIRCUIT TO IGNITION +	
	1 Turn the ignition switch to the ON position.
	2 Measure the voltage between LF37, pin 25 (W) and GROUND.
	Is the voltage greater than 3 volts? **Yes** REPAIR the short circuit. For additional information, refer to the wiring diagrams. Test the system for normal operation. **No** GO to P8.
P8: CHECK THE LOCAL CAN - CIRCUIT FOR SHORT CIRCUIT TO GROUND	
	1 Measure the resistance between LF37, pin 25 (W) and GROUND.
	Is the resistance less than 10,000 ohms? **Yes** REPAIR the short circuit. For additional information, refer to the wiring diagrams. Test the system for normal operation. **No** Contact dealer technical support for advice on possible DSCCM failure

PINPOINT TEST Q : DTC U2012 (BPM); KEY TRANSPONDER MODULE MESSAGE CORRUPT	
TEST CONDITIONS	**DETAILS/RESULTS/ACTIONS**
Q1: CHECK THE KTM TO BPM DATA CIRCUIT FOR HIGH RESISTANCE	
	1 Disconnect the KTM electrical connector, FC22.
	2 Disconnect the BPM electrical connector, FC14.
	3 Measure the resistance between FC22, pin 17 (WR) and FC14, pin 73 (WR).
	Is the resistance greater than 5 ohms? **Yes** REPAIR the high resistance circuit. For additional information, refer to the wiring diagrams. Test the system for normal operation. **No** GO to Q2.
Q2: CHECK THE KTM TO BPM DATA CIRCUIT FOR SHORT CIRCUIT TO BATTERY	
	1 Measure the voltage between FC22, pin 17 (WR) and GROUND.
	Is the voltage greater than 3 volts? **Yes** REPAIR the short circuit. For additional information, refer to the wiring diagrams. Test the system for normal operation. **No** GO to Q3.
Q3: CHECK THE KTM TO BPM DATA CIRCUIT FOR SHORT CIRCUIT TO IGNITION +	
	1 Turn the ignition switch to the ON position.
	2 Measure the voltage between FC22, pin 17 (WR) and GROUND.
	Is the voltage greater than 3 volts? **Yes** REPAIR the short circuit. For additional information, refer to the wiring diagrams. Test the system for normal operation. **No** GO to Q4.
Q4: CHECK THE KTM TO BPM DATA CIRCUIT FOR SHORT CIRCUIT TO GROUND	
	1 Measure the resistance between FC22, pin 17 (WR) and GROUND.
	Is the resistance less than 10,000 ohms? **Yes** REPAIR the short circuit. For additional information, refer to the wiring diagrams. Test the system for normal operation. **No** Contact dealer technical support for advice on possible KTM failure

PINPOINT TEST R : BPM POWER SUPPLY OR GROUND FAULT	
TEST CONDITIONS	**DETAILS/RESULTS/ACTIONS**
R1: CHECK THE PERMANENT SUPPLY TO THE BPM	
	1 Disconnect the BPM electrical connector, FC14.
	2 Measure the voltage between FC14, pin 80 (N) and GROUND.
	Is the voltage less than 10 volts? **Yes** REPAIR the circuit between the BPM and battery. This circuit includes the driver side fuse box, (fuse 5) and the high power protection module. For additional information, refer to the wiring diagrams. Test the system for normal operation. **No** GO to R2.
R2: CHECK THE PERMANENT GROUND TO THE BPM	
	1 Measure the resistance between the BPM casing and GROUND.
	Is the resistance greater than 5 ohms? **Yes** Rectify the faulty GROUND contact. Test the system for normal operation. **No** Check for DTCs indicating a faulty circuit. Contact dealer technical support for advice on possible BPM failure

PINPOINT TEST S : SLCM POWER SUPPLY OR GROUND FAULT

TEST CONDITIONS	DETAILS/RESULTS/ACTIONS
S1: CHECK THE PERMANENT SUPPLY TO THE SLCM	
	1 Disconnect the SLCM electrical connector, BT40.
	2 Measure the voltage between BT40, pin 15 (NW) and GROUND.
	Is the voltage less than 10 volts? **Yes** REPAIR the circuit between the SLCM and battery. This circuit includes the rear power distribution box, (fuse 10) and the high power protection module. For additional information, refer to the wiring diagrams. Test the system for normal operation. **No** GO to S2.
S2: CHECK THE PERMANENT GROUND TO THE SLCM	
	1 Measure the resistance between BT40, pin 13 (BK) and GROUND.
	2 Measure the resistance between BT40, pin 14 (BK) and GROUND.
	Is either resistance greater than 5 ohms? **Yes** REPAIR the high resistance circuit. For additional information, refer to the wiring diagrams. Test the system for normal operation. **No** Check for DTCs indicating a faulty circuit. Contact dealer technical support for advice on possible SLCM failure

PINPOINT TEST T : PDCM POWER SUPPLY OR GROUND FAULT

TEST CONDITIONS	DETAILS/RESULTS/ACTIONS
T1: CHECK THE PERMANENT SUPPLY TO THE PDCM	
	1 Disconnect the PDCM electrical connector, DP10.
	2 Measure the voltage between DP10, pin 01 (N) and GROUND.
	Is the voltage less than 10 volts? **Yes** REPAIR the circuit between the PDCM and battery. This circuit includes the passenger side fuse box, (fuse 15) and the high power protection module. For additional information, refer to the wiring diagrams. Test the system for normal operation. **No** GO to T2.
T2: CHECK THE PERMANENT GROUND TO THE PDCM	
	1 Measure the resistance between DP10, pin 08 (BK) and GROUND.
	2 Measure the resistance between DP10, pin 17 (B) and GROUND.
	Is either resistance greater than 5 ohms? **Yes** REPAIR the high resistance circuit. For additional information, refer to the wiring diagrams. Test the system for normal operation. **No** Check for DTCs indicating a faulty circuit. Contact dealer technical support for advice on possible PDCM failure

PINPOINT TEST U : DDCM POWER SUPPLY OR GROUND FAULT

TEST CONDITIONS	DETAILS/RESULTS/ACTIONS
U1: CHECK THE PERMANENT SUPPLY TO THE DDCM	
	1 Disconnect the DDCM electrical connector, DD10.
	2 Measure the voltage between DD10, pin 01 (N) and GROUND.
	Is the voltage less than 10 volts? **Yes** REPAIR the circuit between the DDCM and battery. This circuit includes the driver side fuse box, (fuse 15) and the high power protection module. For additional information, refer to the wiring diagrams. Test the system for normal operation. **No** GO to U2.
U2: CHECK THE PERMANENT GROUND TO THE DDCM	
	1 Measure the resistance between DD10, pin 08 (BK) and GROUND.
	2 Measure the resistance between DD10, pin 17 (B) and GROUND.
	Is either resistance greater than 5 ohms? **Yes** REPAIR the high resistance circuit. For additional information, refer to the wiring diagrams. Test the system for normal operation. **No** Check for DTCs indicating a faulty circuit. Contact dealer technical support for advice on possible DDCM failure

PINPOINT TEST V : PHRCM POWER SUPPLY OR GROUND FAULT

TEST CONDITIONS	DETAILS/RESULTS/ACTIONS
V1: CHECK THE PERMANENT SUPPLY TO THE PHRCM	
	1 Disconnect the PHRCM electrical connector, SP22.
	2 Measure the voltage between SP22, pin 01 (N) and GROUND.
	Is the voltage less than 10 volts? **Yes** REPAIR the circuit between the PHRCM and battery. This circuit includes the passenger side fuse box, (fuse 08) and the high power protection module. For additional information, refer to the wiring diagrams. Test the system for normal operation. **No** GO to V2.
V2: CHECK THE PERMANENT GROUND TO THE PHRCM	
	1 Measure the resistance between SP22, pin 06 (G) and GROUND.

	Is the resistance greater than 5 ohms? **Yes** REPAIR the high resistance circuit. For additional information, refer to the wiring diagrams. Test the system for normal operation. **No** Check for DTCs indicating a faulty circuit. Contact dealer technical support for advice on possible DDCM failure

PINPOINT TEST W : PSCM POWER SUPPLY FAULT	
TEST CONDITIONS	**DETAILS/RESULTS/ACTIONS**
W1: CHECK THE PERMANENT SUPPLY TO THE PSCM	
	1 Disconnect the PSCM electrical connector, SP05.
	2 Measure the voltage between SP05, pin 05 (NR) and GROUND.
	Is the voltage less than 10 volts? **Yes** REPAIR the circuit between the PSCM and battery. This circuit includes the passenger side fuse box, (fuse 01) and the high power protection module. For additional information, refer to the wiring diagrams. Test the system for normal operation. **No** Check for DTCs indicating a faulty circuit. Contact dealer technical support for advice on possible PSCM failure

PINPOINT TEST X : DSCM POWER SUPPLY FAULT	
TEST CONDITIONS	**DETAILS/RESULTS/ACTIONS**
X1: CHECK THE PERMANENT SUPPLY TO THE DSCM	
	1 Disconnect the DSCM electrical connector, SD05.
	2 Measure the voltage between SD05, pin 05 (NR) and GROUND.
	Is the voltage less than 10 volts? **Yes** REPAIR the circuit between the DSCM and battery. This circuit includes the driver side fuse box, (fuse 01) and the high power protection module. For additional information, refer to the wiring diagrams. Test the system for normal operation. **No** Check for DTCs indicating a faulty circuit. Contact dealer technical support for advice on possible PSCM failure

PINPOINT TEST Y : DHRCM POWER SUPPLY OR GROUND FAULT	
TEST CONDITIONS	**DETAILS/RESULTS/ACTIONS**
Y1: CHECK THE PERMANENT SUPPLY TO THE DHRCM	
	1 Disconnect the DHRCM electrical connector, SD22.
	2 Measure the voltage between SD22, pin 01 (N) and GROUND.
	Is the voltage less than 10 volts? **Yes** REPAIR the circuit between the DHRCM and battery. This circuit includes the driver side fuse box, (fuse 08) and the high power protection module. For additional information, refer to the wiring diagrams. Test the system for normal operation. **No** GO to Y2.
Y2: CHECK THE PERMANENT GROUND TO THE DHRCM	
	1 Measure the resistance between SD22, pin 06 (G) and GROUND.
	Is the resistance greater than 5 ohms? **Yes** REPAIR the high resistance circuit. For additional information, refer to the wiring diagrams. Test the system for normal operation. **No** Check for DTCs indicating a faulty circuit. Contact dealer technical support for advice on possible DHRCM failure

PINPOINT TEST Z : MAJOR IC POWER SUPPLY OR GROUND FAULT	
TEST CONDITIONS	**DETAILS/RESULTS/ACTIONS**
Z1: CHECK THE PERMANENT SUPPLY TO THE MAJOR IC	
	1 Disconnect the IC electrical connector, FC25.
	2 Measure the voltage between FC25, pin 15 (R) and GROUND.
	Is the voltage less than 10 volts? **Yes** REPAIR the circuit between the IC and battery. This circuit includes the driver side fuse box, (fuse 04) and the high power protection module. For additional information, refer to the wiring diagrams. Test the system for normal operation. **No** GO to Z2.
Z2: CHECK THE IGNITION SWITCHED SUPPLY TO THE MAJOR IC	
	1 Turn the ignition switch to the ON position.
	2 Measure the voltage between FC25, pin 01 (WG) and GROUND.
	Is the voltage less than 10 volts? **Yes** REPAIR the circuit between the IC and battery. This circuit includes the driver side fuse box, (fuse 14) the ignition positive relay, and the high power protection module. For additional information, refer to the wiring diagrams. Test the system for normal operation. **No** GO to Z3.
Z3: CHECK THE PERMANENT GROUND TO THE MAJOR IC	
	1 Measure the resistance between FC25, pin 04 (BK) and GROUND.
	2 Measure the resistance between FC25, pin 16 (B) and GROUND.

	Is either resistance greater than 5 ohms? **Yes** REPAIR the high resistance circuit. For additional information, refer to the wiring diagrams. Test the system for normal operation. **No** Check for DTCs indicating a faulty circuit. Contact dealer technical support for advice on possible major IC failure

PINPOINT TEST AA : RCM POWER SUPPLY OR GROUND FAULT	
TEST CONDITIONS	**DETAILS/RESULTS/ACTIONS**
AA1: CHECK THE IGNITION SWITCHED SUPPLY TO THE RCM	
	1 Disconnect the RCM electrical connector, FC08.
	2 Turn the ignition switch to the ON position.
	3 Measure the voltage between FC08, pin 12 (W) and GROUND.
	Is the voltage less than 10 volts? **Yes** REPAIR the circuit between the RCM and battery. This circuit includes the driver side fuse box, (fuse 10) the ignition positive relay, and the high power protection module. For additional information, refer to the wiring diagrams. Test the system for normal operation. **No** GO to AA2.
AA2: CHECK THE PERMANENT GROUND TO THE RCM	
	1 Measure the resistance between FC08, pin 16 (BK) and GROUND.
	Is the resistance greater than 5 ohms? **Yes** REPAIR the high resistance circuit. For additional information, refer to the wiring diagrams. Test the system for normal operation. **No** Check for DTCs indicating a faulty circuit. Contact dealer technical support for advice on possible major IC failure

PINPOINT TEST AB : PACM POWER SUPPLY OR GROUND FAULT	
TEST CONDITIONS	**DETAILS/RESULTS/ACTIONS**
AB1: CHECK THE ACCESSORY SWITCHED SUPPLY TO THE PACM	
	1 Disconnect the PACM electrical connector, BT04.
	2 Turn the ignition switch to the ACC position.
	3 Measure the voltage between BT04, pin 01 (WG) and GROUND.
	Is the voltage less than 10 volts? **Yes** REPAIR the circuit between the PACM and battery. This circuit includes the rear power distribution box, (fuse 13) the accessory relay, and the high power protection module. For additional information, refer to the wiring diagrams. Test the system for normal operation. **No** GO to AB2.
AB2: CHECK THE PERMANENT GROUND TO THE PACM	
	1 Measure the resistance between BT04, pin 16 (B) and GROUND.
	Is the resistance greater than 5 ohms? **Yes** REPAIR the high resistance circuit. For additional information, refer to the wiring diagrams. Test the system for normal operation. **No** Check for DTCs indicating a faulty circuit. Contact dealer technical support for advice on possible PACM failure

PINPOINT TEST AC : ADCM POWER SUPPLY OR GROUND FAULT	
TEST CONDITIONS	**DETAILS/RESULTS/ACTIONS**
AC1: CHECK THE PERMANENT SUPPLY TO THE ADCM	
	1 Disconnect the ADCM electrical connector, BT69.
	2 Measure the voltage between BT69, pin 27 (NW) and GROUND.
	Is the voltage less than 10 volts? **Yes** REPAIR the circuit between the ADCM and battery. This circuit includes the rear power distribution box, (fuse 02) and the high power protection module. For additional information, refer to the wiring diagrams. Test the system for normal operation. **No** GO to AC2.
AC2: CHECK THE IGNITION SWITCHED SUPPLY TO THE ADCM	
	1 Turn the ignition switch to the ON position.
	2 Measure the voltage between BT69, pin 11 (WR) and GROUND.
	Is the voltage less than 10 volts? **Yes** REPAIR the circuit between the ADCM and battery. This circuit includes the rear power distribution box, (fuse 04) the ignition positive relay and the high power protection module. For additional information, refer to the wiring diagrams. Test the system for normal operation. **No** GO to AC3.
AC3: CHECK THE PERMANENT GROUND TO THE ADCM	
	1 Turn the ignition switch to the OFF position.
	2 Measure the resistance between BT69, pin 18 (B) and GROUND.
	Is the resistance greater than 5 ohms? **Yes** REPAIR the high resistance circuit. For additional information, refer to the wiring diagrams. Test the system for normal operation. **No** Check for DTCs indicating a faulty circuit. Contact dealer technical support for advice on possible ADCM failure

PINPOINT TEST AD : LEFT-HAND HID HEADLAMP POWER SUPPLY OR GROUND FAULT	
TEST CONDITIONS	**DETAILS/RESULTS/ACTIONS**
AD1: CHECK THE IGNITION SWITCHED SUPPLY TO THE LEFT-HAND HID	
	1 Disconnect the HID electrical connector, LF30.
	2 Turn the ignition switch to the ON position.
	3 Measure the voltage between LF30, pin 01 (WR) and GROUND.
	Is the voltage less than 10 volts? **Yes** REPAIR the circuit between the Left-hand HID and battery. This circuit includes the engine compartment fuse box, (fuse 03) the ignition positive relay and the high power protection module. For additional information, refer to the wiring diagrams. Test the system for normal operation. **No** GO to AD2.
AD2: CHECK THE PERMANENT GROUND TO THE LEFT-HAND HID	
	1 Turn the ignition switch to the OFF position.
	2 Measure the resistance between LF30, pin 03 (B) and GROUND.
	Is the resistance greater than 5 ohms? **Yes** REPAIR the high resistance circuit. For additional information, refer to the wiring diagrams. Test the system for normal operation. **No** Check for DTCs indicating a faulty circuit. Contact dealer technical support for advice on possible HID failure

PINPOINT TEST AE : RIGHT-HAND HID HEADLAMP POWER SUPPLY OR GROUND FAULT	
TEST CONDITIONS	**DETAILS/RESULTS/ACTIONS**
AE1: CHECK THE IGNITION SWITCHED SUPPLY TO THE RIGHT-HAND HID	
	1 Disconnect the HID electrical connector, LF23.
	2 Turn the ignition switch to the ON position.
	3 Measure the voltage between LF23, pin 01 (WR) and GROUND.
	Is the voltage less than 10 volts? **Yes** REPAIR the circuit between the Left-hand HID and battery. This circuit includes the engine compartment fuse box, (fuse 03) the ignition positive relay and the high power protection module. For additional information, refer to the wiring diagrams. Test the system for normal operation. **No** GO to AE2.
AE2: CHECK THE PERMANENT GROUND TO THE RIGHT-HAND HID	
	1 Turn the ignition switch to the OFF position.
	2 Measure the resistance between LF23, pin 03 (B) and GROUND.
	Is the resistance greater than 5 ohms? **Yes** REPAIR the high resistance circuit. For additional information, refer to the wiring diagrams. Test the system for normal operation. **No** Check for DTCs indicating a faulty circuit. Contact dealer technical support for advice on possible HID failure

PINPOINT TEST AF : KTM POWER SUPPLY OR GROUND FAULT	
TEST CONDITIONS	**DETAILS/RESULTS/ACTIONS**
AF1: CHECK THE PERMANENT SUPPLY TO THE KTM	
	1 Disconnect the KTM electrical connector, FC22.
	2 Measure the voltage between FC22, pin 04 (NR) and GROUND.
	Is the voltage less than 10 volts? **Yes** REPAIR the circuit between the KTM and battery. This circuit includes the friver side fuse box, (fuse 06) and the high power protection module. For additional information, refer to the wiring diagrams. Test the system for normal operation. **No** GO to AF2.
AF2: CHECK THE ACCESSORY SWITCHED GROUND TO THE KTM	
	1 Turn the ignition switch to the ACC position.
	2 Measure the resistance between FC22, pin 13 (WR) and GROUND.
	Is the resistance greater than 5 ohms? **Yes** REPAIR the high resistance circuit. For additional information, refer to the wiring diagrams. Test the system for normal operation. **No** GO to AF3.
AF3: CHECK THE IGNITION SWITCHED GROUND TO THE KTM	
	1 Turn the ignition switch to the ON position.
	2 Measure the resistance between FC22, pin 13 (WR) and GROUND.
	Is the resistance greater than 5 ohms? **Yes** REPAIR the high resistance circuit. For additional information, refer to the wiring diagrams. Test the system for normal operation. **No** GO to AF4.
AF4: CHECK THE PERMANENT GROUND TO THE KTM	
	1 Measure the resistance between FC22, pin 12 (BK) and GROUND.
	Is the resistance greater than 5 ohms? **Yes** REPAIR the high resistance circuit. For additional information, refer to the wiring diagrams. Test the system for normal operation. **No**

	Check for DTCs indicating a faulty circuit. Contact dealer technical support for advice on possible KTM failure

Module Communications Network - Auxiliary Junction Box (AJB)

Removal and Installation

Removal

1. Open the driver's door, or both doors if necessary, to allow the side windows to drop. Ensure that the doors remain open until after the battery has been disconnected.

2. Disconnect the battery ground cable.

- Remove the battery cover.

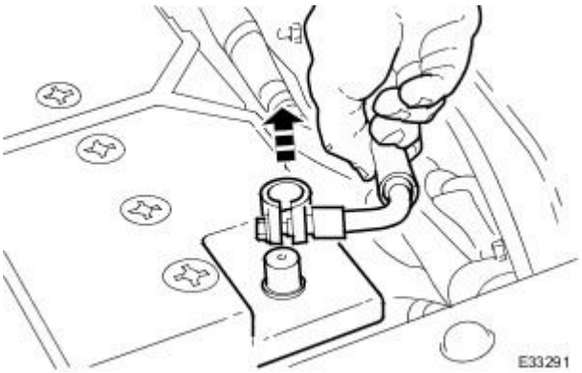

3. Open the bonnet and fit body paintwork protection sheets.

4. Remove the positive supply power cable.

1. Remove the fuse-box from the mounting panel.
1. Reposition the cover from the positive cable.
2. Remove the nut which secures the positive cable to the fuse-box.
3. Disconnect the positive power cable.

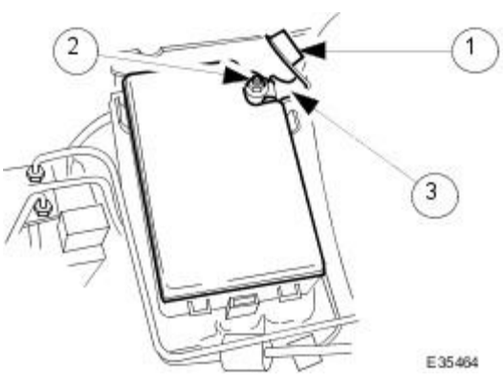

5. Remove the fuse-box from the mounting panel.

1. Release the securing latch, upwards.
    1. Reposition the fuse-box, inwards.
    2. Remove the fuse-box from the mounting panel.
2. Releases the securing tangs and remove the cover from the fuse-box.

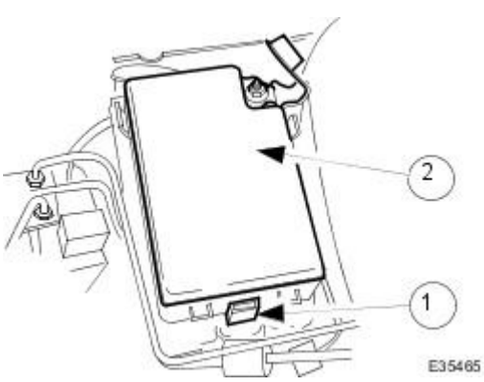

6. Remove the fuse-box.

1. Identify and disconnect the harness multi-plugs from the fuse-box. Remove the fuse-box from the vehicle.

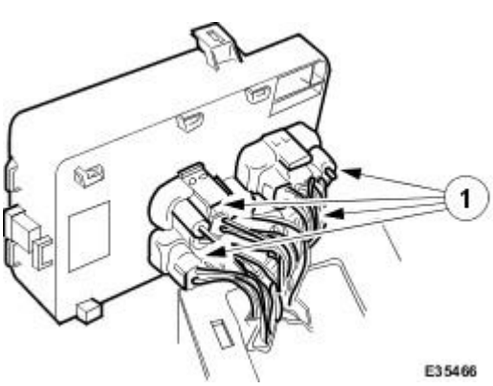

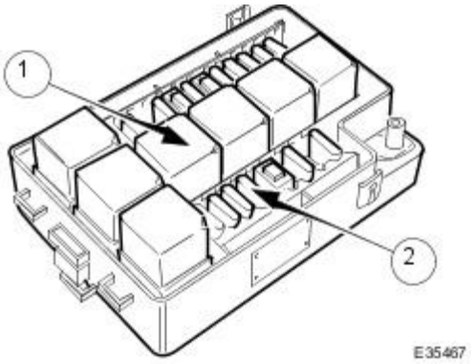

7. Remove the fuses and relays.

1. Note the position of each relay and remove them.
2. Identify each fuse and remove them. The value and position of each fuse is illustrated on the lid of the luggage compartment fuse-box - for all fuse-boxes on the vehicle.

Installation

1. Installation is the reverse of removal.

2. Perform the Battery Reconnection Procedure described in Section 414-01.

Module Communications Network - Battery Junction Box (BJB)

Removal and Installation

Removal

1. Open the driver's door, or both doors if necessary, to allow the side windows to drop. Ensure that the doors remain open until after the battery has been disconnected.

2. Disconnect the battery ground cable.

- Remove the battery cover.

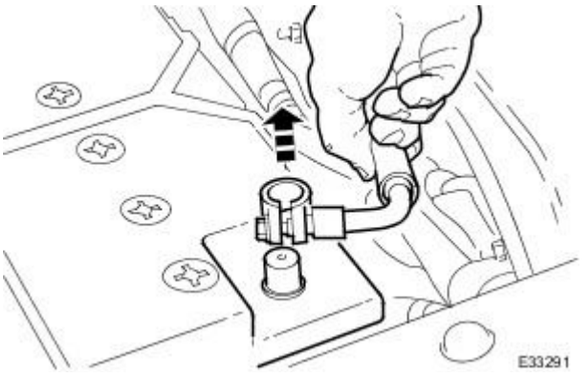

3. Remove the cover from the fuse-box.

1. Release the securing tangs of the cover.
2. Remove the cover from the fuse-box housing.

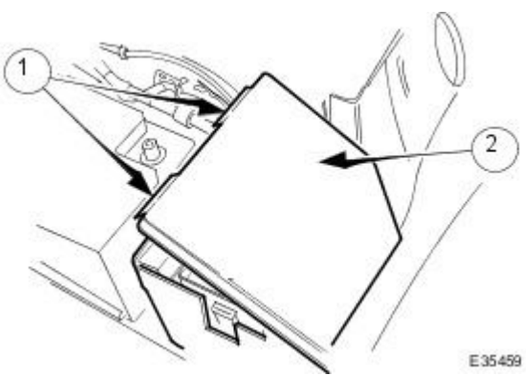

4. Remove the positive supply power cable.

1. Reposition the cover from the positive cable.
2. Remove the nut which secures the positive cable to the fuse-box.
3. Disconnect the positive power cable.

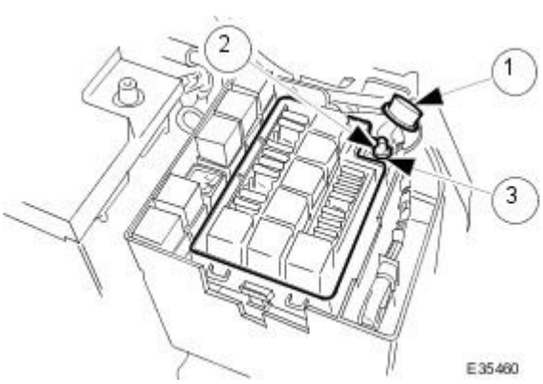

5. Remove the fuse-box from the mounting panel.

1. Release the securing latch, upwards.

- Reposition the fuse-box, inwards.
- Remove the fuse-box from the mounting panel.

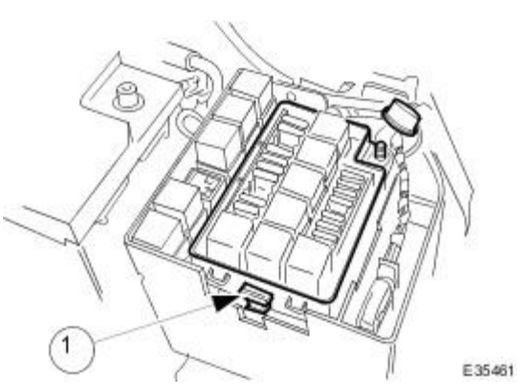

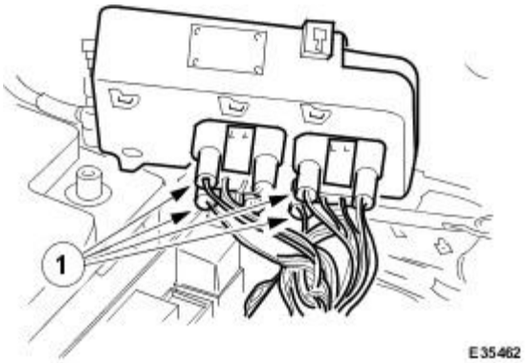

6. Remove the fuse-box.

1. Identify and disconnect the harness multi-plugs from the fuse-box. Remove the fuse-box from the vehicle.

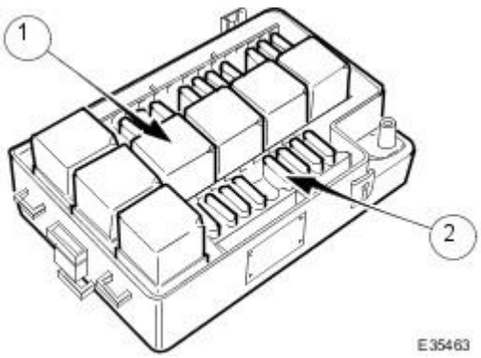

7. Remove the fuses and relays.

1. Note the position of each relay and remove them.
2. Identify each fuse and remove them. The value and position of each fuse is illustrated on the lid of the luggage compartment fuse-box - for all fuse-boxes on the vehicle.

Installation

1. Installation is the reverse of removal.

2. Perform the Battery Reconnection Procedure described in Section 414-01.

Module Communications Network - Central Junction Box (CJB) LH

Removal and Installation

Removal

1. Open the driver's door, or both doors if necessary, to allow the side windows to drop. Ensure that the doors remain open until after the battery has been disconnected.
2. Disconnect the battery ground cable.
   - Remove the battery cover.

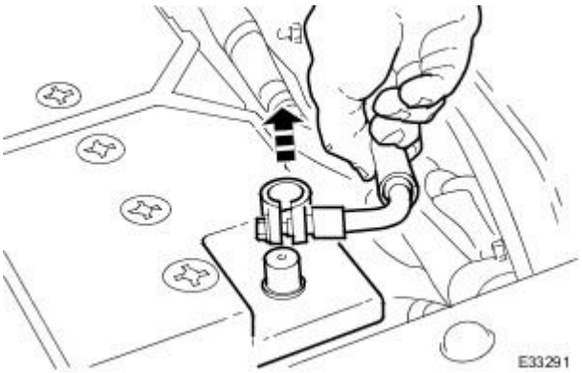

3. Remove the cover from the fuse-box.

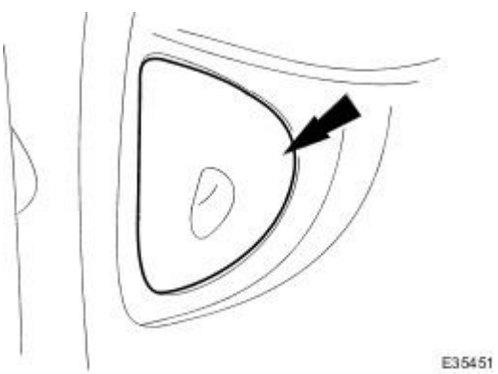

4. Remove the glovebox assembly, for access to the connectors. Refer to Section 501-12.
5. From behind the fuse-box (in the glovebox area) disconnect the harness multi-plug.
6. Remove the positive supply power cable.
   1. Remove the nut which secures the positive cable to the fuse-box.
   2. Disconnect the positive power cable.

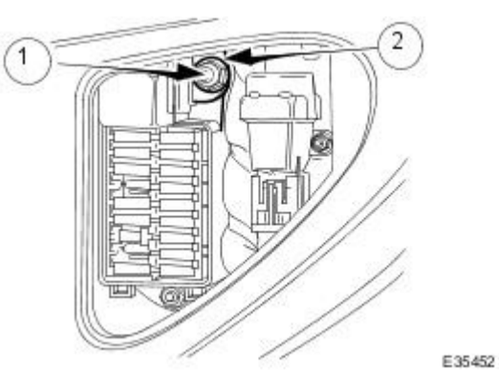

7. Remove the fuse-box.
   1. Remove the two nuts which secure the fuse-box to the fascia.
   2. Remove the fuse-box from the vehicle.

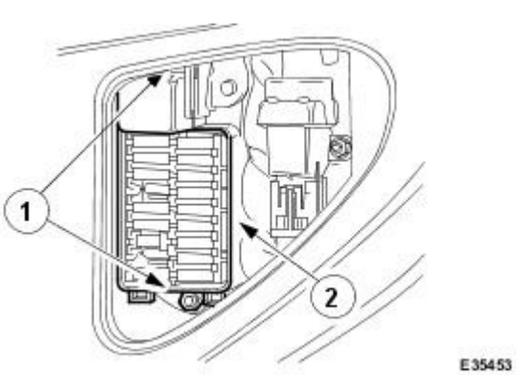

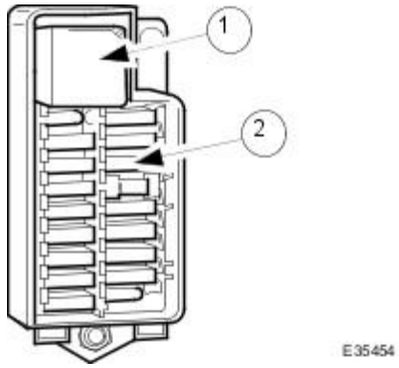

8. Remove the fuses and relay.

1. Remove the relay.
2. Identify each fuse and remove them. The value and position of each fuse is illustrated on the lid of the luggage compartment fuse-box - for all fuse-boxes on the vehicle.

Installation

1. Installation is the reverse of removal.

2. Perform the Battery Reconnection Procedure described in Section 414-01.

Module Communications Network - Central Junction Box (CJB) RH

Removal and Installation

Removal

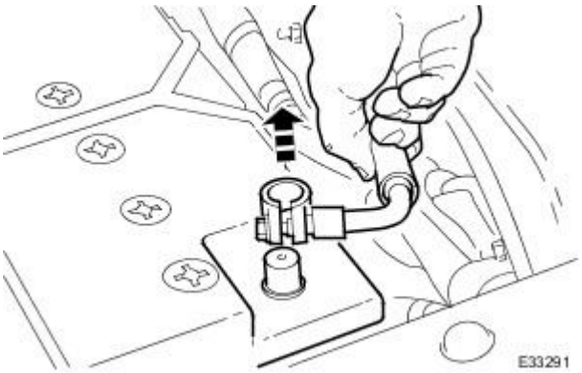

1. Open the driver's door, or both doors if necessary, to allow the side windows to drop. Ensure that the doors remain open until after the battery has been disconnected.
2. Disconnect the battery ground cable.
   - Remove the battery cover.

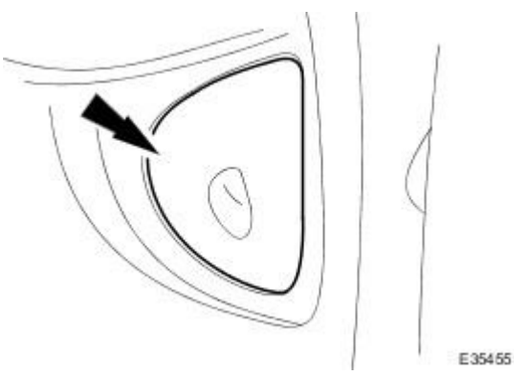

3. Remove the cover from the fuse-box.

4. Remove the underscuttle assembly, for access to the connectors. For additional information, refer to Section 501-12 Instrument Panel and Console.
5. From behind the fuse-box (in the underscuttle area) disconnect the harness multi-plug.
6. Remove the positive supply power cable.
   1. Remove the nut which secures the positive cable to the fuse-box.
   2. Disconnect the positive power cable.

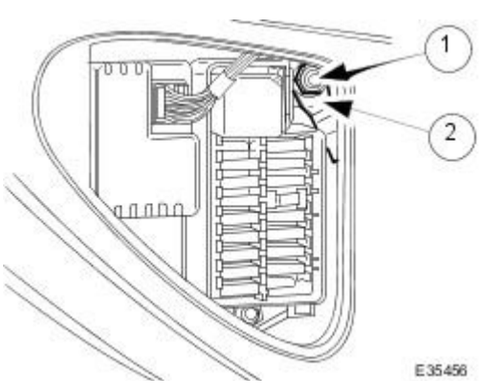

7. Remove the fuse-box.
   1. Remove the two nuts which secure the fuse-box to the fascia.
   2. Remove the fuse-box from the vehicle.

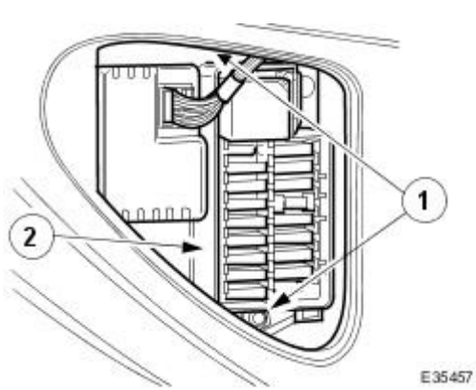

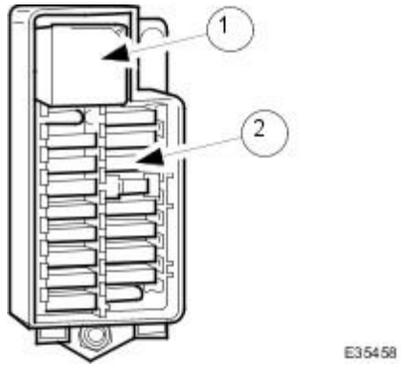

8. Remove the fuses and relay.

1. Remove the relay.
2. Identify each fuse and remove them. The value and position of each fuse is illustrated on the lid of the luggage compartment fuse-box - for all fuse-boxes on the vehicle.

Installation

1. Installation is the reverse of removal.

2. Perform the Battery Reconnection Procedure described in Section 414-01.

Published: 11-May-2011

Wiring Harnesses - Wiring Harness

Description and Operation

Introduction

CAUTION: Do **not** use any other heat shrink sleeve other than the approved glue lined heat shrink sleeve mentioned in the repair procedure.

The purpose of this document is to promote quick and efficient minor repair to harness connectors or cables using approved methods and the wiring harness repair kit. Repairs may only be made to cables and connectors which have been mechanically, **not electrically** damaged. It also applies where the whole extent of the damage can be clearly identified and rectified.

Care and neatness are essential requirements in making a perfect repair.

Caution:

At the time of this first issue of the Harness Repair Guide, do not approve repairs to any of the following circuits:

- Any media orientated system transport network harnesses.
- Supplement restraint system (SRS) firing circuits (Air bags).
- Link lead assembles, which are unique to safety critical circuits such as anti-lock brake system (ABS) and thermocouple circuits. An example of this is the ABS wheel speed sensors with moulded connectors.
- 4. Screened cables, leads and wiring harness(s).

If any harness(s) with defective electrical connector terminals or wires from the above circuits are a concern, new components must be installed.

Repair Kit

CAUTION: Where the repair procedure indicates that a glue lined heat shrink sleeve should be applied, apply sufficient heat to the glue lined heat shrink to melt the glue in order to provide a water tight seal. Do **not** over heat the glue lined heat shrink sleeve so that the wiring harness insulation becomes damaged.

The wiring harness repair kit has been produced which comprises:

- Pre-terminated wiring harness(s) of different sizes and types
- Three sizes of butt splice connectors
- A selection of colored cable identification sleeves
- Two sizes of glue lined heat shrink sleeves
- Crimping pliers
- A wire cutter and insulation stripper
- An electrical connector terminal extraction handle and tips

A suitable heat source, for shrinking heat shrink sleeves will be required.

The pre-insulated diamond grip range of electrical connector terminals and in-line, butt splice connectors contained within the wiring harness repair kit are the **only** acceptable product for the repairs of wiring harnesses. The butt connectors not only grip the wire but also the insulation, making a very secure joint.

If an electrical connector terminal is not included in the wiring harness repair kit then approval for the repair is **NOT** given and in these circumstances a new wiring harness must be installed.

Pre-Terminated Wiring Harness(s) and Butt Splice Connectors

All pre-terminated wiring harness(s) and butt splice connectors in the wiring harness repair kit are contained in bags which can be resealed after use. Each bag is marked with the part number of the items stored within the bag. Each storage compartment in the wiring harness repair kit is identified with the corresponding part number. Make sure that pre-terminated wiring harness(s) and connectors are not mixed up it is advisable to only open one bag at a time and to reseal the bag securely before opening another bag. Also, replace the bag in its mating part number compartment within the case.

The pre-terminated wiring harness(s) are supplied with the insulation in one of three colors, red, blue or yellow. The colors do not apply to any particular circuit but to the harness wire size. See the Relationship Table in the Repair Method section.

Butt splice connectors are also supplied with red, blue or yellow coverings, which must be matched to the pre-terminated wiring harness insulation color.

Pre-Terminated Wiring Harness(s)

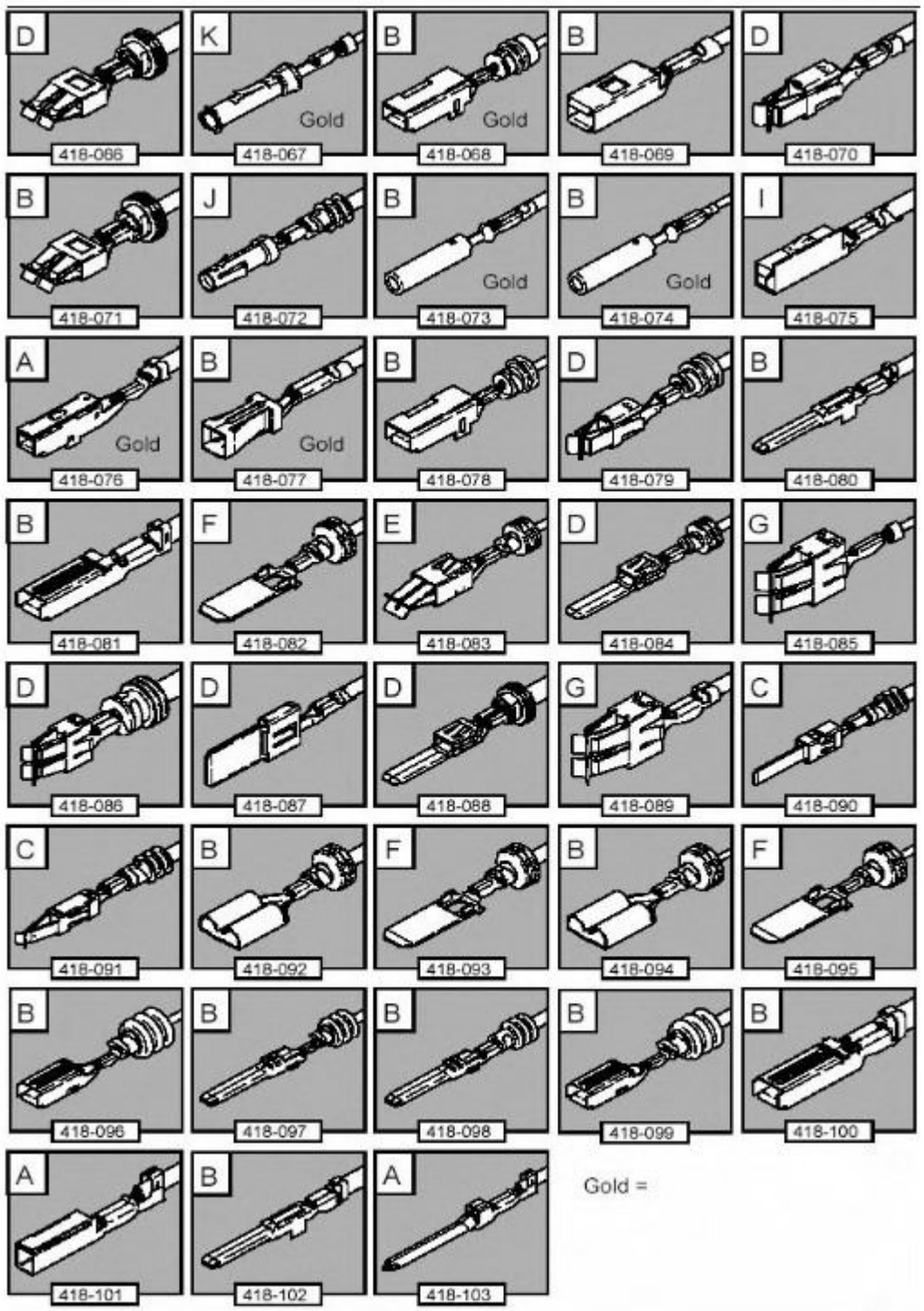

E130741

The illustration shows:

- The pre-terminated wiring harness(s) which are included in the wiring harness repair kit
- The part number of the pre-terminated wiring harness
- The letter showing the extractor tip which must be used to remove this type of electrical connector terminal
- Those electrical connector terminals which are gold

Some of the pre-terminated wiring harness(s) have seals installed to the insulation for sealed connector applications. It is essential for prevention of moisture ingress that a sealed pre-terminated wiring harness must be used where a sealed terminal was removed.

CAUTION: Where the repair procedure indicates that a glue lined heat shrink sleeve should be applied, apply sufficient heat to the glue lined heat shrink to melt the glue in order to provide a water tight seal. Do **not** over heat the glue lined heat shrink sleeve so that the wiring harness insulation becomes damaged.

Two sizes of heat shrink sleeving are supplied in the wiring harness repair kit. Each heat shrink sleeve contains a sealant glue. These must be used when connecting wiring harness(s) or electrical connector terminal(s) at all times. The smaller diameter heat shrink sleeve is to be used with the red and blue butt splice connectors and the larger diameter sleeve with the yellow butt splice connectors.

For ease and speed, some of the pre-terminated wiring harness(s) may already have the insulation partly stripped at the splice end. If the repair requires insulation to be stripped from the cable, refer to the Relationship Table for the correct length of insulation to be stripped.

The Pre-Terminated Wiring Harness(s) illustration shows the electrical connector terminal type, the part number of the pre-terminated wiring harness and the letter of the extractor tip which must be used to extract the electrical connector terminal from the connector housing. Additionally, those electrical connector terminal(s) which are gold are identified, all others are therefore, tinned and not gold.

Wiring Harness Cable Identification Sleeves

A selection of colored sleeves are contained in the wiring harness repair kit for maintaining the wiring harness cable identification on the pre-terminated wiring harness. Place the correct colored sleeve(s) over the pre-terminated wiring harness insulation as near to the electrical connector as possible with the main wiring harness cable color nearest to the electrical connector.

For example, if the original wiring harness cable color is pink with a black trace put the pink wiring harness cable identification sleeve on the pre-terminated wiring harness first followed by a black sleeve, and slide both along the wiring harness cable to the electrical connector terminal.

Extraction Handle and Tips

The extraction handle, in conjunction with the correct tip, is used to remove a terminal from an electrical connector. Each tip contained in the wiring harness repair kit is marked with an identification letter, A to K inclusive. Each tip has been specially designed to extract a particular type of electrical connector terminal. The use of any other tool is **not** recommended and is liable to cause damage to the electrical connector. The tip is fastened to the handle by a screw which holds the tip firmly yet allows it to be easily replaced.

Extraction Handle and Tips

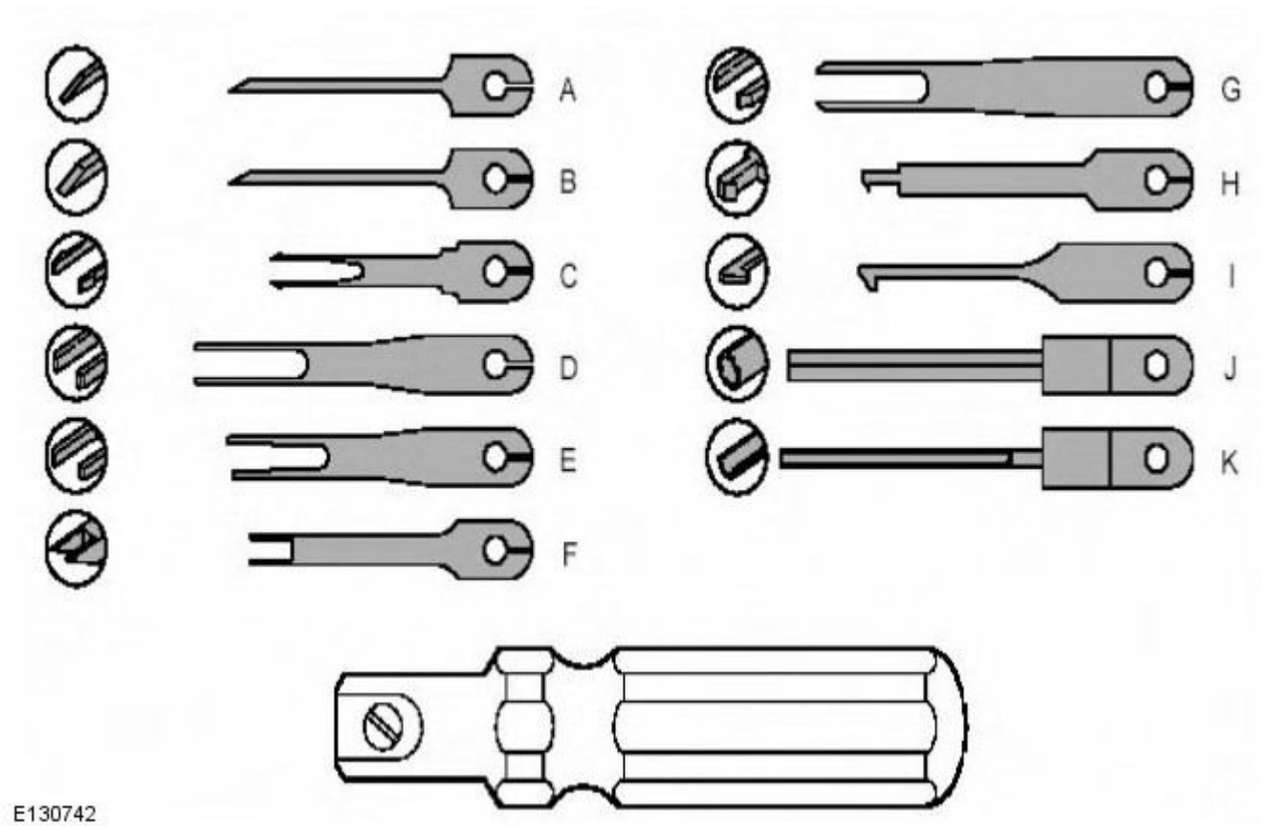

Insulation Stripper

The moving jaw has an adjuster wheel which has a series of holes in it. Turning the wheel and placing the cable in the matching size hole will automatically adjust the jaw to the correct pressure. Note that some wiring harness(s) may have a harder insulation and slight adjustment of the wheel may be needed to make a clean strip but exercise care not to damage the wire.

Insulation Stripper

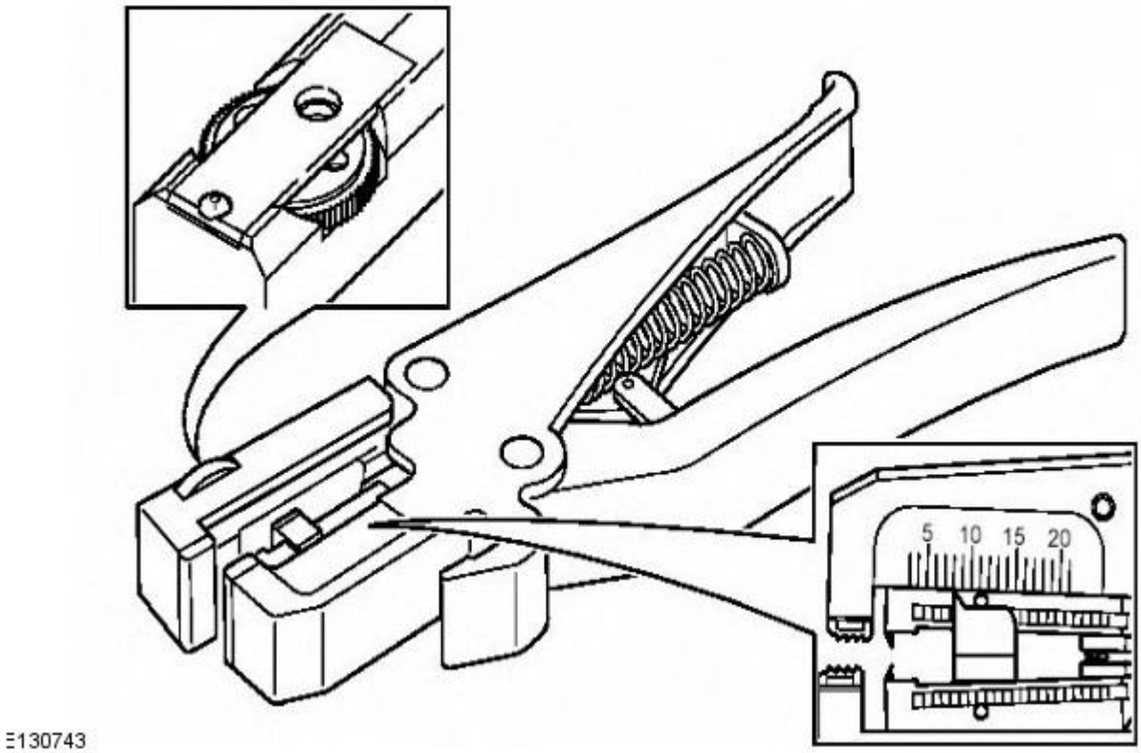

E130743

By pressing the outer edges of the wiring harness cable length stop together the adjuster can be slid up or down the jaw. This decreases or increases the length by which the wiring harness cable insulation will be stripped from the pre-terminated wiring harness or wiring harness wire. The adjuster has a position indicator to align with a graduated scale and this sets the correct length in millimetres, of insulation to be stripped. The amount of insulation to be stripped is shown in the Relationship Table.

The illustration shows the insulation stripper tool and a wiring harness correctly gripped in the jaws. A wire cutter is provided on the outer side of the fixed jaw.

Cable Correctly Gripped in Stripper Blades

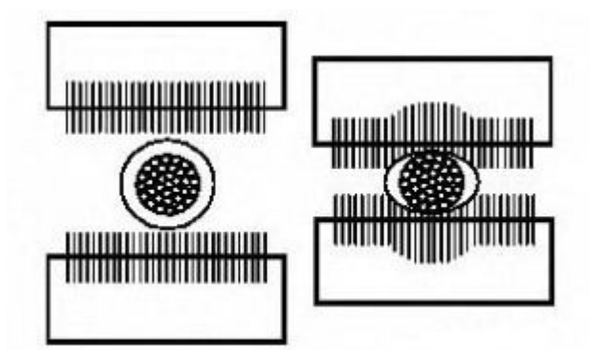
E130744

Crimping Pliers

Crimping Pliers

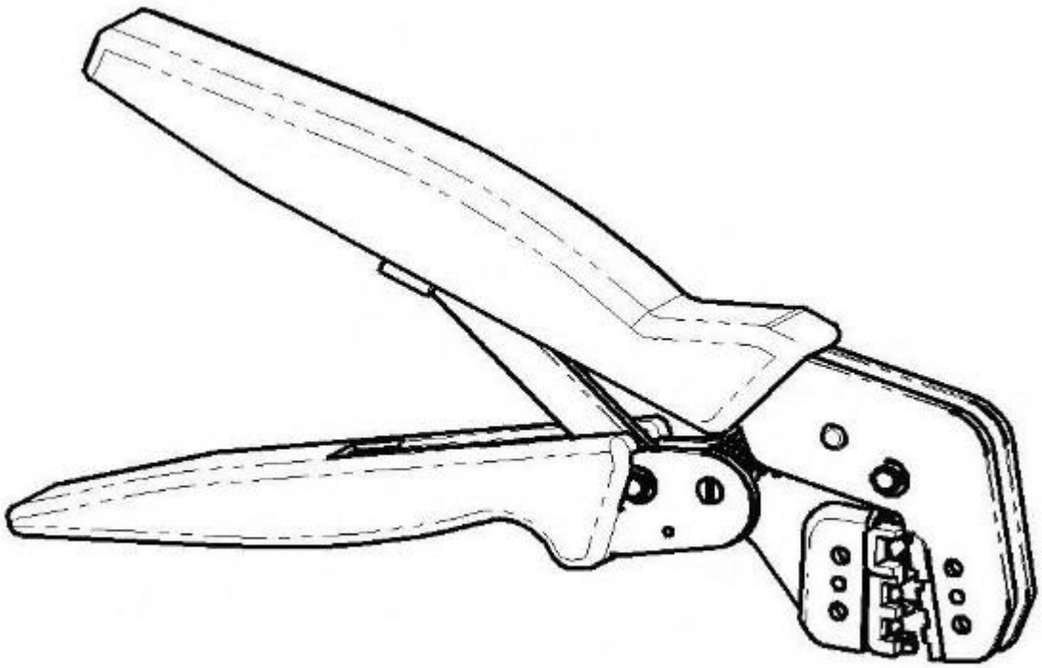

E130745

The crimping pliers have a moving jaw and a stationary jaw, with three different sized crimping enclosures. Each of the enclosures is identified by a red, blue or yellow coloured dot which corresponds to the three colours of the pre-terminated wiring harness(s) and butt splice connector colors.

List of Parts

Description	Part Number	Quantity
Wiring Harness Repair Kit	418-S065	1
Pre-Terminated Wiring Harness(s)	418-066 to 418-103 inclusive	10 each
Glue Lined Heat Shrink Pack – small diameter	418-104	25 per pack
Glue Lined Heat Shrink Pack – larger diameter	418-105	10 per pack
Case Assembly Comprising – carry case, lid, inner lid, base, insert, trays foam spacers	418-106	1
Butt Splice Connector – Red	418-107	50 per pack
Butt Splice Connector – Blue	418-108	50 per pack
Butt Splice Connector – Yellow	418-109	20 per pack
Extraction Tool Handle	418-110	1
Extraction Tip Pack consists of 2 spare screws plus	418-S111	1
Tip A	418-118	1
Tip B	418-119	1
Tip C	418-120	1
Tip D	418-121	1
Tip E	418-122	1
Tip F	418-123	1
Tip G	418-124	1
Tip H	418-125	1
Tip I	418-126	1
Tip J	418-127	1
Tip K	418-128	1
Sleeve Identification Pack – for Red insulation	418-112	500
Sleeve Identification Pack – for Blue insulation	418-113	500
Sleeve Identification Pack – for Yellow insulation	418-114	500
Instruction Manual	JTP 593	1
Crimping Pliers	YRW500010	1
Wire Stripping Tool	418-117	1

Items can be ordered from:

SPX United Kingdom Limited

Ironstone Way

Brixworth

Northants

NN6 9UD

United Kingdom

Telephone: +44 (0) 1327 704461

Fax: +44 (0) 1327 706632

Repair Methods

CAUTION: **Several different types and sizes of terminal may be found in a single electrical connector housing.**

It is necessary to identify:

- The conductor (wire) size of the affected wiring harness
- The electrical connector range from which the damaged wiring harness is to be removed
- The terminal type

Use of the approved diagnostic tool will greatly assist in the quick identification of electrical connectors and faulty pin terminal(s).

Reference can also be made to the vehicle Electrical Guides, held by Dealers, to identify wiring harness(s) and electrical connector(s).

By using the Relationship Table, the wiring harness conductor (wire) size can be related to a suitable pre-terminated wiring harness by the color of the insulation. Also, the correct length of insulation to be stripped from the wiring harness lead is identified.

Relationship Table

CABLE RANGE	SPLICE	STRIP LENGTH
0.35 mm^2 to 1.50 mm^2	RED	6.00 to 7.00 mm
1.00 mm^2 to 2.50 mm^2	BLUE	6.00 to 7.00 mm
4.00 mm^2 to 6.00 mm^2	YELLOW	9.00 to 9.50 mm

Electrical Connector Terminal Extraction

It must be noted that some electrical connector(s) have anti-backout devices which prevent the terminals from being removed from the electrical connector. Some examples of these are shown in following illustrations. The anti-backout device must be released before attempting to remove the terminal from the electrical connector. Some anti-backout devices require a special tip to release the device and these have been included in the kit. Most can be released by carefully using a suitable small screwdriver.

Various types of electrical connector have seals installed internally or externally to prevent moisture ingress. These normally do not have to be removed but make sure that they are installed when the electrical connectors are connected.

The illustrations show examples of each tip used on different types of electrical connector(s). There are a large number of different types of electrical connector used on vehicles therefore only one example using each tip is shown. Technicians experience and judgement will dictate which type of tip should be used for those electrical connector(s) which are not shown. Care should be exercised to avoid further damage when removing the terminals from the electrical connector.

• NOTE: **Examples of the extraction tips and anti-backout tips.**

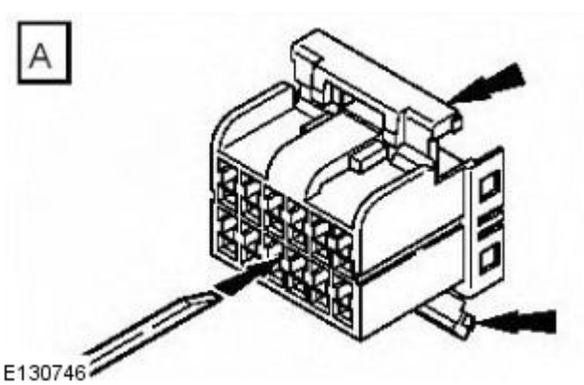

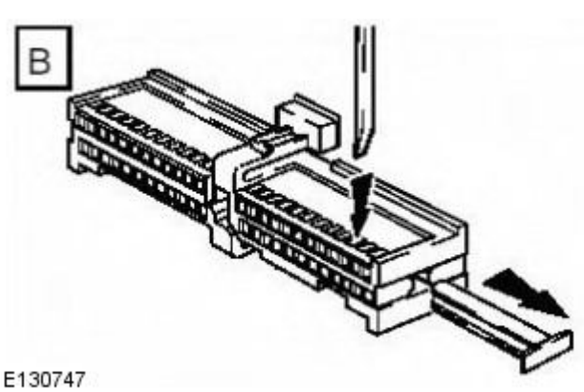

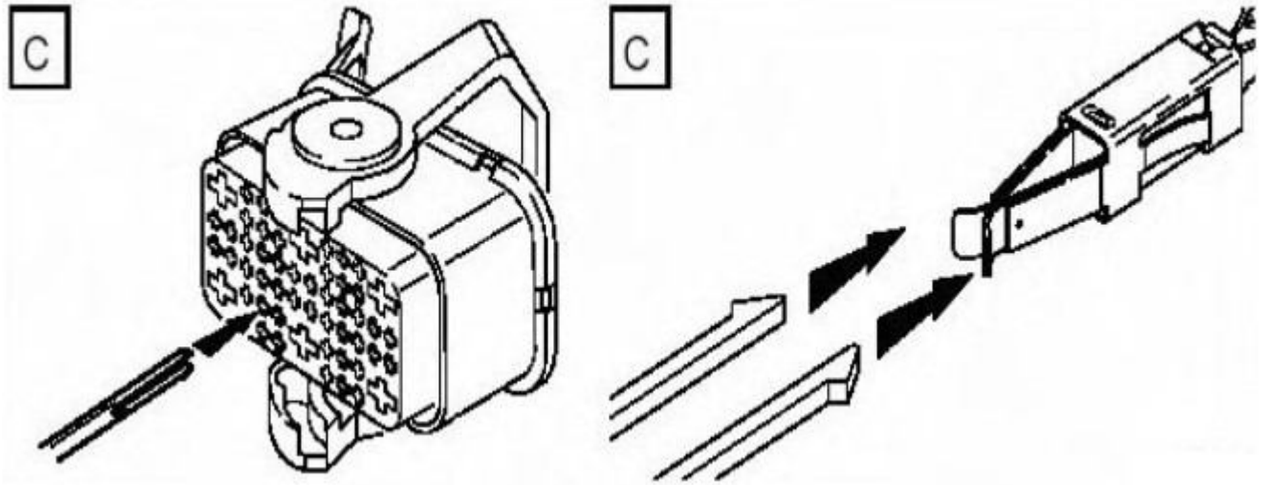

E130748

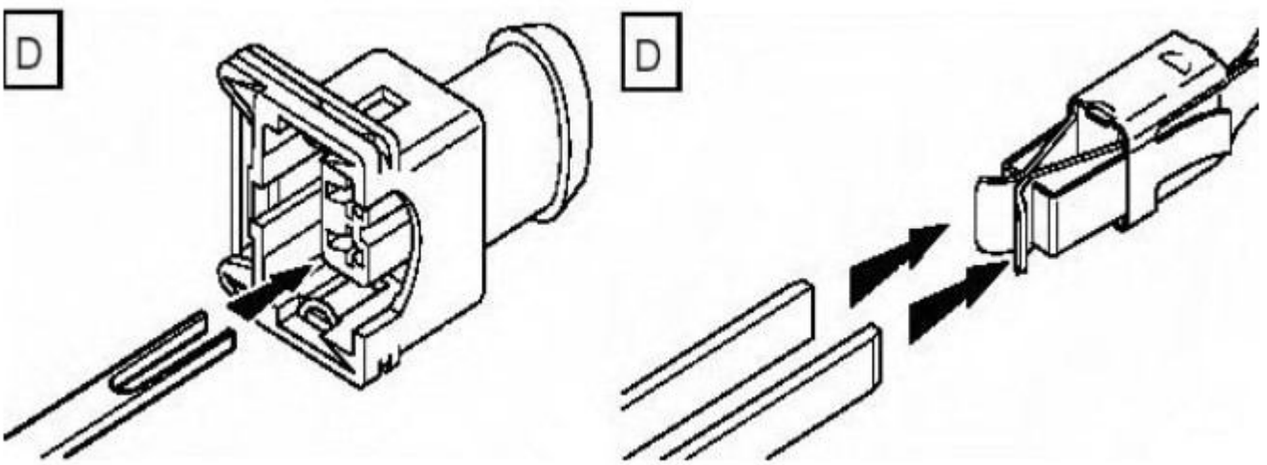

E130749

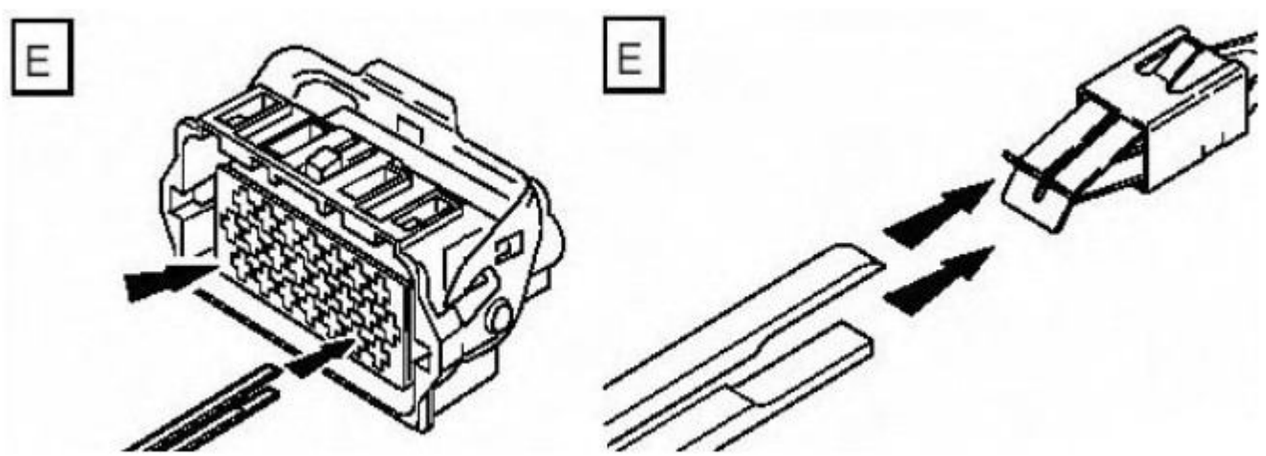

E130750

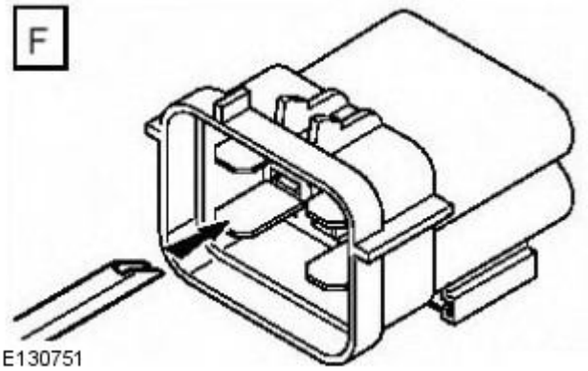

E130751

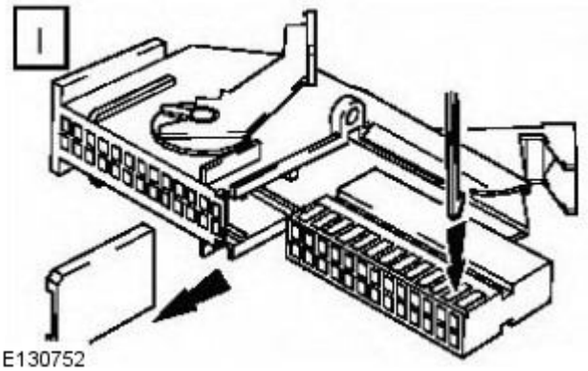

E130752

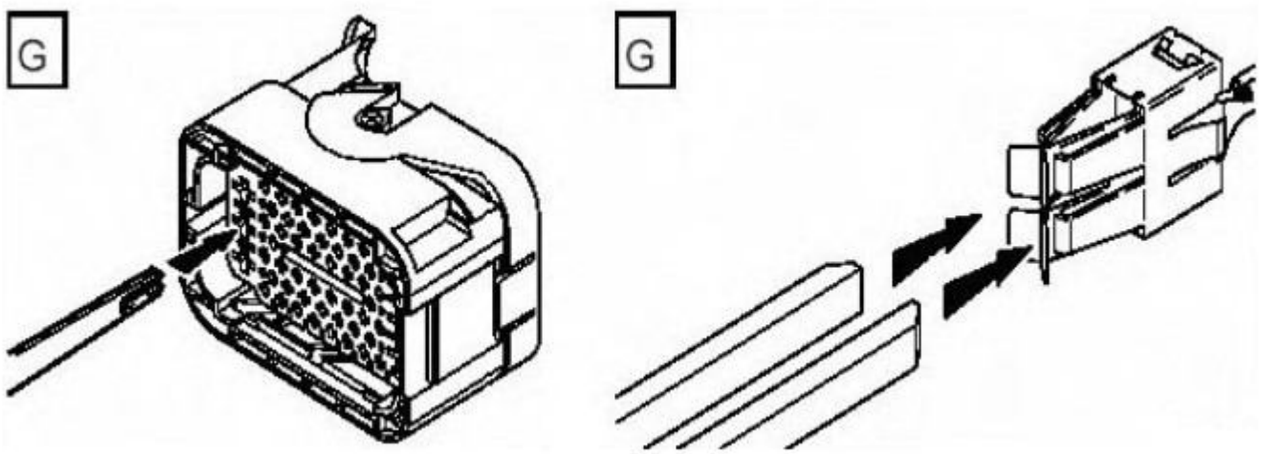

E130753

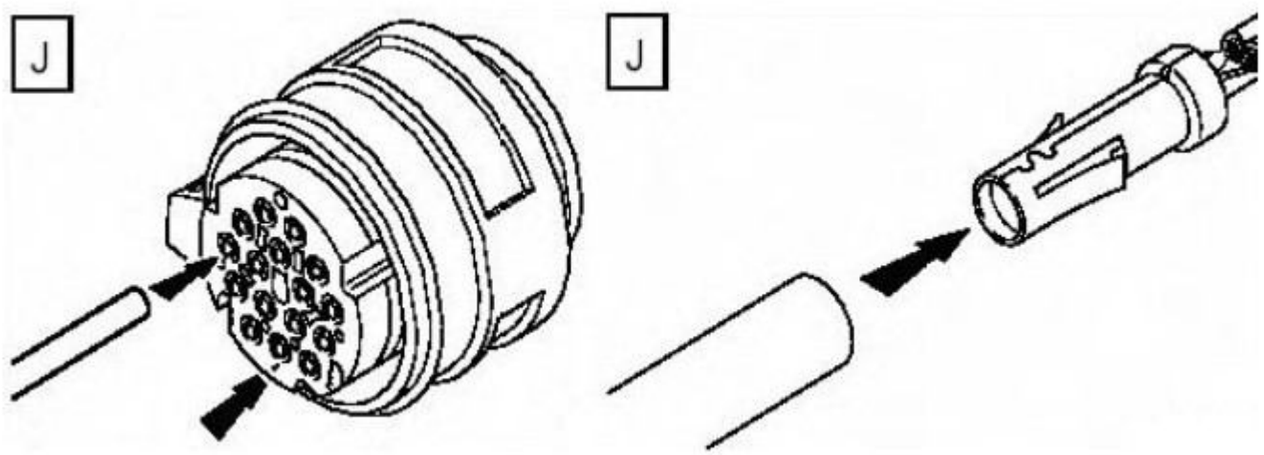

E130754

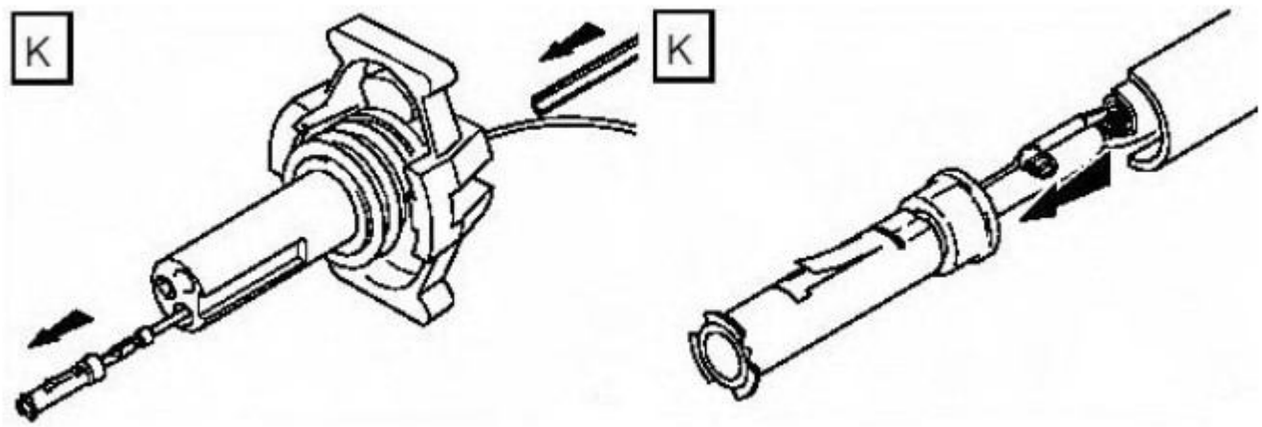

E130755

• NOTE: The chart shows the electrical connector types, terminal pins/sockets, extractor tip and anti-backout tip.

Electrical connector terminal type	Pin or socket	Extractor tip	Anti-backout tip
Mulitlock 040 series	D	A	
Mulitlock 040 series	B	A	
Mulitlock 070 series	B	B	
Mulitlock 040 series	D	B	
Econoseal III 070 series	D	B	
Econoseal III 070 series	B	B	
Econoseal III 070 series	B	B	
Econoseal III J2	D	B	
Econoseal III 250 series	B	F	
Econoseal III 250 series	D	B	
Econoseal III 250 series	B	F	
Econoseal III 250 series	D	B	
Micro-timer II 1.5mm	D	C	
Micro-timer II 1.5mm	B	C	
Std power timer 4.8 flat	D	G	
Std power timer 5.8 flat	B	D	
Std power timer 5.8 flat	B	D	
Std power timer 2.8 flat	D	D	
Std power timer 4.8 flat	D	G	
Std power timer 5.8 flat	B	D	
Ford 2.8 flat	D	E	H
Mulitlock 070 series	D	B	
Mulitlock 070 series	B	B	
Junior power timer 2.8 flat	D	D	
Sumitomo TS90 connector	B	B	H
Modu IV gold plated	D	B	
Mulitlock 040 series gold plated	D	A	
Micro qualock	D	I	
EECV	D	B	
EECV	D	B	
Kostal dia 1.50 series	D	J	
AMP 6.3 flat	D	B	
Junior power timer 2.8 flat	D	D	
2.8 series	D	B	I
Sumitomo TS90 connector	D	B	H
Ducon 0.60 gold plated	D	K	
AMP 6.3 flat	D	D	
Econoseal III 250 series	B	F	

Repair Procedure

• CAUTIONS:

⚠ Do not use crimping pliers, insulation strippers, butt splice connectors, heat shrink sleeves or pre-terminated wiring harness(s) that are not supplied with the Jaguar wiring harness repair kit. Each part has been designed to be used only with the other parts in this wiring harness repair kit.

⚠ Where the repair procedure indicates that a glue lined heat shrink sleeve should be applied, apply sufficient heat to the glue lined heat shrink to melt the glue in order to provide a water tight seal. Do **not** over heat the glue lined heat shrink sleeve so that the wiring harness insulation becomes damaged.

It is not correct to make more than five repair joints on the wiring harness to any electrical connector and if more damage is found at the same electrical connector then a new wiring harness must be installed.

- Remove the faulty terminal from the electrical connector using the extractor tool and correct tip. Make sure that any anti-backout device is released before trying to remove the terminal.

- CAUTION: : A number of electrical connector terminals are gold plated or gold flashed. When defective, they must be installed with a gold pre-terminated wiring harness(s) from the wiring harness repair kit. It is not always easy to identify the female as gold but the male pins are visually easier, therefore always check both male and female terminals to identify those which are gold. Under no circumstances are gold and tin terminals to be mixed as this will lead to early failure of the electrical contact.

  • NOTE: Never use a harness lead with a smaller diameter than the original harness lead.

  Select the correct size and type of pre-terminated wiring harness and butt splice connector from the wiring harness repair kit.
- Using the wire cutter on the stripping tool, cut the pre-terminated wiring harness and the harness cable to the required length.
- • NOTE: See illustration: **Stripping Insulation**

  From the Relationship Table, find the correct length of insulation to be stripped from the pre-terminated wiring harness and set the adjustable cable length stop to the correct length. Place the pre-terminated wiring harness in the wire stripper and remove the insulation.
- Put the cable identification sleeve(s) on to the wiring harness with the main cable colour nearest to the terminal.
- During this next step do not overtighten. Place the selected butt splice connector in the crimping tool, matching the aperture and the butt connector colours. Make sure that the window indentation in the butt connector is resting over the guide bar on the lower jaw. Partially close the grip until the butt connector is securely held in the aperture. This will give support to the butt connector while the pre-terminated wiring harness is inserted into it.
- • NOTE: See illustration: **Spice Correctly Located**

  Insert the pre-terminated wiring harness into the butt connector and make sure that the wire is against the wire stop. Close the grip firmly, crimping the lead to the butt connector. When the handles have been completely closed the butt connector will be freed from the tool as the handles are released. If the handles have not been completely closed then the jaws will hold the butt connector and it cannot be removed from the tool until the crimp is fully made by closing the handles completely.
- Make sure that the harness cable has been squarely cut and the correct length of insulation removed. If more than one splice is needed the butt connectors must be not be crimped to the wiring harness at the same distance from the connector. The splices must be staggered to prevent a bulk of splices in the same area of the wiring harness.
- It is preferable to cover the butt splice joint with heat shrink sleeve. This is desirable not essential, except where the electrical connector is a sealed electrical connector. Use the smaller diameter sleeve for red and blue pre-terminated wiring harness(s) and the large diameter sleeve for the yellow pre-terminated wiring harness(s). It is advisable to place the heat shrink over the completed joint but in some instances the sleeve will not pass over the terminal. Check, and if required, place the correct size sleeve onto the harness cable or pre-terminated wiring harness before crimping the butt splice to the wiring harness.
- Place the harness cable into the butt splice with the splice window over the guide bar. Make sure that the cable harness wire is against the stop in the butt splice, crimp the butt splice connector to the wiring harness.
- Gently pull the harness cables each side of the butt splice to make sure that a secure joint has been made.
- WARNING: Do not use a naked flame in areas where fuel or oil have been spilt. Clean the area of residual oil and fuel and wait until the fuel spill has fully evaporated.

  • CAUTIONS:

  When using a heat source make sure that it is localised and causes no damage to surrounding materials.

  Where the repair procedure indicates that a glue lined heat shrink sleeve should be applied, apply sufficient heat to the glue lined heat shrink to melt the glue in order to provide a water tight seal. Do **not** over heat the glue lined heat shrink sleeve so that the wiring harness insulation becomes damaged.

  Using a suitable heat source, shrink the sleeve over the butt splice.
- If further pre-terminated wiring harness(s) are to be installed to the same electrical connector, make sure that the lead is cut at a different length to the previous joint. This makes sure that the splices will, where possible, be staggered on the wiring harness and prevent a bulk of splices in one area.
- When all of the splices have been made, fit the terminal(s) to the electrical connector, taking care that the terminals are correctly orientated.
- Install the wiring harness cover and secure with adhesive electrical tape. Do not cover the wiring harness right to the electrical connector as the terminals must have a little movement and not be firmly bound to the electrical connector or wiring harness. Make sure that the cable identification sleeve(s) are showing at the wiring harness electrical connector.

Stripping Insulation

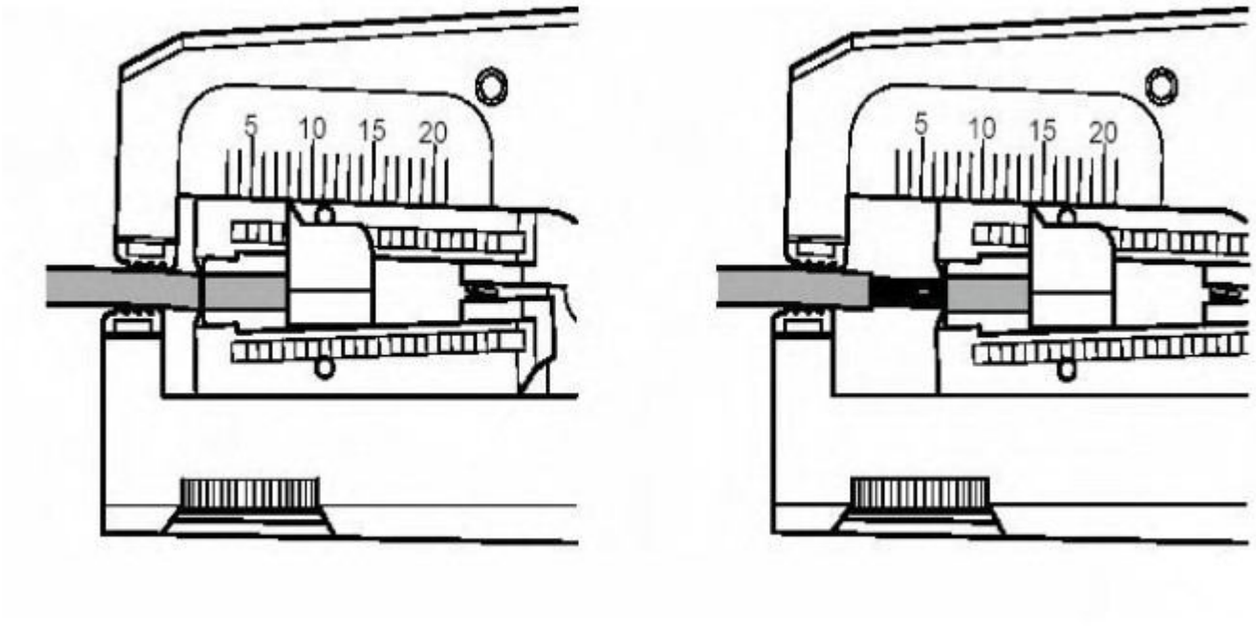

E130756

Spice Correctly Located

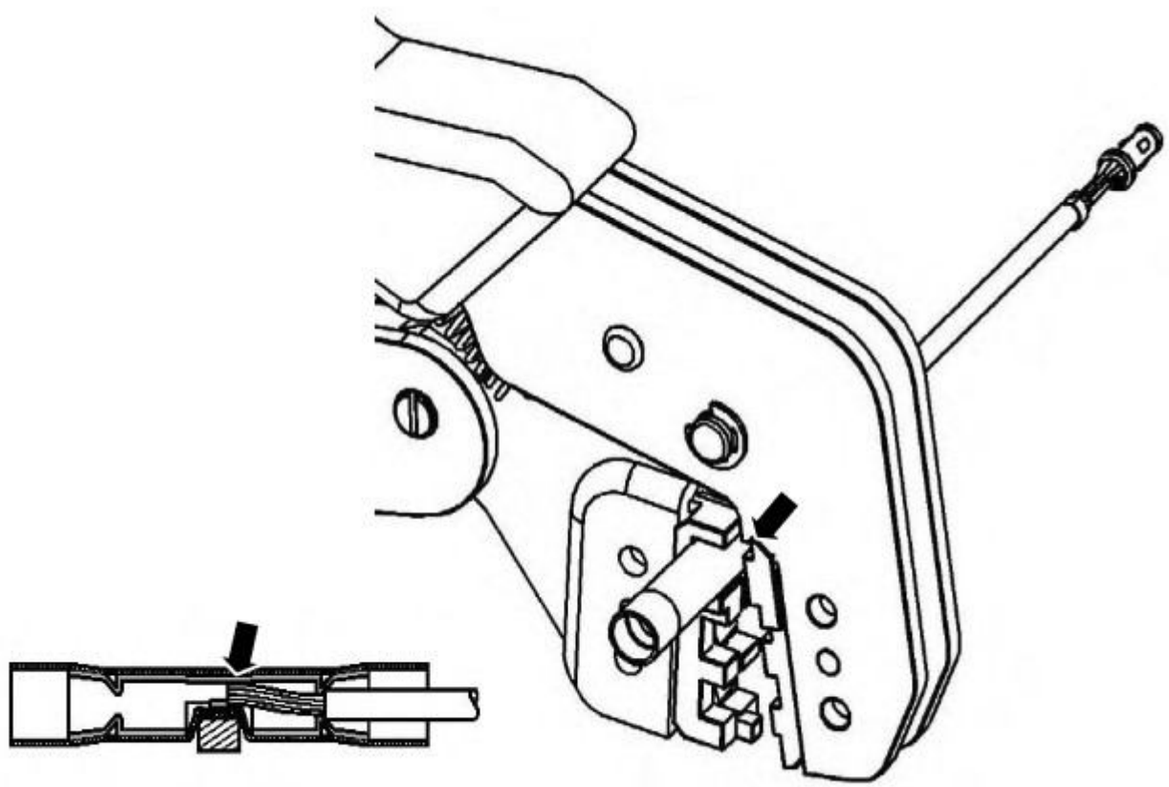

E130757

Published: 11-May-2011

Wiring Harnesses - Wiring Harness Repair

General Procedures

1. For additional information, refer to: Wiring Harness (418-02 Wiring Harnesses, Description and Operation).

Anti-Theft - Active - Anti-Theft - Active

Description and Operation

Component Location

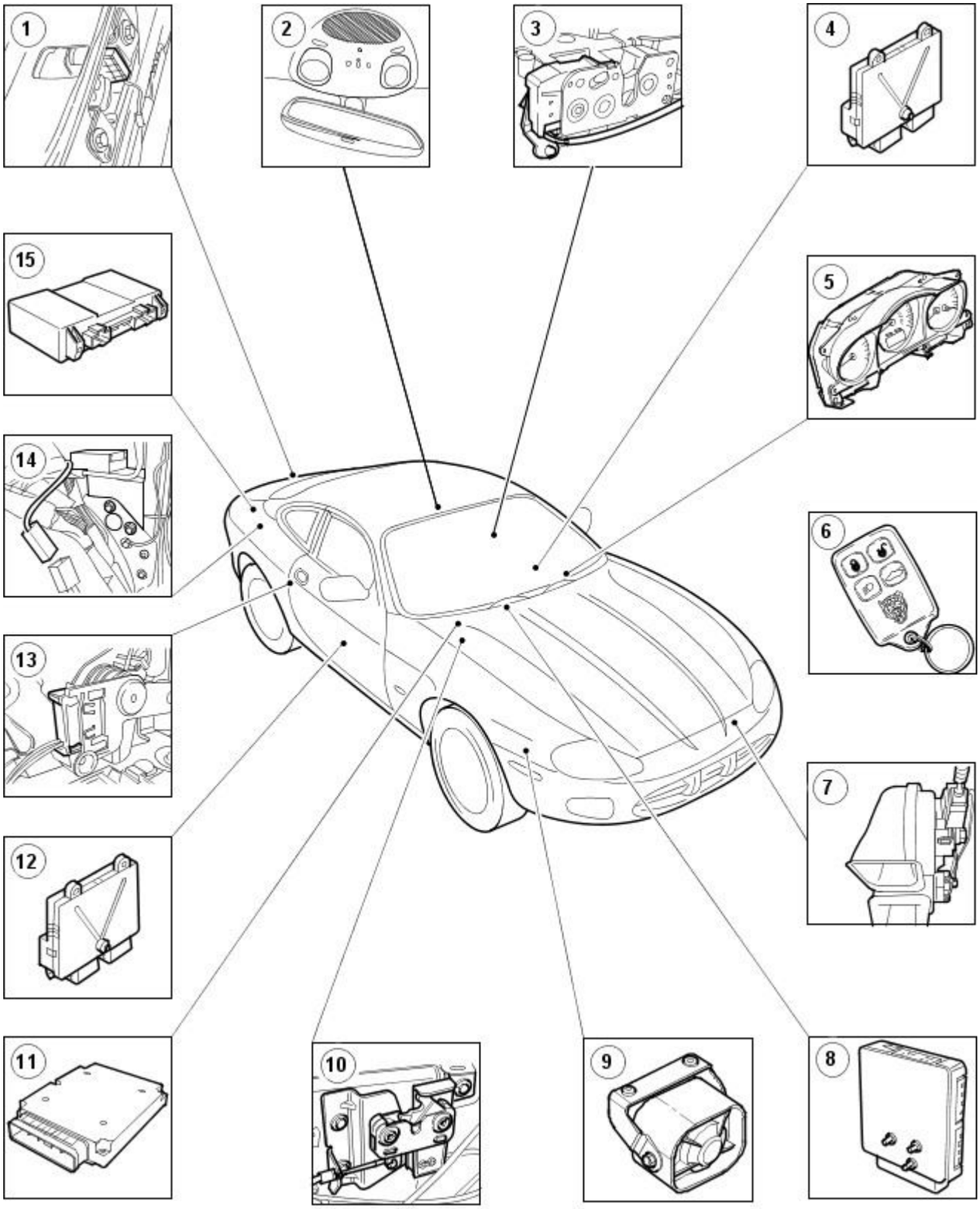

E 41776

Item	Part Number	Description
1	-	Luggage compartment lid switch
2	-	Glass break sensor
3	-	Door lock switch
4	-	Passenger door module (PDM)
5	-	Instrument cluster
6	-	Remote transmitter
7	-	Horns
8	-	Multifunction electronic module
9	-	Anti-theft alarm siren
10	-	Hood ajar switch
11	-	Engine control module (ECM)
12	-	Driver door module (DDM)

13	-	Door lock switch
14	-	Inclination sensor
15	-	Anti-theft alarm and double locking module.

The anti-theft system provides protection from unauthorized entry into the vehicle. The security system functions are controlled by the multifunction electronic module, anti-theft alarm and double locking module, driver door module (DDM), engine control module (ECM), and the instrument cluster. When the anti-theft alarm is triggered the system flashes the turn signal lamps, and sounds the horns, anti-theft alarm siren or a combination of both (Market dependant).

The base perimeter alarm consists of two door lock switches, hood switch and luggage compartment lid switch, radio sense, key sense, vehicle horn and separate siren (Rest of world) or anti theft alarm siren (battery backed - UK, Holland, France, Belgium, Luxemburg, Israel, Ireland, Malta), visual feedback from direction indicators on arm, disarm, alarm and error. Higher levels of alarm can be added for specific market requirements- glass break sensor located in the overhead console, inclination sensor (Dealer fit option only) located in the luggage compartment, anti theft alarm siren (battery backed) located under the right-hand fender.

Security System Arming Using A Remote Transmitter.

The system will be activated by the remote transmitter when the following input sequence is followed:

1. **1.** Turn the ignition off and remove the key.
2. **2.** Close all the doors (unlocked).
3. **3.** Press the LOCK button on the remote transmitter to lock the doors. The turn signal lamps will flash once.
4. **4.** Press the LOCK button twice the vehicle will double lock (if enabled). The turn signal lamps will provide a longer flash.
5. **5.** If the turn signal lamps do not flash, the system is not activated. (If a door is open and a key is in the ignition, the remote lock function will be inhibited and the direction indicators will flash seven times).
6. **6.** The transmission selector lever will illuminate a red flashing warning light and will continue to flash while the system is armed.

Security System Arming Using A Key.

The system will also be activated when the following input sequence is followed:

1. **1.** Turn the ignition off and remove the key.
2. **2.** Close all the doors (unlocked).
3. **3.** Turn the key towards the rear of the vehicle and then towards the front of the vehicle within three seconds, this will deadlock the doors and luggage compartment. Once deadlocking is complete the turn signal lamps will flash once and (Market dependant) an audible signal will be heard. This will then be followed by a longer flash of the turn signal lamps and a longer audible warning signal.
4. **4.** If the turn signal lamps do not flash, the system is not activated.
5. **5.** If the turn signal lamps flash five times either the door, hood or luggage compartment lid are open.
6. **6.** Turn and hold the key to the lock position to close all windows and convertible top (if equipped).

Opening any of the doors, hood, luggage compartment or convertible top (if equipped) will trigger the alarm after the alarm has been activated.

Disarming an Untriggered Alarm System

The system can be disarmed by carrying out one of the following procedures.

- Unlock the driver door with a key (NA, ROW).
- Press the UNLOCK button on the remote transmitter.
- If unlocked from the drivers door when the key barrel disarm is disabled (EURO), ignition switched to position II within 15 seconds from the door being opened.

Disarming a Triggered System

Carrying out either of the following steps will deactivate a triggered alarm system.

- Driver door is unlocked with the ignition key (NA, ROW only).
- Driver door is unlocked by pressing the UNLOCK button on the remote transmitter.
- The ignition key is cycled to ignition position II with a valid key.

Once the system has been triggered, the horns, siren or a combination of both (market dependant) and turn signal lamps will shut off automatically after 30 seconds (60 seconds NA). The system will then reset to an armed state and will trigger again if another trigger occurs.

PANIC Alarm Activation (NA, ROW)

1. **1.** Press the headlamp convenience button on the remote transmitter three times within three seconds. The turn signal lamps flash and the horns, siren or a combination of both (market dependant) sounds for approximately 30 or 60 seconds (market dependant) or until:
    - The ignition switch lock cylinder is switched to position II with a valid key.

The panic feature is controlled by the driver door module (DDM) and is independent of the anti-theft system.

Published: 11-May-2011

Anti-Theft - Active - Anti-Theft - Active

Diagnosis and Testing

The complexity of the electronics involved with the anti-theft, of which the front electronic module (FEM), driver door module (DDM), rear electronic module (REM), and the instrument cluster are a part, and the multiplexed communication network which are connected to it preclude the use of workshop general electrical test equipment. Therefore, reference should be made to the Jaguar approved diagnostic system, for detailed instructions on testing the anti-theft.

The Jaguar approved diagnostic system systematically tests and analyses all functions and the various systems affected by it.

Where a fault is indicated, some basic diagnostic methods may be necessary to confirm that connections are good and that wiring is not damaged before installing a new component.

Anti-Theft - Active - Anti-Theft Alarm Siren

Removal and Installation

Removal

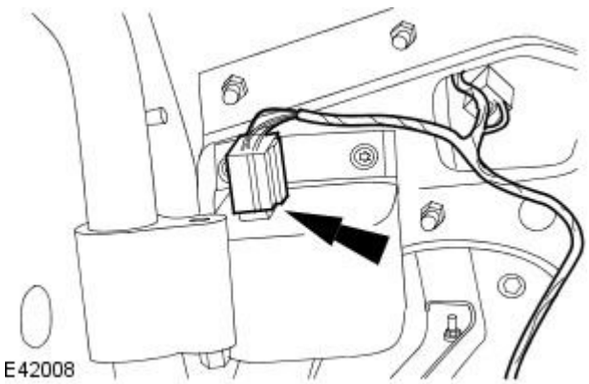

1. Remove the bulb access panel.
   For additional information, refer to: Bulb Access Panel (501-02 Front End Body Panels, Removal and Installation).
2. Disconnect the anti-theft alarm siren electrical connector.

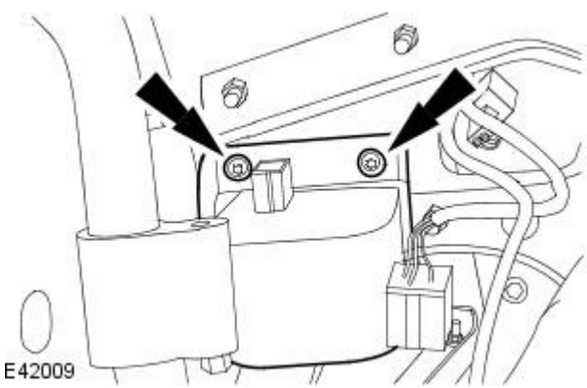

3. Remove the anti-theft alarm siren.
   - Remove the anti-theft alarm siren retaining screws.

Installation

1. To install, reverse the removal procedure.

Anti-Theft - Active - Inclination Sensor

Removal and Installation

Removal

1. Remove the right-hand luggage compartment side trim panel.
   For additional information, refer to: Luggage Compartment Side Trim Panel (501-05 Interior Trim and Ornamentation, Removal and Installation).
2. Disconnect the inclination sensor electrical connector.

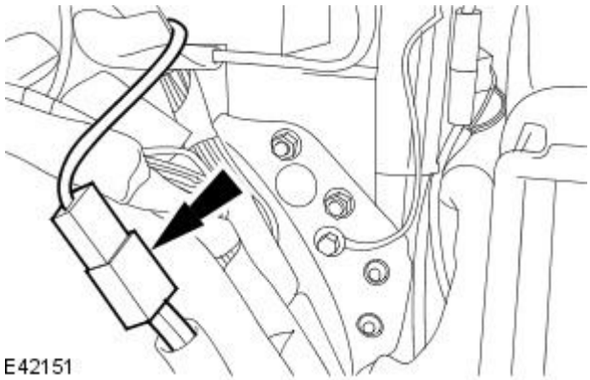

3. Remove the inclination sensor.

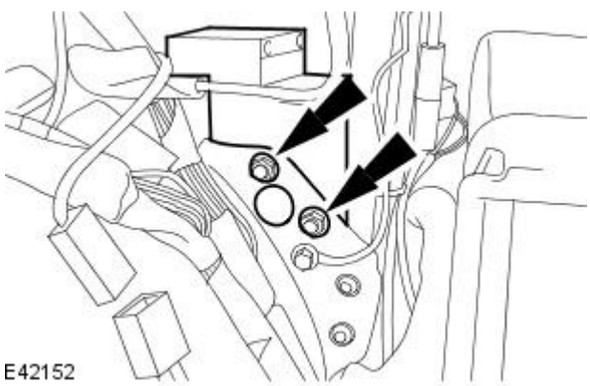

Installation

1. To install, reverse the removal procedure.

Anti-Theft - Passive - Anti-Theft - Passive

Description and Operation

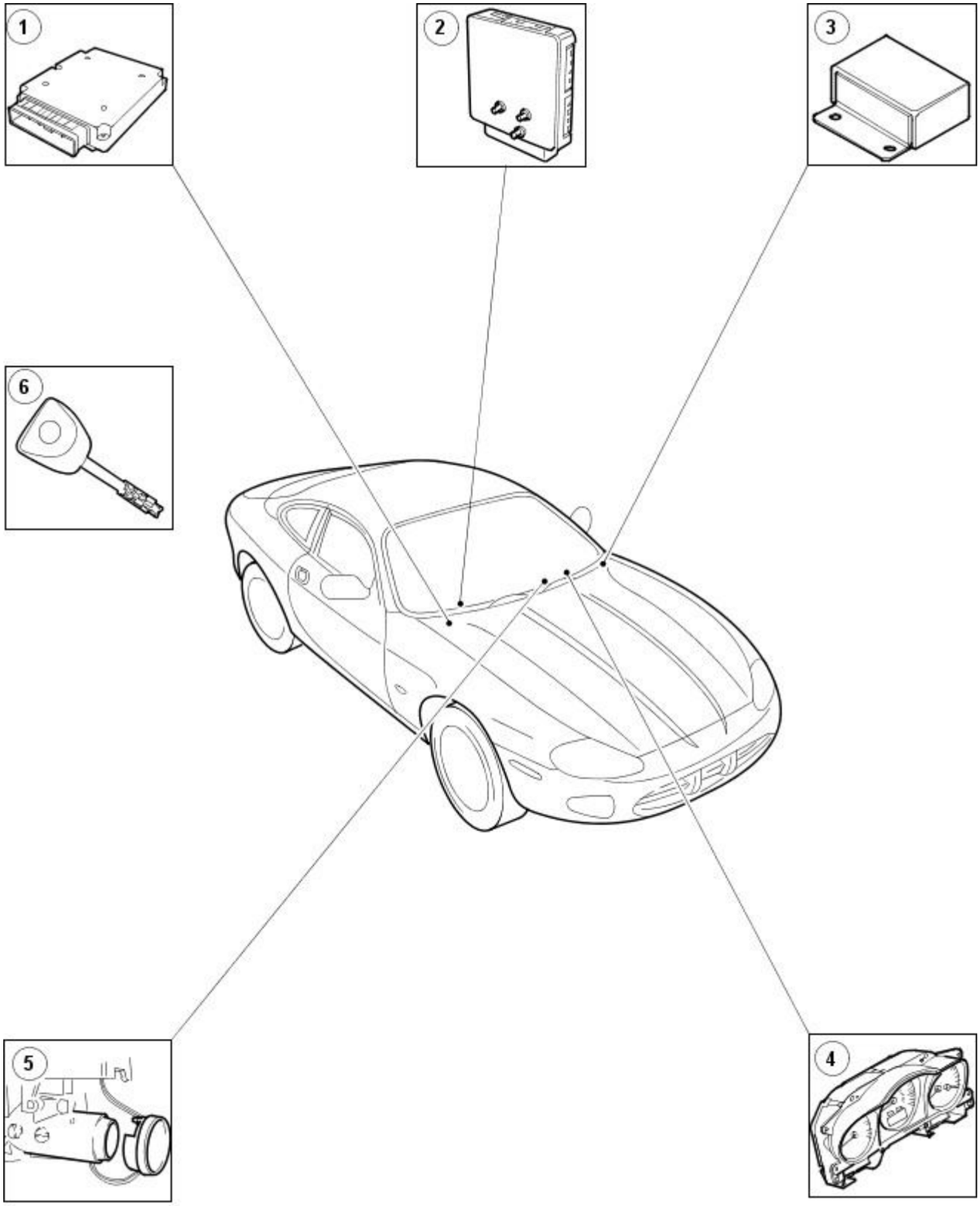

E 41777

Item	Part Number	Description
1	-	Engine control module (ECM)
2	-	Multifunction electronic module
3	-	Passive anti-theft system (PATS) module
4	-	Instrument cluster
5	-	Passive anti-theft system (PATS) transceiver
6	-	Transponder key

The immobilizer function is integrated between the passive anti-theft system (PATS) module, the multifunction electronic module, the instrument cluster and the engine control module (ECM). In order for the vehicle engine to crank and start the PATS module must have read a valid key and the correct information flow must have occurred between the multifunction electronic module, instrument cluster and the ECM.

The immobilizer system prevents unauthorized starting of the the engine. The PATS module transmits a valid key status only after an authentic data communication has been performed between the PATS module and the transponder key. When the transponder key is turned to the **RUN** position , the PATS module energizes the PATS transceiver, which in turn starts a data transfer with the transponder key. If the code received matches a code stored in the PATS module the PATS module will then perform a challenge / response routine with the

transponder key to determine its authenticity. Once the PATS module has authenticated the transponder key code received, it will send a "Key Valid" message to the multifunction electronic module via the dedicated ISO data link.

If the transponder key code does not match one stored in the PATS module memory a "Key Invalid" message will be sent to the multifunction electronic module. The multifunction electronic module will transmit the standard corporate protocol (SCP) - key valid message containing a unique 3 byte number invalid vehicle identification number (IVIN) to the instrument cluster, the instrument cluster upon receipt of this message will compare the data received against the unique number stored in its memory. If the comparison matches, the instrument cluster will set a flag to confirm valid transponder key received. If the comparison does not match the instrument cluster will set this flag to Invalid.

If the key is turned to the **crank** position, the instrument cluster will start the controlled area network (CAN) data exchange and start transmitting the idle status. If the transponder key status is valid, and the subsequent challenge / response is verified by the ECM, the ECM will allow the engine to start. Otherwise, the starting of the engine is disabled. The ECM controls the following outputs: starter relay, fuel injectors, ignition coils and fuel pump. The ECM will disable the fuel injectors, ignition coils, fuel pump drive and starter if any of the following conditions apply:

- A theft signal has been received from the instrument cluster, i.e. the transponder key code has not been received / IVIN does not match.
- A challenge code has been transmitted to the instrument cluster but no response code has been received.
- A challenge code has been transmitted to the instrument cluster and an incorrect response received.

Additionally the instrument cluster will log a diagnostic trouble code (DTC) if the failure was a result of the key transponder exchange.

Published: 11-May-2011

Anti-Theft - Passive - Anti-Theft - Passive

Diagnosis and Testing

The best method to confirm the correct operation of PATS is to check the LED (located in the center of the instrument panel). The LED should illuminate solid for 3 seconds when the key is turned to the run position and then extinguish. This validates the PATS functions (the key transponder matches the key code stored, the challenge/response sequence between the instrument cluster (IC) and the engine control module (ECM) was successful resulting in the ECM being enabled).

The ECM will disable the fuel injectors, ignition coils, fuel pump drive and starter if any of the following conditions apply, a theft signal has been received from the IC (the key has not been authenticated), a challenge code has been transmitted to the IC but no response code has been received, a challenge code has been transmitted to the IC and an incorrect response received.

If any of the above cases apply, the ECM will log DTC P1260. This DTC is further defined by sub-codes. The sub-codes are accessed through mode 12 (freeze frame data). Additionally the IC will log DTC's if the failure was a result of the key read.

Engine fails to crank

If a PATS fault is detected, the LED will flash for 60 seconds at 4Hz with a 50% duty cycle. At the end of this period, the LED will flash a 2 digit code, this code is repeated 10 times. The meaning of this code along with the frequency of flashing is given in the accompanying table (as a general rule a fault code of 16 or less will cause the vehicle not to crank. Additionally, the Jaguar Approved Diagnostic System should be used to check the DTC stored in the IC.

The most regular occurrence for failing to crank is due to the park and neutral switches (gearshift not in park or neutral). The start circuit is as follows, low side of relay coil (Switched directly from the instrument cluster, if conditions correct), high side of relay of coil (from ignition start position through gearbox rotary start switches to relay).

Another likely cause maybe the CAN network is malfunctioning, (the CAN circuit is open/short). This means that the IC and ECM would be unable to communicate resulting in no challenge being performed to enable the ECM.

On US manual vehicles the addition of a clutch switch has been included in the starting circuit, this switch takes place of the park/neutral switch (auto transmission). The switch activates at end of travel (clutch fully depressed).

Engine cranks but will not start

If the engine is cranking it means that the ECM is enabled with respect to the PATS. If PATS was disabled the ECM would not engage the starter. This could be confirmed by verifying the PATS LED prove out (illuminated solid for 3 seconds) or by reading DTC's from the IC and ECM. In this case, the fuel pump circuit should be verified. A fuel pump module, which is controlled by the ECM supplies the fuel pump. In all cases of suspected PATS non-start issues, the most logical failure modes should be eliminated first. Check all relevant supplies and grounds to the IC and ECM, check that the starter relay has a permanent 12v supply, check that the relay has a 12v supply and ground across the coil whilst the ignition is in the crank position.

PATS Fault Codes

For the various PATS modes/faults listed in the table , the IC will store a DTC and indicate this to the customer during the detection peroid defined in the 'when logged' column, by illuminating the indicator as described for 60 seconds and then flashing the LED 10 times as appropriate. The indication will stop immediately the ignition is turned to off any time during the fault indication sequence. Up to 4 DTC's could be stored per key read (1-!0 read attempts). No DTC's will be stored until all retry attempts are complete. Only the highest priority fault code will be flashed.

The PATS LED will be commanded on as shown under 'indication'. Normal PATS operations are complete within 400ms of the ignition switch transition from off to run or start, worst case for ECM communication problems will be less than 2 seconds. If PATS is not complete during the 2 seconds the ECM will terminate PATS and await the next ignition run/start event. PATS faults will be indicated via the LED as soon as possible and will terminate the LED prove out. At key off all previous flashing will cease and the perimeter anti theft system will control the LED when the vehicle is locked and armed.

PATS Fault code Table

Mode of Operation/Fault	When Logged	Ignition Switch Position	DTC	LED Fault Code	Indication
Prove out	N/A	Off to Run/Start	N/A	N/A	3 Seconds of steady illumination
Perimeter Anti theft Control	N/A	Off	N/A	N/A	Off or 0.5Hz, 5% duty cycle until off
Transceiver not connected	Key Read	Run/Start	B1681	11	60 seconds off 4Hz flashing at 50% duty cyle followed by fault code flashing 10 times
Key problem. No code received from Key	Key Read	Run/Start	B1600	13	60 seconds off 4Hz flashing at 50% duty cyle followed by fault code flashing 10 times
Key/Transceiver problem, partial code received, checksum error	Key Read	Run/Start	B1602	14	60 seconds off 4Hz flashing at 50% duty cyle followed by fault code flashing 10 times
Key code not stored in memory(also due to having 8 key codes already stored in memory)/ signature mismatch	Ke Read/Diagnostic Test	Run/Start	B1601	15	60 seconds off 4Hz flashing at 50% duty cyle followed by fault code flashing 10 times
Problem with CAN link - ECM disabled. ECM system status CAN message missing	ECM CAN Comm's	Run/Start	U2511 U1900	16	60 seconds off 4Hz flashing at 50% duty cyle followed by fault code flashing 10 times

Following part replacement the following codes maybe applicable, these are not normal customer mode fault codes.

Mode of Operation/Fault	When Logged	Ignition Switch Position	DTC	LED Fault Code	Indication
Following new key programming Jaguar Approved Diagnostic System application, 2 keys have not been cycled in the ignition	B and A/Dealer	Run/Start	B1213	21	60 seconds of steady indication followed by fault code flashing 10 times
PATS reset application not performed after part IPK replacement	B and A/Dealer	Run/Start	B2141	22	60 seconds of steady indication followed by fault code flashing 10 times
PATS reset application not performed after part ECM replacement	Challenge/Response	Run/Start	U2510	23	60 seconds of steady indication followed by fault code flashing 10 times

1. **1.** If an obvious cause for an observed or reported concern is found, correct the cause (if possible) before proceeding to the next step.
2. **2.** If the cause is not visually evident, verify the symptom and refer to the Jaguar Approved Diagnostic System.

Anti-Theft - Passive - Passive Anti-Theft System (PATS) Module

Removal and Installation

Removal

1. Remove the instrument panel.
   For additional information, refer to: Instrument Panel (501-12 Instrument Panel and Console, Removal and Installation).
2. Remove the driver side register finish panel.

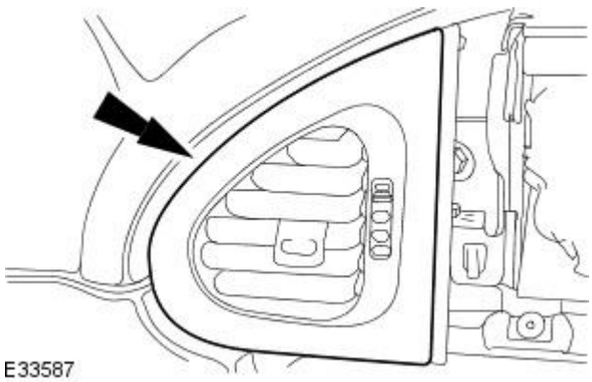

3. Remove the driver side register.

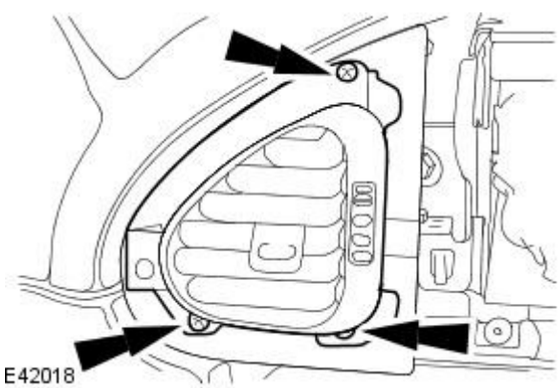

4. Remove the driver side duct.
5. Remove the passive anti-theft system (PATS) module retaining screws.

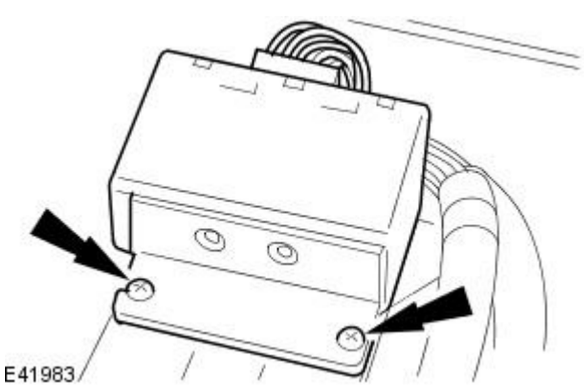

6. Remove the PATS module.
   - Disconnect the PATS module electrical connector.

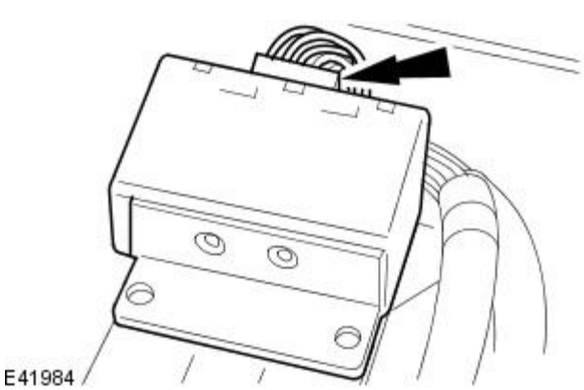

Installation

1. To install, reverse the removal procedure.

Anti-Theft - Passive - Passive Anti-Theft System (PATS) Transceiver

Removal and Installation

Removal

1. Remove the steering column lower shroud.
   For additional information, refer to: Steering Column Lower Shroud (501-12 Instrument Panel and Console, Removal and Installation).
2. Remove the steering column upper shroud retaining screws.

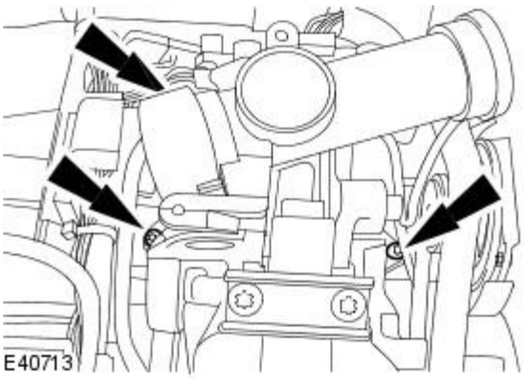

3. Disconnect the passive anti-theft system (PATS) transceiver electrical connector.

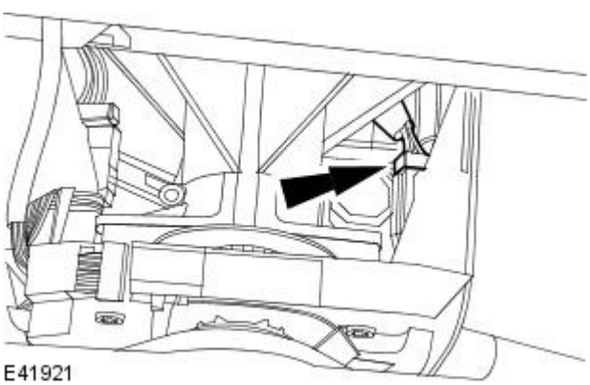

4. Remove the PATS transceiver.

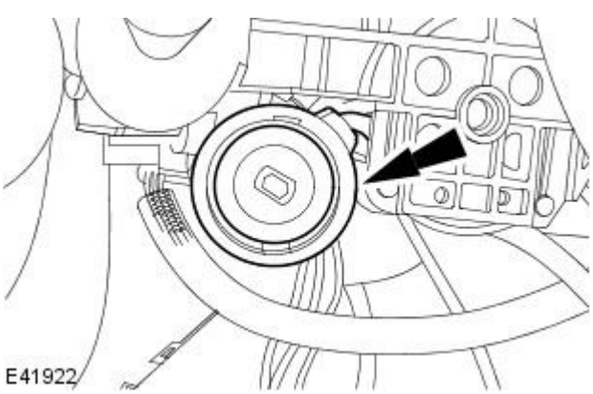

Installation

1. To install, reverse the removal procedure.

Published: 11-May-2011

Navigation System - Navigation System

Description and Operation

Description

A fully integrated navigation system installed as an option, employs visual displays and voice commands to provide various types of route guidance information to the driver. Using signals from the global positioning satellite (GPS) system together with terrestrial map data, vehicle road speed and yaw rate, the system calculates the position of the vehicle to an accuracy of a few metres.

Following receipt of information on the desired destination and selected route, the system provides both visual and/or voice instructions as progress is made along that route. In the event of deviation from the original route, the navigation system determines vehicle position and revises the route accordingly.

Operation

With a DVD for the appropriate region or country loaded into the DVD reader, information on the destination is fed into the system using the screen menus and panel controls to make selections and input text as directed. Addresses can be entered or selections made from the DVD database list of 'Points of Interest'. Other types of destination such as road intersections, recent destinations, map cursor positions or local points of interest within a specified radius can also be requested. In addition to DVD stored data, 'memory point' map locations for subsequent selection as route destinations or 'landmarks' can be created. The route initially specified can also be split into sections, or modified to include or avert selected roads or highways.

Screen Guidance

Three types of screen guidance view are available:

- Map View displays the appropriate map area with the route highlighted and the vehicle icon arrowed. The map automatically scrolls to maintain the vehicle icon on screen.
- Arrow View is a diagrammatic display providing a detailed view of the junction approached and the direction to be taken together with distance information.
- With Hybrid View selected, the map and highlighted route are displayed until, on approaching the next junction or manoeuvre point, Arrow View appears.

Voice Guidance

Synthesised Voice Guidance provides audible instructions for the junction or manoeuvre point approached (e.g. 'Turn Left') and a pushbutton on the control panel enables these instructions to be repeated. Voice Guidance instructions are broadcast through the ICE system and can be adjusted using the MODE and volume controls on the radio/cassette panel. The balance between Voice Guidance and ICE volume can also be varied.

Clock

A digital clock displays 12 hour format time in the lower left hand corner of the screen when the navigation system is switched on. No adjustment is provided as the correct time is automatically maintained from GPS satellite signals. Time zone and Summer Time settings are selectable from a screen menu and must be adjusted to suit vehicle location and time of year.

System Components

The navigation system comprises the following components:

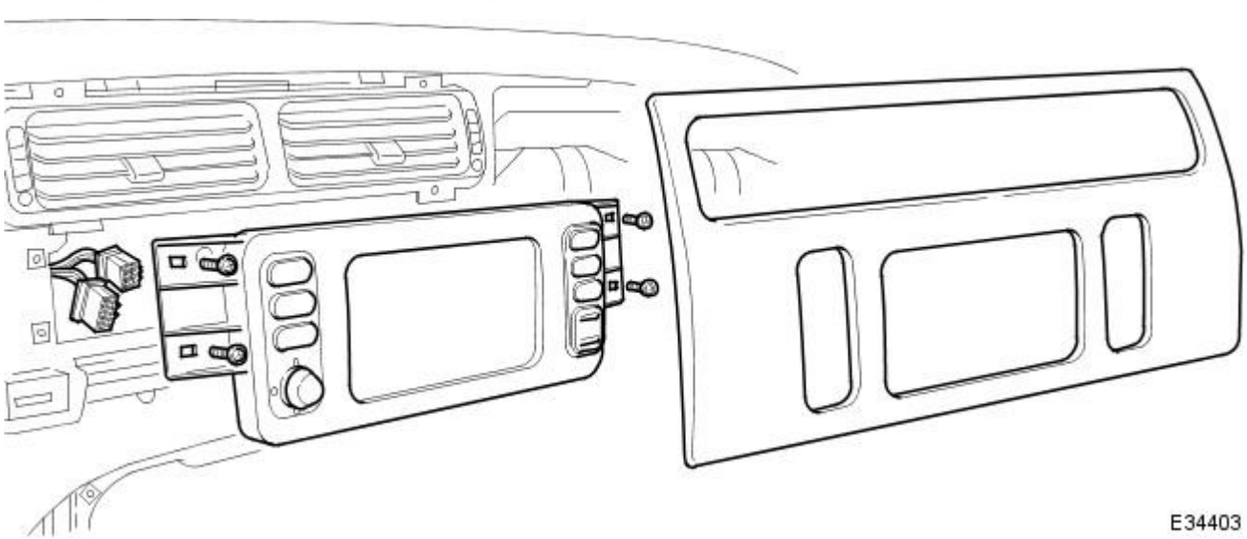

The integral display and controls panel is installed in the central facia area otherwise occupied by the clock and minor gauge module. The panel is secured by four screws and finished by a clip-in veneer panel.

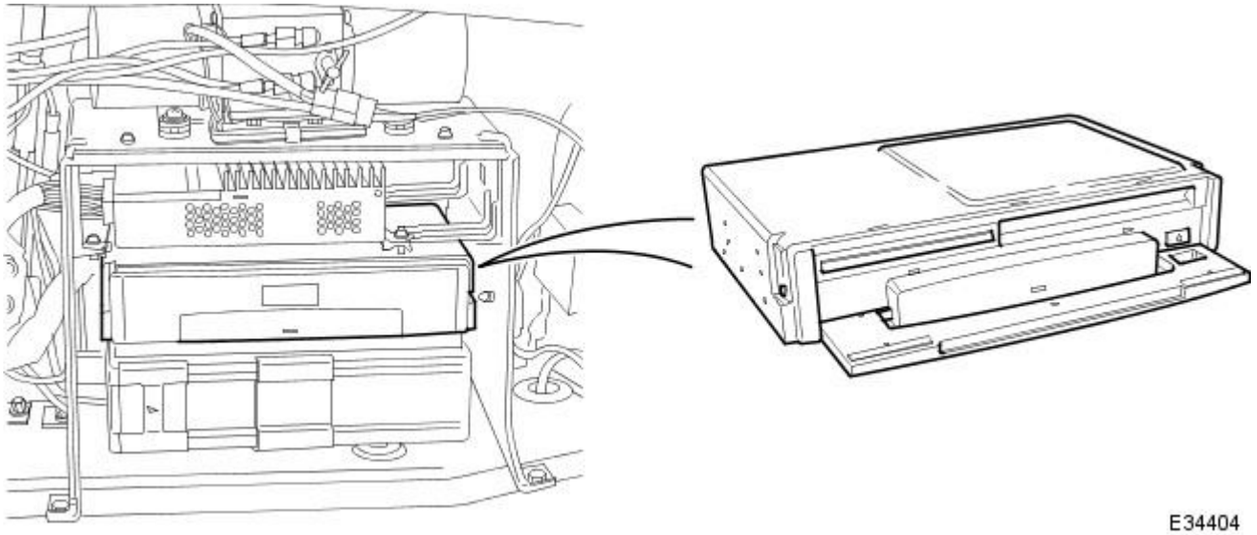

The navigation system DVD reader provides data storage, processing and system control and incorporates a gyrometer for measurement of vehicle yaw rate. Maps and associated data for the relevant country or region are received from digital versatile disks (DVD) loaded into the reader. The navigation DVD reader is located between the CD autochanger and the power amplifier (premium audio only) in the trunk.

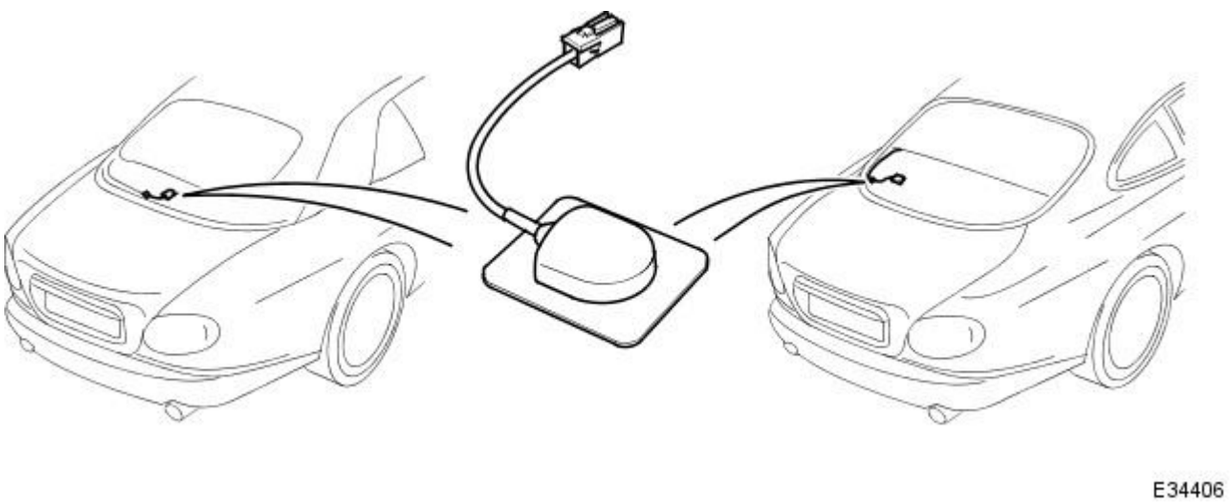

The global positioning system (GPS) antenna is connected to the DVD reader by a co-axial cable, the inner conductor of which carries a 5Vdc power supply. The antenna is secured to the rear parcel shelf (coupe) or the convertible top stowage compartment by a self-adhesive coating on the base.

Published: 11-May-2011

Navigation System - Navigation System

Diagnosis and Testing

Principle of Operation

For a detailed description of the navigation system, refer to the relevant Description and Operation sections in the workshop manual. REFER to: Navigation System (419-07, Description and Operation).

Inspection and Verification

1. **1.** Verify the customer concern.
2. **2.** Visually inspect for obvious signs of mechanical or electrical damage.

Visual Inspection Chart

Mechanical	Electrical
• Navigation system DVD player Mechanism	• Navigation system display • Navigation system module • GPS antenna • Wiring harness for damage and corrosion • Electrical connector(s) • ABS Module • Audio unit

3. **3.** If an obvious cause for an observed or reported concern is found, correct the cause (if possible) before proceeding to the next step.
4. **4.** If the cause is not visually evident, check for Diagnostic Trouble Codes (DTCs) and refer to the DTC Index.

DTC Index

CAUTION: When probing connectors to take measurements in the course of pin point tests, use the adapter kit, part number 3548-1358-00

• NOTE: If the control module/component is suspect and the vehicle remains under manufacturer warranty, refer to the warranty policy and procedures manual (section B1.2), or determine if any prior approval program is in operation, prior to the installation of a new component.

• NOTE: When performing voltage or resistance tests, always use a digital multimeter (DMM) accurate to three decimal places and with a current calibration certificate. When testing resistance, always take the resistance of the DMM leads into account.

• NOTE: Check and rectify basic faults before beginning diagnostic routines that involve pinpoint tests.

• NOTE: Inspect connectors for signs of water ingress, and pins for damage and/or corrosion.

• NOTE: If DTCs are recorded and, after performing the pinpoint tests, a fault is not present, an intermittent concern may be the cause. Always check for loose connections and corroded terminals.

DTC	Description	Possible Cause	Action
B1342	ECU is defective	• Satellite navigation system module - internal ECU failure	Carry out any pinpoint tests associated with this DTC using the manufacturer approved diagnostic system. check navigation system module for internal failure. Install a new module as required, refer to the new module installation not at the top of the DTC index.
B2197	TV module error	• Satellite navigation system display - module or switch fault	Carry out any pinpoint tests associated with this DTC using the manufacturers approved diagnostic equipment. Check the satellite navigation system module for failure. Install a new module as required, refer to the new module installation note at the top of the DTC index.
B2198	Traffic Master module error	• Satellite navigation system module - traffic master module fault	Refer to electrical circuit diagrams, notes and check navigation system module communication circuit to traffic master module for failure. install a new module as required, refer to the new module installation note at the top of the DTC index.
B2199	VICS Module Error	• Satellite navigation system module - VICS (vehicle information control system) module fault	Refer to electrical circuit diagrams, notes and check navigation system module communication circuit to vehicle information control system module for faults. install a new module as required, refer to the new module installation note at the top of the DTC index.
B2201	No communication with traffic master module	• Satellite navigation system module - traffic master communication fault. This DTC is logged if the module is not fitted. It must be masked out by the tester when the module is not fitted to a particular vehicle	Refer to electrical circuit diagrams, notes and check navigation system module communication circuit to traffic master module for a fault. Install a new module as required, refer to the new module installation note at the top of the DTC index.
B2202	No communication to VICS module	• Satellite navigation system module to vehicle information control module - communication fault. This DTC is logged if the module is not fitted. It must be masked out when it is not fitted to a particular vehicle.	Refer to electrical diagrams, nots and check navigation system module communications circuit to vehicle information control module for faults.
B2204	GPS Antenna connection open or short	• Satellite navigation module (GPS) Antenna - open circuit or short circuit	Carry out any pinpoint tests associated with this DTC using the manufacturer approved diagnostic system. refer to electrical circuit diagrams, notes and check navigation system module (GPS) antenna for open or short circuit.

DTC	Description	Possible Cause	Action
B2205	GPS receiver fault	• Satellite navigation system module - global positioning satellite receiver fault	Carry out any pinpoint tests associated with this DTC using the manufacturer approved diagnostic system. Refer to the electrical circuit diagrams, notes and check navigation system module global positioning satellite (GPS) antenna circuit. Check the antenna is not obstructed (vehicle must be outside when being tested). Replace module is fault persists.
B2206	Gyroscope fault	• Satellite navigation system module - gyroscope fault	Carry out any pinpoint tests associated with this DTC using the manufacturer approved diagnostic system. Refer to electrical circuit diagrams, nots and check navigation system module for faults. Install a new module as required, refer to the new module/component installation note at the top of the DTC index.
B2207	Internal ECU ROM checksum fault	• Satellite navigation system - module internal failure	Refer to electrical circuit diagrams, notes and check the navigation system module for faults. Install a new module as required, refer to the new module/component installation note at them top of the DTC index.
B2208	Navigation module to display and switch module communication error	• Satellite navigation system module - communication to display and switch module fault.	Refer to electrical circuit diagrams, notes and check navigation system display and switch module communication circuit for fault
B2646	Antenna circuit open circuit #1	• Satellite navigation system module navigation system antenna - open circuit	refer to electrical diagrams, notes and check navigation systems antenna circuit for open circuit. To restore power the fault must be removed and the user must key off and on.
B2647	Antenna circuit open circuit #2	• Satellite navigation system module navigation system antenna - open circuit	Refer to electrical diagrams, notes and check navigation systems antenna circuit for open circuit. To restore power the fault must be removed and the user must key off and on.
B2648	Antenna circuit open circuit #3	• Satellite navigation system module navigation system antenna - open circuit	Refer to electrical diagrams, notes and check navigation systems antenna circuit for open circuit. To restore power the fault must be removed and the user must key off and on.
B2649	Antenna circuit open circuit #4	• Satellite navigation system module navigation system antenna - open circuit	Refer to electrical diagrams, notes and check navigation systems antenna circuit for open circuit. To restore power the fault must be removed and the user must key off and on.
B2650	Antenna circuit short circuit #1	• Satellite navigation system module navigation system antenna - short to power or ground	Refer to electrical diagrams, notes and check navigation systems antenna circuit for short to power or ground. To restore power the fault must be removed and the user must key off and on.
B2651	Antenna circuit short circuit #2	• Satellite navigation system module navigation system antenna - short to power or ground	Refer to electrical diagrams, notes and check navigation systems antenna circuit for short to power or ground. To restore power the fault must be removed and the user must key off and on.
B2652	Antenna circuit short circuit #3	• Satellite navigation system module navigation system antenna - short to power or ground	Refer to electrical diagrams, notes and check navigation systems antenna circuit for short to power or ground. To restore power the fault must be removed and the user must key off and on.
B2653	Antenna circuit short circuit #4	• Satellite navigation system module navigation system antenna - short to power or ground	Refer to electrical diagrams, notes and check navigation systems antenna circuit for short to power or ground. To restore power the fault must be removed and the user must key off and on.
B2655	Switch and display module is defective	• Satellite navigation system module - display faulty	Refer to electrical circuit diagrams, notes and check navigation system display and switch module for failure. Install a new display module as required. Refer to the new module/component installation note at the top of the DTC index
B2656	DVD (Digital Versatile Disk) error	• Satellite navigation system module -DVD error (DVD is integral to the navigation system module ECU)	Refer to electrical circuit diagrams, notes and check navigation system module for faults. Install a new module as required. Refer to the new module/component installation note at the top of the DTC index

Navigation System - Navigation System Antenna

Removal and Installation

Removal

1. Remove trim from rear parcel shelf/convertible top compartment. Refer to 76.67.06 (coupe only).
2. Disconnect antenna flying lead connector.

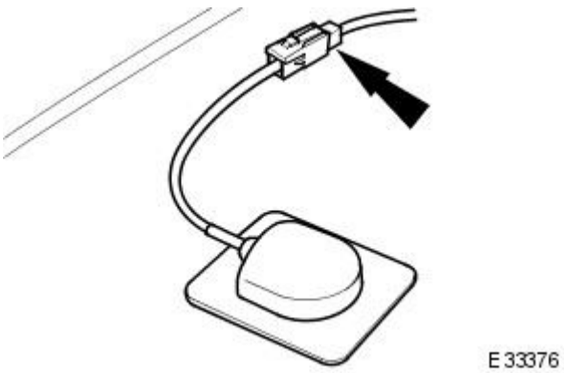

3. Using a thin blade, carefully release antenna base from parcel shelf panel/convertible top compartment.

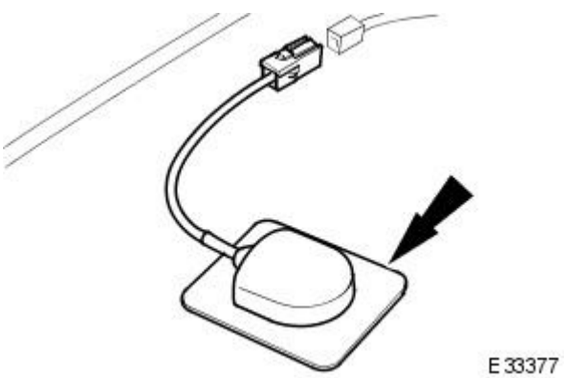

4. Clean antenna mounting area of parcel shelf panel/convertible top compartment ensuring that any residual adhesive is removed.
5. If original antenna is to be re-used, remove adhesive pad and clean any residual adhesive from base.

Installation

1. Remove paper backing from one side of adhesive pad and press firmly onto antenna base.
2. Position antenna at parcel shelf panel/convertible top compartment and connect flying lead connector.
3. Remove paper backing from adhesive pad and press base firmly into position on parcel shelf/convertible top compartment.
4. Install rear parcel shelf/convertible top compartment trim. Refer to 76.67.06 (coupe only).

Navigation System - Navigation System Compact Disc (CD) Unit

Removal and Installation

Removal

1. Remove battery cover and disconnect ground lead from battery terminal. Refer to 86.15.19
2. Remove trunk RH side liner. Refer to 76.19.22.
3. Disconnect three connectors from side of amplifier unit (premium audio only).

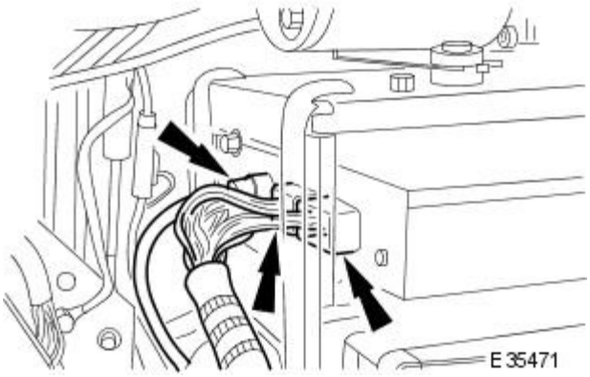

4. Remove four bolts securing audio/DVD reader module stack to mounting frame.

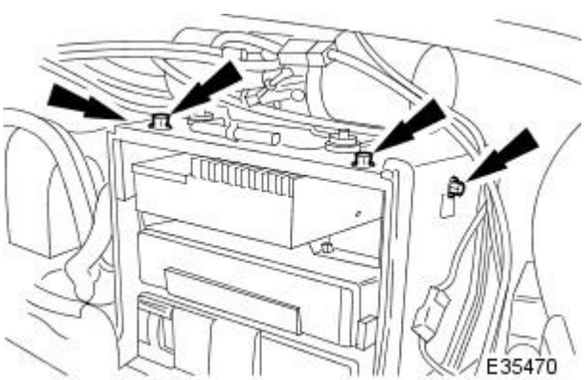

5. Carefully withdraw audio/DVD reader module stack and disconnect four connectors from rear of DVD reader module

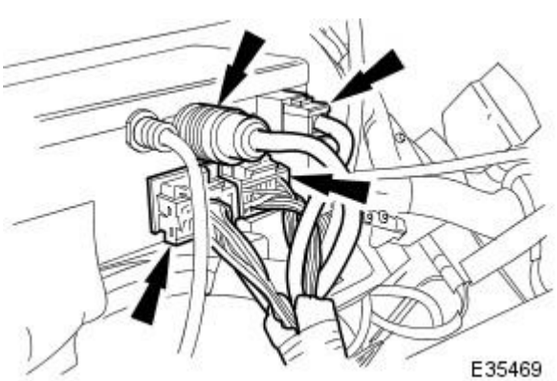

6. Remove audio/DVD reader module stack from trunk.
7. Remove four DVD reader module to mounting bracket screws and withdraw module from bracket.

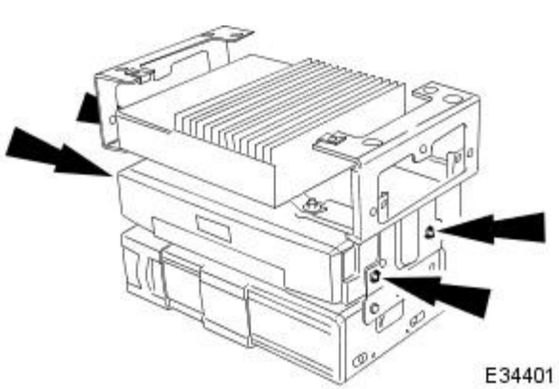

Installation

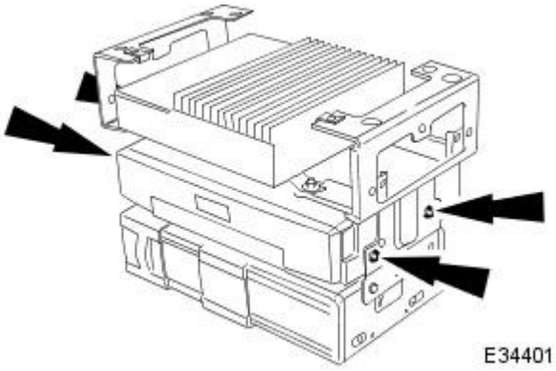

1. Position DVD reader module in mounting bracket and install screws.

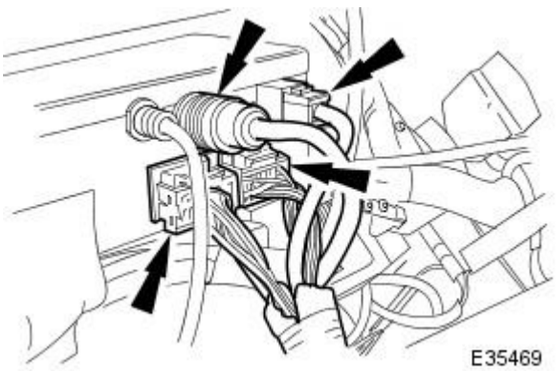

2. Position audio/DVD reader module stack at mounting bracket and connect DVD reader harness connectors.

3. Ensure that amplifier and CD autochanger harnesses will not obstruct stack installation.

4. Finally position stack in mounting bracket and install bolts.

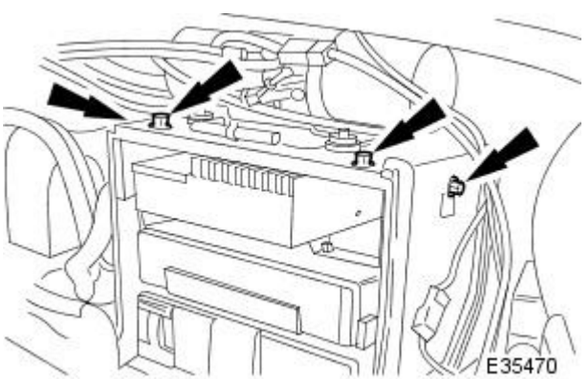

5. Connect amplifier unit harness connectors (premium audio only).

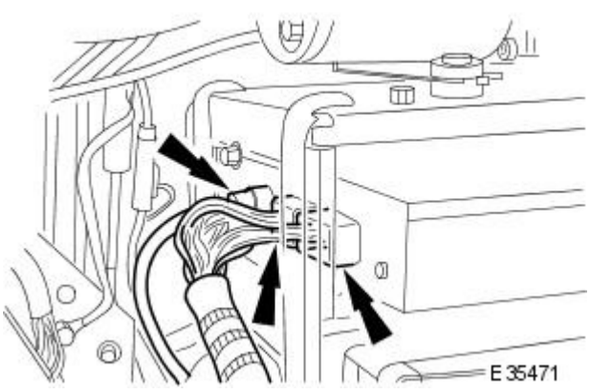

6. Install trunk RH side liner. Refer to 76.19.22.

7. Connect ground cable to battery terminal and install battery cover. Refer to 86.15.15.

Navigation System - Navigation System Display Module

Removal and Installation

Removal

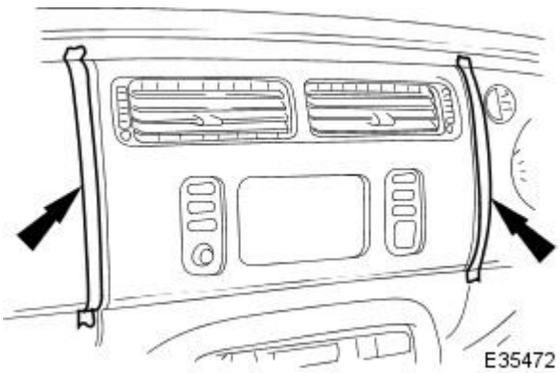

1. Remove battery cover and disconnect ground cable from battery terminal. Refer to 86.15.19
2. Position protective tape along adjacent veneer edges.

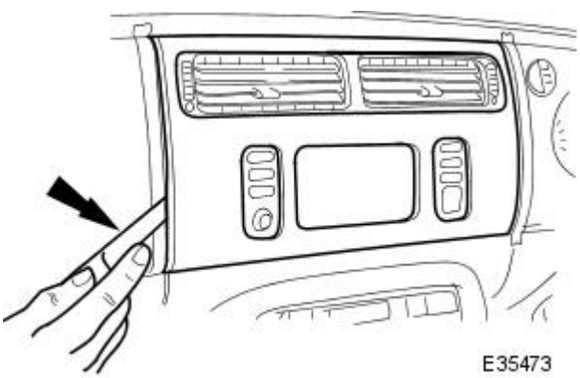

3. Commencing at bottom, use a thin plastic blade to release four centre veneer clips.

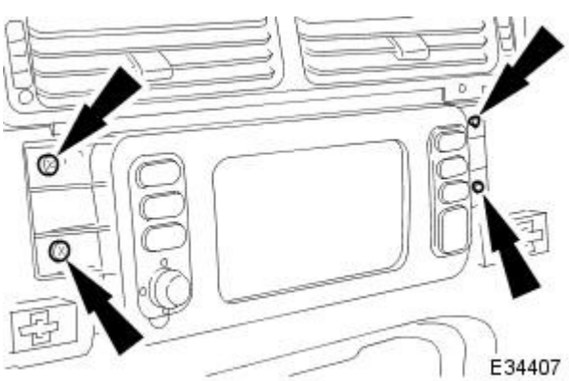

4. Remove the four display and controls panel to facia screws.

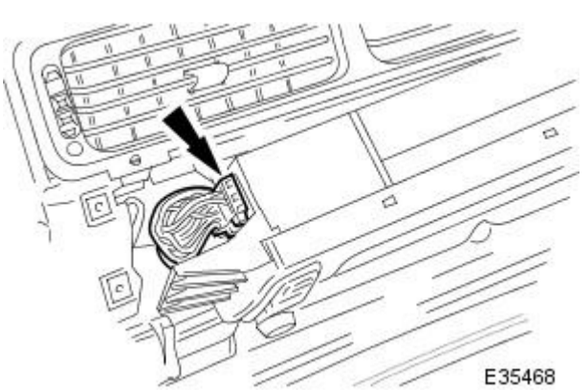

5. Remove Panel.
   - Partially withdraw panel for access.
   - Depressing tangs, disconnect harness connectors.
   - Remove panel from facia

Installation

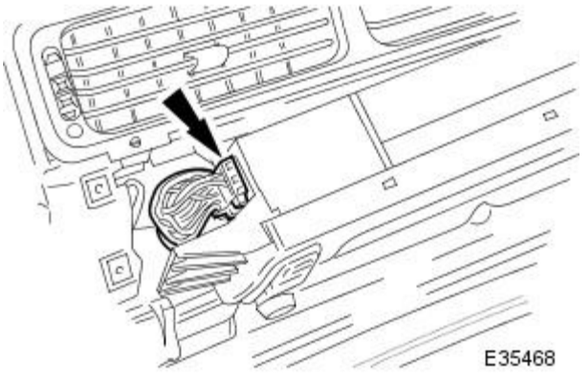

1. Position panel at facia and connect harness connectors.

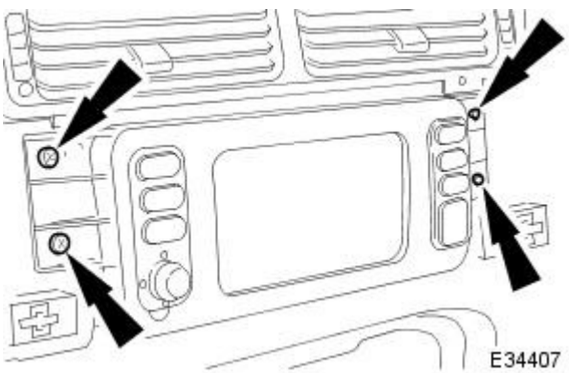

2. Fully seat panel in facia and install screws.

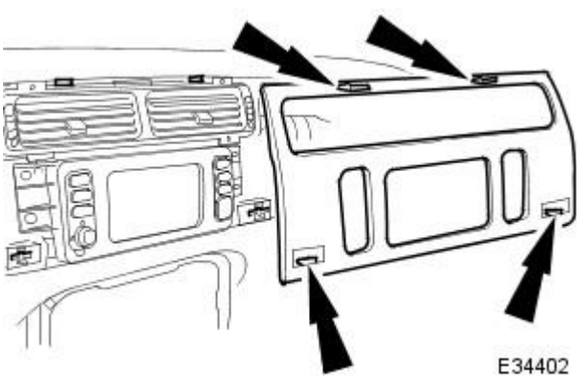

3. Position and fully seat veneer panel ensuring all securing clips are engaged.

4. Remove protective tape from adjacent veneers.

5. Connect ground cable to battery terminal and install battery cover. Refer to 86.15.15.

Published: 11-May-2011

Cellular Phone - Cellular Phone

Description and Operation

The portable cellular phone system consists of:

- Cellular phone handset (GSM).
- Cradle (GSM).
- Cellular portable (US Only).
- Handset battery (US Only).
- Hang up cup (US Only).
- Roof console mounted microphone.
- Steering wheel switch controls.
- Portable support electronics (PSE) module (US Only).
- Transceiver (GSM).
- In-bumper cellular phone antenna.
- Antenna cable.
- Audio unit controls.

The cellular phone handset is located within the center console armrest. The audio control unit and the steering wheel controls are utilized to operate the system.

The vehicle utilizes two unique cellular phones systems:

- GSM
- US CDMA/TDMA digital and AMPS analogue systems

The voice activation control module provides the handsfree operation for cellular phone.

To activate the handsfree function:

1. **1.** Switch the ignition to the RUN position. After 4-6 seconds the system will be initialized and "VOICE READY" will be displayed in the message center.
2. **2.** Operate the VOICE/PHONE switch on the steering wheel.
3. **3.** Clearly state the command when "LISTENING" is displayed in the message center.
4. **4.** Operate the VOICE/PHONE switch on the steering wheel or remain silent for 1 second. If speech is detected "PROCESSING" will be displayed in the message center. Operating the VOICE/PHONE switch again will cancel the voice session.

Refer to the Cellular Phone user guide for complete operating instructions.

For additional information on the voice activation control module, refer to Section 419-10 Multifunction Electronic Modules .

Published: 11-May-2011

Cellular Phone - Cellular Phone

Diagnosis and Testing

Inspection and Verification

The complexity of the electronics involved with the cellular phone preclude the use of workshop general electrical test equipment. Therefore, reference should be made to the Jaguar Approved Diagnostic System for detailed instructions on testing the cellular phone.

The Jaguar Approved Diagnostic System tests and analyses, in detail, all functions of the cellular phone.

Where a fault involving the cellular phone is indicated by the Jaguar Approved Diagnostic System, some basic diagnostic methods may be necessary to confirm that connections are good and that the wiring is not damaged, before installing new components.

1. **1.** Verify the customer concern by operating the portable cellular phone both in portable mode and while connected to the vehicle.
2. **2.** Make sure the portable convertible phone (US Only) is switched ON. With the power button ON, the system should be on while the ignition switch is in ACC or RUN.
3. **3.** Make sure the customer is calling within the coverage area. No Svc will appear in the display if the customer is calling from outside the coverage area.
4. **4.** Check to see if the Roam indicator is on. If so, follow the roaming instructions in the Cellular Phone User Guide.
5. **5.** Check to see if the display reads Locked CDMA/TDMA or pin for GSM. If so, press Clr and enter the customer three-digit unlock code for CDMA/TDMA or the customer pin number on the phone handset for GSM.
6. **6.** Make sure the portable cellular phone (US Only) is securely seated in the holder.
7. **7.** Make sure the GSM handset coil cord connector is correctly fitted to the armrest connector.
8. **8.** Check the portable cellular phone (US Only) antenna connections.
9. **9.** Check the portable cellular phone system registration (US Only). Also, check to make sure that the portable cellular phone is correctly programmed. Incorrect programming can result in single system scanning, loss of speed dialing, loss of hands-free audio, loss of auto redial, loss of dial tone multi-frequency tones, and the loss of other keypad/portable cellular phone functions.
10. **10.** Make sure that a valid SIM card is inserted in the handset SIM card reader (GSM Only)
11. **11.** Check the customer account status with the cellular carrier.

If the customer concern is still present, follow these steps to diagnose the concern:

12. **12.** Visually inspect for obvious signs of mechanical or electrical damage:

Visual Inspection Chart

Mechanical	Electrical
• Portable cellular phone (US only) • Microphone • Portable cellular phone holder (US only) • Coil cord	• Electrical connectors • Wiring harness for damage or corrosion • Fuses

System/Carrier Concerns - All Systems

Dropped calls, bad connections, noisy audio and other intermittent symptoms usually indicate a system or cellular carrier concern, and are not the fault of the phone itself. Such symptoms may occur in situations such as the following:

- In certain geographic areas (for example: areas of excessive foliage or hills) or at the edge of coverage areas.
- At the same place each day.
- At the same time each day.
- Under bridges, tunnels, in lower freeways, or in congested downtown areas.

If the customer phone exhibits any of the above symptoms or symptoms occur under the above conditions, the customer or the dealer should contact customer assistance at their particular cellular provider/carrier or call the assistance number provided in the Jaguar Cellular System Dealer kit.

Other Possible Concerns - All Systems

1. **1.** If, for some reason, the customer's electronic serial number was incorrectly recorded in the carrier switch, the phone will not work. Call the assistance number provided in the Jaguar Cellular System Dealer kit to check the electronic serial number CDMA/TDMA only.
2. **2.** A customer initial call must be made in his/her home coverage area for correct activation of the Jaguar Cellular System.
3. **3.** A customer may have to wait until after 24 hours of the coverage activation before making a call from outside of his/her home coverage area or the phone might be reported stolen and coverage stopped.
4. **4.** There may be a slight delay in activation after leaving the dealership from initial delivery.

If, after checking these possibilities, the phone still does not function, do not attempt to repair the phone. Call the cellular phone distributor.

Published: 11-May-2011

Cellular Phone - Cellular PhoneVehicles With: Bluetooth

Diagnosis and Testing

Overview

This section covers the components of the Bluetooth cellular phone system.

For additional information on the Bluetooth cellular phone system : REFER to owner information - Bluetooth telephone system handbook.

Inspection and Verification

• NOTE: **Only cellular phones and software versions featured in the Jaguar Bluetooth approved phones and software list can be guaranteed to operate correctly.**

Before pairing a handset to the Bluetooth phone system make sure that the handbook for the specific handset is available.

1. **1.** Verify the customer concern by operating the system using the customers cellular phone.
2. **2.** Visually inspect for obvious signs of electrical damage.

Visual Inspection Chart

Electrical
• Fuse(s) • Wiring harness • Electrical connector(s) • Bluetooth cellular phone • Microphone • Steering wheel control • Bluetooth upgrade module • Portable support electronics (PSE) module

3. **3.** If an obvious cause for an observed or reported concern is found, correct the cause (if possible) before proceeding to the next step.
4. **4.** Use the approved diagnostic system or a scan tool to retrieve any DTCs before moving onto the symptom chart.
   - Make sure that all DTCs are cleared following rectification.

Symptom Chart

Symptom	Action
"NO PHONE" or "PHONE OFF" message displayed every time the phone mode button is pressed	GO to Pinpoint Test A.
"HANDSET" message displayed every time the phone mode button is pressed and never changes to "SIG*"	GO to Pinpoint Test B.
Unable to pair the handset to telephone system	GO to Pinpoint Test C.
Cannot answer/reject/end the call from the audio head unit/steering wheel control	GO to Pinpoint Test D.
Unable to connect the handset to telephone system	GO to Pinpoint Test E.
Bluetooth connection is dropped	GO to Pinpoint Test F.
Incorrect or no phonebook entries	GO to Pinpoint Test G.
No third party audio	GO to Pinpoint Test H.
No in-vehicle audio	GO to Pinpoint Test I.
No ringing heard through the vehicle speakers	GO to Pinpoint Test J.
Low audio volume	GO to Pinpoint Test K.
Cannot dial out from the audio head unit/steering wheel control	GO to Pinpoint Test L.
Call is dropped	GO to Pinpoint Test M.
Interference and distortion	GO to Pinpoint Test N.
Unable to transfer call between hands free and handset	GO to Pinpoint Test O.

Pinpoint Tests

• NOTE: When performing voltage or resistance tests, always use a digital multimeter (DMM) accurate to three decimal places, and with an up-to-date calibration certificate. When testing resistance always take the resistance of the DMM leads into account.

• NOTE: Inspect connectors for signs of water ingress, and pins for damage and/or corrosion.

• NOTE: If a control module or component is suspect and the vehicle remains under manufacturer warranty, refer to the Warranty Policy and Procedures manual (section B1.2), or determine if any prior approval program is in operation, before the replacement of a component.

PINPOINT TEST A : "NO PHONE" OR "PHONE OFF" MESSAGE DISPLAYED EVERY TIME THE PHONE MODE BUTTON IS PRESSED	
TEST CONDITIONS	**DETAILS/RESULTS/ACTIONS**
A1:	
	1
	Does the display ever display "PHONE"? **Yes** GO to A2. **No** GO to A3.
A2:	
	1
	Are any of the Bluetooth upgrade module connections loose or damaged? **Yes** Reconnect or change the Bluetooth upgrade module connections and check for normal operation. **No** GO to A5.
A3:	

	1
	Check the part number of the portable support electronics (PSE) module. Has the correct part been fitted? **Yes** GO to A4. **No** Replace with correct module and check for normal operation.
A4:	
	1
	Has the correct harness been fitted to the car? **Yes** GO to A5. **No** Replace with the correct phone harness and check for normal operation.
A5:	
	1
	Is power being supplied to the Bluetooth upgrade module? **Yes** Refer to the warranty policy and procedures manual if the Bluetooth upgrade module is suspect. **No** GO to A6.
A6:	
	1
	Are power, ignition and ground being supplied to the portable support electronics (PSE) module? **Yes** Refer to the warranty policy and procedures manual if the PSE module is suspect. **No** Rectify as necessary. Refer to the electrical guides.

PINPOINT TEST B : "HANDSET" MESSAGE DISPLAYED EVERY TIME THE PHONE MODE BUTTON IS PRESSED AND NEVER CHANGES TO "SIG*"

TEST CONDITIONS	DETAILS/RESULTS/ACTIONS
B1:	
	1
	Has the system been paired to a handset? **Yes** Key off ignition and wait 6 minutes for the portable support electronics (PSE) module to shut down. The Bluetooth upgrade module remains active for 6 minutes after the ignition has been switched off. It is important to wait this 6 minutes so that a clean boot-up of the Bluetooth upgrade module is achieved and the correct information is stored. Switch off the paired handset; remove the battery from the back of the handset. Replace the battery into the handset and switch on, make sure the Bluetooth function is on and the handset is within range. Key on ignition. GO to B2. **No** GO to B3.
B2:	
	1
	"HANDSET" message displayed every time the phone mode button is pressed and then drops out of phone mode? **Yes** GO to B3. **No** Problem may have been due to the Bluetooth link being disconnected.
B3:	
	1
	Is the connection between the Bluetooth upgrade module and the phone harness loose? **Yes** Reconnect the Bluetooth upgrade module and check for normal operation. **No** GO to B4.
B4:	
	1
	Are any of the Bluetooth upgrade module pins damaged? **Yes** Refer to the warranty policy and procedures manual if the Bluetooth upgrade module is suspect. **No** Check harness to/from the Bluetooth upgrade module and the portable support electronics (PSE) module.GO to B5.
B5:	
	1
	Is power being supplied to the Bluetooth upgrade module? **Yes** Refer to the warranty policy and procedures manual if the Bluetooth upgrade module is suspect. **No** GO to B6.
B6:	
	1
	Are power, ignition, and ground being supplied to the portable support electronics (PSE) module? **Yes** Refer to the warranty policy and procedures manual if the PSE module is suspect. **No** Rectify as necessary. Refer to the electrical guides.

PINPOINT TEST C : - UNABLE TO PAIR THE HANDSET TO TELEPHONE SYSTEM

TEST CONDITIONS	DETAILS/RESULTS/ACTIONS
C1:	
	1

	Has another handset previously been paired to the system? **Yes** GO to C2. **No** GO to C3.
C2:	
	1
	Is the "NO PHONE" or "PHONE OFF" message displayed or does the system drop out of phone mode? **Yes** Go to '"NO PHONE" or "PHONE OFF"' message displayed - GO to Pinpoint Test A. **No** GO to C3.
C3:	
	1
	Does the audio head unit display "SIG****" or "SIG*****" (The 5th '*' will flash slowly)? **Yes** Retry the pairing process following the 'quick guide information' for the specific handset.GO to C4. **No** Enter the ##3#*# pairing key sequence.GO to C5.
C4:	
	1
	Has the handset paired with the system successfully? ("SIG*" displayed)? **Yes** Problem may have been due to a faulty Bluetooth connection. **No** Key off ignition and wait 6 minutes for the portable support electronics (PSE) module to shut down. The Bluetooth upgrade module remains active for 6 minutes after the ignition has been switched off. It is important to wait this 6 minutes so that a clean boot-up of the Bluetooth upgrade module is achieved and the correct information is stored. Switch off the paired handset; remove the battery from the back of the handset. Replace the battery into the handset and switch on, make sure the Bluetooth function is on and the handset is within range. Key on ignition. GO to C7.
C5:	
	1
	Does the audio head unit display "SIG****" or "SIG*****" (The 5th '*' will flash slowly)? **Yes** Retry the pairing process following the 'quick guide information' for the specific handset. **No** Key off ignition and wait 6 minutes for the portable support electronics (PSE) module to shut down. Key on ignition. GO to C6.
C6:	
	1
	Does the audio head unit display "SIG****" or "SIG*****" (The 5th '*' will flash slowly)? **Yes** Retry the pairing process following the 'quick guide information' for the specific handset. **No** GO to C9.
C7:	
	1
	Has the handset paired with the system successfully? ("SIG*" displayed)? **Yes** Problem may have been due to a faulty Bluetooth connection. **No** Pair and connect a different known 'good' handset to the vehicle phone system. GO to C8.
C8:	
	1
	Has the handset paired with the system successfully? ("SIG*" displayed)? **Yes** Problem may be an issue with the user's handset, consult the handset supplier. **No** GO to C9.
C9:	
	1
	Is the connection between the Bluetooth upgrade module and the phone harness loose? **Yes** Reconnect the Bluetooth upgrade module and check for normal operation. **No** GO to C10.
C10:	
	1
	Is power being supplied to the Bluetooth upgrade module? **Yes** Refer to the warranty policy and procedures manual if the Bluetooth upgrade module is suspect. **No** GO to C11.
C11:	
	1
	Are power, ignition, and ground being supplied to the portable support electronics (PSE) module? **Yes** Refer to the warranty policy and procedures manual if the PSE module is suspect. **No** Rectify as necessary. Refer to the electrical guides.

PINPOINT TEST D : CANNOT ANSWER/REJECT/END THE CALL FROM THE AUDIO HEAD UNIT/STEERING WHEEL CONTROL

TEST CONDITIONS	DETAILS/RESULTS/ACTIONS
D1:	
	1

	Cannot answer the call? **Yes** Read DTCs from the portable support electronics (PSE) module using the approved diagnostic system and rectify as necessary.GO to D3. **No** GO to D2.
D2:	
	1
	Cannot reject/end the call? **Yes** This is a network dependant feature, consult the relevant mobile phone network before continuing. Read DTCs from the portable support electronics (PSE) module using the approved diagnostic system and rectify as necessary.GO to D3. **No** GO to D3.
D3:	
	1
	Can the call be answered/rejected/ended from the handset (with Bluetooth link still connected)? **Yes** GO to D4. **No** Disconnect the Bluetooth link between the handset and vehicle phone system and re-try the call.GO to D5.
D4:	
	1
	Is audio heard during call/call set up? **Yes** Refer to audio head unit diagnostics using the approved diagnostic system. **No** Check wiring between the Bluetooth upgrade module, the portable support electronics (PSE) module, and the audio head unit. Rectify as necessary.
D5:	
	1
	Can the call be answered/rejected/ended from the handset with Bluetooth link disconnected? **Yes** Key off ignition and wait 6 minutes for the portable support electronics (PSE) module to shut down. Switch off the handset; remove the battery from the back of the handset. Replace the battery into the handset and switch on. Key on ignition. Make sure the Bluetooth link is reconnected and re-try the call.GO to D6. **No** This may be a handset issue, consult the handset supplier.
D6:	
	1
	Can the call be answered/rejected/ended from the handset (with Bluetooth link connected)? **Yes** Problem may have been due to the Bluetooth link being inoperative. **No** Pair and connect a different known 'good' handset to the vehicle phone system and make an incoming call.GO to D7.
D7:	
	1
	Can the call be answered/rejected/ended from the handset (with Bluetooth link connected)? **Yes** This may be a handset issue, consult the handset supplier. **No** GO to D8.
D8:	
	1
	Check all connections/connectivity to and from the portable support electronics (PSE) module and the Bluetooth upgrade module. Are any of the harness connections loose or damaged? **Yes** Rectify as necessary. Refer to the electrical guides. **No** Refer to the warranty policy and procedures manual if a module is suspect.

PINPOINT TEST E : UNABLE TO CONNECT THE HANDSET TO TELEPHONE SYSTEM	
TEST CONDITIONS	**DETAILS/RESULTS/ACTIONS**
E1:	
	1
	Was the handset the last device to be connected to the vehicle? **Yes** GO to E2. **No** In the handset Bluetooth menu, delete any existing "Jaguar" devices from the list. Enter the ##3#*# key sequence to initiate the pairing process. Follow pairing process for the specific handset. GO to E6.
E2:	
	1
	In the handset Bluetooth menu, is "Jaguar" listed as a paired device? **Yes** GO to E3. **No** Follow pairing process for the specific handset. GO to E6.
E3:	
	1
	Is the handset 'connected' to another Bluetooth device (i.e. not "Jaguar")? **Yes** Check "Active Devices" in the handset's Bluetooth menu and disconnect the handset from the other Bluetooth device. Follow the instructions for the specific handset to allow the handset to 'connect' to the vehicle.GO to E8. **No** GO to E4.

E4:	
	1
	What message does the vehicle display show, "Connected" or "No BT Phone"? **Yes** Follow the vehicle un-pairing process, delete "Jaguar" from the handset device list and key off ignition for 6 minutes. Key on ignition. Follow the pairing process for the specific handset.GO to E6. **No** GO to E5.
E5:	
	1
	Is the vehicle in "Discover Me" mode? **Yes** Follow pairing process for the specific handset. GO to E6. **No** Go to'"HANDSET IN USE" or "HANDSET"' message displayed - GO to Pinpoint Test B.
E6:	
	1
	Has the handset paired successfully with the vehicle? **Yes** GO to E7. **No** Go to 'Unable to pair' - GO to Pinpoint Test C.
E7:	
	1
	Has the handset automatically connected to the vehicle phone system? **Yes** Following the instructions for the specific handset to make sure that the Bluetooth settings are set for automatic connection, connection should now be complete. **No** Follow the instructions for the specific handset to allow the handset to 'connect' to the vehicle.GO to E8.
E8:	
	1
	Has the handset connected to the vehicle phone system? **Yes** Following the instructions for the specific handset to make sure that the Bluetooth settings are set for automatic connection, connection should now be complete. **No** Key off ignition and wait 6 minutes for the portable support electronics (PSE) module to shut down. Switch off the handset; remove the battery from the back of the handset. Replace the battery into the handset and switch on. Key on ignition. Re-try pairing and connecting. GO to E9.
E9:	
	1
	Has the handset connected to the vehicle phone system? **Yes** Following the instructions for the specific handset to make sure that the Bluetooth settings are set for automatic connection, connection should now be complete. **No** Pair and connect a different known 'good' handset to the vehicle phone system. GO to E10.
E10:	
	1
	Does the handset 'connect' OK? **Yes** This is a handset issue, consult the handset supplier. **No** Refer to the warranty policy and procedures manual if the Bluetooth upgrade module is suspect.

PINPOINT TEST F : BLUETOOTH CONNECTION IS DROPPED	
TEST CONDITIONS	**DETAILS/RESULTS/ACTIONS**
F1:	
	1
	Does the handset battery have a good level of charge? **Yes** GO to F2. **No** Recharge the handset battery. Bluetooth performance cannot be guaranteed with low battery power.
F2:	
	1
	Does the handset show good signal strength? **Yes** GO to F3. **No** Without good signal strength, the vehicle display will show "SIG_____" or "No BT Phone" or "No Service". Move into an area with good signal strength and check for normal operation.
F3:	
	1
	Check the handset menu. Has auto connect been turned on? **Yes** GO to F4. **No** Switch auto connect on and check for normal operation.
F4:	
	1
	Has the user tried to transfer a call from hands free to handset? **Yes** Check the handset guide info, some handsets will not auto reconnect Bluetooth after a handset call. **No** GO to F5.

F5:	
	1
	Does the handset display show that it is connected to the vehicle? **Yes** GO to F7. **No** GO to F6.
F6:	
	1
	Does the vehicle display "SIG_____" or "No BT Phone"? **Yes** Follow instructions for specific handset to 'connect' the handset to vehicle.GO to F10. **No** GO to F7.
F7:	
	1
	Does the vehicle display "SIG*" or "Phone Connected"? **Yes** Bluetooth connection has not been dropped, check for normal operation. **No** Key off ignition and wait 6 minutes for the portable support electronics (PSE) module to shut down. Switch off the handset; remove the battery from the back of the handset. Replace the battery into the handset and switch on. Key on ignition. GO to F8.
F8:	
	1
	Does the vehicle display "SIG*" or "Phone Connected"? **Yes** Check for normal operation. **No** Follow the vehicle un-pairing process, delete "Jaguar" from the handset device list and key off ignition for 6 minutes. Key on ignition. Follow pairing process for the specific handset. GO to F9.
F9:	
	1
	Has the handset paired successfully with the vehicle? **Yes** Follow instructions for specific handset to 'connect' the handset to vehicle.GO to F10. **No** Go to 'Unable to pair' - GO to Pinpoint Test C.
F10:	
	1
	Does the handset 'connect'? **Yes** GO to F11. **No** Go to 'Unable to connect' - GO to Pinpoint Test F.
F11:	
	1
	Does the vehicle display show that it is 'connected'? **Yes** Check for normal operation. **No** Refer to the warranty policy and procedures manual if the Bluetooth upgrade module is suspect.

PINPOINT TEST G : INCORRECT OR NO PHONEBOOK ENTRIES	
TEST CONDITIONS	**DETAILS/RESULTS/ACTIONS**
G1:	
	1
	Check the Jaguar Bluetooth approved phone list guide: Does the handset support phonebook download? **Yes** GO to G2. **No** Advise user that the handset does not support phonebook download.
G2:	
	1
	Is the Bluetooth system paired and connected to a phone handset? **Yes** GO to G3. **No** Pair and connect an approved handset to the vehicle phone system.GO to G2.
G3:	
	1
	Has the user followed vehicle and handset instructions for downloading phonebook? **Yes** GO to G4. **No** Refer to the vehicle handbooks/handset 'quick guide information' regarding phonebook download. Check for normal operation.
G4:	
	1
	After "Downloading the phonebook" has the ignition been switched off for 6 minutes? **Yes** GO to G7. **No** Make sure that the ignition has been switched off for 6 minutes after following process for downloading phonebook. The Bluetooth upgrade module remains active for 6 minutes after the ignition has been switched off. It is important to wait this 6 minutes so that a clean boot-up of the Bluetooth upgrade module is achieved and the correct information is stored. Switch ignition on to prompt the portable support electronics (PSE) module to pull phonebook entries from the

	Bluetooth upgrade module. GO to G5.
G5:	
	1
	Can the user view the phonebook entries on the vehicle display? **Yes** End. **No** GO to G6.
G6:	
	1
	Have two or more handsets been tried? **Yes** GO to G9. **No** Pair and connect a different known 'good' handset which will automatically download the phonebook to the vehicle phone system. GO to G9.
G7:	
	1
	After switching the ignition back on, does the handset connect to the vehicle phone system? **Yes** GO to G8. **No** Reconnect the handset and make sure auto-reconnect is set to on.GO to G7.
G8:	
	1
	Is the phonebook available on the vehicle display? **Yes** End **No** Pair and connect a different known 'good' handset which will automatically download the phonebook to the vehicle phone system.GO to G9.
G9:	
	1
	Is the phonebook available on the vehicle display? **Yes** This is an issue with the user's handset, consult the handset supplier. **No** Refer to the warranty policy and procedures manual if a module is suspect.

PINPOINT TEST H : NO THIRD PARTY AUDIO	
TEST CONDITIONS	**DETAILS/RESULTS/ACTIONS**
H1:	
	1 Check the handset manual and the handset settings to make sure user's speech is routed through the vehicle microphone and not the handset microphone.
	Does 3rd party call audio work with the call in 'handset' mode? **Yes** Check for telephone related DTCs using the approved diagnostic system. Rectify as necessary.GO to H5. **No** GO to H2.
H2:	
	1
	Is there any 3rd party call audio with the handset disconnected from the Bluetooth system? **Yes** Pair and connect a different known 'good' handset to the vehicle phone system and make a call to the 3rd party. GO to H4. **No** Try calling another 3rd party from the handset.GO to H3.
H3:	
	1
	Is there any 3rd party audio? **Yes** Initial audio problem may be due to a fault at 3rd party end. Check by calling them on another number. **No** This may be a handset issue, consult the handset supplier.
H4:	
	1
	Does the 3rd party call audio work with the Bluetooth system? **Yes** This may be a handset issue, consult the handset supplier. **No** Check for telephone related DTCs using the approved diagnostic system. Rectify as necessary.GO to H5.
H5:	
	1
	Is there any 3rd party audio? **Yes** End. **No** Disconnect the Bluetooth link between the handset and vehicle phone system and re-try the call.GO to H6.
H6:	
	1
	Does the 3rd party call audio work with the mobile phone disconnected from the vehicle? **Yes** Re-connect the Bluetooth link between the handset and the vehicle phone system and re-try the call.GO to H8. **No** Switch off the handset, remove the battery from the back of the handset. Replace the battery into the handset and switch on. Make sure the Bluetooth link is disconnected and re-try the call.GO to H7.

H7:	
	1
	Does the 3rd party call audio work with the mobile phone disconnected from the vehicle? **Yes** Problem may be due to a faulty Bluetooth connection. **No** This may be a handset issue, consult the handset supplier.
H8:	
	1
	Does the 3rd party call audio work with the Bluetooth system? **Yes** Problem may be due to a faulty Bluetooth connection. **No** GO to H9.
H9:	
	1
	Does the 3rd party call audio work with the mobile phone in 'handset' mode? **Yes** GO to H10. **No** Key off ignition and wait 6 minutes for the portable support electronics (PSE) module to shut down. Key on ignition. Make sure the Bluetooth link is re-connected and re-try the call pairing and connecting.GO to H14.
H10:	
	1
	Does the vehicle have voice control fitted? **Yes** GO to H11. **No** GO to H12.
H11:	
	1
	Does the voice control pick up commands from the user? **Yes** Check harness connections between the microphone and the portable support electronics (PSE) module are not loose or damaged.GO to H16. **No** Refer to the warranty policy and procedures manual if the voice control module is suspect.
H12:	
	1
	Is the vehicle a USA/Canada/Mexico vehicle? **Yes** GO to H13. **No** Check harness connections between the microphone and the portable support electronics (PSE) module are not loose or damaged.GO to H16.
H13:	
	1
	Does the vehicle have the voice control shorting loop fitted? **Yes** Check harness connections between the microphone and the portable support electronics (PSE) module are not loose or damaged.GO to H16. **No** Fit the voice control shorting loop and check for normal operation.
H14:	
	1
	Does the 3rd party call audio work with the Bluetooth system? **Yes** Problem may be due to a faulty Bluetooth connection. **No** Pair and connect a different known 'good' handset to the vehicle phone system and make an incoming call.GO to H15.
H15:	
	1
	Does the 3rd party call audio work with the Bluetooth system? **Yes** This may be a handset issue, consult the handset supplier. **No** Check harness connections between the microphone and the portable support electronics (PSE) module are not loose or damaged.GO to H16.
H16:	
	1
	Are the microphone harness connections damaged? **Yes** Rectify as necessary. Refer to the electrical guides. **No** Replace the microphone and re-try the call. GO to H17.
H17:	
	1
	Does the 3rd party call audio work with the Bluetooth system? **Yes** Problem may have been due to a faulty microphone. **No** Refer to the warranty policy and procedures manual if a module is suspect.

PINPOINT TEST I : NO IN-VEHICLE AUDIO	
TEST CONDITIONS	**DETAILS/RESULTS/ACTIONS**
I1:	

	1
	Can the audio sources be heard through the vehicle speakers e.g. radio? **Yes** GO to I2. **No** Check D2B connections are not loose or damaged. Reconnect/change/repair the D2B leads and check for normal operation.
I2:	
	1
	Can the call be heard when transferred to the handset? **Yes** Key off ignition and wait 6 minutes for the portable support electronics (PSE) module to shut down. Key on ignition. Make sure the Bluetooth link is reconnected and re-try the call. GO to I3. **No** Disconnect the Bluetooth link between the handset and vehicle phone system and re-try the call. GO to I4.
I3:	
	1
	Can the audio be heard through the vehicle speakers? **Yes** The audio problem may have been due to the Bluetooth link being disconnected. **No** Pair and connect a different known 'good' handset to the vehicle phone system and make a call to the 3rd party. GO to I7.
I4:	
	1
	Does the handset audio work with mobile phone disconnected from the vehicle? **Yes** Key off ignition and wait 6 minutes for the portable support electronics (PSE) module to shut down. Key on ignition. Switch off the handset; remove the battery from the back of the handset. Replace the battery into the handset and switch on. Key on ignition. Make sure the Bluetooth link is reconnected and re-try the call. GO to I6. **No** Try calling another 3rd party from the handset. GO to I5.
I5:	
	1
	Is there any call audio on the handset? **Yes** Initial audio problem may be due to a fault at the 3rd party end, check by calling them on another number. **No** This may be a handset issue, consult the handset supplier.
I6:	
	1
	Can the audio be heard through the vehicle speakers? **Yes** The audio problem may have been due to the Bluetooth link being disconnected. **No** Pair and connect a different known 'good' handset to the vehicle phone system and make a call to the 3rd party.GO to I7.
I7:	
	1
	Can the audio be heard through the vehicle speakers? **Yes** This may be a handset issue, consult the handset supplier. **No** Check harness connections between the Bluetooth upgrade module and the portable support electronics (PSE) module. GO to I8.
I8:	
	1
	Are any of the harness connections damaged? **Yes** Rectify as necessary. Refer to the electrical guides. **No** Refer to the warranty policy and procedures manual if a module is suspect.

PINPOINT TEST J : NO RINGING HEARD THROUGH THE VEHICLE SPEAKERS	
TEST CONDITIONS	**DETAILS/RESULTS/ACTIONS**
J1:	
	1
	When there is no call in progress, and the audio source is changed, is any audio heard e.g. from radio? **Yes** GO to J3. **No** Check D2B connections are not loose and that all nodes are connected on the D2B ring. Rectify as necessary.GO to J2.
J2:	
	1
	Are any of the D2B connections damaged? **Yes** Change/repair the D2B leads and check for normal operation. **No** Call Technical Helpline.
J3:	
	1
	Is the vehicle phone system volume set to more than 15? **Yes** GO to J4. **No** Make sure that the vehicle phone system is set to more than 15 and retry the call.

J4:	
	1
	Is the message "incoming call" displayed? **Yes** GO to J5. **No** GO to J6.
J5:	
	1
	On answering the incoming call using the vehicle controls, can the 3rd party be heard through the vehicle speakers? **Yes** GO to J6. **No** Go to 'No in-vehicle audio' - GO to Pinpoint Test I.
J6:	
	1
	Is there any ringing heard on the handset with the Bluetooth link connected? **Yes** GO to J7. **No** GO to J10.
J7:	
	1
	Does the handset support in-band ringing or send its ringing status to the Bluetooth upgrade module? **Yes** Key off ignition and wait 6 minutes for the portable support electronics (PSE) module to shut down. Key on ignition. Make sure the Bluetooth link is re-connected and re-try the call. GO to J8. **No** This is a handset issue, contact the handset supplier or replace with another handset from the approved list.
J8:	
	1
	Can any ringing be heard through the vehicle speakers? **Yes** The audio problem may have been due to the Bluetooth link being disconnected. **No** Un-pair the current handset and pair/connect a known good handset with the vehicle. Make an incoming call. GO to J9.
J9:	
	1
	Can any ringing be heard through the vehicle speakers? **Yes** Contact the handset supplier, the handset may be faulty. **No** GO to J10.
J10:	
	1
	Is the message "incoming call" displayed? **Yes** Check the handset instructions to find "profile" settings.GO to J14. **No** GO to J11.
J11:	
	1
	Does the handset have good signal strength? **Yes** Disconnect the Bluetooth connection. Make sure the handset is not set to silent. Then make an incoming call. GO to J12. **No** Move into area where the handset receives good signal strength. Make an incoming call and check for normal operation.
J12:	
	1
	Is there any ringing heard on the handset with the Bluetooth link disconnected? **Yes** Reconnect the Bluetooth connection, and then make an incoming call. GO to J13. **No** Contact the handset supplier, the handset may be faulty.
J13:	
	1
	Can any ringing be heard through the vehicle speakers? **Yes** Problem due to a faulty Bluetooth link. **No** GO to J4.
J14:	
	1
	Has the handset "profile" been set to "silent"? **Yes** Change settings within profile, make an incoming call and check for normal operation. **No** GO to J15.
J15:	
	1
	Has the handset volume been set to minimum? **Yes** Increase volume setting, make an incoming call and check for normal operation. **No** Check Bluetooth connection between the handset and vehicle is OK. GO to J16.

J16:	
	1
	Is the Bluetooth connection OK? **Yes** Disconnect the Bluetooth connection. Make sure that the handset is NOT set to silent, then make an incoming call.GO to J17. **No** Follow the handset instructions for 'connecting' the Bluetooth link, then make an incoming call and check for normal operation.
J17:	
	1
	Is there any ringing heard on the handset? **Yes** Reconnect Bluetooth link between the handset and vehicle.GO to J18. **No** Un-pair the current handset and pair/connect a known good handset with the vehicle. Make an incoming call. GO to J9.
J18:	
	1
	Can any ringing be heard through the vehicle speakers? **Yes** Change settings within profile, make an incoming call and check for normal operation. **No** Check harness connections between the Bluetooth upgrade module and the portable support electronics (PSE) module.GO to J19.
J19:	
	1
	Are any of the harness connections damaged? **Yes** Rectify as necessary. Refer to the electrical guides. **No** Refer to the warranty policy and procedures manual if a module is suspect.

PINPOINT TEST K : LOW AUDIO VOLUME

TEST CONDITIONS	DETAILS/RESULTS/ACTIONS
K1:	
	1
	Low volume in vehicle (rather than at 3rd party)? **Yes** GO to K2. **No** If volume is low at 3rd party.GO to K9.
K2:	
	1
	Is the vehicle phone volume set at 12 or above? **Yes** Check fade & balance are both set at '0' or mid point on slider controls. GO to K3. **No** Increase phone volume to above 12. GO to K1.
K3:	
	1
	Is radio volume OK? **Yes** GO to K4. **No** Call Technical Helpline.
K4:	
	1
	Is Bluetooth link between the handset and vehicle still connected? **Yes** GO to K5. **No** Re-connect the Bluetooth link and re-try the call.GO to K1.
K5:	
	1
	Is the call volume still low when the call transferred to 'handset' mode? **Yes** GO to K6. **No** Key off ignition and wait 6 minutes for the portable support electronics (PSE) module to shut down. Key on ignition and re-try the call. GO to K16.
K6:	
	1
	Is the call volume still low with the handset disconnected from the Bluetooth system? **Yes** GO to K7. **No** Try calling another 3rd party from the handset.GO to K8.
K7:	
	1
	Is the handset volume setting low? **Yes** Increase the handset volume setting and re-try the call.GO to K6. **No** Low audio issue due to the handset, consult the handset supplier.
K8:	

	1
	Is the call volume still low with the handset disconnected from the Bluetooth system? **Yes** Low audio issue due to the handset, consult the handset supplier. **No** Initial audio problem may be due to a fault at the 3rd party end. Check by calling them on another number.
K9:	
	1
	Check that the handset volume setting and signal strength are not low. Is the call volume still low when the call is transferred to 'handset' mode? **Yes** GO to K14. **No** GO to K10.
K10:	
	1
	Is the microphone fitted OK? Check DTCs using the approved diagnostic system. **Yes** GO to K12. **No** Rectify as necessary.GO to K11.
K11:	
	1
	Is volume still low? **Yes** GO to K12. **No** Issue caused by faulty microphone or microphone circuit.
K12:	
	1
	Is voice control fitted to vehicle? **Yes** Disconnect the voice control module and fit the voice control shorting loop to the wiring harness.GO to K13. **No** GO to K14.
K13:	
	1
	Is volume still low? **Yes** GO to K14. **No** Refer to voice control diagnostics.
K14:	
	1
	Is the 3rd party call audio still low with the handset disconnected from the Bluetooth system? **Yes** Pair and connect a different known 'good' handset to the vehicle phone system and make a call to a 3rd party.GO to K17. **No** Re-connect Bluetooth link and re-try the call.GO to K15.
K15:	
	1
	Is volume still low? **Yes** Key off ignition and wait 6 minutes for the portable support electronics (PSE) module to shut down. Key on ignition and re-try the call.GO to K16. **No** Issue caused by a faulty Bluetooth connection.
K16:	
	1
	Is volume still low? **Yes** Refer to the warranty policy and procedures manual if a module is suspect. **No** Issue caused by a faulty Bluetooth connection.
K17:	
	1
	Is volume still low? **Yes** Refer to the warranty policy and procedures manual if a module is suspect. **No** Low audio issue caused by the handset, consult the handset supplier.

PINPOINT TEST L : CANNOT DIAL OUT FROM THE AUDIO HEAD UNIT/STEERING WHEEL CONTROL	
TEST CONDITIONS	**DETAILS/RESULTS/ACTIONS**
L1:	
	1
	Is D2B ring complete? **Yes** GO to L2. **No** Reconnect/change/repair the D2B leads and check for normal operation.
L2:	
	1

	Does display show "NO SERVICE" or drop out of phone mode? **Yes** GO to L3. **No** GO to L4.
L3:	
	1
	Signal strength on the handset greater than 1? **Yes** GO to L4. **No** Re-try the call in a stronger signal strength area, low signal strength can cause interference and distortion in car and at 3rd party.
L4:	
	1
	Can user dial out from the handset? **Yes** Key off ignition and wait 6 minutes for the portable support electronics (PSE) module to shut down. Key on ignition. Make sure the Bluetooth link is reconnected and re-try the call.GO to L5. **No** Switch off the handset, remove the battery from the back of the handset. Replace the battery into the handset and switch on. Make sure the Bluetooth link is reconnected and re-try the call.GO to L5.
L5:	
	1
	Can user dial out from audio head unit or steering wheel control? **Yes** Problem may have been caused by the Bluetooth link being disconnected. **No** Pair and connect a different known 'good' handset to the vehicle phone system and make an incoming call.GO to L6.
L6:	
	1
	Can user dial out from audio head unit or steering wheel control? **Yes** This may be a handset issue, consult the handset supplier. **No** Refer to the warranty policy and procedures manual if a module is suspect.

PINPOINT TEST M : CALL IS DROPPED	
TEST CONDITIONS	**DETAILS/RESULTS/ACTIONS**
M1:	
	1
	Is the 3rd party call to another cellular phone? **Yes** GO to M3. **No** GO to M2.
M2:	
	1
	Is the 3rd party call to a landline? **Yes** Disconnect the Bluetooth link between the handset and vehicle phone system. Re-try the call in the vehicle, preferably with the handset in the same position as when connected via the Bluetooth link. GO to M4. **No** GO to M5.
M3:	
	1
	Is the signal strength on the 3rd party handset greater than 1? **Yes** Disconnect the Bluetooth link between the handset and vehicle phone system. Re-try the call in the vehicle, preferably with the handset in the same position as when connected via the Bluetooth link. GO to M4. **No** Re-try the call in stronger signal strength area. Low signal strength can lead to calls being dropped.
M4:	
	1
	Is the call dropped again? **Yes** Pair and connect a different known 'good' handset to the vehicle phone system and make an incoming call. GO to M7. **No** Switch off the handset, remove the battery from the back of the handset. Replace the battery into the handset and switch on. Make sure the Bluetooth link is reconnected and re-try the call.GO to M5.
M5:	
	1
	Is the call dropped again? **Yes** Key off ignition and wait 6 minutes for the portable support electronics (PSE) module to shut down. Key on ignition. Make sure the Bluetooth link is reconnected and re-try the call.GO to M6. **No** Problem may have been caused by the Bluetooth link being disconnected.
M6:	
	1
	Is the call dropped again? **Yes** Pair and connect a different known 'good' handset to the vehicle phone system and make an incoming call.GO to M7. **No** Problem may have been caused by the Bluetooth link being disconnected.
M7:	
	1

	Is the call dropped again? **Yes** Refer to the warranty policy and procedures manual if a module is suspect. **No** This may be a handset issue, consult the handset supplier.

PINPOINT TEST N : INTERFERENCE AND DISTORTION	
TEST CONDITIONS	**DETAILS/RESULTS/ACTIONS**
N1:	
	1
	Is interference present with Bluetooth link disconnected? **Yes** GO to N2. **No** Check for external sources of interference. Drive to where the customer has problems to identify if location dependant. Test in an area of known high signal strength.GO to N4.
N2:	
	1
	Is it present with a different known 'good' handset paired/connected? **Yes** GO to N3. **No** This may be a handset issue, consult the handset supplier.
N3:	
	1
	Is it present with other network carriers? **Yes** Check for external sources of interference. Drive to where the customer has problems to identify if location dependant. Test in an area of known high signal strength.GO to N4. **No** This may be a network or handset issue, consult the handset supplier/network provider.
N4:	
	1
	Are there any powered items/aftermarket accessories in the car? **Yes** Switch off any powered items/aftermarket accessories in the car.GO to N5. **No** Refer to the warranty policy and procedures manual if a module is suspect.
N5:	
	1
	Is interference still present? **Yes** Refer to the warranty policy and procedures manual if a module is suspect. **No** User to be advised of interference from aftermarket accessories.

PINPOINT TEST O : UNABLE TO TRANSFER CALL BETWEEN HANDS FREE AND HANDSET	
TEST CONDITIONS	**DETAILS/RESULTS/ACTIONS**
O1:	
	1
	Does the specific handset guide state that the handset does not support call transfer? **Yes** Advise user that some software levels are not guaranteed to function correctly. Software to be changed to approved level or the handset to be changed. **No** Switch off the handset, remove the battery from the back of the handset. Replace the battery into the handset and switch on. Make sure the Bluetooth link is reconnected and re-try the call.GO to O2.
O2:	
	1
	Can the call be transferred between hands free and the handset? **Yes** Problem may have been caused by the Bluetooth link being disconnected. **No** Key off ignition for 6 minutes for the portable support electronics (PSE) module to shut down. Key on ignition and re-try the call.GO to O3.
O3:	
	1
	Can the call be transferred between hands free and the handset? **Yes** Problem may have been caused by the Bluetooth link being disconnected. **No** Pair and connect a different known 'good' handset to the vehicle phone system and make an incoming call. GO to O4.
O4:	
	1
	Can the call be transferred between hands free and handset? **Yes** This is a handset issue, consult the handset supplier. **No** Refer to the warranty policy and procedures manual if a module is suspect.

Cellular Phone - Bluetooth Module

Removal and Installation

Removal

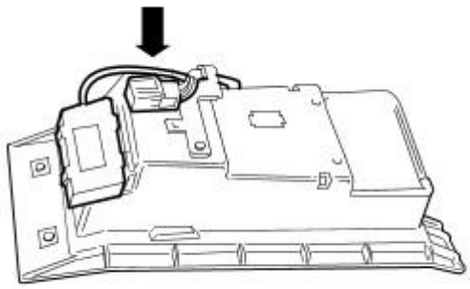

E74337

1. Remove the floor console stowage compartment.
   For additional information, refer to: Floor Console Stowage Compartment (501-12 Instrument Panel and Console, Removal and Installation).
2. Remove the Bluetooth module.
   - Detach the Bluetooth module electrical connector.

Installation

1. To install, reverse the removal procedure.

Cellular Phone - Cellular Phone Antenna

Removal and Installation

Removal

1. Remove the left hand side luggage compartment side trim panel. For additional information, refer to Section 501-05 Interior Trim and Ornamentation.
2. Detach the adhesive tape and disconnect the cellular phone antenna connector.

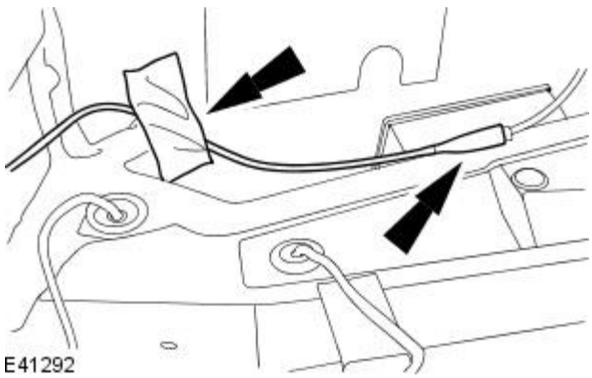

3. Detach the adhesive tape.

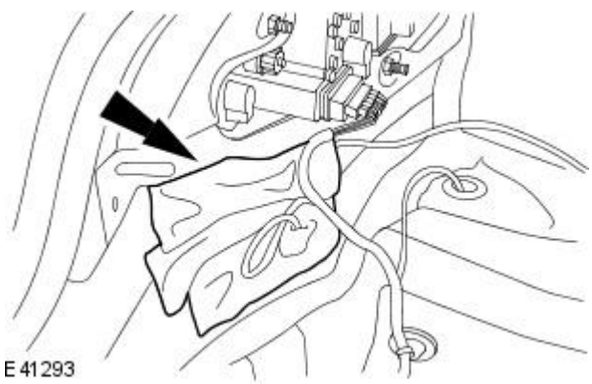

4. Detach the cellular phone antenna sealing grommet.

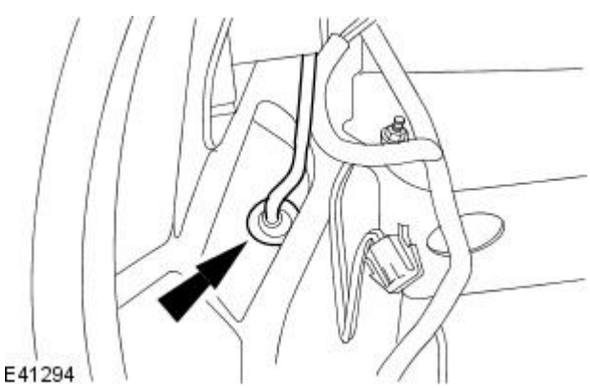

5. Remove the cellular phone antenna.
   1. Remove and discard the tie straps.
   2. Remove the cellular phone antenna.

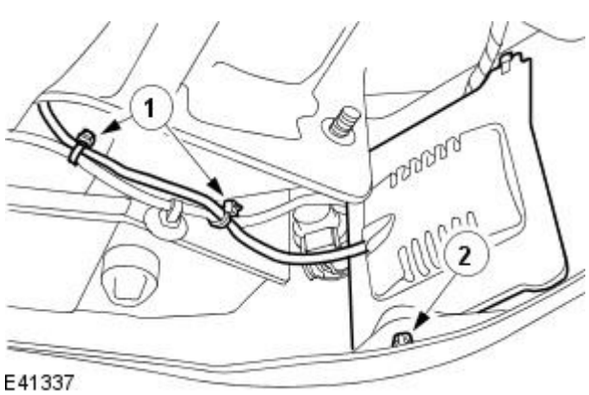

Installation

1. NOTE: Install new tie straps.

   To install, reverse the removal procedure.

Cellular Phone - Transceiver Module

Removal and Installation

Removal

1. Remove the rear seat backrest.
   For additional information, refer to Section 501-10 Seating.
2. Disconnect the transceiver module electrical connectors.

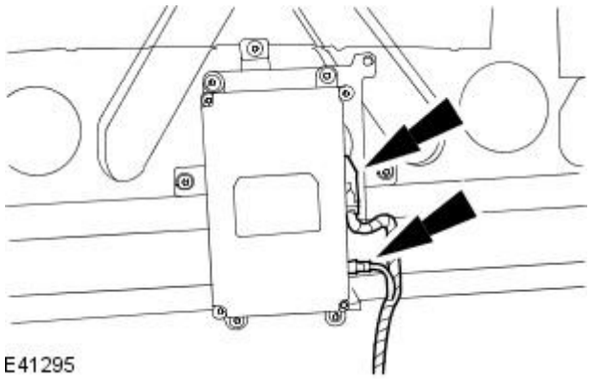

E41295

3. Remove the transceiver module.

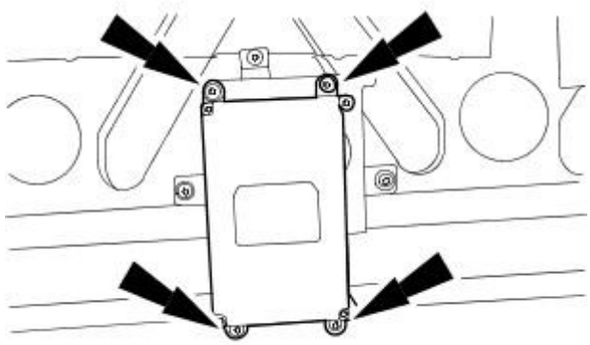

E41296

Installation

1. To install, reverse the removal procedure.

Multifunction Electronic Modules - Anti-Theft Alarm and Double Locking Module

Removal and Installation

Removal

1. Disconnect the battery ground cable.
   For additional information, refer to: Battery Disconnect and Connect (414-01 Battery, Mounting and Cables, General Procedures).
2. Detach the battery junction box (BJB) housing assembly.

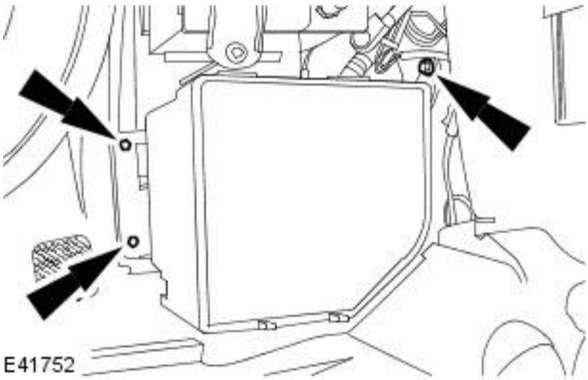

3. Reposition the BJB housing assembly.

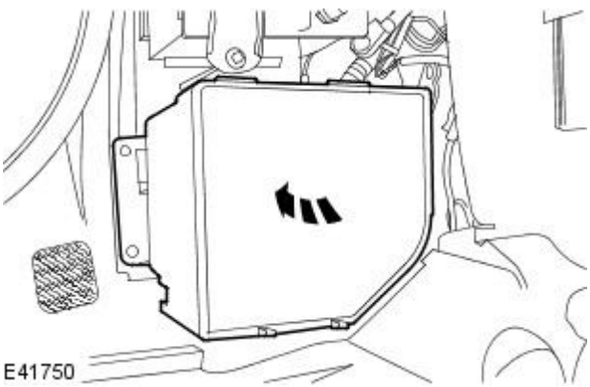

4. Detach the anti-theft alarm and double locking module.

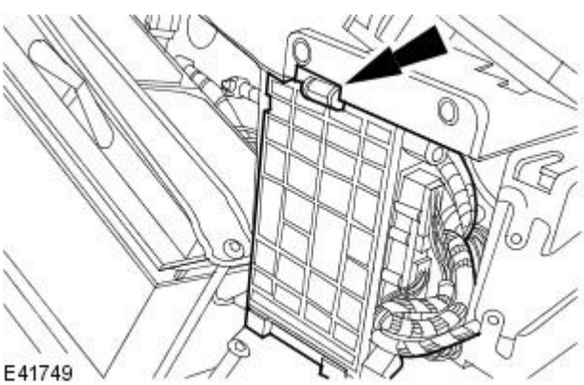

5. Disconnect the anti-theft antenna cable.

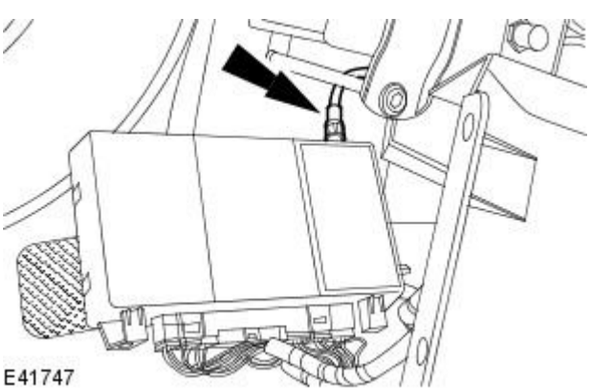

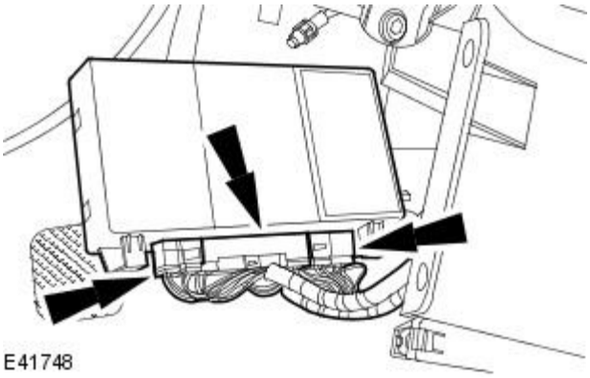

6. Remove the anti-theft alarm and double locking module.

- Disconnect the electrical connectors.

Installation

1. To install, reverse the removal procedure.

Multifunction Electronic Modules - Driver Door Module (DDM)

Removal and Installation

Removal

1. Open the driver's door, or both doors if necessary, to allow the side windows to drop. Ensure that the doors remain open until after the battery has been disconnected.
2. Disconnect the battery ground cable.
   - Remove the battery cover.

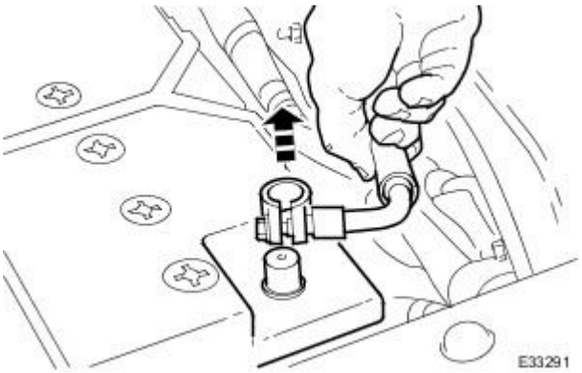

3. Remove the trim pad from the door; refer to Section 501-05.
4. Remove the door speaker from the door.
   1. Remove the four bolts which secure the speaker.

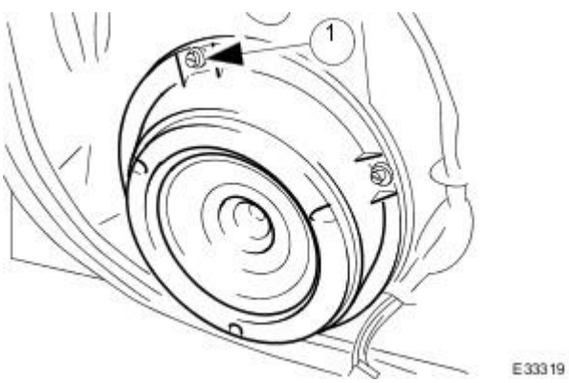

5. Disconnect and remove the speaker.
   1. Support the speaker, disconnect the multi-plug and remove the speaker.

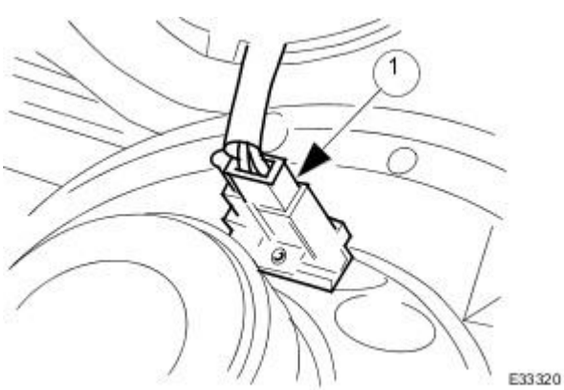

6. Disconnect the door module.
   1. Remove the three screws which secure the module to the door.
   - Reposition the module outwards through the speaker aperture.

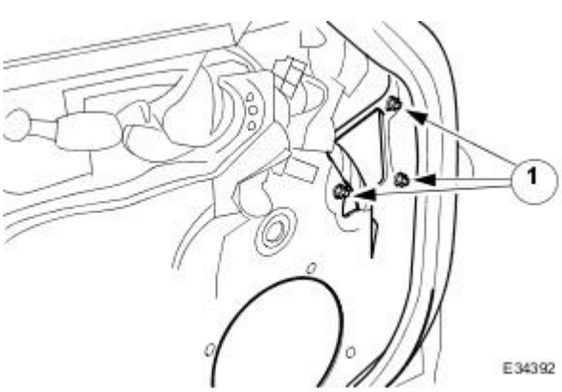

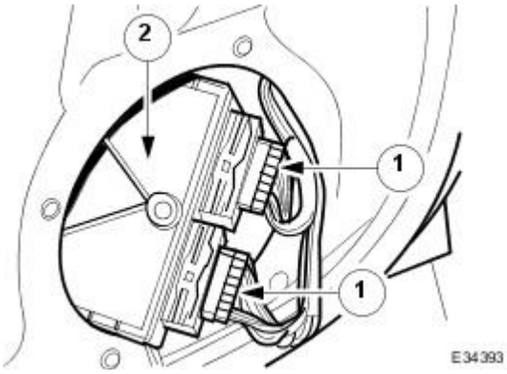

7. Disconnect the harness from the module.

1. Disconnect the two multi-plugs.
2. Remove the module.

8. If necessary remove the foam gasket from the module; note that a new gasket must be fitted when installing a new module.

Installation

1. Installation is the reverse of removal.

2. Perform the Battery Reconnection Procedure described in Section 414-01.

Multifunction Electronic Modules - Driver Seat Module (DSM)

Removal and Installation

Removal

1. Disconnect the battery ground cable.
   For additional information, refer to Section 414-01 Battery, Mounting and Cables.
2. Detach the driver seat module (DSM) and mounting bracket.

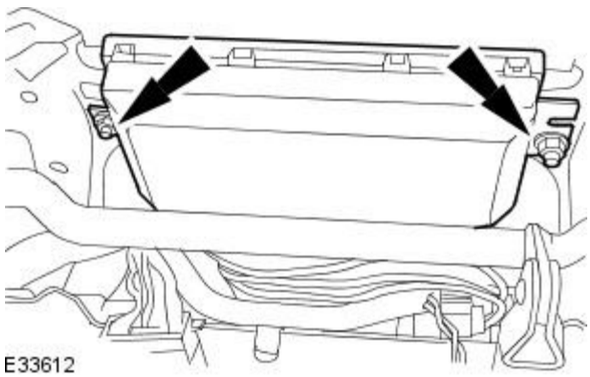

E33612

3. Remove the DSM and mounting bracket.
   - Disconnect the electrical connectors.

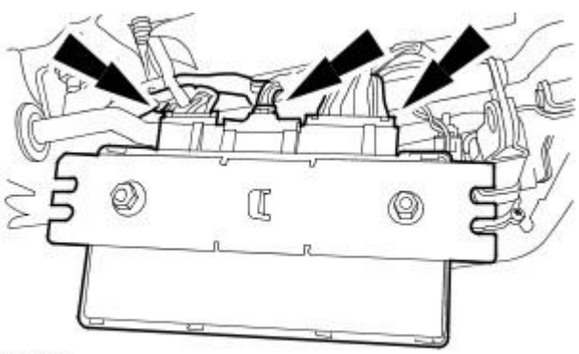

E33613

4. Remove the DSM

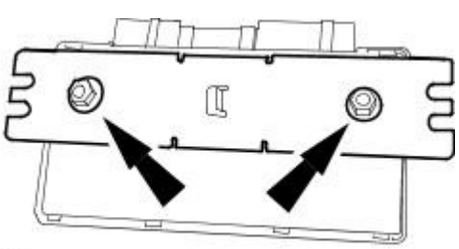

E33614

Installation

1. To install, reverse the removal procedure.
   - Tighten to 7 Nm.

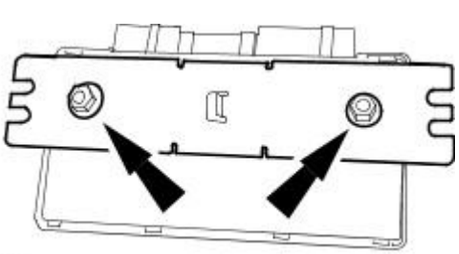

E33614

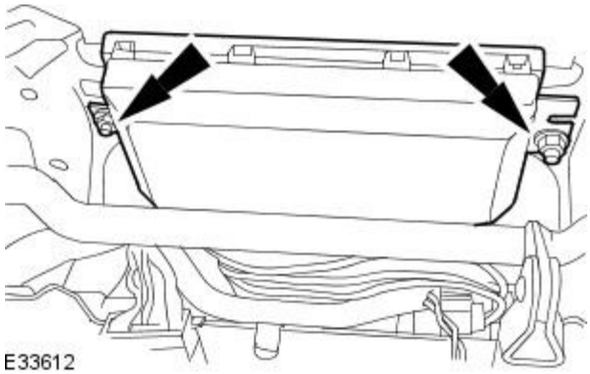

2. Tighten to 4 Nm.

3. Carry out the battery reconnection procedure.
For additional information, refer to Section 414-01 Battery, Mounting and Cables.

Multifunction Electronic Modules - Multifunction Electronic Module

Removal and Installation

Removal

1. Disconnect the battery ground cable.
   For additional information, refer to Section 414-01 Battery, Mounting and Cables.
2. Remove the passenger side register duct.

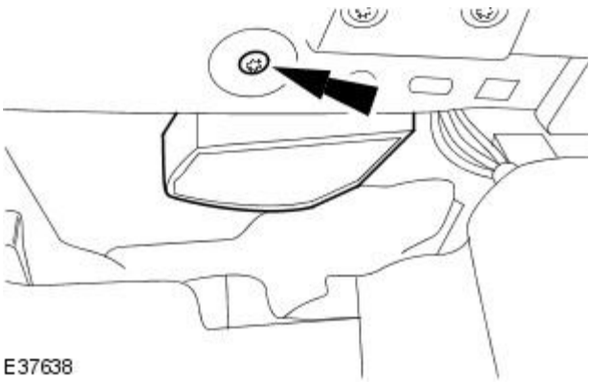

E37638

3. Remove the glove compartment shelf.

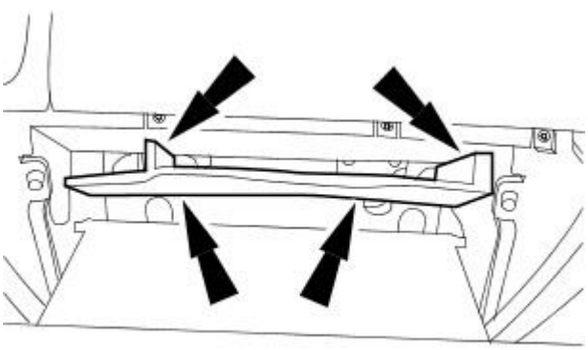

E37637

4. Disconnect the multifunction electronic module electrical connector.

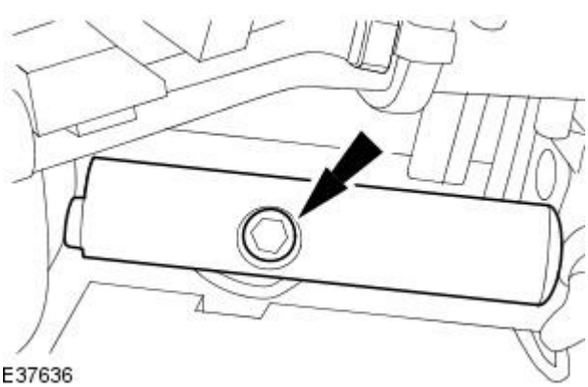

E37636

5. NOTE: Glove compartment shown removed for clarity.

   Remove the multifunction electronic module.

   1. Remove the three nuts which secure the module to the instrument panel.
   2. Remove the multifunction electronic module.

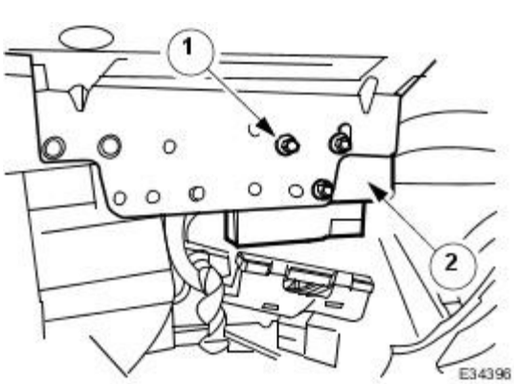

Installation

1. To install, reverse the removal procedure.
2. Connect the battery ground cable.
   For additional information, refer to Section 414-01 Battery, Mounting and Cables.

Multifunction Electronic Modules - Passenger Door Module (PDM)

Removal and Installation

Removal

1. Open the driver's door, or both doors if necessary, to allow the side windows to drop. Ensure that the doors remain open until after the battery has been disconnected.
2. Disconnect the battery ground cable.
   - Remove the battery cover.

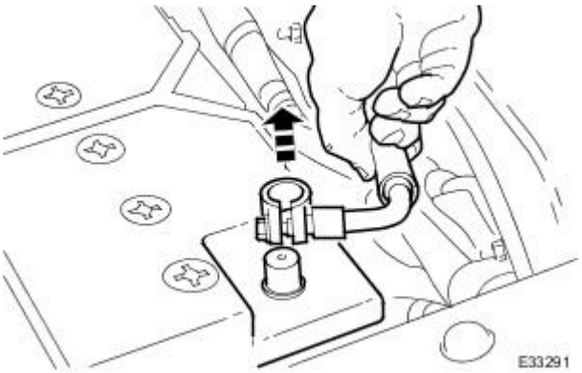

3. Remove the trim pad from the door; refer to Section 501-05.
4. Remove the door speaker from the door.
   1. Remove the four bolts which secure the speaker.

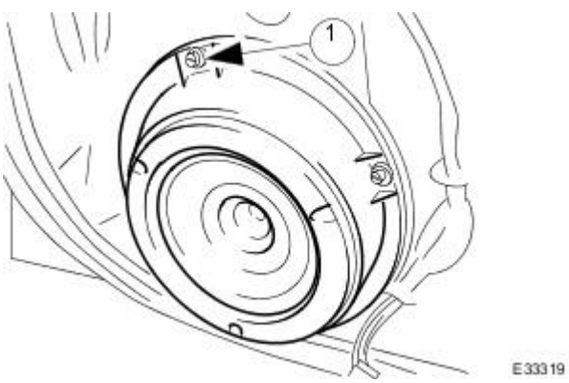

5. Disconnect and remove the speaker.
   1. Support the speaker, disconnect the multi-plug and remove the speaker.

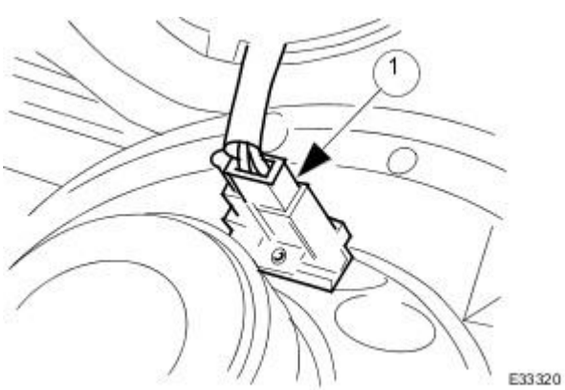

6. Disconnect the door module.
   1. Remove the three screws which secure the module to the door.
   - Reposition the module outwards through the speaker aperture.

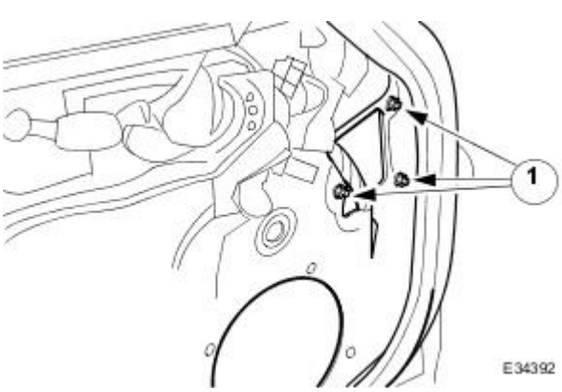

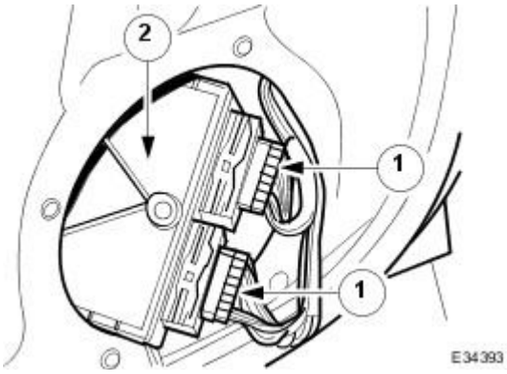

7. Disconnect the harness from the module.

1. Disconnect the two multi-plugs.
2. Remove the module.

8. If necessary remove the foam gasket from the module; note that a new gasket must be fitted when installing a new module.

Installation

1. Installation is the reverse of removal.

2. Perform the Battery Reconnection Procedure described in Section 414-01.

Multifunction Electronic Modules - Passenger Seat Module (PSM)

Removal and Installation

Removal

1. Disconnect the battery ground cable.
   For additional information, refer to Section 414-01 Battery, Mounting and Cables.
2. Detach the passenger seat module (PSM) and mounting bracket.

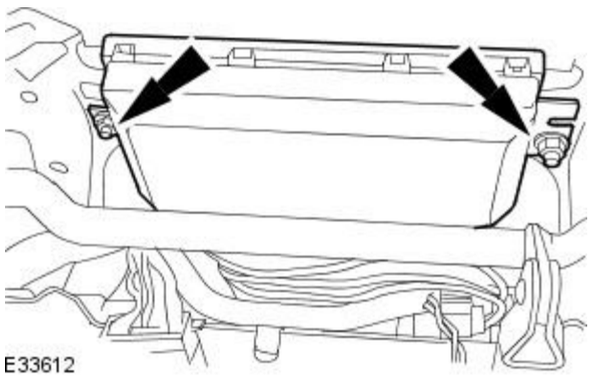

E33612

3. Remove the PSM and mounting bracket.
   - Disconnect the electrical connectors.

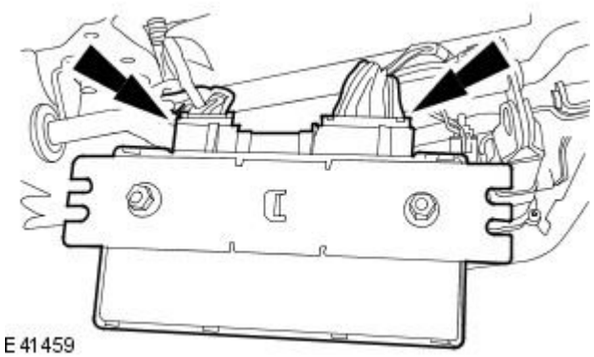

E41459

4. Remove the PSM.

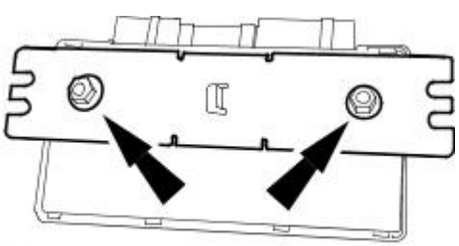

E33614

Installation

1. To install, reverse the removal procedure.
   - Tighten to 7 Nm.

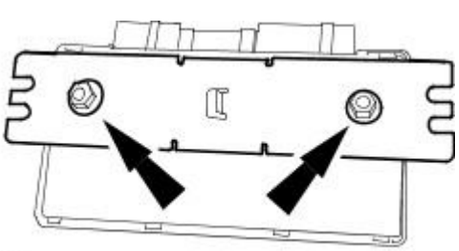

E33614

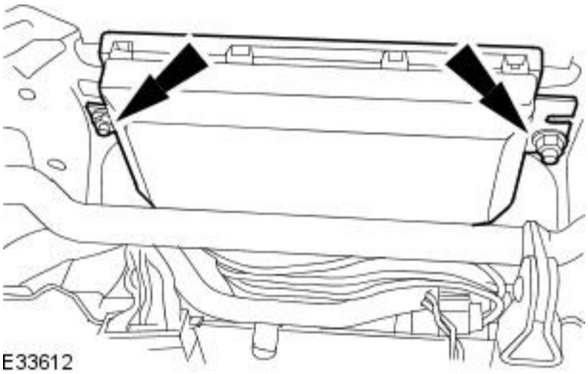

2. Tighten to 4 Nm.

Body System - General Information - Body

Description and Operation

Convertible Body Style

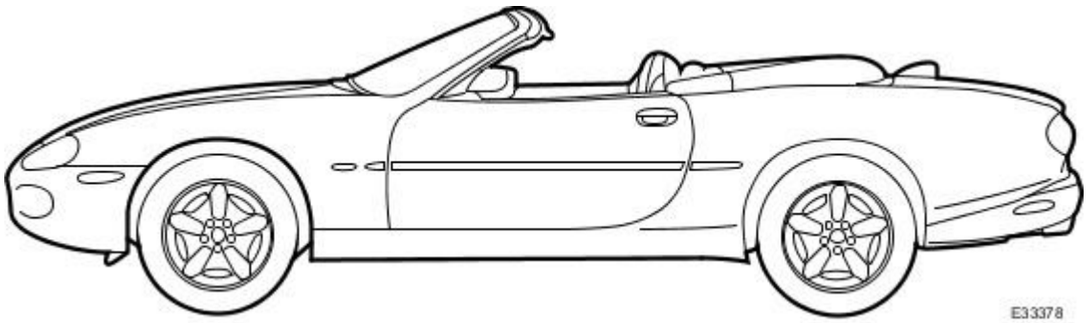

XK8 is produced in two door coupe and convertible styles.

The convertible body style is a cut-down version of the coupe with tubular internal sill reinforcements and additional structure to suit.

Front

Front Bumper and Undertray

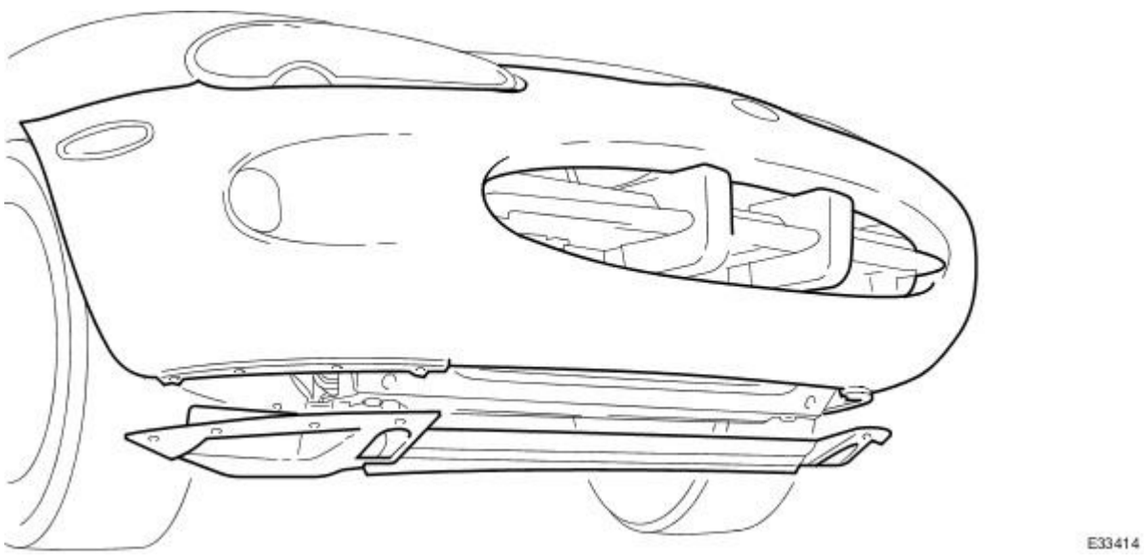

The hood is hinged at the front and supported by two non-locking gas struts when open. Hood release is by a lever located at the LHS 'A' post.

The front bumper beam is in a GMT material or aluminum for N. American markets, and covered in polyurethane. N. American models also have energy absorbing strut mountings. Valance reinforcement is provided for front fender mounting.

The front fenders are common parts to both coupe and convertible. A chrome-plated splitter vane with twin polyurethane overriders is installed in the front air intake of normally aspirated vehicles. On supercharged vehicles (XKR), a chromed mesh grill is installed in the front air intake.

The front fenders carry Jaguar badges and direction indicator repeaters. A single front towing eye stored in the trunk, screws in to either the left- or right-hand side of the lower cross member.

Center

Fascia and Center Console

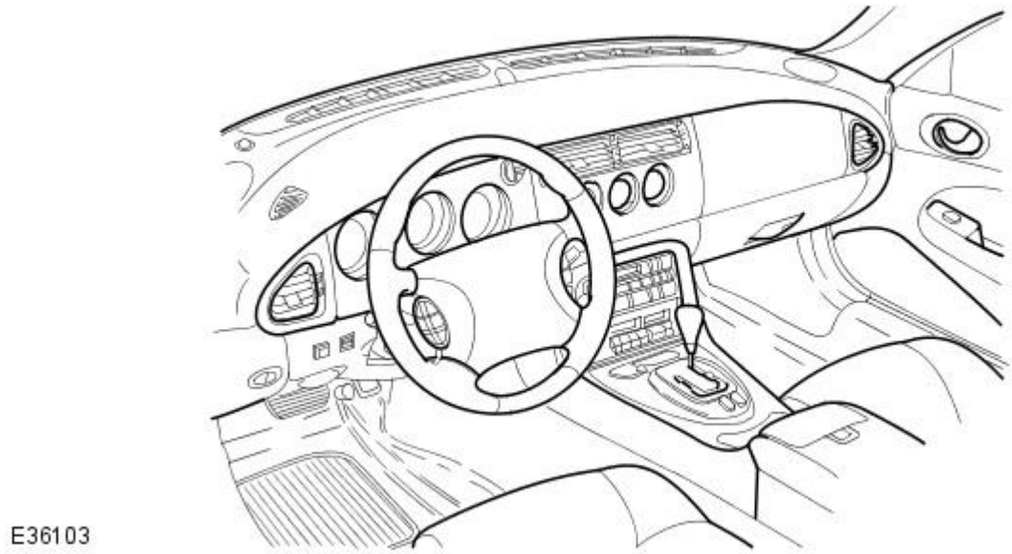

The full width injection moulded fascia matches the 'A' posts and windshield valance assembly. Faced with a walnut burr veneer, it houses instrument panels appropriate to the market, and air conditioning vents

The toeboard supports the steering column and air conditioning unit casing.

Convertible and Coupe Bodyshells

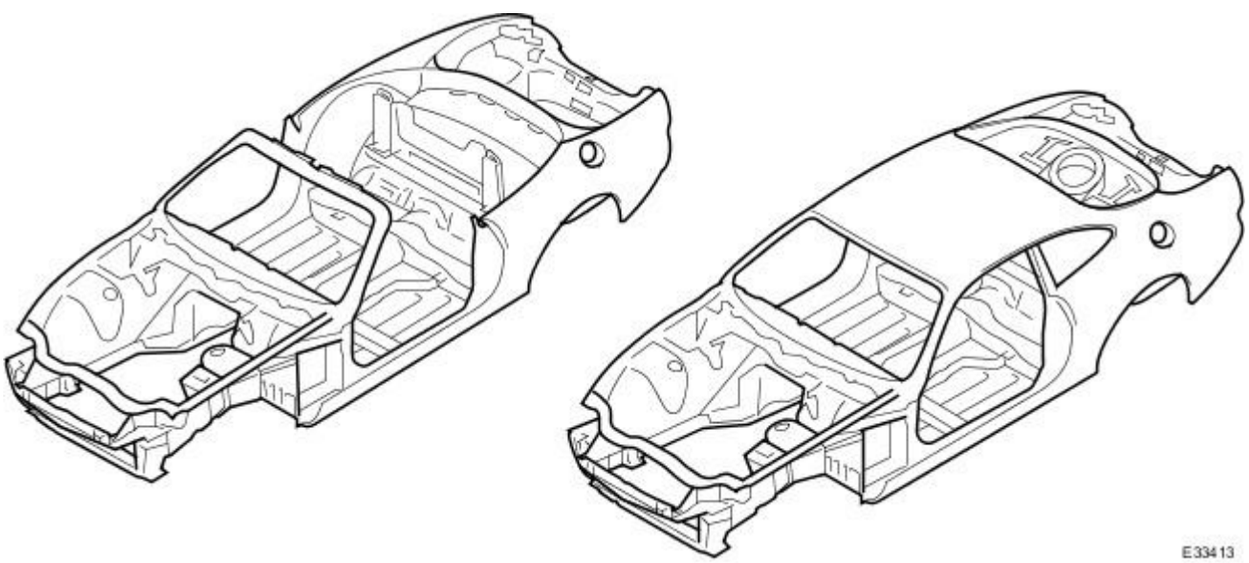

For added rigidity, convertibles have internal sill reinforcing tubes and a tubular brace is installed between each BC post and the rear seat squab panel.

'A' post inners support the windshield and body side assemblies. The coupe body sides are one-piece assemblies each incorporating part of the outer sill, 'A' and 'B' posts and cantrail reinforcement and are joined to the rear tonneau.

The convertible has cropped coupe monosides with the outer wheel arches bonded to the tonneau. Both treadplates are bright finish with the car designation, Jaguar XK8, inscription added. To accommodate the folded top, the convertible rear seats are of a dedicated design and are not interchangeable with the coupe seats.

A one-piece soft tonneau cover, color keyed to the vehicle interior and secured by two Tenax fasteners, two velcro pads and two press studs, is retained by the trunk lid when in place. It is stowed in a bag on the front face of the trunk.

The coupe rear parcel shelf is trimmed in headlining cloth. It has provision for air extraction and has child seat anchorage points. For some markets, the rear parcel shelf also incorporates a high mounted stop light cover. Acoustic cloth covered speakers, courtesy lamps, integral armrests and stowage trays are incorporated in the coupe one-piece, moulded rear quarter casing.

The convertible rear quarter casing is similar to the coupe but does not have armrests fitted. The body has two-piece, LHS and RHS, carpets joined at the center console. Single color moulded carpets are fitted to the trunk. The coupe roof is trimmed in a one-piece moulded 6 mm thick cloth headlining supported by four body tangs, sun visor fixings at the front, and the rear quarter casings at the rear.

The header console incorporates two courtesy lamps and switched map lights. The convertible has a padded serviceable headlining and header console. On some market versions, garage door opener switches are also fitted in the header console.

Rear

Internal and External Trunk Lid Releases

E34527

A welded double loop rear towing eye is installed on the right hand rear corner of the luggage floor.

The trunk lid which is dedicated either to the coupe or the convertible, consists of inner and outer panels clinched together to minimise welding requirements. For some markets, warning triangle stowage is provided in the trunk lid liner. The trunk is opened from the car interior via a switch mounted in the driver side underscuttle. This switch is only operational when the valet mode is inactive, security disarmed (vehicle is unlocked) and the vehicle is stationary.

A key operated lock situated on the RHS of the trunk rear panel, provides emergency external access to the trunk. Non-locking gas struts support the trunk lid when open.

The fuel filler flap which incorporates a magnetic filler cap retainer, is unlocked via an illuminated switch in the driver's underscuttle. The filler flap can only be opened when the engine is not running, security is disarmed and the car is either unlocked or the key is in the ignition switch. A petrol/water drain is provided in the filler recess.

Convertible Top

Convertible Top Latching Mechanism

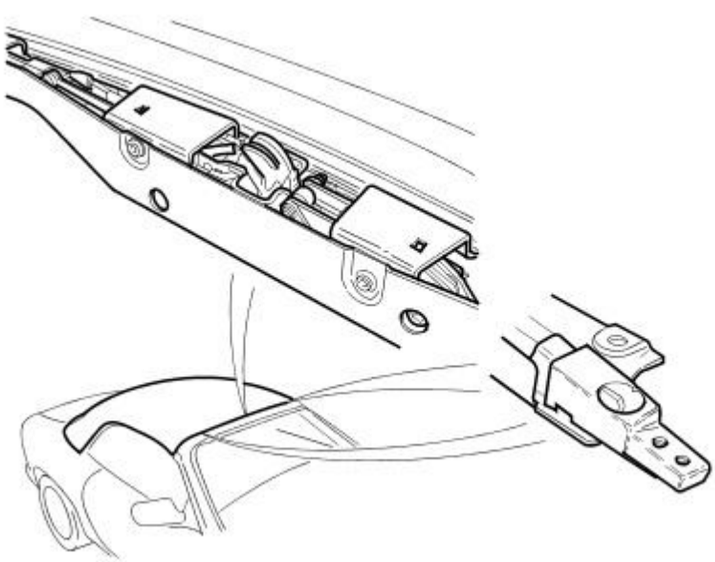

E36086

The fully lined and padded convertible top is fitted to an aluminum frame with steel linkages, providing good structural strength with light weight. The top folds down to a low stack height in the body opening of the rear quarter and has a semi-rigid cover. The top is power latched and has a green tinted, heated, glass backlight incorporating a security antenna. The convertible top operating pump is located on the right-hand side of the trunk.

To operate the top, the switch must be held depressed with the ignition switch in either position I or II. When the top starts to move, an audible warning sounds for 0.7 seconds. Latching and unlatching is automatic. Operation of the convertible top is inhibited at vehicle speeds in excess of 16 km/h (10 mph). If the vehicle exceeds this speed when the top is moving to the lowered position, it will continue to the fully down position. Should the vehicle exceed this speed when the top is being raised, further movement will be inhibited until the speed is reduced. Ensure that all passengers, personnel and equipment are clear of top before raising or lowering it.

Raising and lowering of the convertible top is controlled from the SCP network via the Security and Locking Module (SLM) and the Body Processor Module (BPM).

In the event of latch failure when raising the top, a visual warning is illuminated on the instrument panel. A center pull down feature facilitates manual latching of the top in emergency circumstances. Provision is also made for manual raising of the top should loss of electrics occur.

Doors

Door Seal Assembly

E33415

Doors are common to both coupe and convertible, with a frameless glass system, dual door-mounted seals and demountable hinges with separate multi-stage check arms. The door casings and top rolls are UEV trimmed with cloth center pads. Leather center pads are fitted for some markets. Combined armrests/door pockets are trimmed in leather and have burr walnut veneer insets.

The colour-keyed exterior door handles each have an integrated switch for glass drop on opening. Additionally, the driver's door handle has an integrated key barrel. The cheater is formed by the door mirror base and a black injection moulded inner cheater. The cheater seal is integral with the secondary door seal. Tweeters are fitted in the inner cheater as part of the premium in-car entertainment option. Each door has a combined rearguard/puddle lamp mounted in the door pocket casing.

Both the driver and passenger door incorporate Door Control Modules (DDM and PDM) which are connected to the SCP network and control the raising and lowering of the window glass, locking and security, puddle lamp and door mirror movement and heating functions. A drive-away door locking function incorporated in the DDM and PDM software is activated when the transmission is taken out of Park or Neutral position.

Adjustment of driver and passenger door mirrors including memory functions is controlled by the driver door switchpack through each door module. Door mirror heating is controlled via the rear windshield heating switch on the air conditioning control panel. Electrochromic mirrors available as an option are automatically heated at very low ambient temperatures. A mirror fold back function enabling the door mirrors to fold back against the body/glass when parking the car, is featured for some markets.

Dipping of the passenger door mirror when reverse gear is selected is also featured on some vehicles/markets. Dipping is either 7 degrees in a downward direction, bottom of travel or 5 seconds dependent upon which condition is satisfied first. When the gear selector is moved from reverse the door mirror will return to the original position.

Glass

Door Glass Operating Mechanism

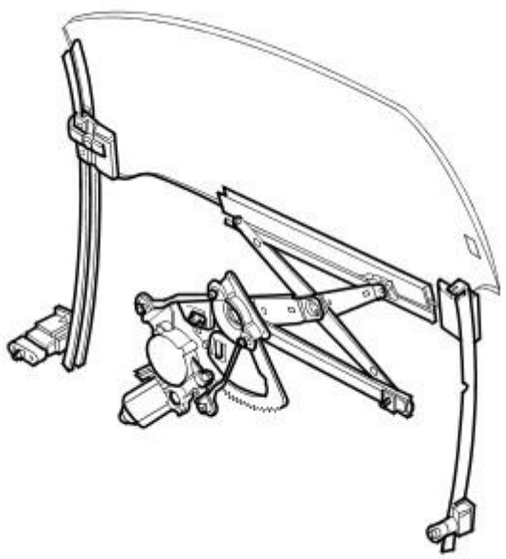

E36084

The windshield, which is common to the coupe and convertible, is in 5 mm laminated glass with a black obscuration band and has a rear-view mirror direct-mounted. The windshield finisher is a one-piece, single color unit with seal. The backlight is 4 mm tempered glass, green tinted and heated. The windshield, backlights and quarter lights, except for the convertible model, are direct glazed to body.

The windshield and coupe backlight are supplied as assemblies complete with trim which is secured to the glass by clips and is fully demountable when the assembly is bonded to the vehicle.

The convertible backlight and outer seal are conventionally glazed to the inner seal, which is stitched and bonded to the top. On both models, the heated backlight remains 'on' for 21 minutes after being switched on unless the driver switches it off before the time delay expires. Some backlights are fitted with a security antenna. A fine wire heated windshield offered as an option on some markets, is controlled from the air conditioning panel.

The door glass on both models is a frameless system with 5 mm green tempered glass. The door glass is operated electrically and raised and lowered by a scissor mechanism.

Each door glass automatically drops 12 mm when the door is opened or when the convertible top is raised or lowered, closing when either the door is shut or the top is fully raised and latched in position. The door glass can be closed via the remote control unit. Operation is internally controlled from switchpacks located in the driver and passenger arm rests via the driver and passenger door modules. The switchpacks are illuminated when the sidelights are on.

One-touch up operation causes the glass to fully close unless an object is detected or if the glass is already within 45 mm of top of travel when the door is opened. On detection of an object, the glass will drop fully open or to 200 mm below the obstruction. All drop-glass operates with the ignition switch in either position I or II and for 30 seconds after ignition is switched off or the associated door is opened.

Rear Quarter Glass Operating Mechanism

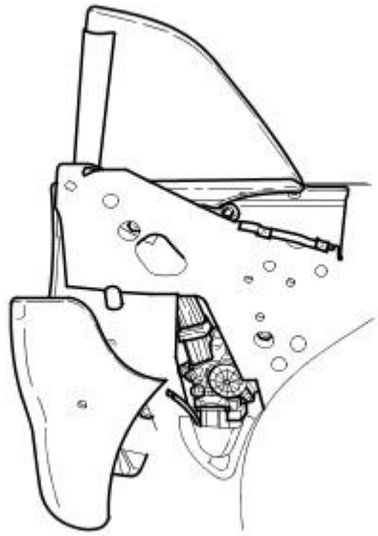

E36106

The coupe rear quarter glass is a fixed 4 mm, tempered, green-tinted unit direct glazed to the tonneau. The rear quarters of the convertible are 5 mm, tempered, semi-flush, green tinted units with a drum and wire lowering and raising system which provides full glass drop when the top is lowered.

Control is incorporated in the convertible top switch. With the convertible top up, the rear quarter glass is raised by pressing and releasing the front of the switch and lowered by pressing and releasing the rear of the switch (one touch down).

The rear quarter glass is automatically powered to the bottom position when the top is lowered and further operation is inhibited until the top is raised and latched.

When lowering the rear quarter glass at vehicle speeds up to 16 km/h (10 mph), failure to release the switch on operation of the audible alarm will result in lowering of the top.

The rear quarter glass is operated automatically up or down respectively when raising or lowering the convertible top. When the top is raised, with the door glass at the top of its travel, the glass will be powered down 12 mm and the rear quarters will be powered to the bottom of their travel. When the top is fully raised all glass will be powered up to close to form a seal with the top.

If the front glass has been either fully or partially lowered manually, the rear quarters only will be powered up. If the power supply to the driver or passenger module is disconnected (battery disconnected, module unplugged or fuse removed), then the system must re-learn the characteristics. The last known glass position is regarded as top of travel by one touch operation until re-learning has taken place. One touch down, manual up and down control and the automatic lowering of the glass for door opening are unaffected.

To re-learn the positioning characteristics, the associated door must be closed (door ajar switch inactive). The glass must then be driven fully down and held stalled at the bottom of its travel for a minimum of one second. The glass is finally driven to the fully up position and held stalled for a minimum of one second. The re-learning procedure must also be accomplished to regain the automatic closing sequence.

Wipers / Washers

Windshield Washer Jet Assembly

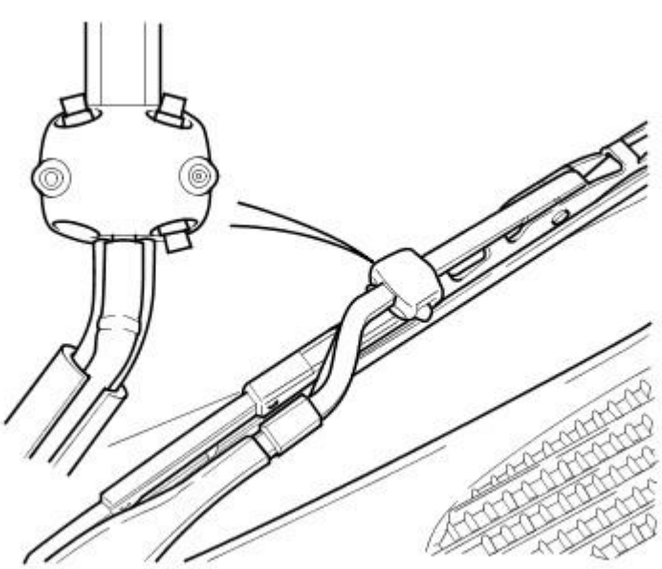

E36124

The windshield wiper motor, with integral microswitch for overload protection, is mounted in the plenum below the windshield and is handed for market requirements. The vehicle has a conventional twin wiper arm system with synthetic rubber blades and wiper arm mounted windshield wash jets. Jets are designed to resist freezing, eliminating the need for heated nozzles. Wiper modes are 2-speed, flick wipe and six settings of intermittent wipe.

Screen wash tubing is supplied assembled in the wiper arm and is fitted to a connector which is part of the plenum cover assembly. The wipers park on the windshield. The washer fluid reservoir is located in the cavity formed by the front bumper, LH front valance and the front wing liner. The reservoir has a fluid capacity of 7 liters of liquid and is fitted with a low level sensor. When screenwash is selected, the wipers complete three cycles followed by a 4 second delay and a further cycle to clear residual fluid from the screen until either the switch is released or the ignition is moved from position II.

Headlamp Power Wash Jet Assembly (Retracted and extended)

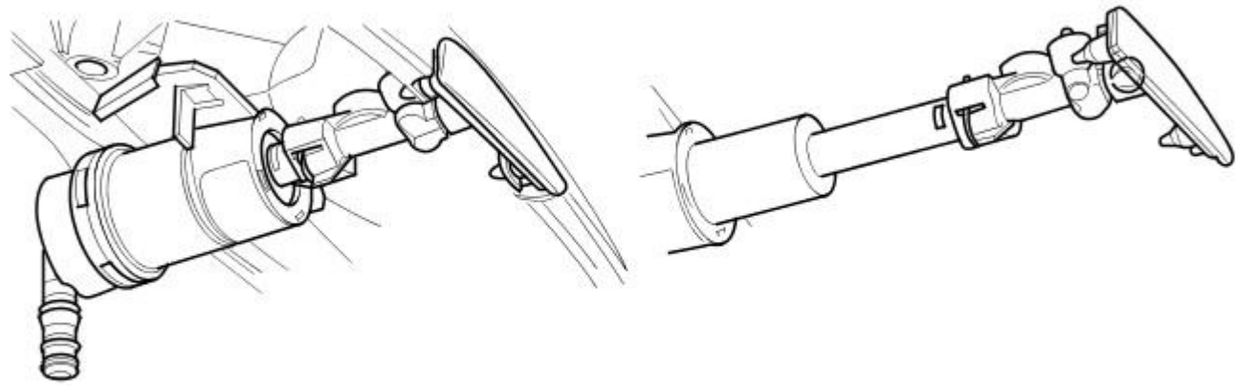

E36125

Some markets and options have a headlamp telescopic power wash mounted below each lamp glass. These washers will operate in conjunction with the screen-washers, when the headlights are on dip or main beam, or daylight running is enabled, the washer fluid does not indicate low level, and the ignition switch is in position II.

When wash/wipe is selected and held, the headlamp wash pump is activated and sprays for 800 ms, waits 6 seconds and then sprays again. This spray is repeated after each six second interval until the switch is released or 20 seconds has elapsed. When the switch is released, further power wash cycles will be inhibited for the next 5 wash/wipe operations to conserve wash fluid.

All power wash fittings are snap fit, cover to jet, jet to headlamp, jet to hose. The wash/wipe system is operated from switches on the steering column via the Body Processor Module (BPM), part of the SCP network.

Seats

Front Seat (Underside and upper frame)

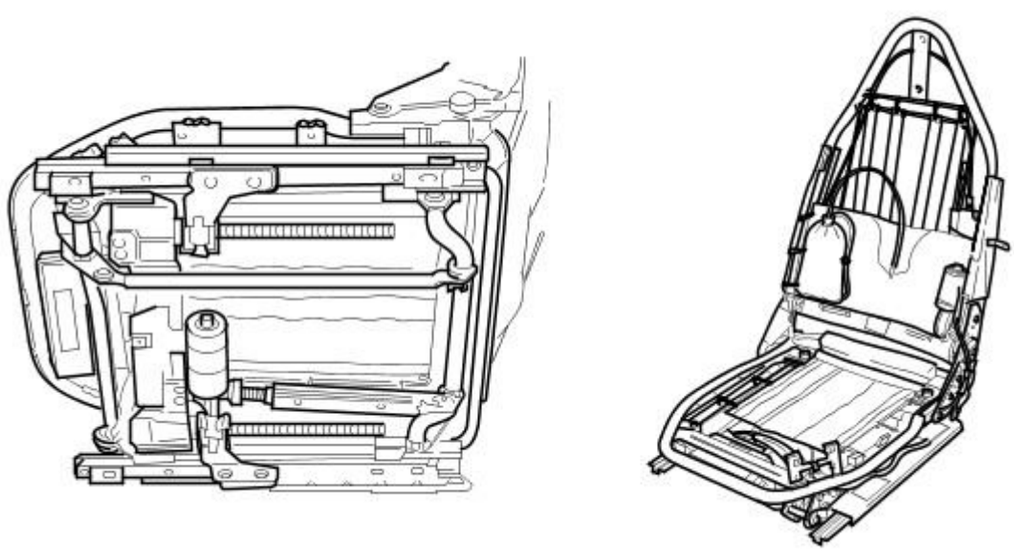

E36085

The driver and passenger seat control modules (DSM and PSM) which control seat and squab movement, and seat heating where fitted, are mounted on brackets below the seat frames and are connected to the SCP network.

Seat movement control switch assemblies fitted in the outboard side of both the driver and front passenger seats, are color keyed to the seats. These switches, through the seat control modules, operate motors for fore and aft, recline and raise and lower movements of the seat. On some markets/options, another motor operates the lumbar adjustment pump which is also controlled by a switch mounted in the seat. Only one of the slide, recline or height motor outputs can be driven at any one time under manual control. Additionally, some markets/options have passenger seat height adjustment, seat and squab heaters and driver's seat position memory.

On cars fitted with driver seat memory, each motor is fitted with feedback potentiometers. The illuminated on/off switches for seat heating where fitted as options or standard fit in cold climate territories, are mounted in the center console. Rear passenger access/egress is made easier by a lever mounted on the upper outside of driver and passenger seats allowing the seat squabs to fold forward. Each front seat has a rear map pocket.

The rear seats are wire-framed units trimmed to match the front seats and specifically tailored to fit either the coupe or the convertible. No adjustment of the rear seats is provided. Provision is made for the fitting of child seats where legally required.

Body Structure

Zinc Coated BIW Components

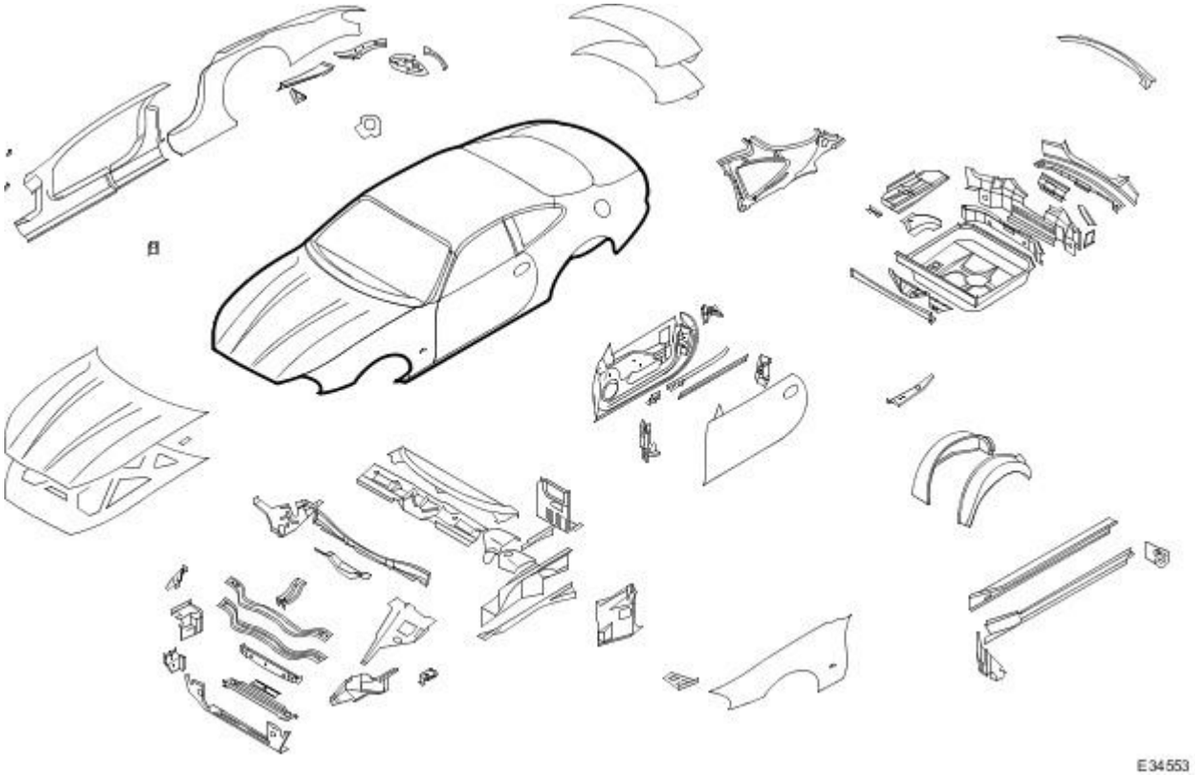

Produced in coupe and convertible styles complete with doors, hood and trunk lid, the body comprises almost 200 components. For service requirements, each body shell is available less doors, front fenders, hood and trunk lid. The convertible body is a cut-down version of the coupe, incorporating tubular internal sill reinforcements and associated structures.

To fully satisfy requirements for a minimum of six years corrosion resistance, more than 70% by weight of steel panels are zinc coated on both sides (ref. illustration above) and all panel joints below the roof line have zinc protection between them prior to welding together. Close tolerance apertures together with water tight joints and seals ensure low interior noise levels and general travel refinement. For additional torsional strength and anti-flutter properties at key points, metal to metal adhesives or interweld seals are applied to mating surfaces before welding.

Whilst during manufacture, bodyshell aperture gaps are set to dedicated panels, these components are available as service items.

Front End Body Panels -

Torques

Component	Nm
Nut and bolt front cruciform brace - normally aspirated	20 - 26
Bolt front cruciform brace - supercharged	41 - 54

Published: 11-May-2011

Front End Body Panels - Front End Body Panels

Description and Operation

Front Bumper Assembly and Undertray

• NOTE: Vehicles built up to 01/2004.

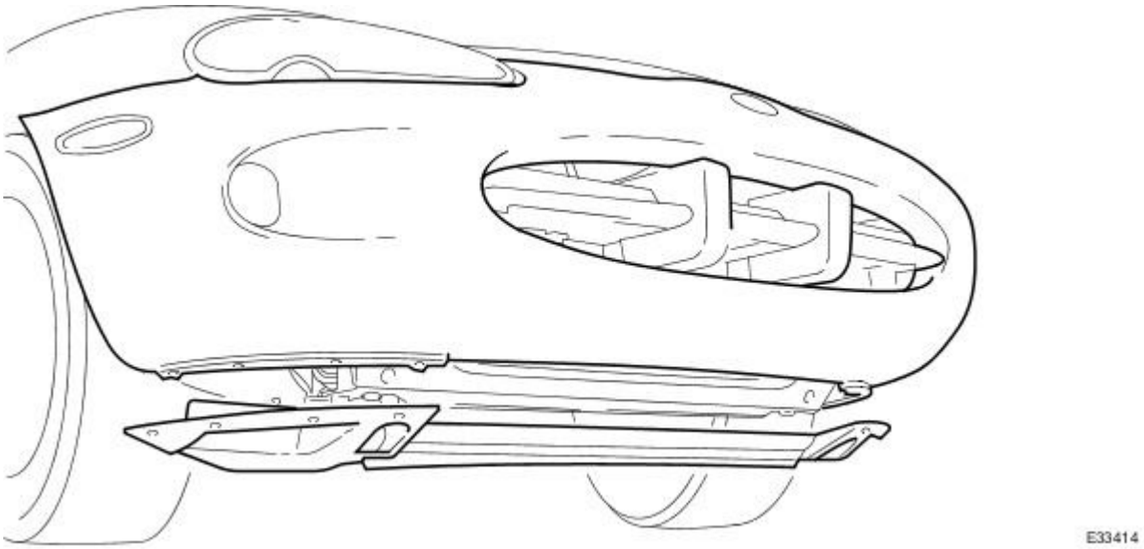

Front Bumper Assembly and Undertray

• NOTE: Vehicles built 02/2004 onwards.

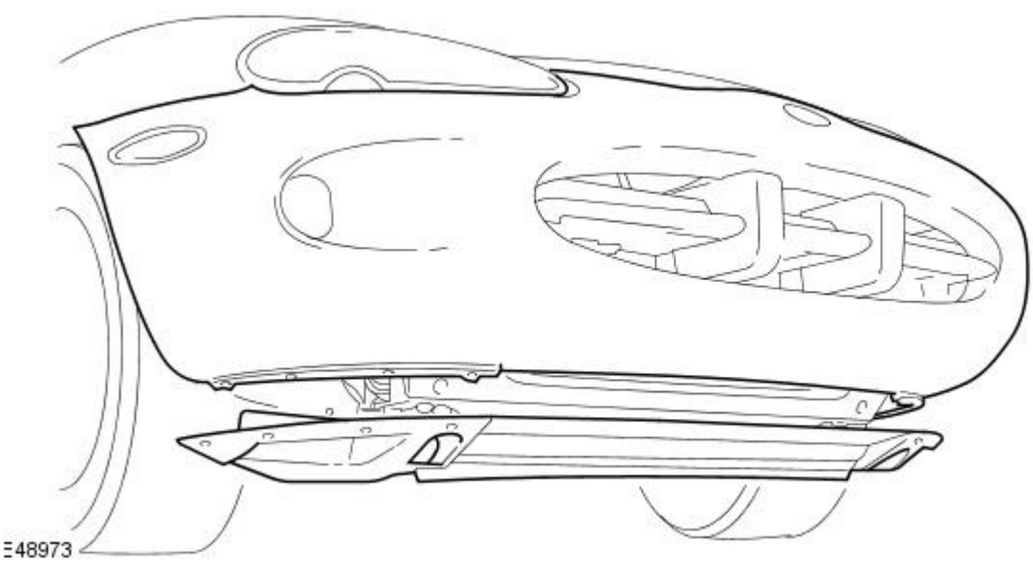

The front body structure is designed to satisfy bumper impact requirements and primarily comprises the front bumper assembly which is fully described in
For additional information, refer to: Bumpers (501-19 Bumpers, Description and Operation).

The front fenders which are common to coupe and convertible models, are each bolted to the front valance, front bumper casing and 'A' post. Removal and installation of the fenders is detailed in the Body and Paint Repair manual.

Description and removal and installation instructions for the hood are included in Section 501-03.

A GMT undertray fitted to assist air flow through the cooling pack, is secured to the bottom of the bumper casing and the body front cross-member. A small GMT air deflector fitted to the undertray at each wheelarch improves air flow in the front wheel area.

Plenum Cover and Front Seals

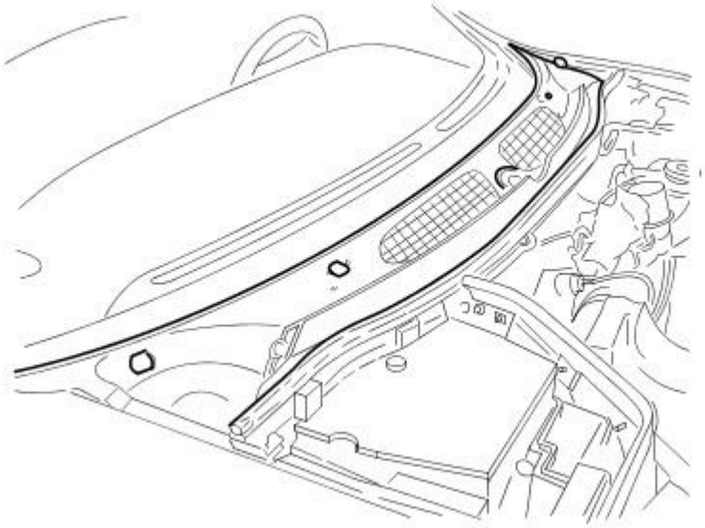

Protective GMT liners fitted in the wheelarches each incorporate a readily detachable panel for access to the headlamp assembly. An injection moulded plenum cover, painted Dorchester grey on all vehicles and secured to the bodywork by screws and plastic fasteners, incorporates windshield and fender seals, and screenwash connectors.

Front End Body Panels - Bulb Access Panel

Removal and Installation

Removal

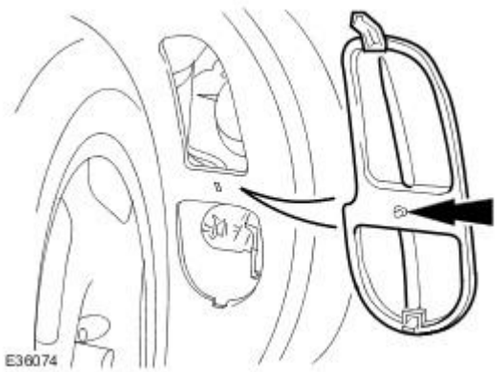

1. Position road wheel for access.

- With vehicle handbrake on, start engine.
- Turn steering wheel until road wheel permits access to liner cover.
- Stop engine.

2. Remove front wheel arch liner access cover.

- Rotate liner access cover fastener 1/4 turn and remove cover from vehicle. Ensure that cover fastener is retained.

Installation

1. Fit front wheel arch liner access cover.

- Position and seat access cover on wheel arch liner.
- Fit fastener to cover and rotate 1/4 turn to secure.

2. Reposition road wheels.

- Start engine and reposition road wheels to straight ahead position.
- Stop engine.

Front End Body Panels - Cowl Panel Grille

Removal and Installation

Removal

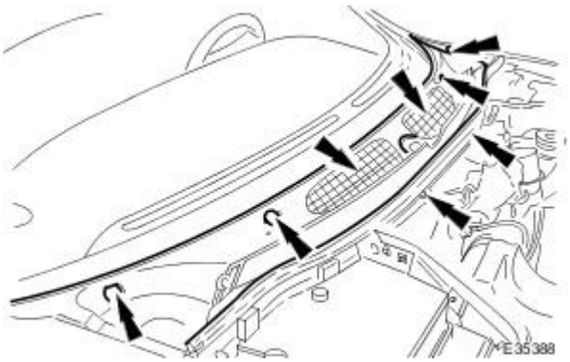

1. Remove wiper arms and blades. Refer to Section 501-16.
2. Remove cover retaining screws and fasteners.
   - Remove plastic covers from the rear screw locations.
   - Slacken and remove the eight plenum cover retaining screws and two plastic central fasteners.

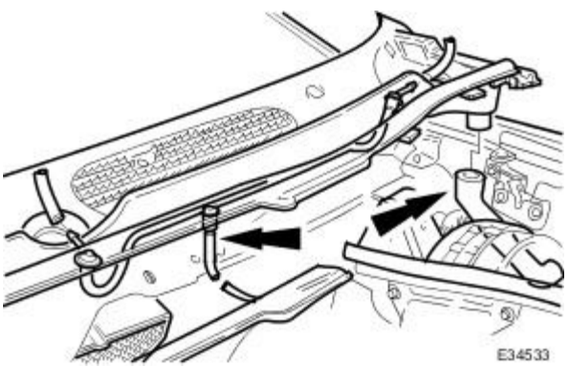

3. Disconnect and remove plenum cover.
   - Position plenum cover for access to drain hoses and screenwasher tubes.
   - Disconnect drain hoses and screenwasher tubes from plenum cover and remove plenum cover from vehicle.

Installation

1. Position plenum cover for access and connect drain hoses and screenwasher tubes.
2. Reposition and seat plenum cover.
3. Fit but do not tighten the retaining screws and plastic fasteners.
4. Commencing in the center, tighten the retaining screws and plastic fasteners.
5. Fit plastic covers over rear screw locations.
6. Fit wiper arms and blades. Refer to Section 501-16.

Front End Body Panels - Cowl Vent Screen

Removal and Installation

Removal

1. Open hood and fit fender covers.
2. Remove wiper arm and blade assemblies. Refer to 84.15.44.90.
3. Remove plenum chamber cover. Refer to 76.10.01.
4. NOTE: Driver side water deflector is captive to throttle cable.

   Slacken and remove bolts securing plenum chamber water deflectors to BIW and remove passenger side deflector from vehicle.

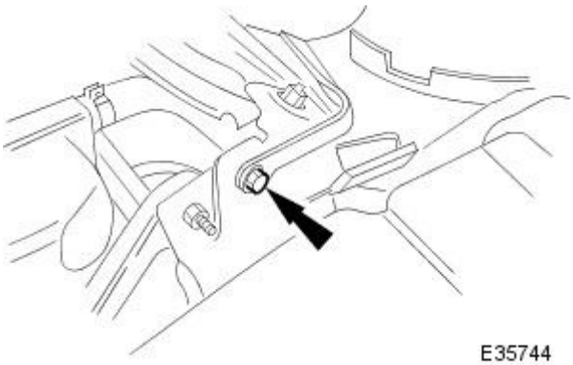

5. Rotate throttle quadrant to fully open position and disconnect throttle inner cable nipple from quadrant.

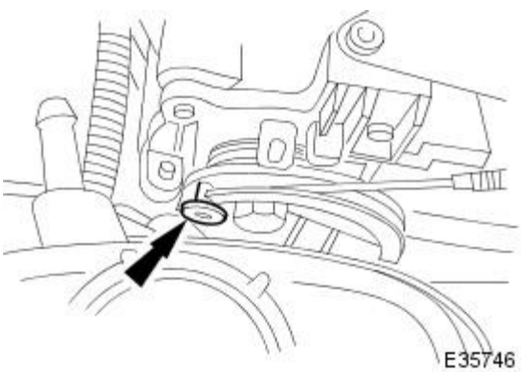

6. Cut through and discard tie strap securing throttle cable and adjuster to abutment bracket and lift cable and adjuster clear of bracket.

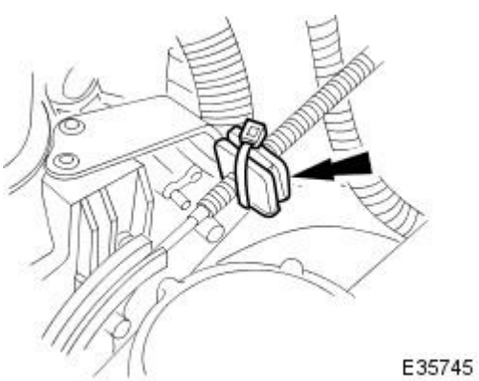

7. Pass throttle cable through plenum closing panel grommet.

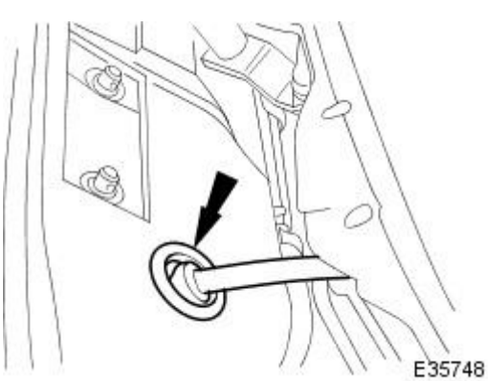

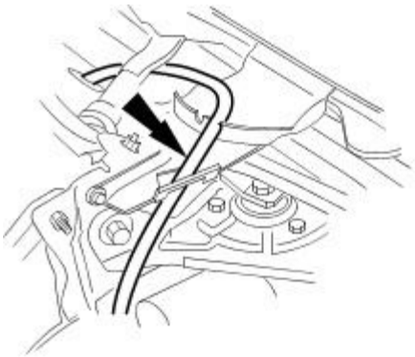

E35808

8. Pass throttle cable through driver side water deflector and remove deflector.

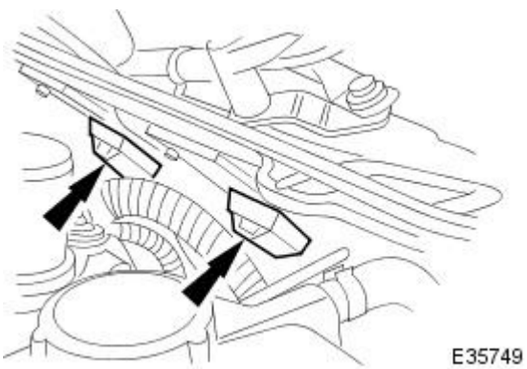

E35749

9. NOTE: This step is not applicable to N/A vehicles from 1999 Model Year onwards.

Disconnect both ignition amplifier harness multiplugs.

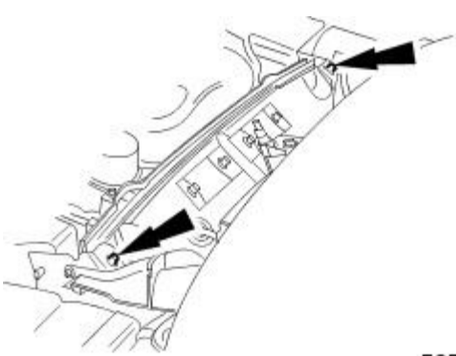

E35809

10. Slacken and remove plenum chamber closing panel to BIW securing nuts and remove panel from vehicle.

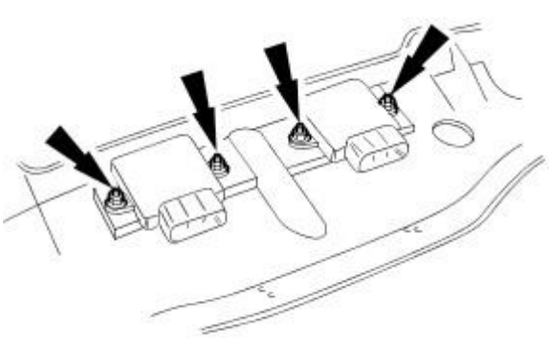

E35750

11. Remove nuts securing ignition amplifiers to closing panel and remove amplifiers from panel.

Installation

1. Position ignition amplifiers on closing plate and fit and tighten securing nuts.

2. Fit closing plate to BIW ensuring that lower clips locate correctly on body flange.

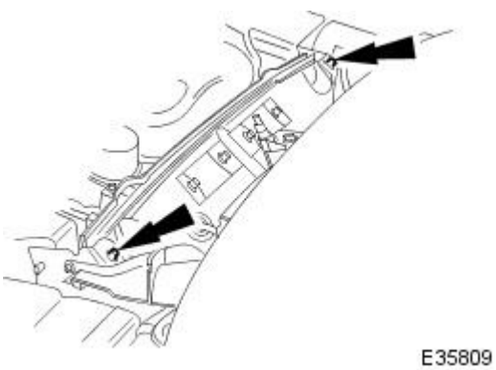

3. Fit and tighten closing plate to BIW securing nuts.

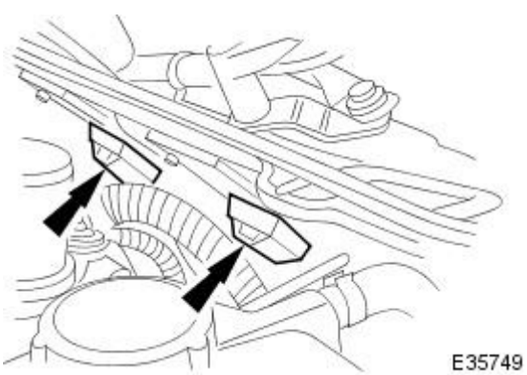

4. NOTE: This step is not applicable to N/A vehicles from 1999 Model Year onwards.

Connect both ignition amplifier harness multiplugs.

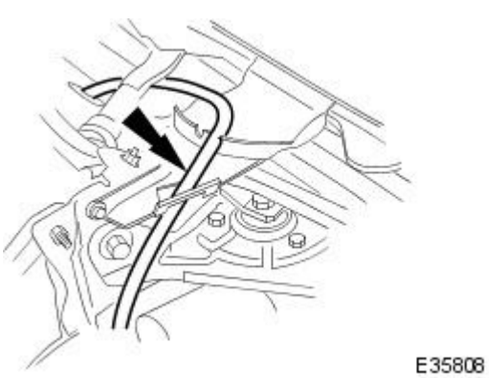

5. Pass throttle cable through driver side water deflector.

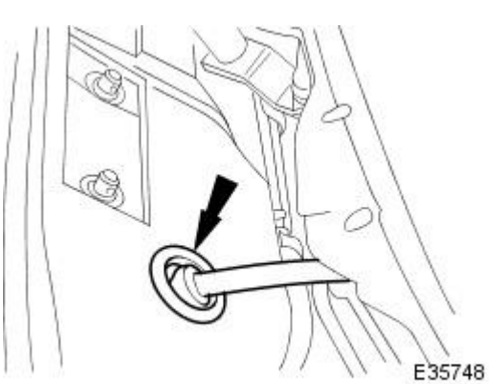

6. Pass throttle cable through closing plate grommet.

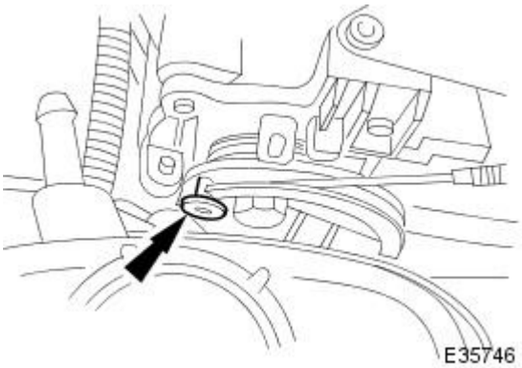

7. Position throttle quadrant to fully open position and fit throttle cable inner to quadrant ensuring that nipple fully seats in slot.

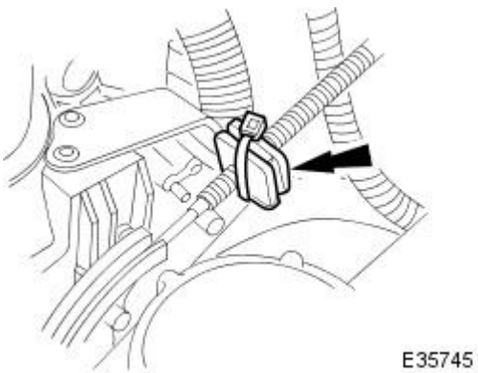

8. Release throttle quadrant and fit and fully seat throttle cable adjuster in abutment bracket.

9. Check and as necessary adjust throttle cable. Refer to 19.20.08.

10. Using new tie strap, secure throttle cable adjuster in abutment bracket.

11. Position plenum water deflectors and fit and tighten securing bolts.

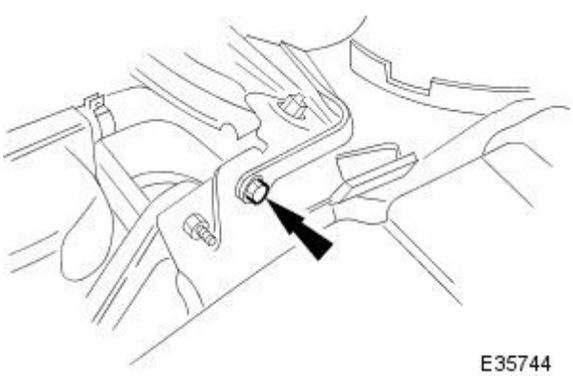

12. Fit plenum chamber cover. Refer to 76.10.01.

13. Fit wiper arm and blade assemblies. Refer to 84.15.44.90.

14. Remove fender covers and close hood.

Front End Body Panels - Fender Splash Shield

Removal and Installation

Removal

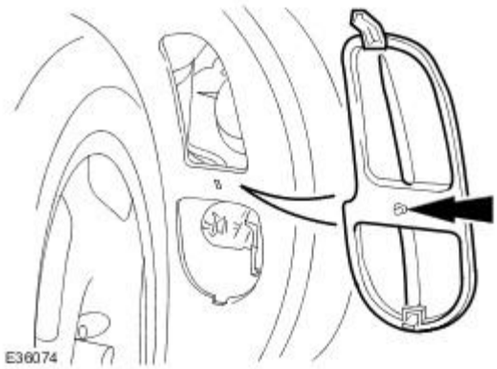

1. Remove front wheel and tire assembly. Refer to Section 204-04.
2. Remove wheel arch liner access cover.
   - Rotate access cover fastener 1/4 turn and remove cover from vehicle.

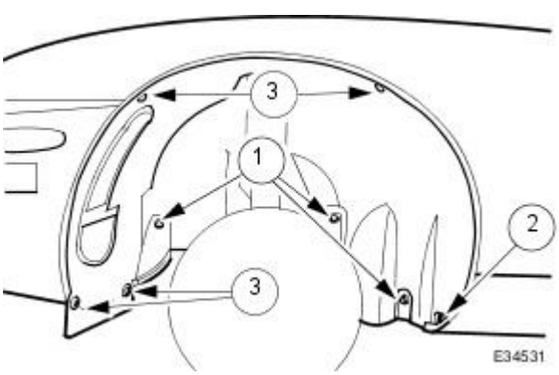

3. Remove wheel arch liner.
   1. Slacken and remove three plastic nuts longitudinally securing wheel arch liner to body.
   2. Slacken and remove screw securing liner to front of sill.
   3. Remove expander pegs or screws from four liner retainers, remove and discard retainers and remove liner and spoiler from vehicle.

Installation

1. Fit front wheel arch liner.
   - Position and seat wheel arch liner and spoiler.
   - Fit the four new wheel arch liner retainers.
   - Drive expander pegs into the liner retainers.
   - Fit and tighten screw securing liner to front of sill.
   - Fit and tighten plastic liner securing nuts.
   - Position and secure liner access cover, rotating fastener 1/4 turn.
2. Fit wheel and tire assembly. Refer to Section 204-04.

Front End Body Panels - Radiator Grille Opening Cross BraceConvertible

Removal and Installation

Removal

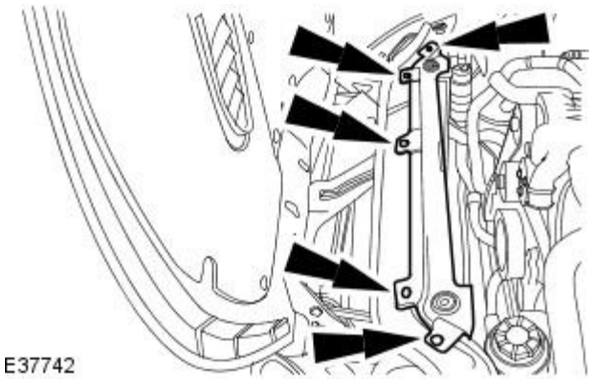

1. Remove the radiator support bracket.

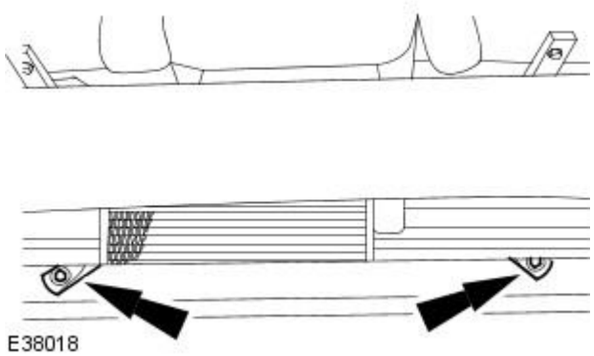

2. Remove radiator grille opening cross brace lower retaining bolts.

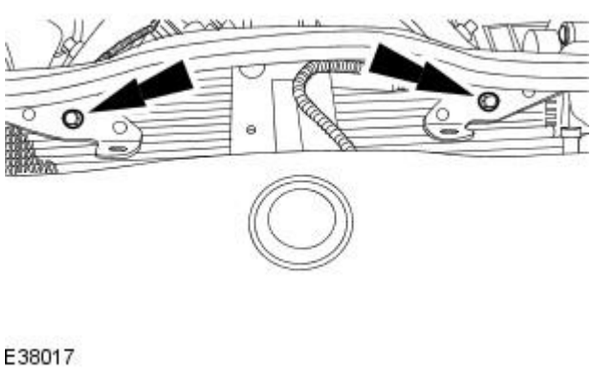

3. Remove the radiator grille opening cross brace.

- Remove the radiator grille opening cross brace upper retaining bolts

Installation

1. To install, reverse the removal procedure.

Published: 11-May-2011

Front End Body Panels - Radiator Grille Opening Panel

Removal and Installation

Removal

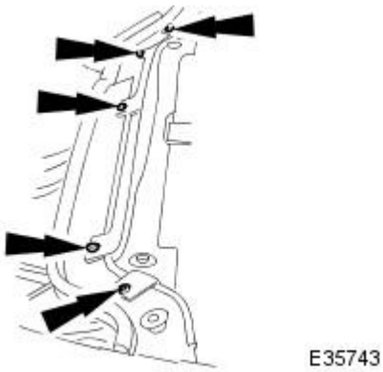

1. Open hood and fit fender covers.
2. Slacken and remove the closing panel securing bolts.
3. Remove closing panel from vehicle.

Installation

1. Position closing panel over radiator.
2. Fit and tighten closing panel securing bolts.
3. Remove fender covers and close hood.

Front End Body Panels - Radiator Splash Shield

Removal and Installation

Removal

All vehicles

1. Raise and support the vehicle.
   For additional information, refer to: Using the Workshop Jack (100-02 Jacking and Lifting, General Procedures).

Vehicles built up to 01/2004

2. Remove the radiator splash shield retaining screws.

E34483

3. Remove the radiator splash shield.

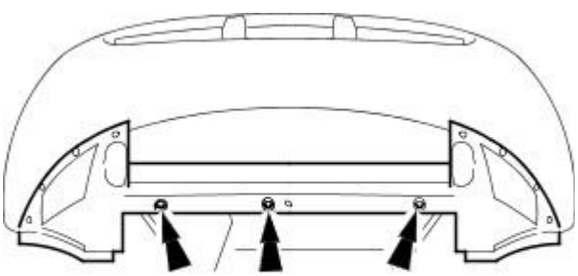

E33498

Vehicles built 02/2004 onwards

4. Remove the radiator splash shield.

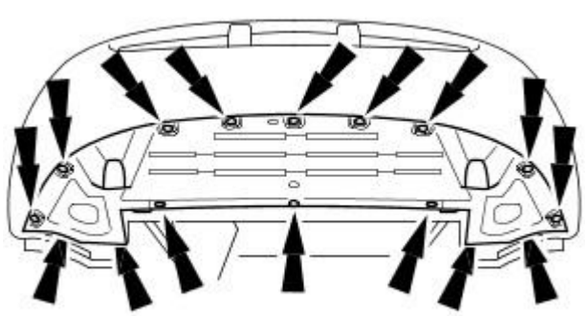

E48869

Installation

1. To install, reverse the removal procedure.

Body Closures - Body Closures

Description and Operation

Doors

Door Seal

E33415

The doors, which are common to coupe and convertible models and have a frameless glass system, each comprise inner and outer panels, clinched and bonded together to form a door assembly. Both panels incorporate extensions spot welded together to form a cheater assembly and a PVC sealant is applied in cosmetic bead form to all clinch joints. Both the door assembly and separate outer panel are available as service items.

A dual, joint-less EPDM sponge seal is installed on each door together with a water shedder and separate vacuum formed speaker cup.Upper and lower door hinges and multi-stage check arms require no lubrication throughout vehicle life

Hood

Front Seal Locations

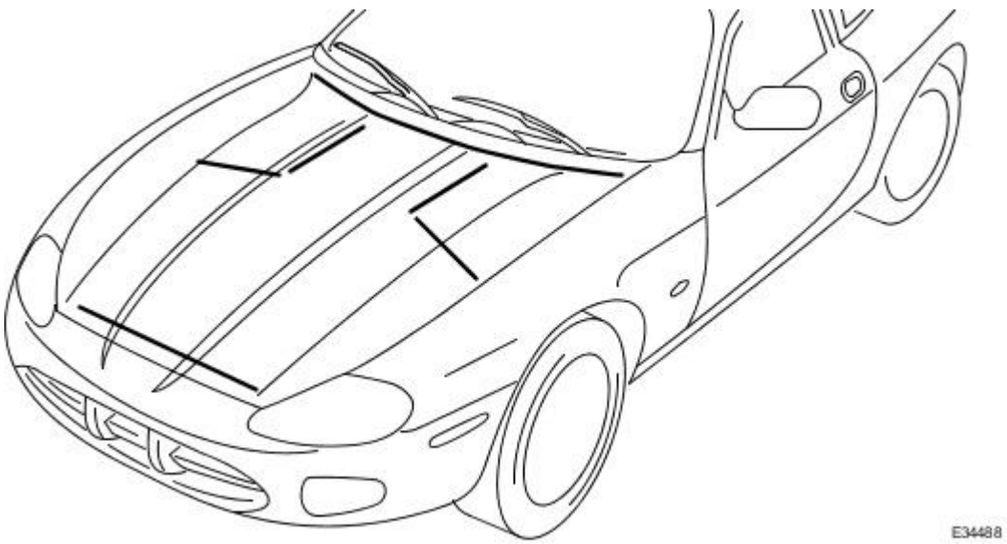

Common to coupe and convertible models, the hood assembly consists of one piece inner and outer panels, clinched and bonded together, with cosmetic bead PVC sealant applied to all clinch joints.

Hinge assemblies, hinge reinforcements, gas strut brackets and a hood lock striker are attached to the inner panel which also accommodates a hood liner. The hinge assemblies are of double link design to permit minimum clearance between the hood leading edge and the top of the bumper casing.

The hood seats on EPDM sponge bulb seals on the BIW front cross member and four flanges on the secondary bulkhead, and on a transverse seal bonded to the plenum cover.

Trunk Lid

Trunk Lid Gas Support Strut

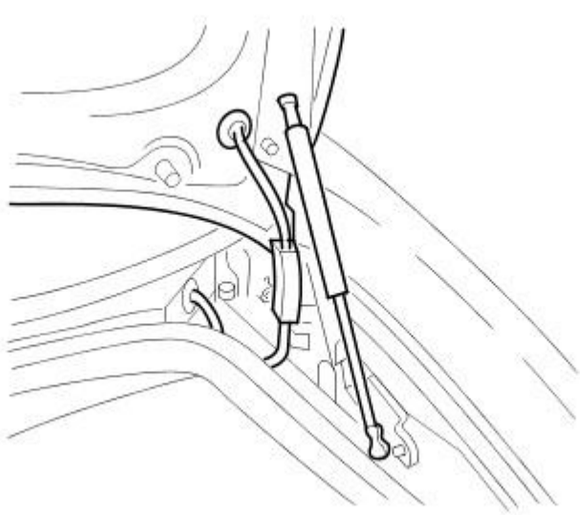

Dedicated either to the coupe or convertible, the trunk lid comprises one piece inner and outer panels clinched and bonded together, with cosmetic bead PVC sealant applied to all clinch joints.Hinge reinforcements and a lock striker mounting reinforcement are attached to the lid inner panel and combined hinge and gas strut mounting assemblies are secured by bolts to the inner panel and the tonneau/trunk flange at each side.
The trunk lid seats on a single joint, EPDM sponge, single profile bulb seal, mounted on the trunk flange.

Body Closures - Luggage Compartment Lid Alignment

General Procedures

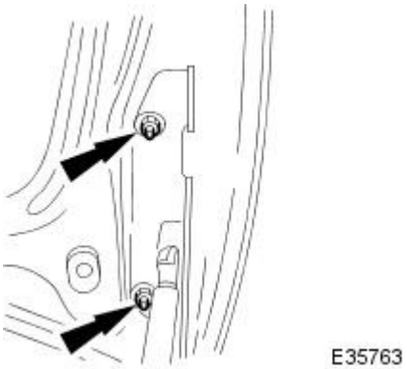

1. Supporting trunk lid in the open position, disconnect support struts from lid.
2. Slacken but do not remove bolts securing hinges to trunk lid.

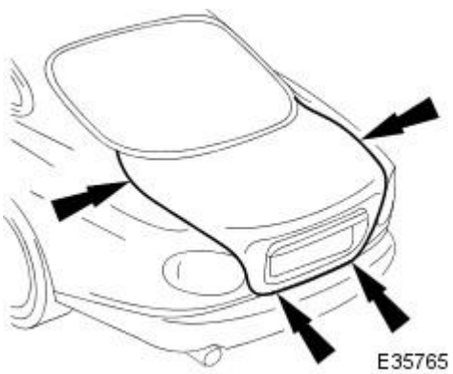

3. Carefully close trunk lid and check alignment with BIW.
4. Open trunk lid, adjust position on hinges as necessary and tighten one securing bolt on each side.
5. Close trunk lid and re-check alignment.
6. Open trunk lid and tighten remaining hinge bolts.
7. Fit support struts to trunk lid pivots ensuring that retaining clips are fully seated.
8. Check that trunk lid closes satisfactorily.

Body Closures - Door Opening Lower Weatherstrip2-Door

Removal and Installation

Removal

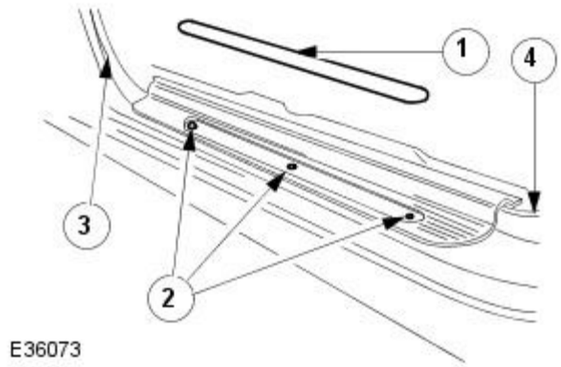

1. Remove the draught welt.

• NOTE: The finisher can be easily damaged, care must therefore be exercised during removal.

1. Remove the treadplate finisher and place face uppermost on sheet of clean dry polythene.
2. Slacken and remove treadplate securing screws and remove treadplate.
3. Remove front of welt from aperture flange.

• NOTE: The rear welt section is integral with the seal and must not be separated from it.

4. Withdraw rear draught welt section from aperture flange.

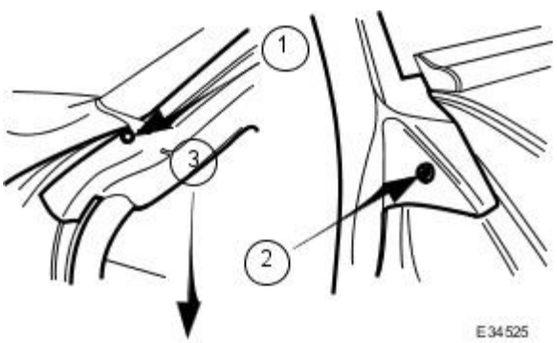

2. Remove the door aperture seal.

1. Remove the three fasteners securing seal to 'A' post and cut through Alphaseal.
2. Remove fastener securing seal to 'B' post.
3. Remove seal complete with rear draught welt section from door aperture.

Installation

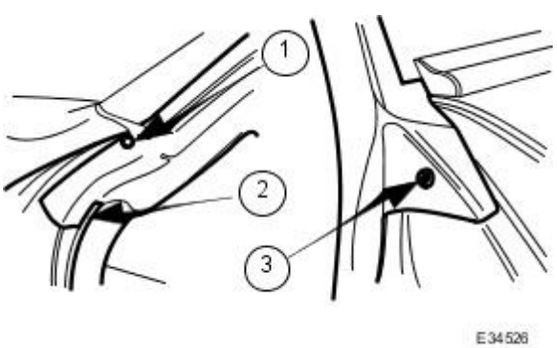

1. Fit door aperture seal.

1. Position seal on 'A' post and fitting lower one first, secure with three fasteners.
2. Fit and firmly seat seal in aperture channel.
3. Secure to 'B' post with fastener.

- Apply Alphaseal .

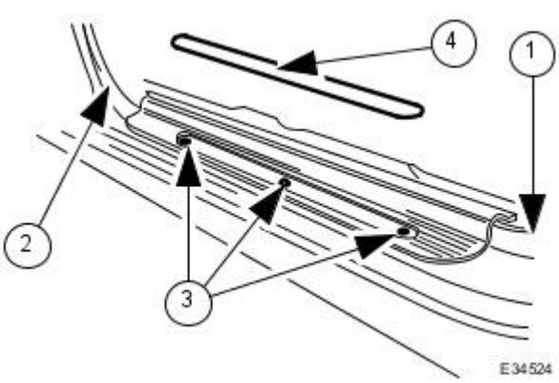

2. Fit draught welt section.

1. Fit and fully seat rear draught welt section over aperture flange.
2. Fit and fully seat front welt section over aperture flange aligning end with panel joint.
3. Position sill tread plate and fit and tighten three securing screws.
4. Fit treadplate finisher. If finisher has been renewed, remove protective film.

Body Closures - Door Opening Upper Weatherstrip

Removal and Installation

Removal

1. Remove exterior door mirror. Refer to Section 501-09.
2. Remove door casing. Refer to Section 501-05.
3. Remove door waist rail finisher.
4. Remove door inner waist seal.
5. Release door edge seal fixings.

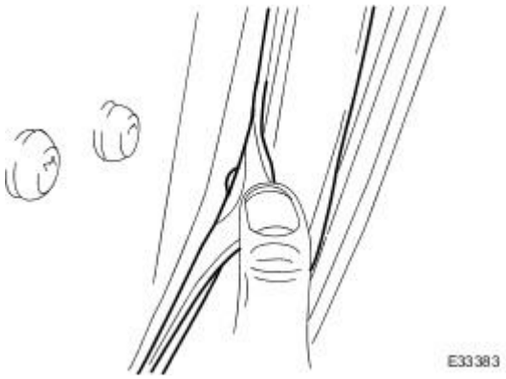

6. Using clip removal tool, remove seal fixings from door inner face and lock face.

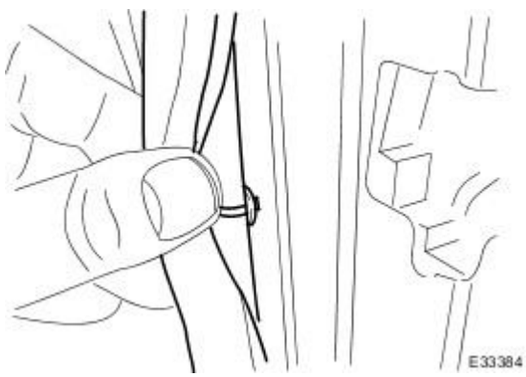

7. Ensuring that door paintwork is not damaged, cut through sealant between cheater seal and cheater frame.
8. Release seal upper fixings from door hinge face.

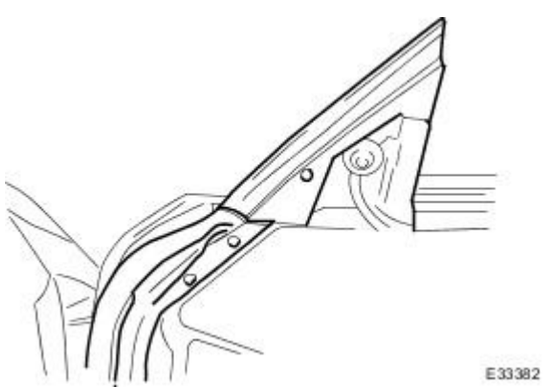

9. Carefully pull seal upwards to clear cheater frame and remove seal from door.

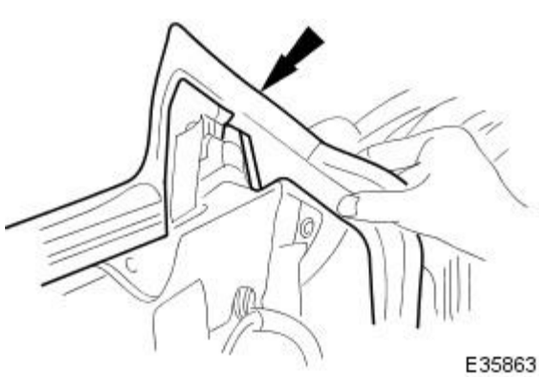

10. Clean any residual sealant and butyl strip from cheater frame.
11. If original seal is to be re-fitted, carefully remove residual butyl strip from seal interior.

Installation

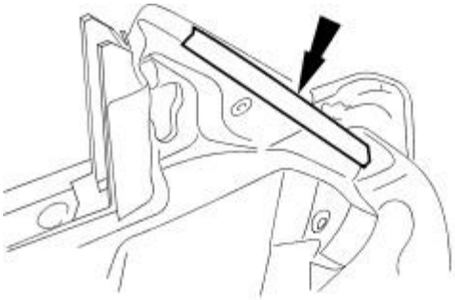

E35869

1. Apply butyl strip to inner leading edge of cheater frame.

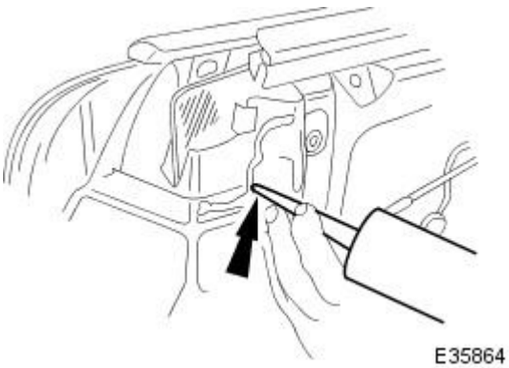

E35864

2. Apply Alphaseal bead to seal contact area of door rear face.

3. Position and fully seat seal on door cheater frame.
4. Fit and fully seat seal fixings to upper door lock face.
5. Fit seal inner face fixings to door.
6. Fit seal edge fixings to door.
7. Apply Alphaseal to leading edge of cheater seal.

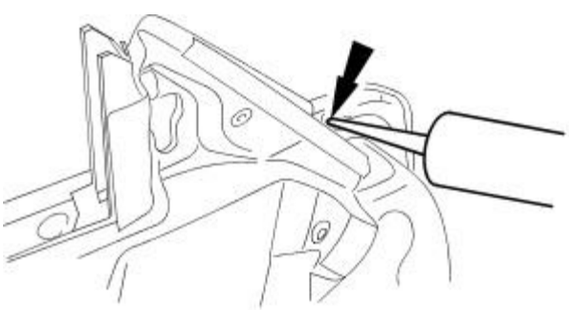

E35868

8. Fit door waist rail finisher, aligning rear end with edge of door and maintaining a 4mm gap at other end.
9. Fit door inner waist rail seal ensuring that it is fully forward and contacting the front guide leg.
10. Fit door casing. Refer to Section 501-05.
11. Fit exterior door mirror. Refer to Section 501-09.

Body Closures - Fuel Filler Door

Removal and Installation

Removal

1. Remove battery cover.
2. Remove trunk floor carpet.
3. Remove trunk front liner. Refer to 76.19.31.
4. Remove trunk rear finisher. Refer to 76.19.44.
5. Remove cover from LH rear lamp assembly.
6. If fitted pass fuel filler flap emergency release cord through slot and remove LH liner from trunk. Refer to 76.10.25.
7. Supporting fuel filler flap, slacken and remove securing nuts and remove filler flap from vehicle.

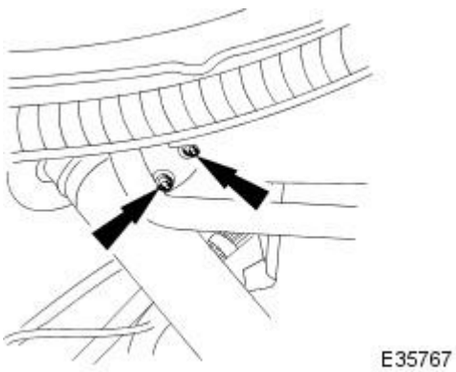

Installation

1. Position fuel filler flap on vehicle and fit and tighten securing nuts.
2. Position LH side liner in trunk and if fitted pass emergency release cord through slot. Refer to 76.10.25.
3. Fully seat LH liner.
4. Fit and fully seat cover on LH rear lamp.
5. Fit trunk rear finisher. Refer to 76.19.44.
6. Fit trunk front liner. Refer to 76.19.31.
7. Fit trunk floor carpet.
8. Fit battery cover.

Body Closures - Hood

Removal and Installation

Removal

1. Open hood and fit fender covers.
2. Apply protective masking tape to leading edge of hood.
3. Slacken but do not remove hood securing bolts.

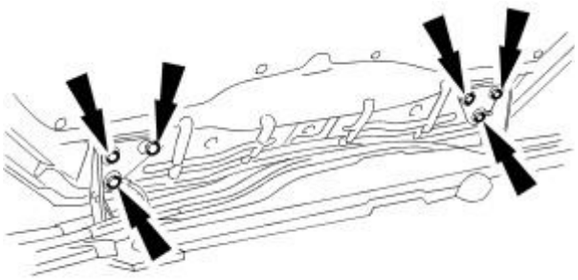

E35751

4. With assistance, supporting hood, release support strut upper retaining clips and remove struts from hood pivots.

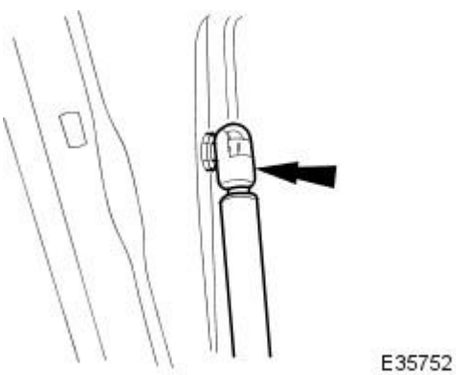

E35752

5. Fully supporting hood to prevent paintwork damage, remove securing bolts and remove hood from vehicle.
6. Slacken and remove expander screws from hood insulation pad retainers.

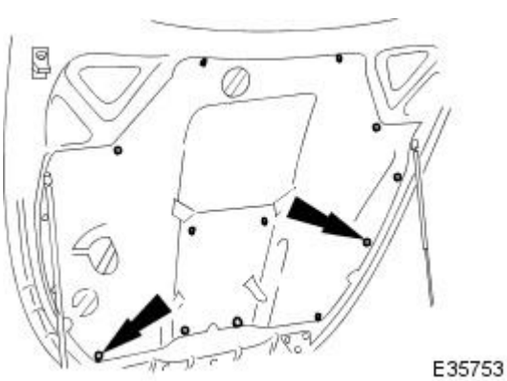

E35753

7. Commencing at bottom, remove retainers from insulation pad.

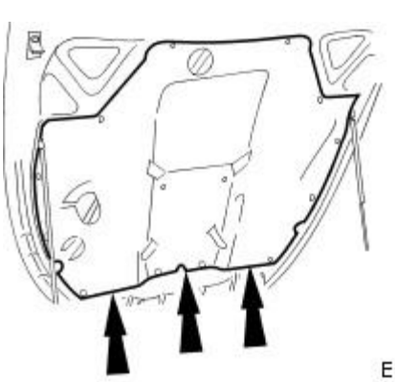

E35756

8. Remove insulation pad from hood.

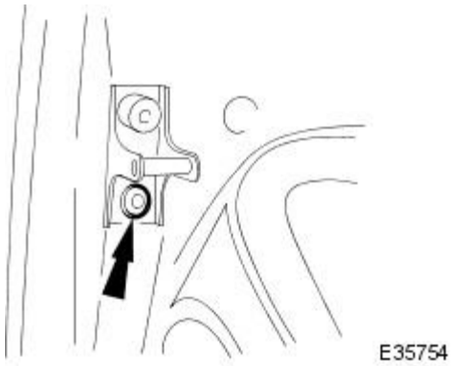

9. Slacken and remove bolts securing striker/buffer assemblies to hood and remove assemblies.

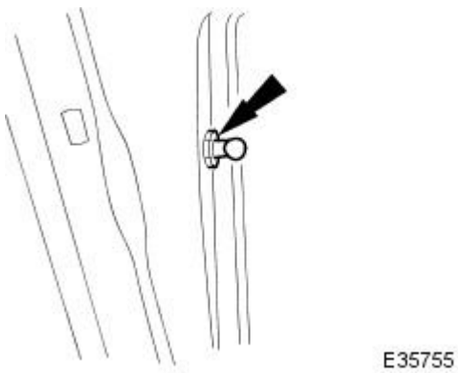

10. Slacken and remove hood support pivots.

Installation

1. Fit and fully tighten support pivots to hood.
2. Position both hood striker/buffer assemblies and fit but do not tighten securing bolts.
3. Position insulation pad on hood and commencing at top, fit and fully seat new plastic retainers.
4. Fully tighten retainer expander screws.
5. With assistance, carefully lift hood into position on vehicle and fit but do not tighten securing bolts.
6. Fit and fully seat upper end of each support strut on hood pivot
7. Exercising care to avoid damaging paintwork, close hood and check alignment.
8. Open hood, adjust alignment on hinges as necessary and fully tighten securing bolts.
9. Close hood and check positioning of striker/buffer assemblies.
10. Open hood and adjust striker/buffer assembly positions as necessary
11. Close hood and re-check striker/buffer alignment.
12. Open hood, fully tighten striker/buffer securing bolts and fully tighten hood securing bolts.
13. Remove masking tape and fender covers and close hood.

Body Closures - Hood Insulation

Removal and Installation

Removal

1. Open hood and fit fender covers.
2. Slacken and remove expander screws from pad retainers.

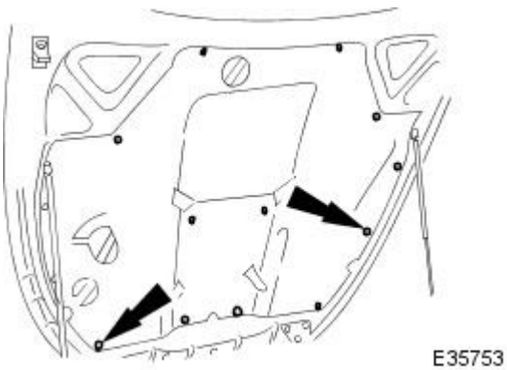

3. Commencing at bottom, remove insulation pad plastic retainers and remove pad from hood.

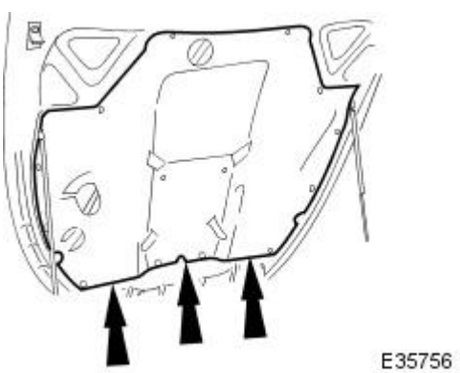

Installation

1. Position insulation pad on hood and commencing at top, fit and fully seat plastic retainers.
2. Gently drive in and fully seat expander screws in retainers.
3. Remove fender covers and close hood.

Body Closures - Hood Strut

Removal and Installation

Removal

1. Open hood and fit fender covers.
2. Fit supports to hood.
3. Release strut upper retaining clip and remove strut from hood pivot.

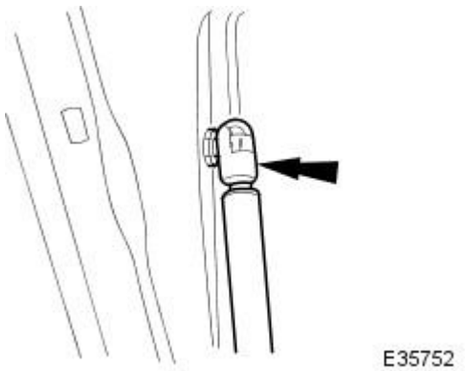

4. Release strut lower retaining clip and remove strut from vehicle.

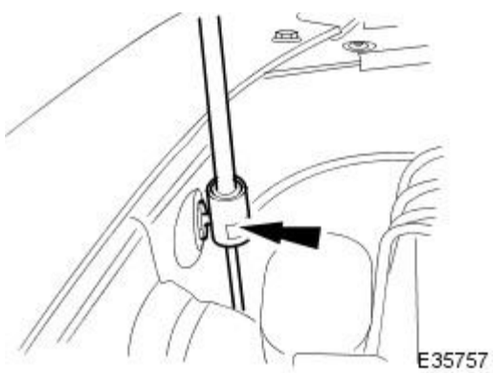

Installation

1. Fit strut onto lower pivot ensuring that retaining clip is fully seated.
2. Extend strut and fit onto hood pivot ensuring that retaining clip is fully seated.
3. Remove hood supports and fender covers.
4. Check that hood closes correctly.

Body Closures - Luggage Compartment Lid

Removal and Installation

Removal

1. Remove battery cover and disconnect ground cable from battery terminal. Refer to 86.15.19.
2. Remove and discard the twenty fasteners securing insulation pad to trunk lid and remove insulation pad.

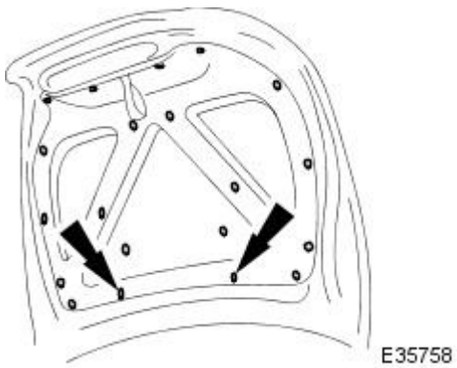

3. Remove trunk lid wiring harness.
4. Remove rear number plate lamp assembly.
5. Release rubber grommet from trunk aperture and pass rear harness and multiplug through aperture.

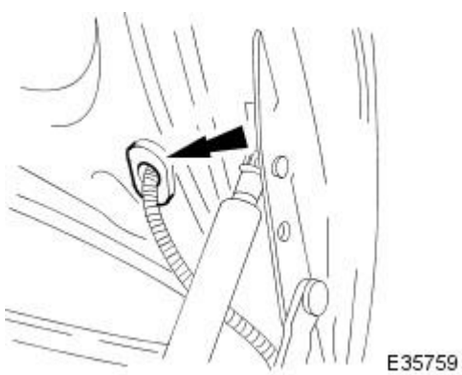

6. Position rear harness to trunk hinge shield for access.

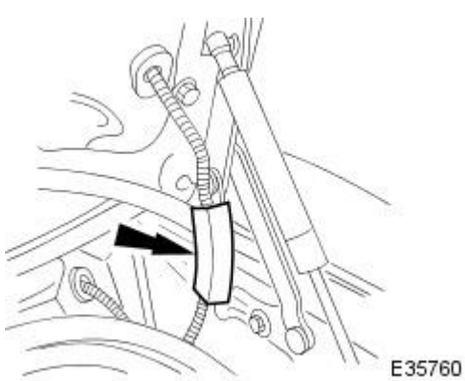

7. Remove trunk lid rubber stops.

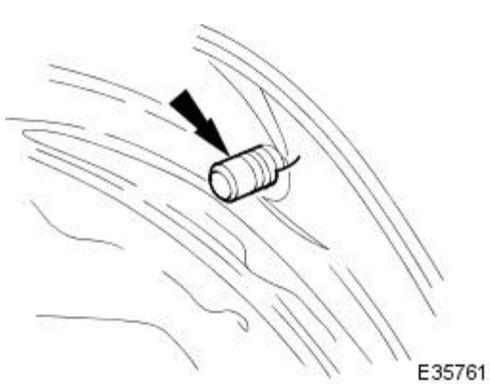

8. Fit supports to trunk lid.

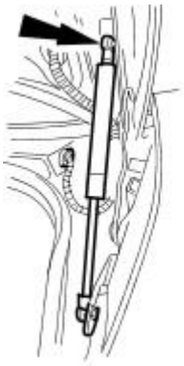

9. Release gas support struts from trunk lid pivots.

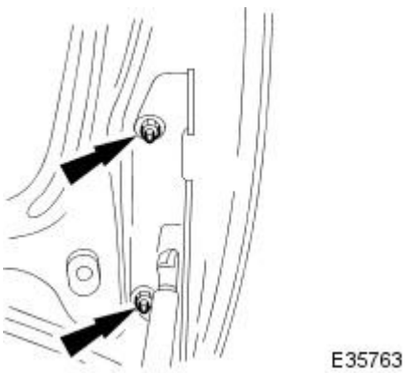

10. With assistance to prevent trunk lid from moving, slacken and remove bolts securing hinges to trunk lid.

11. Remove trunk lid from vehicle.

12. Slacken and remove number plate securing screws and remove number plate from mounting bracket.

13. Drill out rivets securing number plate mounting bracket to trunk lid.

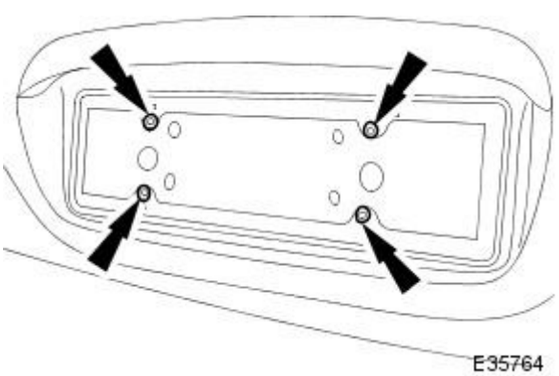

Installation

1. Position number plate mounting bracket on trunk lid and secure with new rivets.

2. Position number plate on mounting bracket and fit and tighten securing screws.

3. With assistance, position trunk lid on vehicle and fit but do not tighten lid to hinge securing bolts.

4. Check and as necessary adjust trunk lid alignment. Refer to 76.19.03.

5. Fit rubber stops to trunk lid.

6. Reposition rear harness to trunk lid hinge shield.

7. Pass rear harness and multiplug through trunk aperture and rubber grommet and seat grommet in aperture.

8. Install harness in trunk lid.

9. Fit rear number plate lamp assembly. Refer to 86.40.86.

10. Position insulation pad on trunk lid underside and secure with twenty new fasteners.

11. Connect ground cable to battery terminal and fit battery cover. Refer to 86.15.15.

Published: 11-May-2011

Body Closures - Luggage Compartment Lid Opening Weatherstrip

Removal and Installation

Removal

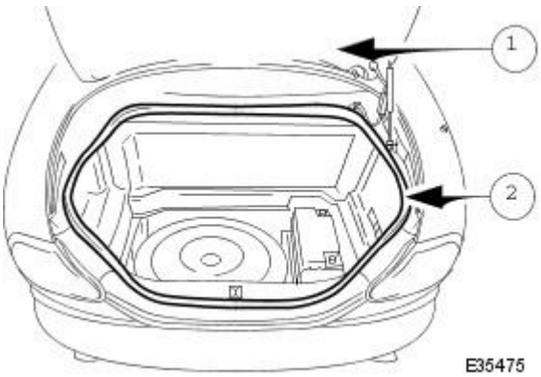

1. Remove trunk lid seal.

1. Open trunk lid.
2. Starting at front of trunk aperture, withdraw seal from flange exercising care on reaching bonded joint at rear.

Installation

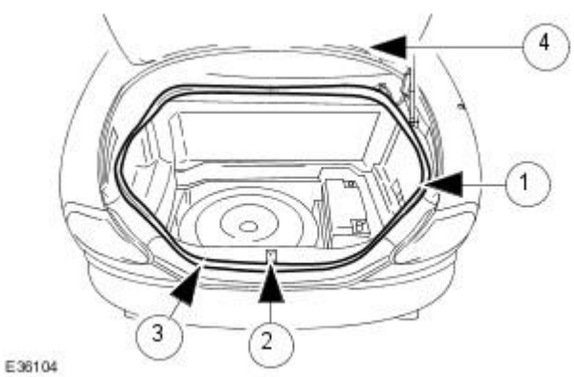

1. Fit trunk lid seal.

1. Ensure that trunk flange is clean and free from oil or grease.
2. Position seal with bonded joint adjacent to trunk latch.
3. Commencing at bonded joint, fit and fully seat seal onto trunk flange, guiding it between rear trunk trim and rear panel. Leave radius 3 until last, then stretch to tension in position.
4. Check that trunk lid closes correctly.

Body Closures - Luggage Compartment Lid Strut

Removal and Installation

Removal

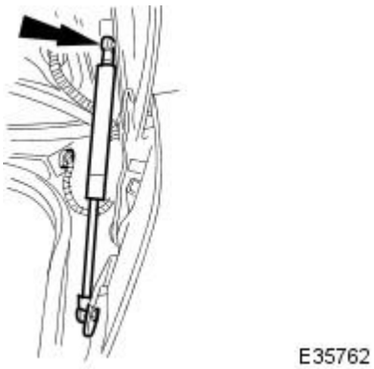

1. Open trunk lid and fit a suitable temporary support under.
2. Release strut upper retaining clip and remove strut from trunk lid pivot.

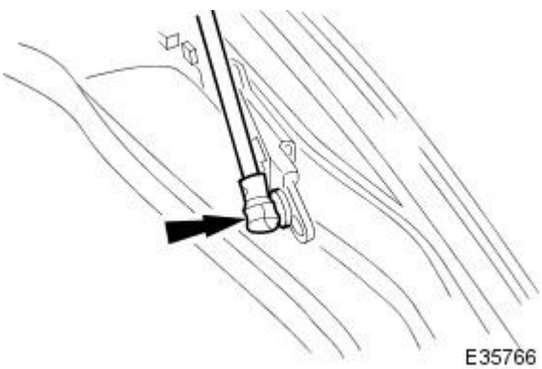

3. Release strut lower retaining clip, remove strut from trunk pivot and remove strut from trunk.

Installation

1. Fit strut lower end to trunk pivot ensuring that retaining clip fully seats.
2. Extend strut and fit upper end to trunk lid pivot ensuring that retaining clip fully seats.
3. Remove temporary support and check that trunk lid closes satisfactorily.

Interior Trim and Ornamentation -

Torque Specifications

Description	Nm	lb-ft	lb-in
Seat belt upper anchor retaining bolt	34 - 46	25 - 34	-

Interior Trim and Ornamentation - Interior Trim

Description and Operation

Carpets

The interior carpets which incorporate floor insulation and are molded in two pieces joined at the center line below the center console, cover the entire floor area and the inner door sills, and are color co-ordinated to the interior trim and seats. The door sills are additionally fitted with polished tread plates bearing 'Jaguar XK8' inscriptions. While the floor carpets are common to the convertible and coupe models, an additional section of carpet trims the convertible top stowage area. The coupe rear parcel shelf is trimmed to match the headlining cloth. The shelf trim is secured to the rear seat squab by two screws and to the center of the shelf by four speaker or blank plate screws, and is supported at the rear by two foam blocks.

Fascia

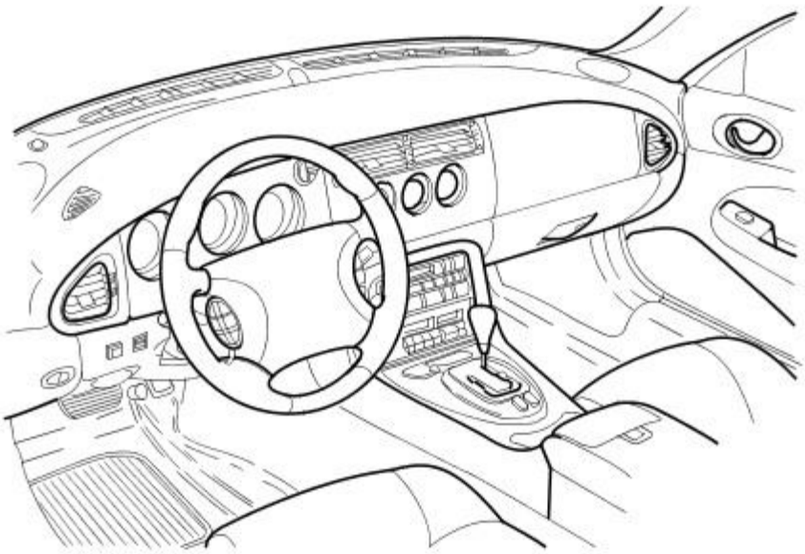

E36103

The full width, slush molded, soft feel PVC fascia is faced with maple or walnut burr veneer. In addition to the air conditioning and central, outer and demisting vents, it accepts instrument packs dedicated to market requirements. A center switchpack and the ICE head unit are also incorporated in the fascia.

A lockable and illuminated glove box is provided on the passenger side, and fuse panels are installed at each end.

'A' Posts

'A' Post Finishers

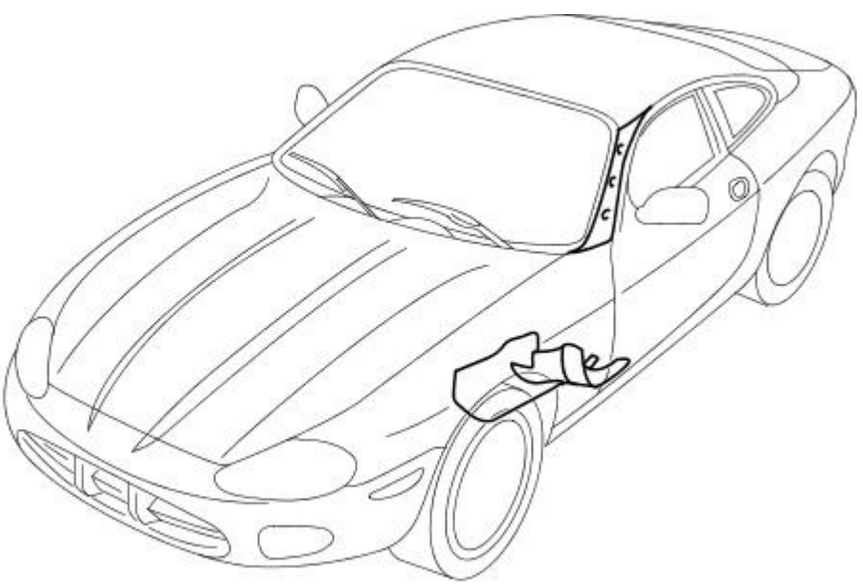

E33668

Grained UEV post finishers color matched to upper trim, are common to convertible and coupe.

The inner finishers are secured to the pillars by studs and BIW retainers, the upper finishers which accommodate an occupancy sensor in the passenger side only are molded to the pillar contours and wiring channels and secured by steel clips inserted into BIW slots. A hood release lever is located in the LH side inner finisher.

Coupe Roof

Coupe Roof Lining Fixing Points

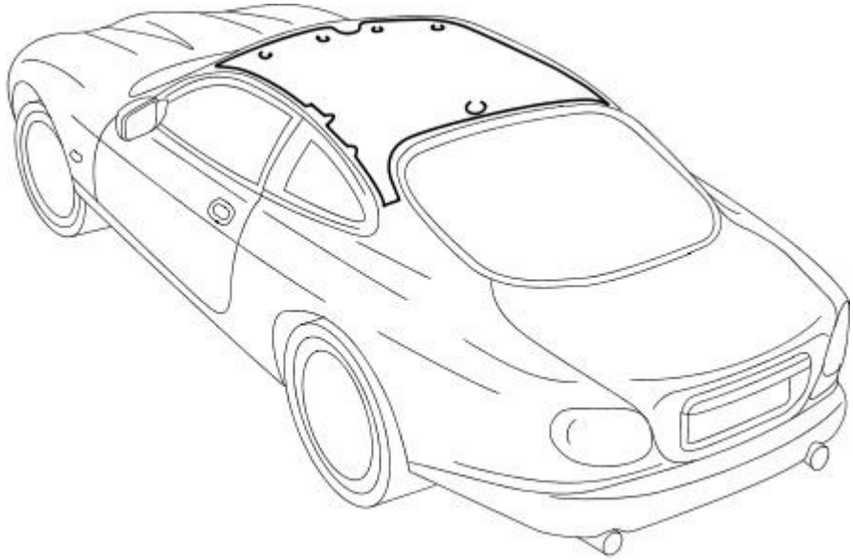

E33669

The 6 mm thick, molded, single piece cloth roof lining is color keyed to the interior trim and supported by sun-visor fixings at the front, a concealed fixing behind the central interior lamp and two body tangs at each side. An overhead console installed centrally at the front of the roof is common to both models and incorporates two courtesy lamps, switchable map/reading lights, a glass breakage sensor and two occupancy sensors. An additional courtesy lamp is installed centrally in the roof over the rear seats.

Convertible Top

The convertible top has a transverse external seam and a fully padded interior incorporating a full length headlining with backlight surround panel. The heated backlight is bonded in position to achieve a semi-flush finish.

The windshield header seal has been specifically designed to achieve reductions in noise levels and superior weatherproofing and aerodynamics. A grained UEV head rail finisher is secured in position by the sun visor fixings.

Doors

Door Trim and Water Shedder

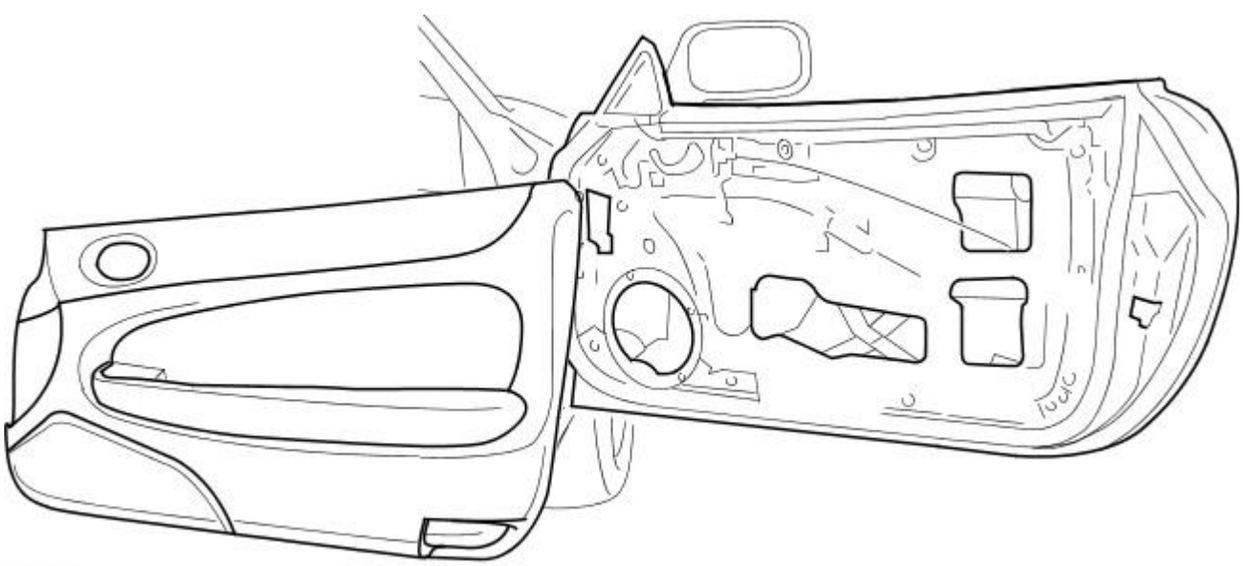

E34534

The doors are common to coupe and convertible and have dual seals and vacuum-formed water shedders with separate speaker curtains to provide internal insulation. The door casings are trimmed in UEV with ambla center pads and integral pockets are attached to the inner panels by plastic studs and retainers and a large dowel. The top rolls are integral with the door casings and trimmed to match the upper fascia.

A leather trimmed armrest attached to each door casing by plastic fixings, is secured to the door by a screw passed through a pull cup into a bracket. An inset maple or burr walnut veneer switch pack is held in position by a single screw and captive nut.

Rear Quarter Casings

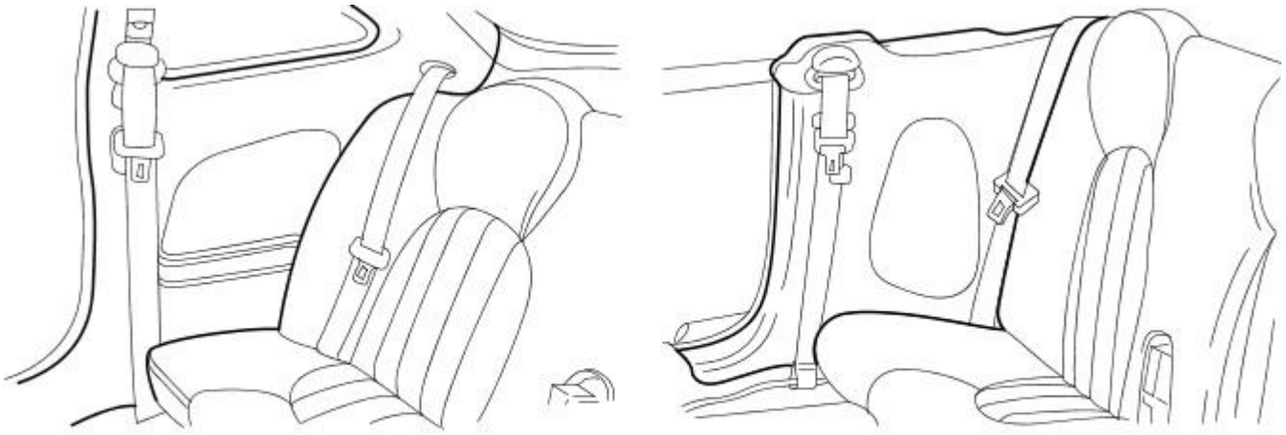

E 33670

The rear quarter casings are individually styled to suit installation in either the coupe or convertible.

Both styles are trimmed in ambla and incorporate acoustic cloth-covered speakers. Coupe casings are additionally fitted with ambla trimmed armrests and stowage trays.

Convertible rear quarter casings are secured at the rear by dowels locating in the seat squab panel, and at the front by spring steel clips locating in the 'B' posts. Convertible rear quarter casings incorporate an occupancy sensor located passenger side in the trimmed quarter capping. This assembly must be removed and electrically disconnected before removing the rear quarter casing. Coupe rear quarter casings also accommodate an occupancy sensor in the passenger side only and are retained by spring steel clips located in the cantrails and 'B' posts and a screw passed through each front seat belt escutcheon. A plastic clip in each coupe rear quarter engages in the parcel shelf.

Trunk

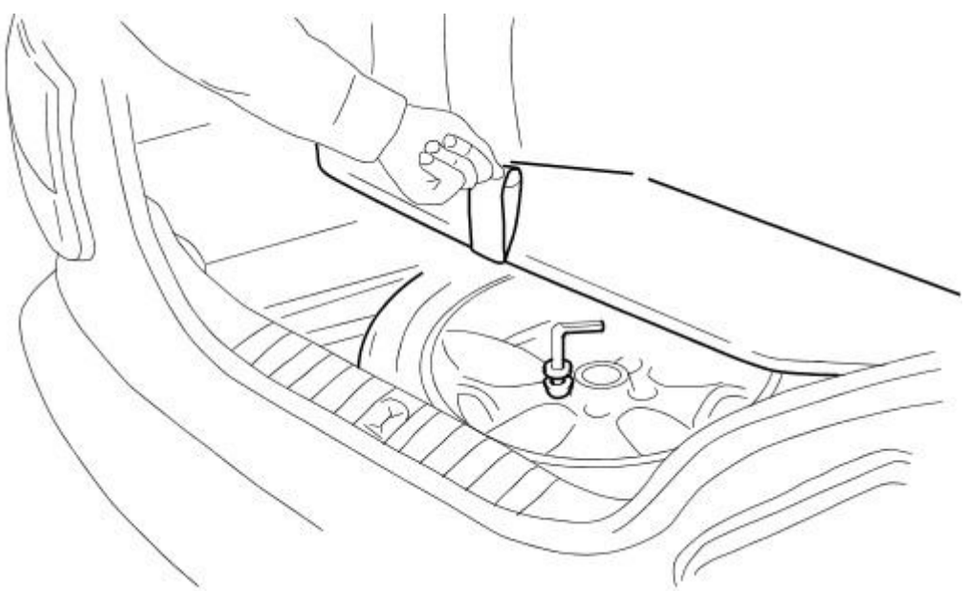

E 34489

The trunk has a two-height load floor structure in order to accommodate either the full size or space-saver spare wheel. When the space saver wheel is carried, a removable center floor section is recessed in the spare wheel well. For the full size spare wheel, the floor is a one piece full-width removable section. The trunk lid, front and side casings and floor are lined with molded single color carpet.

The trunk lid is produced in two styles to suit convertible and coupe. For some markets, a warning triangle is located in the trunk lid lining.

Interior Trim and Ornamentation - A-Pillar Trim Panel

Removal and Installation

Removal

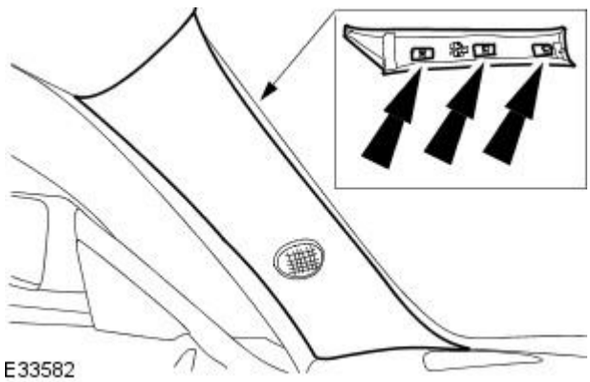

1. Disconnect the battery ground cable.
2. Detach the 'A' post upper trim pad.
   - Remove and discard any damaged retaining clips.

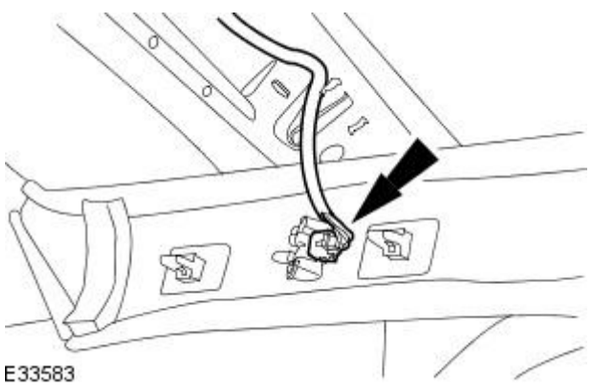

3. Remove the 'A' post trim pad.
   - Disconnect the occupancy sensor electrical connector.

Installation

1. NOTE: Install new retaining clips if damaged.

   To install, reverse the removal procedure.
2. Carry out the battery reconnection procedure. For additional information, refer toSection 414-01 Battery, Mounting and Cables.

Interior Trim and Ornamentation - Coat Hanger

Removal and Installation

Removal

1. Move seat back to fully forward position.
2. Carefully lift screw cover flap for access.

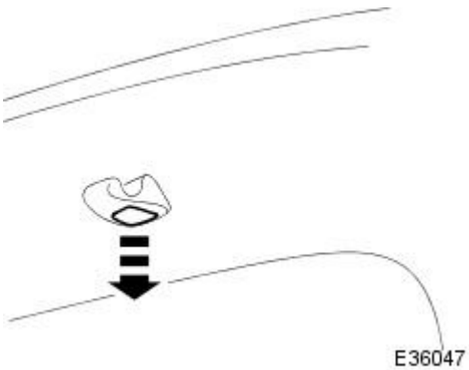

3. Remove hanger hook securing screw.

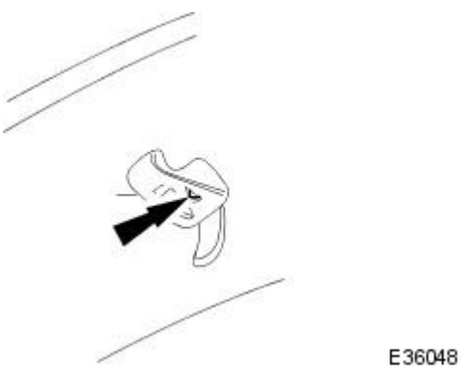

4. Remove hanger hook from cantrail aperture.

Installation

1. Position hanger hook in cantrail aperture and install securing screw.

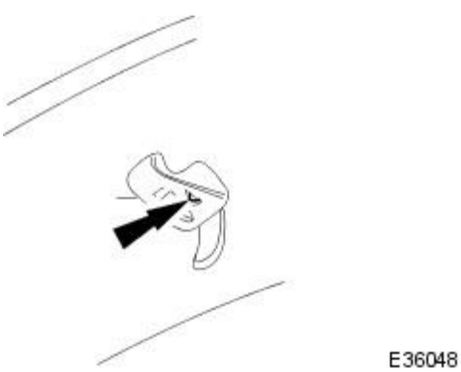

2. Fully seat screw cover flap.
3. Return seat back to upright position.

Interior Trim and Ornamentation - Cowl Side Trim Panel

Removal and Installation

Removal

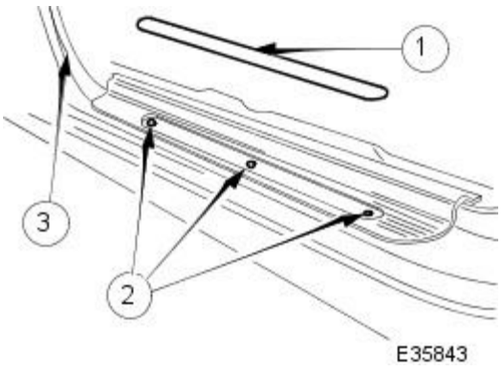

1. Remove the treadplate.

• NOTE: The finisher can be easily damaged, extra care must therefore be exercised during removal.

1. Using a thin plastic lever, carefully remove the treadplate finisher and place face uppermost on sheet of clean dry polythene.
2. Slacken and remove treadplate securing screws and remove treadplate.
3. Remove front of draught welt from aperture flange.

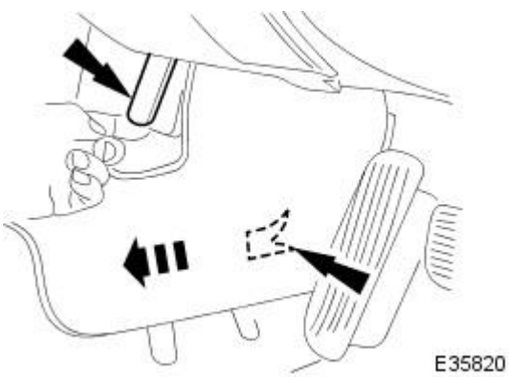

2. Exercising care to avoid damaging surface, pull pad rearwards to release retainer from 'A' post stud. On driver side it will be necessary to pull and hold hood release rearwards.

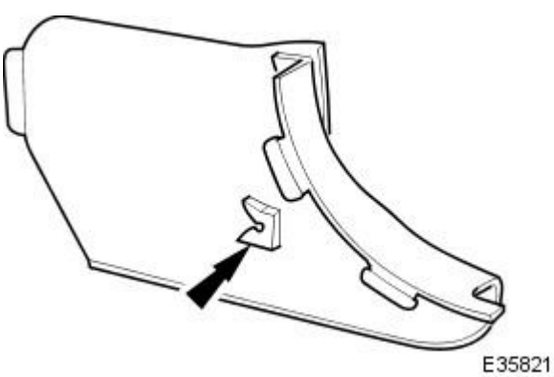

3. Withdraw trim pad front tang from toeboard and remove trim pad.

Installation

1. Position trim pad at 'A post and engage retainer on securing stud. For access at driver side it will be necessary to pull and hold hood release lever rearwards.

2. Ensuring that tang engages in toeboard carpet slot, push trim pad forward to fully seat retainer on stud.

3. Fit draught welt section and treadplate.

1. Ensure that lower rear draught welt section is fully seated on aperture flange.
2. Fit and fully seat front welt section over aperture flange aligning end with panel joint.
3. Position sill tread plate and fit and tighten three securing screws.
4. Fit treadplate finisher. If finisher has been renewed, remove protective film.

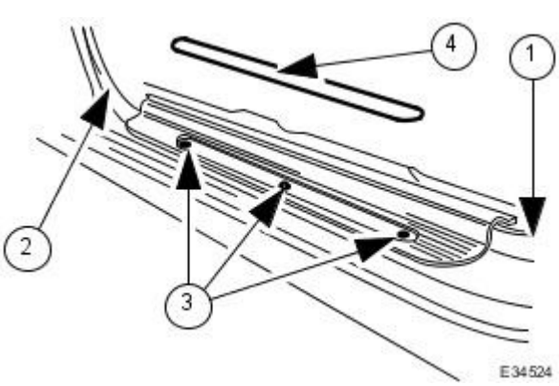

Interior Trim and Ornamentation - Door Trim Panel

Removal and Installation

Removal

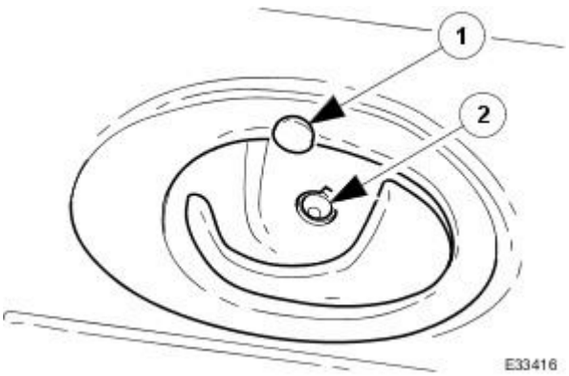

1. Remove door escutcheon.

1. Holding door handle in the open position, remove the escutcheon securing screw cover.
2. Slacken and remove the escutcheon securing screw, remove escutcheon from door casing and return door handle to closed position.

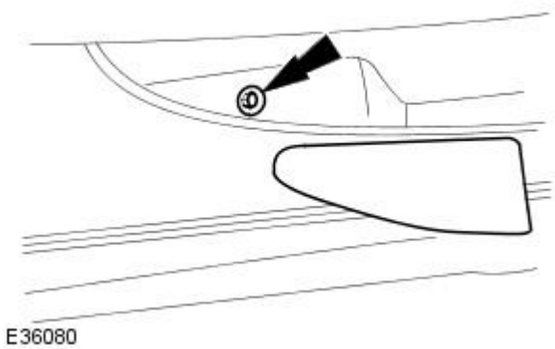

2. Remove trim mat from rear of door pocket and slacken and remove the securing screw.

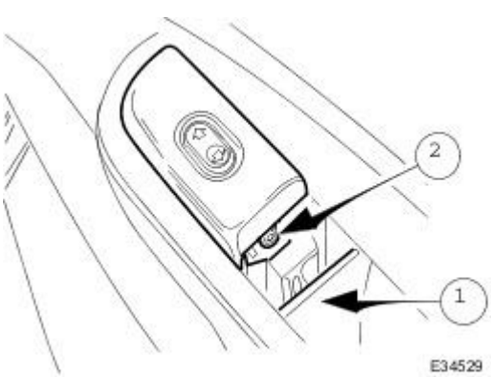

3. Position door switch pack for access.

1. Using a suitable plastic hook, release plastic stud and remove trim from front of door pocket.
2. Slacken and remove screw securing switch pack to door casing and position switch pack for access.

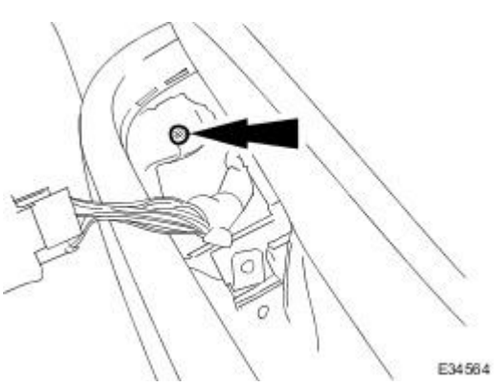

4. Slacken and remove screw securing casing to door bracket.

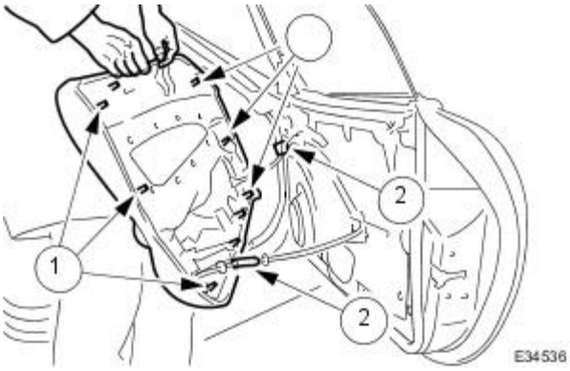

5. Remove door casing for access to multiplugs.

1. Release eight studs securing the casing to the door.
2. Position the casing for access and disconnect the door switch pack and puddle lamp multiplugs.

6. Remove door casing from vehicle and detach switch pack.

7. Remove puddle lamp lens.

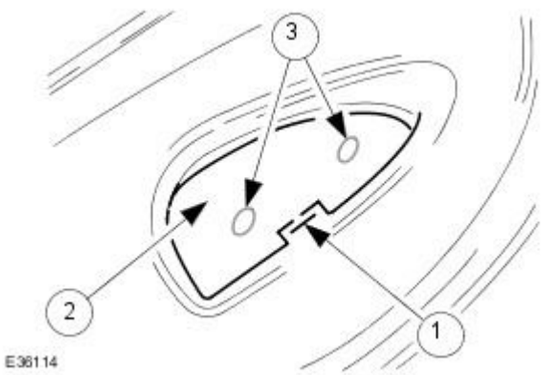

1. Move puddle lamp lens securing tab downwards.
2. Slide lens downwards to release it from the lamp assembly.
3. Slacken and remove two screws securing the puddle lamp assembly to the casing and remove puddle lamp from casing.

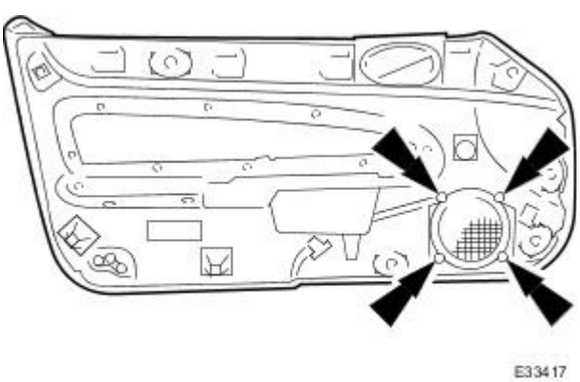

8. Slacken and remove the door speaker cover securing screws from lower face of trim pad and remove cover from casing.

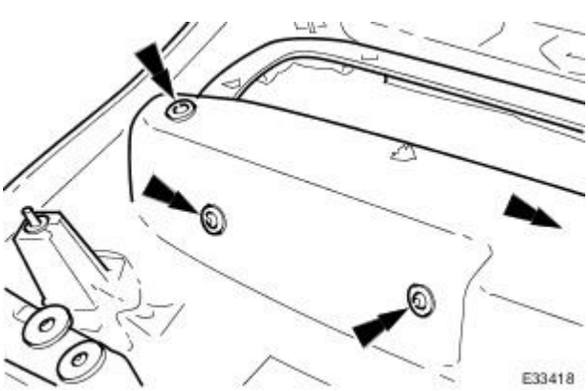

9. Slacken and remove four screws securing armrest to door casing and remove armrest from casing.

10. Remove securing studs from door casing.

Installation

1. Fit new securing studs to casing.

2. Position armrest on casing and fit and tighten the four securing screws.

3. Position speaker cover on casing and fit and tighten securing screws.

4. Position and align puddle lamp assembly on casing and fit and tighten two securing screws.

5. Fit lens to puddle light assembly.

6. Position but do not secure switch pack on casing.

7. Position casing at door and connect switch pack and puddle lamp multiplugs.

8. Align casing to door and press and fully seat securing studs into door locations.
9. Fit and tighten casing securing screw at front of switch pack location.
10. Align switch pack to casing and fit and tighten securing screw at rear.
11. Fit trim to front of door pocket and fully seat plastic fastener.
12. Fit and tighten casing securing screw to rear of door pocket.
13. Fit trim mat to rear of door pocket.
14. Holding door handle in open position, fit escutcheon to casing.
15. Fit and tighten securing screw and fit securing screw cover.
16. Return door handle to closed position.

Interior Trim and Ornamentation - Driver Side Floor Covering

Removal and Installation

Removal

1. Remove battery cover and disconnect ground cable from battery terminal. Refer to 86.15.19.
2. Remove door sill treadplate. Refer to 76.76.01.
3. Remove driver seat. Refer to 76.70.01.90.
4. Remove 'J' gate surround. Refer to 76.25.24.
5. Remove centre console for access. Refer to 76.25.01
6. Remove rear quarter casing for access. Refer to 76.13.73.
7. Remove rear seat cushion. Refer to 76.70.37.
8. Remove 'A' post lower trim pad. Refer to 76.13.30.
9. Exercising care, use a thin blade to release footrest tangs and spigots from mounting plate.

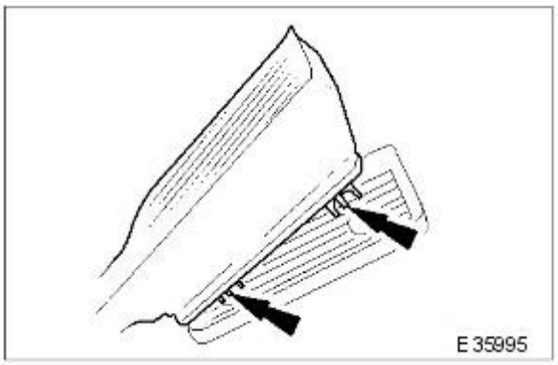

10. Remove footrest mounting plate securing bolts and remove mounting from vehicle.

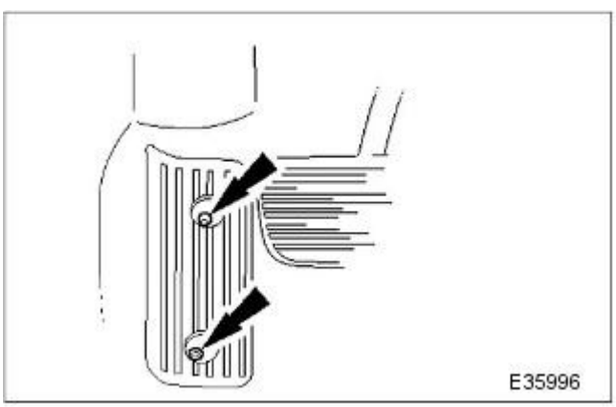

11. Slacken and remove toeboard fastener.

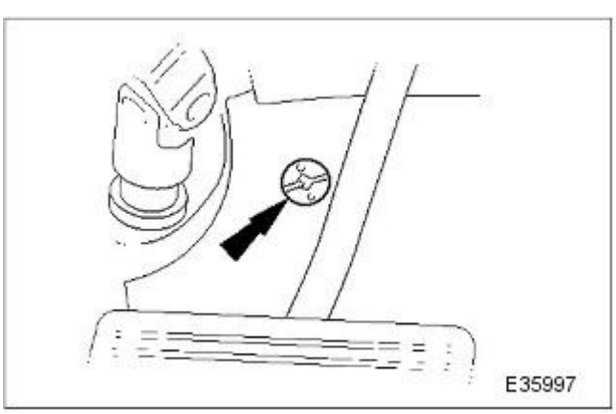

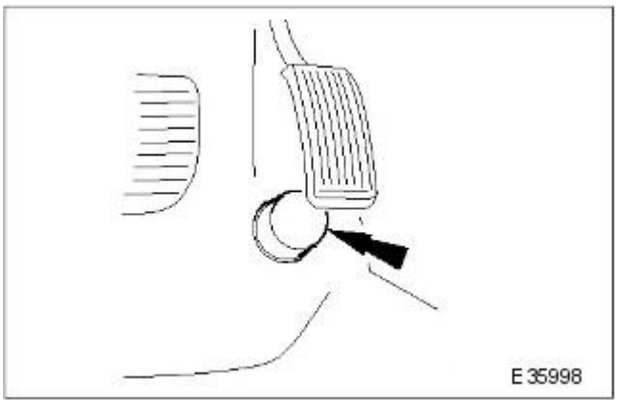

12. Release carpet from around kickdown switch and toeboard area.

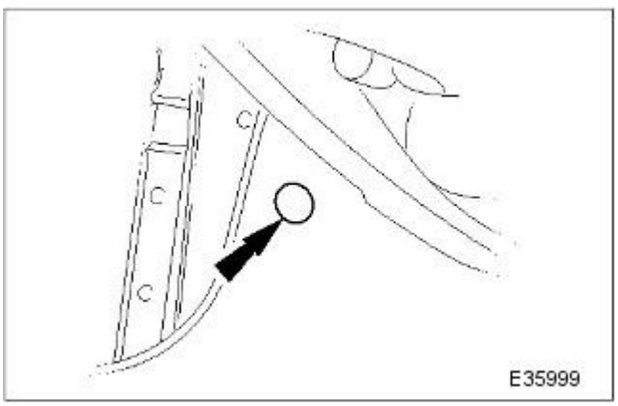

13. Remove and discard fastener securing carpet at fascia/console area.

14. Remove handbrake lever trim and ensure that lever is left in fully upright position. Refer to 76.13.63.

15. Withdraw draught welt and release carpet retaining clips from door aperture flange.

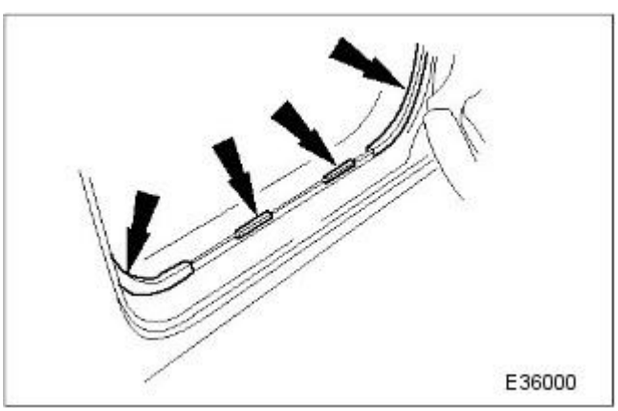

16. Free rear of carpet from rear seat cushion locater.

17. Lift rear of carpet and pass seat harness and connector through.

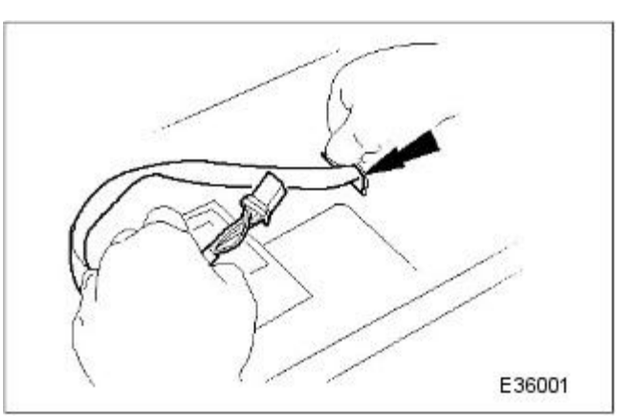

18. Fold front of carpet back from footwell.

19. Lift carpet over handbrake lever, ensuring carpet is free, pull rearwards and remove it from vehicle.

Installation

1. Position carpet in vehicle fitting it over handbrake lever.

2. Align carpet with toeboard and kickdown switch.

3. Install carpet to door aperture retaining clips.

4. Install and fully seat draught welt on door aperture flange.
5. Install cover on handbrake lever. Refer to 76.13.63.
6. Position carpet over rear seat cushion locater.
7. Install and fully seat new fastener securing carpet to fascia/console area.
8. Install fastener securing carpet to toeboard.
9. Position driver footrest mounting bracket and install securing bolts.
10. Install driver foot rest on mounting bracket.
11. Install 'A' post lower trim pad. Refer to 76.13.30.
12. Install rear seat cushion. Refer to 76.70.37.
13. Install rear quarter casing. Refer to 76.13.73
14. Install centre console. Refer to 76.25.01.
15. Install 'J' gate surround. Refer to 76.25.24.
16. Install driver seat and adjust to original position. Refer to 76.70.01.90.
17. Install door sill treadplate. Refer to 76.76.01.
18. Connect ground cable to battery terminal and install battery cover. Refer to 86.15.15.

Interior Trim and Ornamentation - Headliner

Removal and Installation

Removal

1. Remove the front seats. Refer to 76.70.01.90.
2. Remove the rear seat cushion and squab. Refer to 76.70.37 and 76.70.38.
3. Remove the battery cover and disconnect earth cable from the battery terminal. Refer to 86.15.19.
4. Remove the rear quarter casings. Refer to 76.13.73.
5. NOTE: Right-hand shown, left-hand similar.

   Remove the front seatbelt height adjusters.

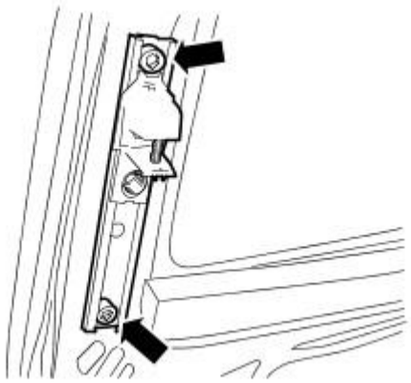

6. Remove the combined grab handles and coat hanger hooks.
7. Remove the 'J' gate surround. Refer to 76.25.24.
8. Remove the center console. Refer to 76.25.01.
9. Disconnect the brake shift interlock actuator and transmission control switch electrical connectors.

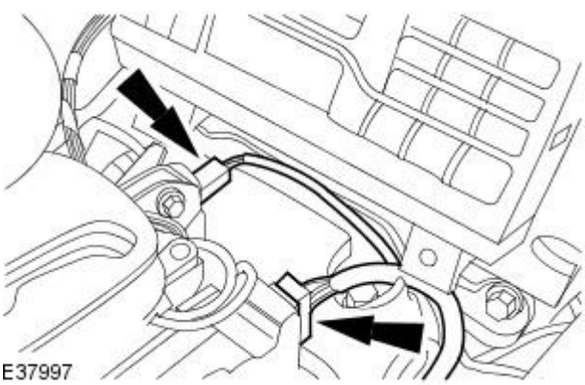

10. Release the transmission selector lever assembly.

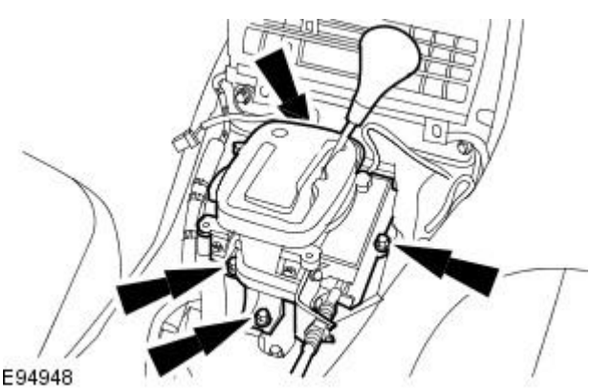

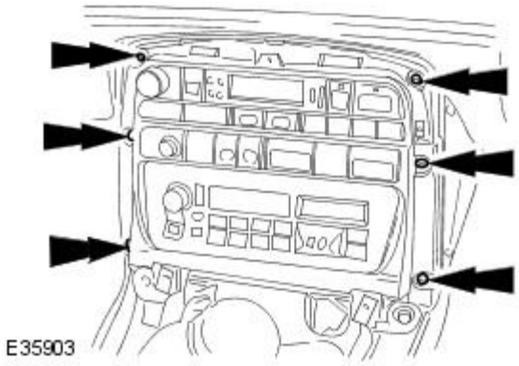

11. Remove the radio console securing screws and partially withdraw the console for access.

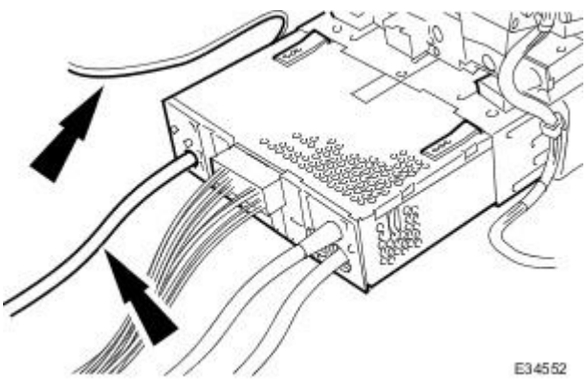

12. Release the radio assembly.

- Disconnect the console harness multiplugs and aerial co-axial connector.
- Remove the nut securing the earth lead and remove the lead from the stud.
- Disconnect the radio harness multiplug and position harness clear of center console.
- Disconnect the compact disc player 'Din' plug from the radio.

13. Remove the 'A' post upper trim panels. Refer to 76.13.31.

14. Remove the sun visors. Refer to 76.10.47.

15. Remove the sun visor retention bezels. Refer to 76.10.58

16. Remove the roof console. Refer to 76.13.69.

17. Position the headlining for access.

- Easing the body tabs back to release the headlining, progressively move the headlining downwards to access the interior light multiplug.
- Disconnect the interior light multiplug and free the headlining from the remaining body tabs.

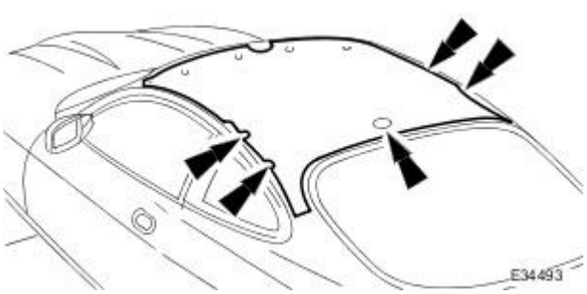

18. CAUTION: Make sure the headliner must not be creased or folded during removal or installation. Failure to follow this instruction may result in damage to the component.

Lift and turn the headlining through 90 degrees, tilt into the passenger footwell and remove from the vehicle.

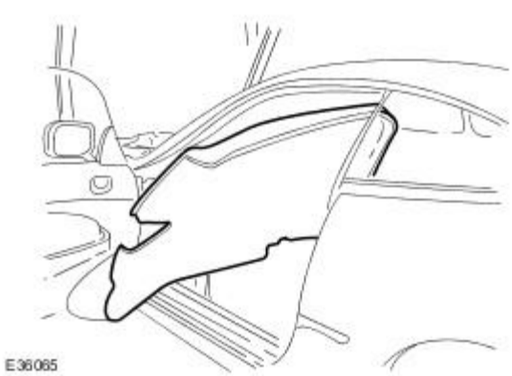

19. Remove the interior light from headlining.

Installation

1. Fit the interior light to the headlining.

2. Place the headlining into the vehicle tilted into position with one end in the footwell and the opposite end at top of the door aperture.

3. Lift and rotate the headlining through 90 degrees.

4. Connect the interior light multiplug.

5. Position the headlining at the roof and reposition the door aperture seals to retain it.

6. Fully seat the headlining ensuring correct positioning over the backlight flange.

7. Bend the body tabs into position to secure the headlining.
8. Fit the roof console. Refer to 76.13.69.
9. Fit the sun visor retention bezels. Refer to 76.10.58
10. Fit the sun visors. Refer to 76.10.47
11. Fit the 'A' post upper trim panels. Refer to 76.13.31.
12. Connect the radio harness and radio console harness multiplugs.
13. Position the ground lead to the radio stud and install the securing nut.
14. Connect the aerial co-axial lead to the radio and stow excess harness and lead lengths into the radio mounting aperture.
15. Fully seat the radio into the console, ensuring that the retaining clips are fully seated and harnesses and leads do not obstruct.
16. Position the radio console and install the securing screws.
17. Install the transmission selector lever assembly.
    - Tighten to 11 Nm.

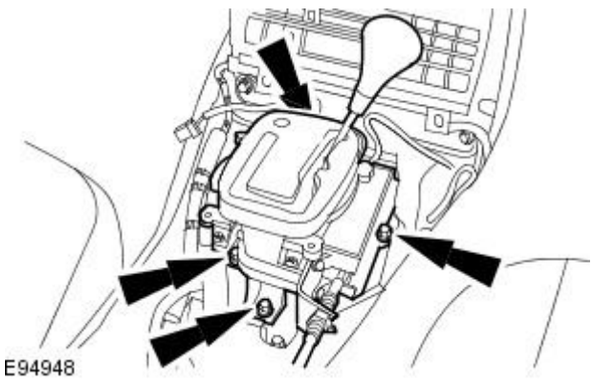

18. Connect the brake shift interlock actuator and transmission control switch electrical connectors.
19. Fit the center console assembly. Refer to 76.25.01.
20. Fit the 'J' gate surround. Refer to 76.25.24.
21. Fit the combined grab handles and coat hanger hooks.
22. NOTE: Right-hand shown, left-hand similar.

    Fit the front seatbelt height adjusters.
    - Tighten to 20 Nm.

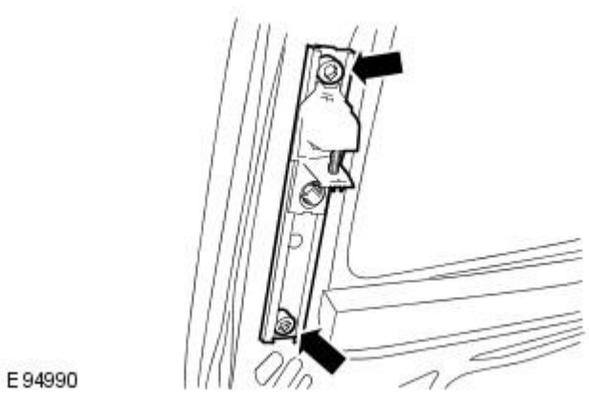

23. Fit the rear quarter casings. Refer to 76.13.73.
24. Fit the rear seat squab and cushion. Refer to 76.70.37 and 76.70.38.
25. Connect the earth cable to battery terminal and fit battery cover. Refer to 86.15.15.
26. Fit the front seats. Refer to 76.70.01.90.

Published: 11-May-2011

Interior Trim and Ornamentation - Luggage Compartment Front Trim Panel

Removal and Installation

Removal

1. Remove battery cover.
2. Remove trunk floor carpet.
3. Remove front liner, exercising care when withdrawing ends from behind side liners.

Installation

1. Easing side liners inwards, fit and fully seat trunk front liner.
2. Fit trunk floor carpet.
3. Fit battery cover.

Interior Trim and Ornamentation - Luggage Compartment Rear Trim Panel

Removal and Installation

Removal

1. Remove battery cover and disconnect ground cable from battery terminal. Refer to 86.15.19.
2. Remove trunk floor carpet.
3. Remove and discard the eight fir tree fasteners securing trunk rear finisher to rear panel.

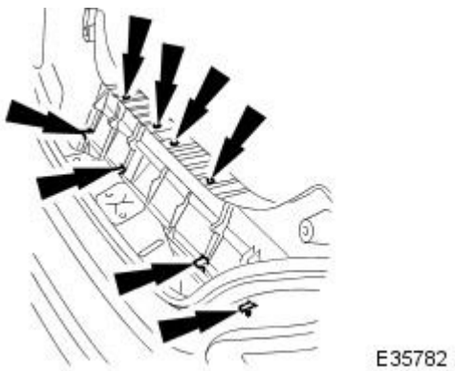

4. Position trunk rear finisher for access, disconnect trunk lamp harness multiplugs and remove lamp assemblies.

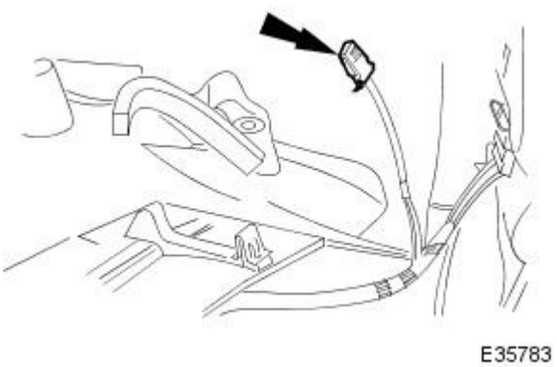

5. Remove rear finisher from trunk.

Installation

1. Fit and fully seat lamp assemblies in trunk rear finisher.
2. Position rear finisher in trunk and connect lamp harness multiplugs.
3. Fit and fully seat finisher on trunk rear panel and secure with new fir tree fasteners.
4. Fit trunk floor carpet.
5. Connect ground cable to battery and fit battery cover. Refer to 86.15.15.

Published: 11-May-2011

Interior Trim and Ornamentation - Luggage Compartment Side Trim Panel

Removal and Installation

Removal

1. Remove battery cover.
2. Remove trunk floor carpet.
3. Remove trunk rear finisher. Refer to 76.19.44.
4. Remove rear lamp covers. Refer to 86.40.74.
5. If fitted, pass fuel filler flap emergency release cord through slot in LH side liner and withdraw liner from trunk.

Installation

1. Position side liner in trunk and where fitted, pass fuel filler flap emergency release cord through slot .
2. Finally position and seat liner.
3. Fit and fully seat rear lamp cover. Refer to 86.40.74.
4. Fit trunk rear finisher. Refer to 76.19.44.
5. Fit trunk front liner. Refer to 76.19.31.
6. Fit trunk floor carpet.
7. Fit battery cover.

Interior Trim and Ornamentation - Parcel Shelf2-Door

Removal and Installation

Removal

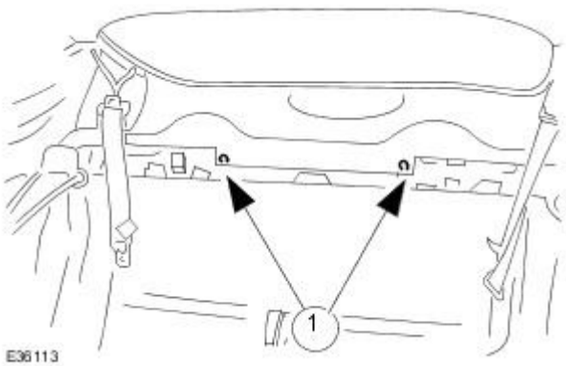

1. Remove rear seat cushion and squab. Refer to 76.70.37 and 76.70.38.

2. Remove rear quarter casings. Refer to 76.13.73.

3. Remove sub-woofer speaker cover and speaker. Refer to 86.51.05.

4. Remove rear parcel shelf.

1. Slacken and remove the two rear parcel shelf securing screws, withdraw shelf and remove from vehicle.

Installation

1. Position and fully seat rear parcel shelf.

2. Fit and tighten the two shelf securing screws.

3. Fit sub-woofer speaker and cover. Refer to 86.51.05.

4. Fit rear quarter casings. Refer to 76.13.73.

5. Fit rear seat squab and cushion. Refer to 76.70.37 and 76.70.38.

Interior Trim and Ornamentation - Passenger Air Bag Module Finish Panel

Removal and Installation

Removal

WARNING: FOLLOWING DISCONNECTION OF THE BATTERY, A PERIOD OF AT LEAST ONE MINUTE MUST BE ALLOWED TO ELAPSE BEFORE ANY WORK IS CARRIED OUT ON AN AIR BAG.

• NOTE: For safety reasons, the veneer panel is an integral part of the air bag deployment door and is not available as a separate service item.

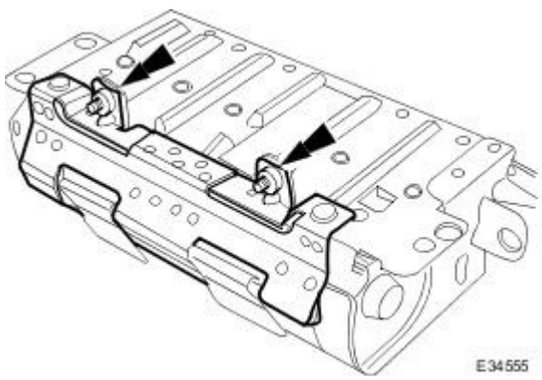

1. Remove battery cover and disconnect ground cable from battery terminal. Refer to 86.15.19.
2. Remove passenger air bag complete with deployment door. Refer to 76.73.37.
3. Slacken, remove and discard two bolts securing air bag tether bracket and deployment door to air bag module.

Installation

1. Position air bag tether bracket and deployment door on air bag module and secure with two new bolts.
2. Fit air bag assembly to fascia. Refer to 76.73.37.
3. Connect ground cable to battery terminal and fit battery cover. Refer to 86.15.15.

Interior Trim and Ornamentation - Passenger Side Floor Covering

Removal and Installation

Removal

1. Remove battery cover and disconnect ground cable from battery terminal. Refer to 86.15.19.
2. Remove door sill treadplate. Refer to 76.76.01.
3. Remove front passenger seat. Refer to 76.70.01.90.
4. Remove 'J' gate surround. Refer to 76.25.24.
5. Remove centre console for access. Refer to 76.25.01
6. Remove rear quarter casing for access. Refer to 76.13.73.
7. Remove rear seat cushion. Refer to 76.70.37.
8. Remove 'A' post lower trim pad. Refer to 76.13.30.
9. Remove 1/4 turn toeboard fastener.

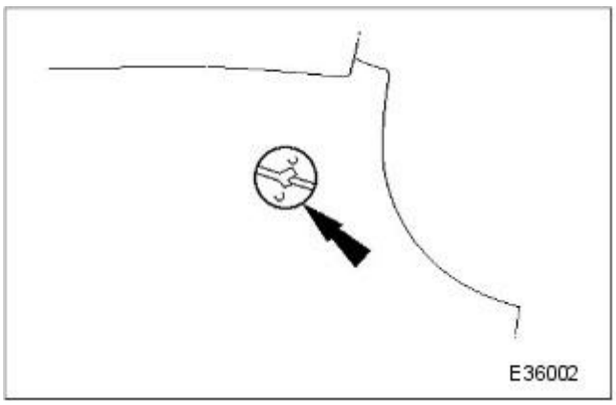

10. Remove and discard fastener securing carpet at facia/console area.

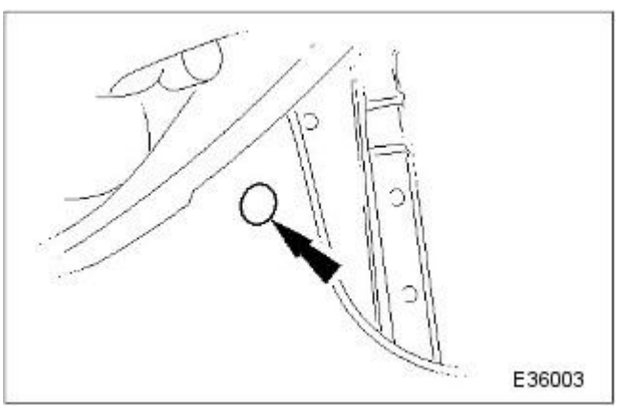

11. Withdraw draught welt and release carpet retaining clips from door aperture flange.

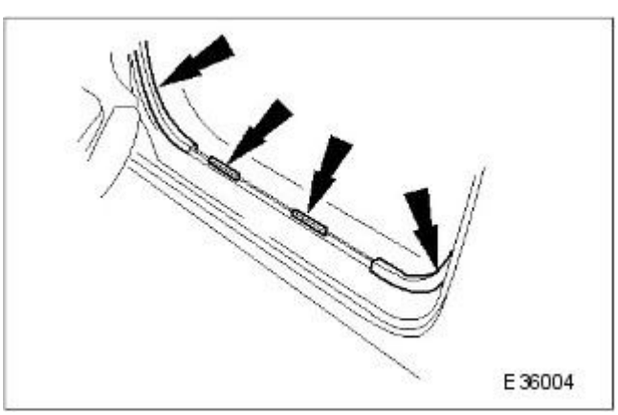

12. Free rear of carpet from rear seat cushion locater.

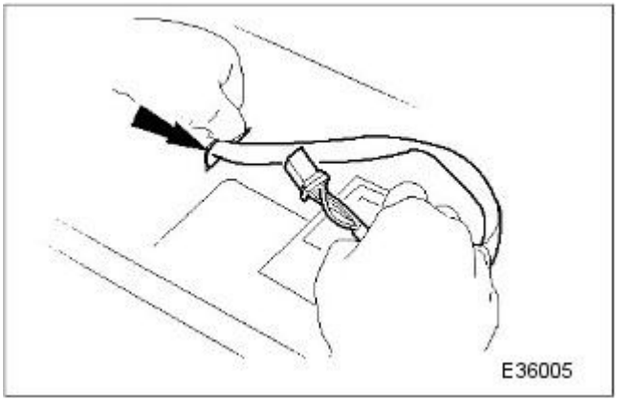

13. Lift rear of carpet and pass seat harness and connector through.

14. Fold front of carpet back from footwell.

15. Ensuring carpet is free, pull rearwards and remove it from vehicle.

Installation

1. Position carpet in vehicle.

2. Align carpet with toeboard.

3. Align carpet with heelboard and secure with clip.

4. Install carpet to door aperture retaining clips.

5. Install and fully seat draught welt on door aperture flange.

6. Install new fastener securing carpet to fascia/console area.

7. Install fastener securing carpet to toeboard.

8. Install 'A' post lower trim pad. Refer to 76.13.30.

9. Install rear seat cushion. Refer to 76.70.37.

10. Install rear quarter casing. Refer to 76.13.73

11. Install centre console. Refer to 76.25.01.

12. Install 'J' gate surround. Refer to 76.25.24.

13. Install passenger seat and adjust to original position. Refer to 76.70.01.90.

14. Install door sill treadplate. Refer to 76.76.01.

15. Connect ground cable to battery terminal and install battery cover. Refer to 86.15.15.

Published: 11-May-2011

Interior Trim and Ornamentation - Rear Quarter Panel ArmrestVehicles Without: Convertible Top

Removal and Installation

Removal

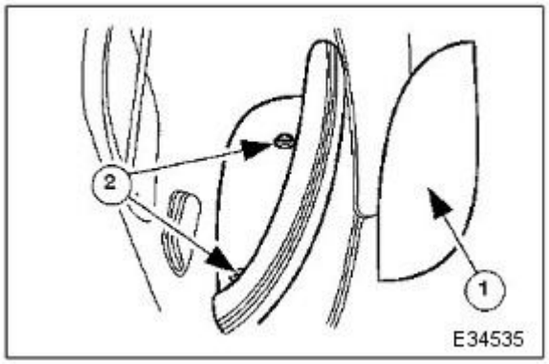

1. Using rear passenger entry knob, fold seat back fully forward.

2. Remove rear quarter armrest from casing.

1. Remove rubber mat from stowage tray.
2. Slacken and remove the two armrest securing screws and lift armrest clear of rear quarter casing.

Installation

1. Fit armrest to rear quarter casing.

- Position armrest on quarter casing and fit and tighten the two securing screws.
- Fit rubber mat to stowage tray.

2. Return seat back to upright position.

Published: 11-May-2011

Interior Trim and Ornamentation - Rear Quarter Panel Armrest and Speaker Grille2-Door

Removal and Installation

Removal

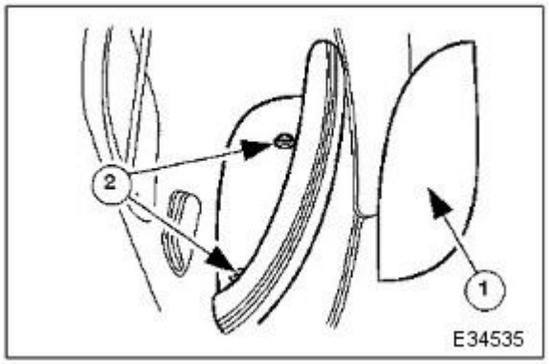

1. Using rear passenger entry knob, fold seat back fully forward.

2. Remove rear quarter armrest from casing.

1. Remove rubber mat from stowage tray.
2. Slacken and remove the two armrest securing screws and lift armrest clear of rear quarter casing.

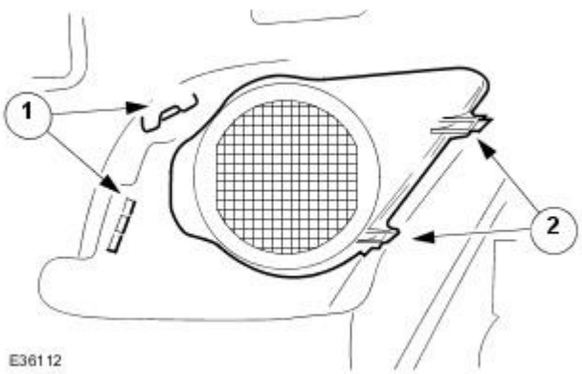

3. Remove speaker cover from casing.

1. Lift the two speaker cover front fasteners out of rear quarter casing spring clips.
2. Move cover forward to release two rear plastic tangs from casing and remove cover from the vehicle.

Installation

1. Fit speaker cover to rear quarter casing.

- Position speaker cover and locate rear retaining tangs in casing.
- Press and fully seat the two front retaining fasteners in the casing spring clips.

2. Fit armrest to rear quarter casing.

- Position armrest on quarter casing and fit and tighten the two securing screws.
- Fit rubber mat to stowage tray.

3. Return seat back to upright position.

Interior Trim and Ornamentation - Rear Quarter Upper Trim PanelConvertible

Removal and Installation

Removal

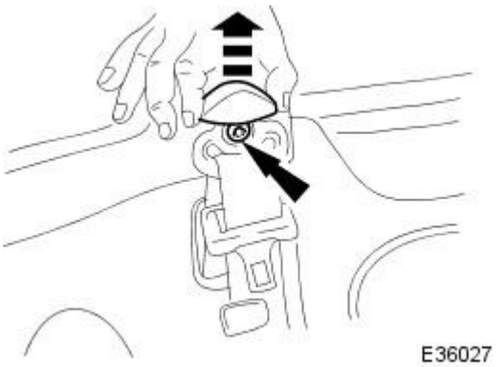

1. Fully lower convertible top.
2. Remove seat belt upper anchor.
   - Remove seat belt upper anchor bolt cover.
   - Remove seat belt upper anchor bolt.
   - Remove seat belt anchor and spacer.

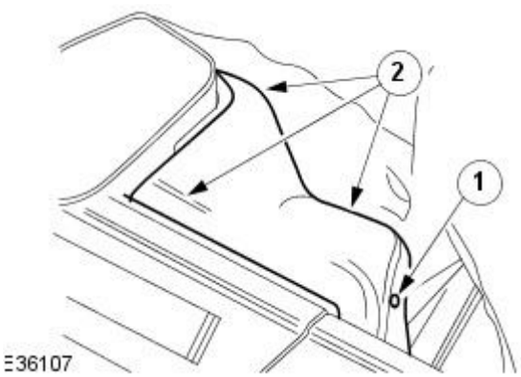

3. Remove rear quarter capping.
   1. Remove fastener securing rear quarter capping to 'B' post extension.
   2. Slacken and remove three screws securing the capping.
4. Lift rear quarter capping and remove from vehicle.

Installation

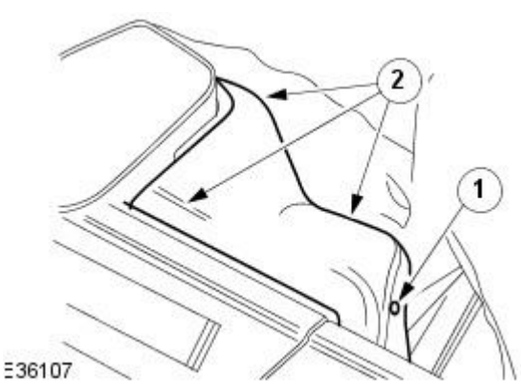

1. Install rear quarter capping.
   1. Using a new fastener secure rear capping to 'B' post extension.
   2. Install the three capping screws.
2. Install seat belt anchor spacer.
3. Position anchor on spacer.
4. Install seat belt upper anchor bolt and tighten to 34-46Nm.
5. Install seat belt upper anchor bolt cover.
6. Raise convertible top.

Interior Trim and Ornamentation - Scuff Plate Trim Panel

Removal and Installation

Removal

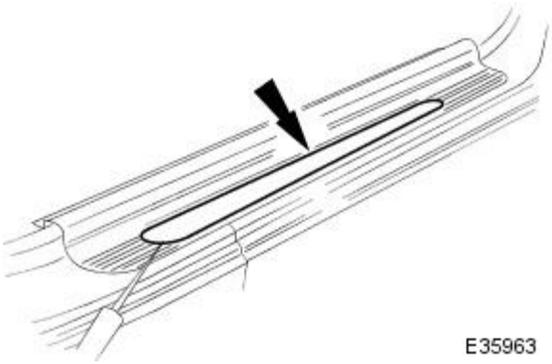

1. NOTE: The finisher can be easily damaged, care must therefore be exercised during removal.

Using a thin plastic lever and starting at one end, carefully remove the treadplate finisher and place face uppermost on sheet of clean dry polythene.

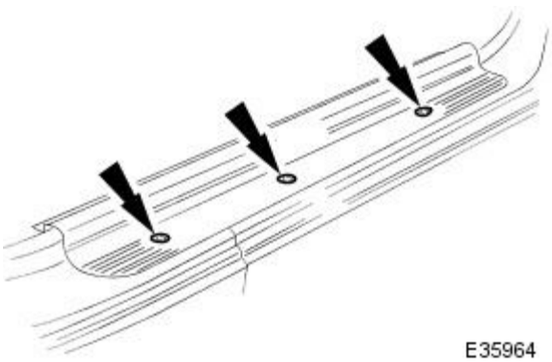

2. Remove treadplate securing screws and withdraw treadplate.

Installation

1. Ensure that draught welt is correctly positioned and fully seated on aperture flange.

2. Position sill tread plate and install three securing screws.

3. Ensure that sill contact area is clean and dry.

4. Install treadplate finisher, pressing firmly into place. If finisher has been renewed, remove protective film.

Interior Trim and Ornamentation - Sun Visor

Removal and Installation

Removal

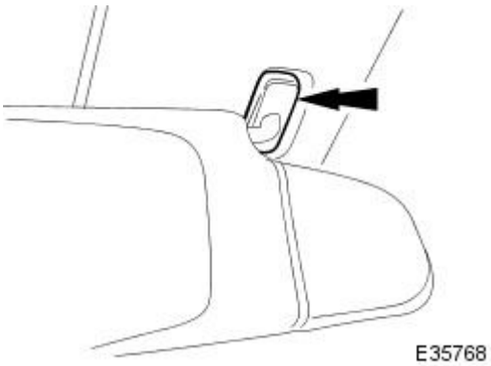

1. Turn sun visor downward, release from retention bezel and pivot outwards.
2. Carefully ease visor securing screw cover from base.

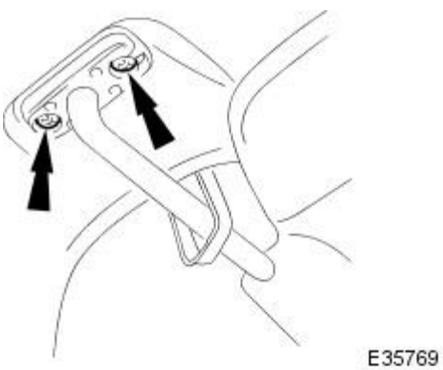

3. Slacken and remove the two visor securing screws and remove visor from vehicle.

Installation

1. Position sun visor at location and fit and tighten securing screws.
2. Fit visor base cover.
3. Pivot visor inwards, position in retention bezel and return to upward position.

Interior Trim and Ornamentation - Sun Visor Retaining Clip

Removal and Installation

Removal

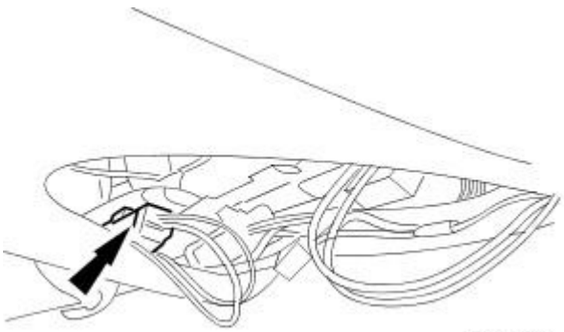

1. Remove battery cover and disconnect ground cable from battery terminal. Refer to 86.15.19.
2. Lower roof console, release bezel multiplug from retaining clip and disconnect multiplug from harness.

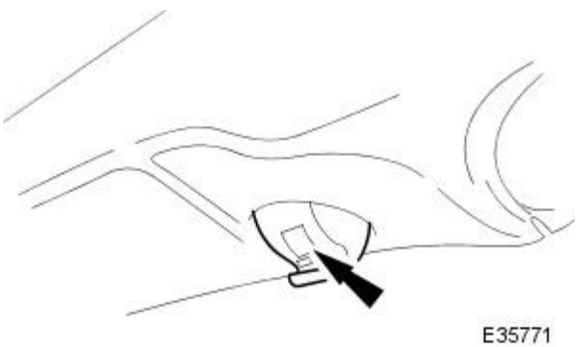

3. Turn sun visor downwards, release from retention bezel and pivot outwards.
4. Carefully open flap on retention bezel cover and slacken and remove bezel retaining screw.

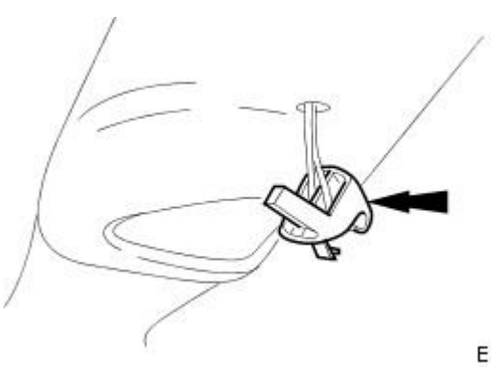

5. Withdraw bezel from location, carefully feeding multiplug through aperture and remove bezel from vehicle.

Installation

1. Position bezel for access and route multiplug through aperture to retaining clip.
2. Fully seat bezel and fit and tighten securing screw.
3. Close flap on securing screw cover.
4. Connect multiplug to harness and fit and fully seat multiplug on retaining clip.
5. Raise and fully seat roof console
6. Pivot sun visor inwards, locate in bezel and turn visor to upward position.
7. Connect ground cable to battery terminal and fit battery cover. Refer to 86.15.15.

Published: 11-May-2011

Interior Trim and Ornamentation - Door Window Control Switch Finish Panel

Removal and Installation

Removal

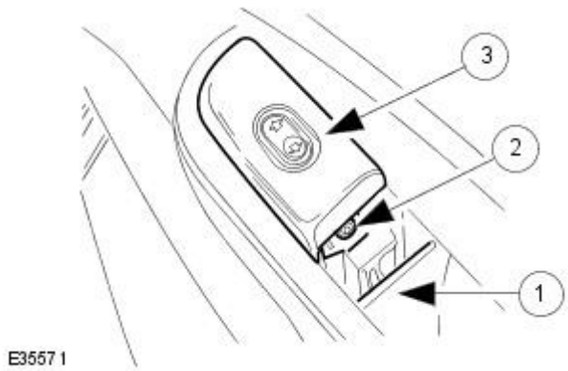

1. Remove battery cover and disconnect ground cable from battery terminal. Refer to 86.15.19
2. Remove glass lift switch.
    1. Remove glass lift switch end cover trim pad.
    2. Remove the switch securing screw.
3. Disconnect the switch harness multiplug.
4. Release veneer panel clips.

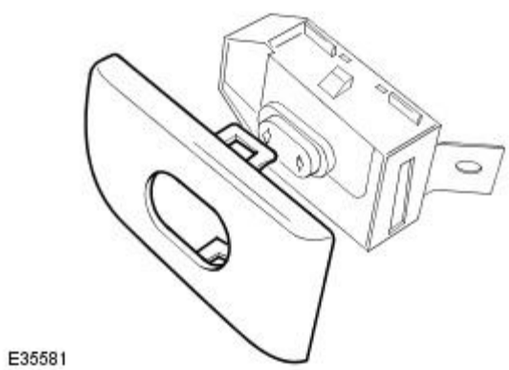

Installation

1. Install veneer panel on switch ensuring retaining clips are fully seated.
2. Connect harness multiplug to switch.
3. Install glass lift switch.
    1. Position glass lift switch in door.
    2. Install switch securing screw.
    3. Install and fully seat switch end cover trim pad.

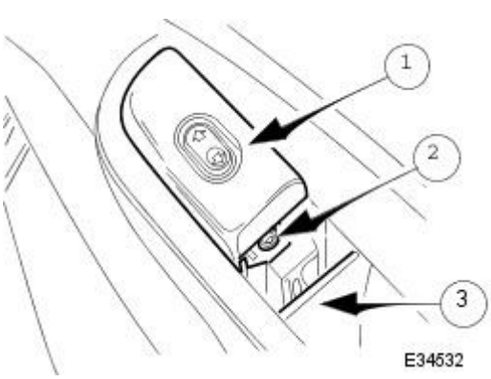

4. Connect ground cable to battery terminal and install battery cover. Refer to 86.15.15.

Exterior Trim and Ornamentation - Exterior Trim

Description and Operation

Air Intake, Splitter Vane and Front Body Trim

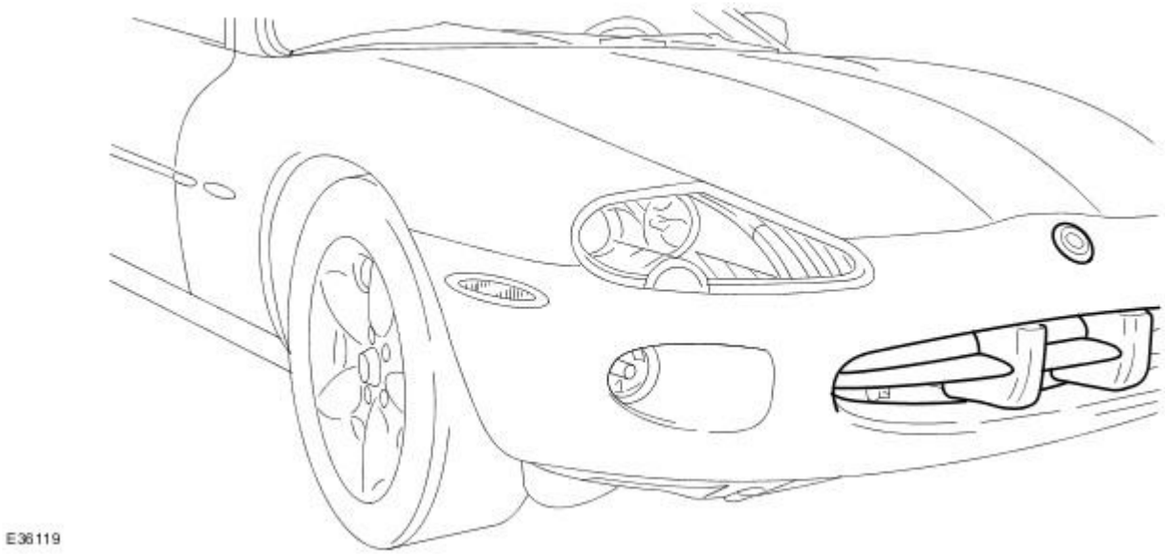

Body Front

A chrome splitter vane assembly is installed centrally in the bumper casing on normally aspirated vehicles, and a mesh grill is fitted to supercharged vehicles. The air intake incorporates polyurethane covers for the two bumper beam overriders. A Jaguar 'growler' badge is mounted centrally on the upper face of the front bumper casing.

Body Sides

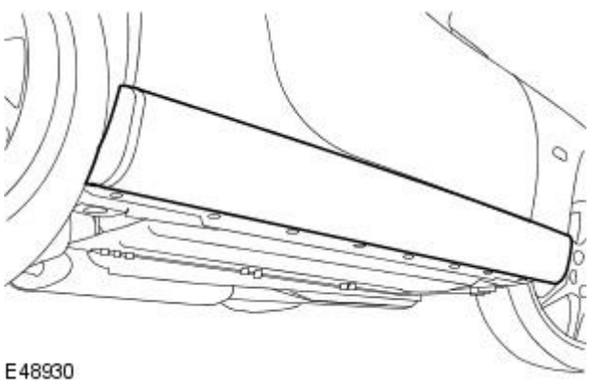

Rocker panel mouldings are fitted to the rocker panels to enhance the side view of the vehicle. For certain markets, a Jaguar 'leaper' badge is surface mounted on the rear of each fender in place of side repeater lamps. Chrome door handles are fitted for North American markets.

Body Rear

Rear External Trim

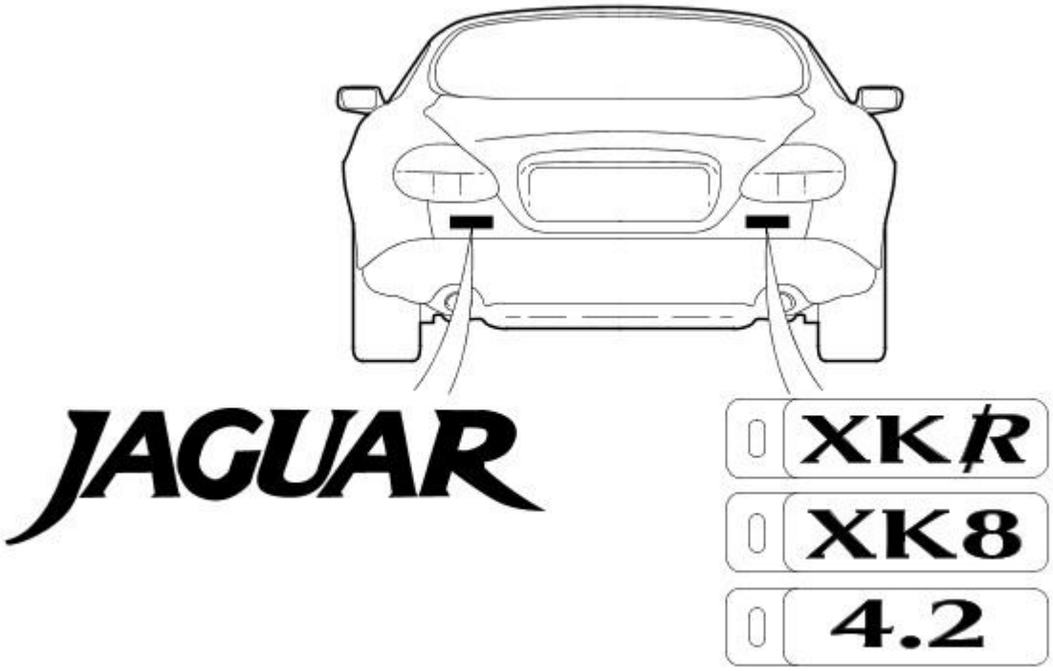

E48940

Two script badges are surface mounted on the luggage compartment rear panel. A 'Jaguar' badge is located on the left-hand side. An XKR, XK8 or 4.2 badge is located on the right-hand side. The right-hand side badge has the external luggage compartment lock key access.

Published: 11-May-2011

Exterior Trim and Ornamentation - Door Moulding

Removal and Installation

Removal

1. Apply suitable protective tape to immediately adjacent areas of paintwork.
2. Using a hand-held heat gun, appply heat uniformly along moulding length.
3. Applying local heat at one end and using a suitable thin lever to avoid damaging paintwork, progressively ease moulding away from door panel.
4. Discard moulding and remove protective tape.
5. Remove any residual adhesive and thoroughly clean area using white spirit.

Installation

1. NOTE: Optimum adhesion is achieved by warming body panel and moulding to 65deg C.

   Using white spirit ensure that mounting area is clean, dry and de-greased.
2. Remove protective backing tape from moulding.
3. NOTE: Do not allow moulding to contact the body panel until it is correctly aligned.

   Heat moulding and mounting area to 65deg C.
4. Aligning with adjacent fender moulding or to match opposite side of vehicle, press new moulding firmly onto body panel.
5. Apply hand pressure along moulding length to ensure satisfactory adhesion.
6. Allow moulding and door panel to cool , then thoroughly clean both using white spirit.
7. Apply a coat of suitable polish to moulding and body panel.

Exterior Trim and Ornamentation - Door Window Moulding

Removal and Installation

Removal

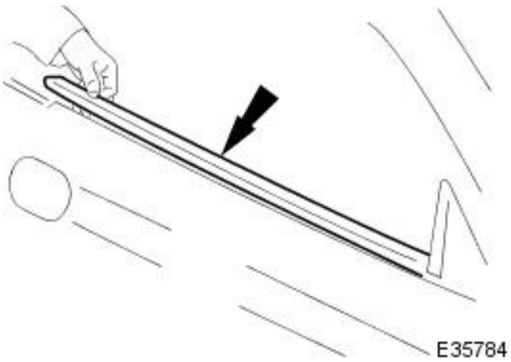

1. Remove door mirror. Refer to 76.10.52.
2. Exercising care to avoid damaging paintwork, lift and release waist rail moulding from door flange.

Installation

1. Fit and fully seat waist rail moulding on door flange.
2. Fit door mirror. Refer to 76.10.52.

Published: 11-May-2011

Exterior Trim and Ornamentation - Front Fender Moulding

Removal and Installation

Removal

1. Apply suitable protective tape to immediately adjacent areas of paintwork.
2. Using a hand-held heat gun, appply heat uniformly along moulding length.
3. Applying local heat at one end and using a suitable thin lever to avoid damaging paintwork, progressively ease moulding away from fender.
4. Discard moulding and remove protective tape.
5. Remove any residual adhesive and thoroughly clean area using white spirit.

Installation

1. NOTE: Optimum adhesion is achieved by warming body panel and moulding to 65deg C.

   Using white spirit ensure that mounting area is clean, dry and de-greased.
2. Remove protective backing tape from moulding.
3. NOTE: Do not allow moulding to contact the fender until it is correctly aligned.

   Heat moulding and mounting area to 65deg C.
4. Aligning with adjacent door moulding or to match opposite side of vehicle, press new moulding firmly onto fender.
5. Apply hand pressure along moulding length to ensure satisfactory adhesion.
6. Allow moulding and fender to cool , then thoroughly clean both using white spirit.
7. Apply a coat of suitable polish to moulding and fender.

Exterior Trim and Ornamentation - Hood Grille

Removal and Installation

Removal

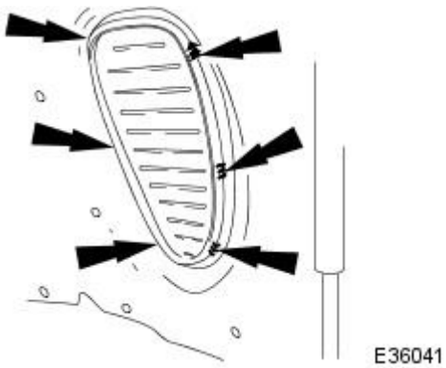

1. Open hood.
2. Fit fender covers.
3. Remove louvre from hood.
   - From hood underside, release the six louvre securing tangs.
   - Carefully withdraw louvre from hood upper surface.

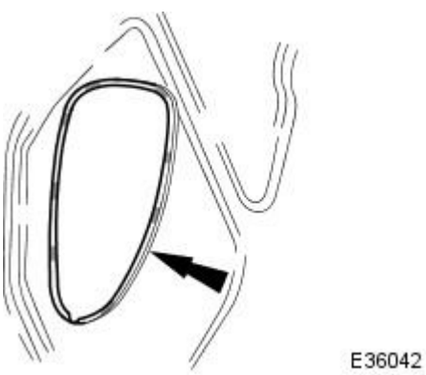

4. Clean hood mating surface.
   - Remove any residual foam strip.
   - Using a suitable cleaning agent, remove any adhesive.

Installation

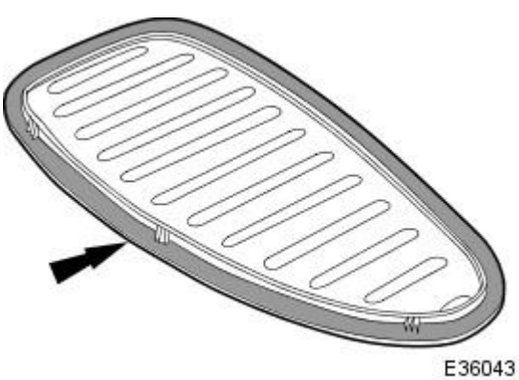

1. Install new foam strip on louvre.
   - Remove paper backing from foam strip.
   - Ensuring correct alignment, fully seat foam on louvre.

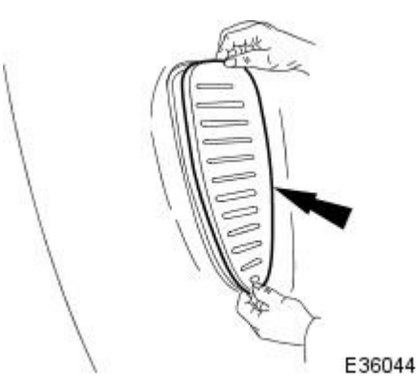

2. Install louvre on hood.
   - Carefully position louvre on hood aperture.
   - Using a clean soft cloth, firmly press louvre into position.

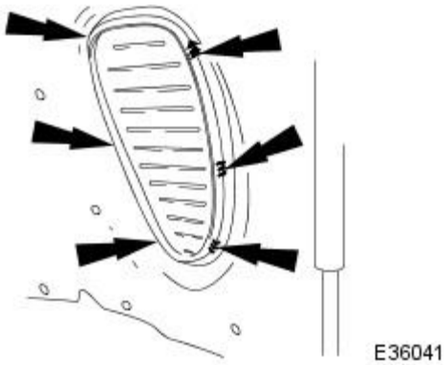

3. From hood underside, check that all louvre tangs are fully seated.

4. Remove fender covers.

5. Close hood.

Published: 11-May-2011

Exterior Trim and Ornamentation - License Plate Housing

Removal and Installation

Removal

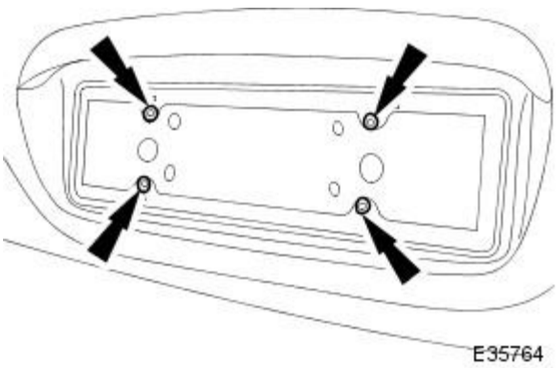

1. Remove covers from number plate securing screws.
2. Slacken and remove number plate securing screws and remove number plate.
3. Drill out pop rivets securing number plate trim surround to trunk lid.

Installation

1. Position trim surround on trunk lid and secure with new pop rivets.
2. Align number plate with trunk lid and fit and tighten securing screws.

Exterior Trim and Ornamentation - Luggage Compartment Lid Moulding

Removal and Installation

Removal

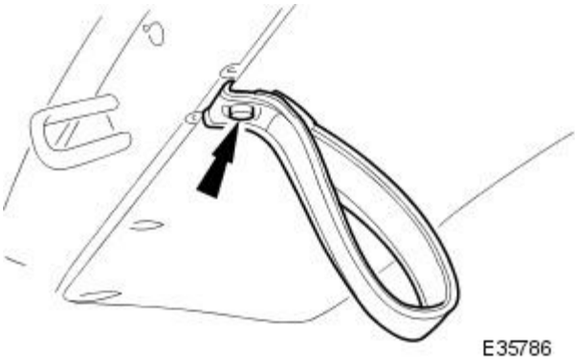

1. Slacken and remove trunk stowage strap securing screw and remove strap.

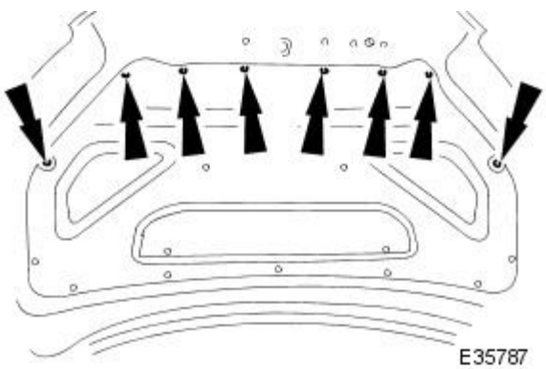

2. Release eight fasteners securing the insulating pad to rear of the trunk lid and position pad for access.

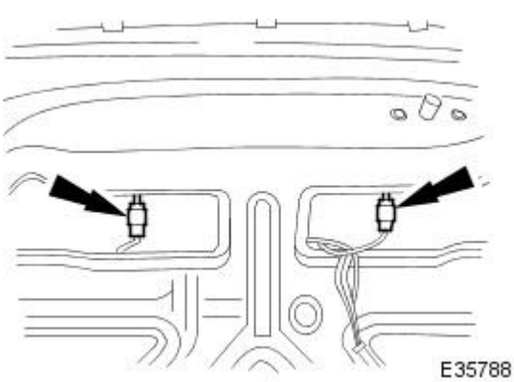

3. Disconnect number plate lamp harness multiplugs.

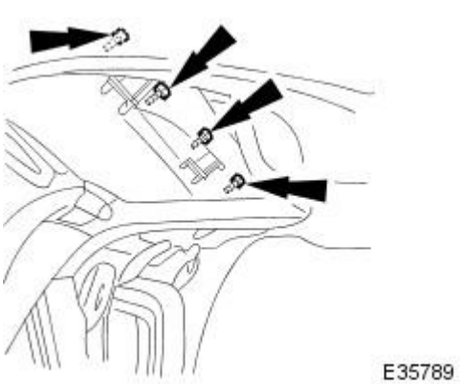

4. Slacken and remove the four trim finisher/number plate lamp assembly securing nuts and remove assembly from trunk lid.

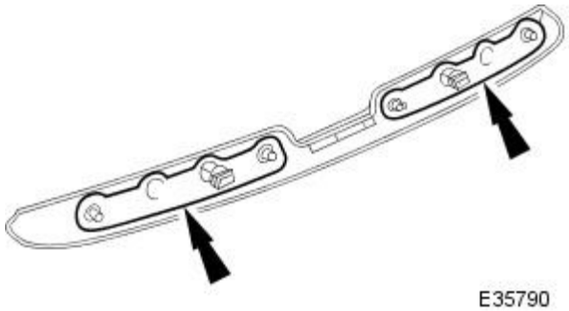

5. Remove lenses and bulb holders and discard gaskets from number plate lamps.

Installation

1. Fit new gaskets to number plate lamps
2. Fit and fully seat bulb holders and lenses to number plate lamps.
3. Position trim finisher/number plate lamp assembly on trunk lid and fit and tighten the securing nuts.
4. Connect number plate lamp harness multiplugs.
5. Re-position insulation pad on trunk lid and fit and fully seat fasteners.
6. Position trunk stowage strap and fit and tighten securing screw.

Exterior Trim and Ornamentation - Radiator Grille

Removal and Installation

Removal

1. Remove battery cover and disconnect ground cable from battery terminal. Refer to 86.15.19.
2. Raise front of vehicle and support on stands. Refer to Section 100-02.
3. Remove road wheels. Refer to Section 100-02.
4. Remove wheel arch liners for access. Refer to 76.10.90.
5. Using a thin plastic lever, carefully release front number plate from plinth.
6. Remove screws securing number plate plinth to overriders.
7. Remove and discard rivets securing undertray to the bumper cover.

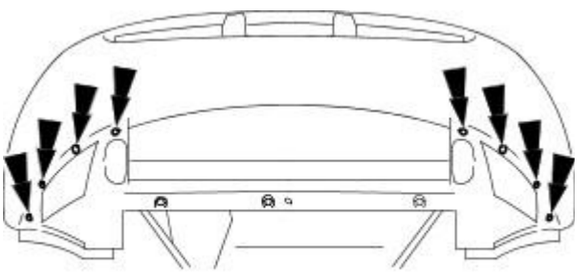

E33497

8. Remove three screws securing undertray to lower cross-member and remove undertray.

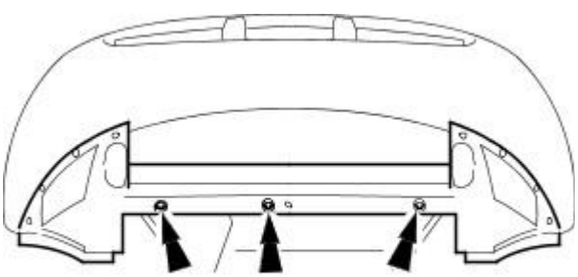

E33498

9. At each side of vehicle:
   - Disconnect fog lamp harness multiplug and where fitted, disconnect sidemarker lamp.
   - Remove three bolts securing bumper cover to to fender lower flange.

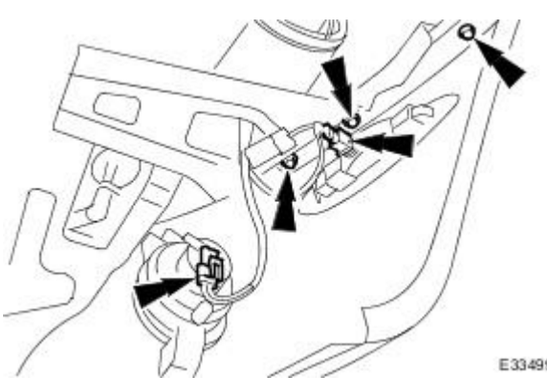

E33499

10. Raise vehicle, remove stands and lower 4-post ramp.
11. Remove bumper cover from vehicle.
    - Remove and discard the three fir tree fasteners securing bumper cover to body front upper cross-member.
    - Remove six bolts securing bumper cover to front upper cross-member and remove cover from vehicle.

E33500

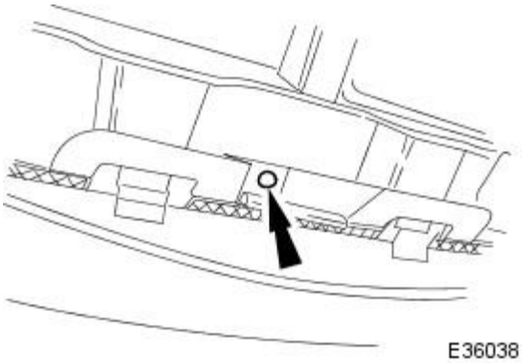

12. Remove and discard fastener securing bottom of radiator grill to bumper beam.

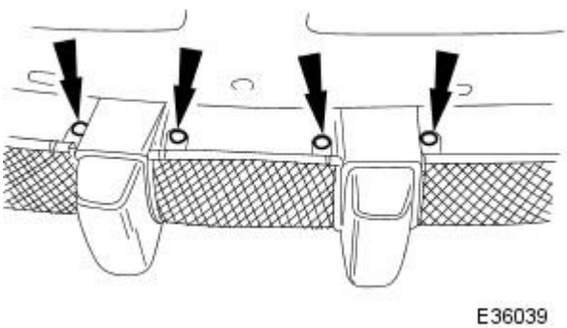

13. Remove and discard fasteners securing top of radiator grill to bumper beam.

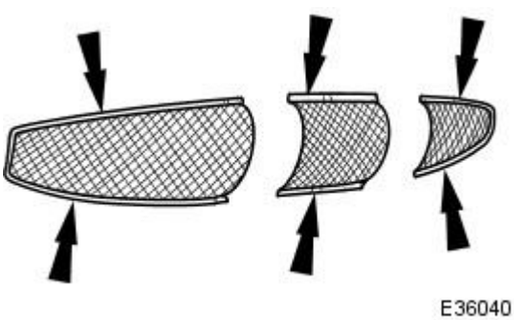

14. Remove grill surround strips.

- Withdraw radiator grill.
- Sever and discard tie straps.
- Remove surround strips.

Installation

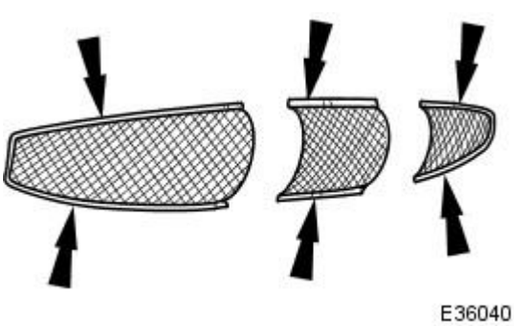

1. Install surround strips on grill and secure with new tie straps.

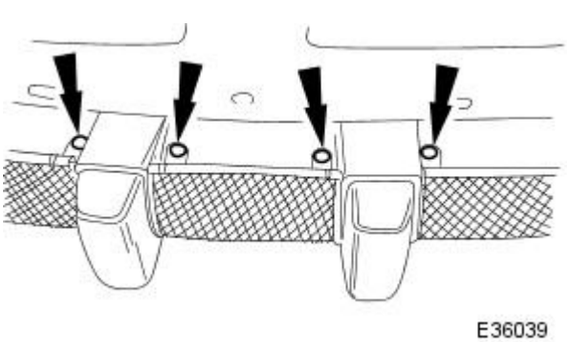

2. Position grill on bumper beam and secure top with new fasteners.

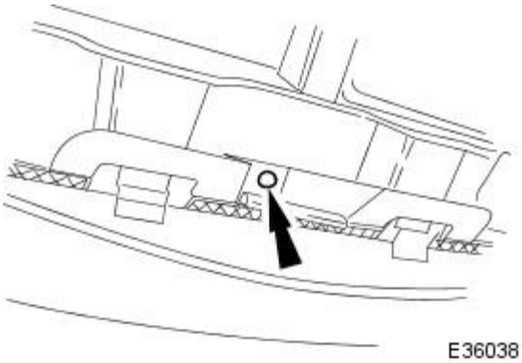

3. Secure bottom of grill with new fastener.

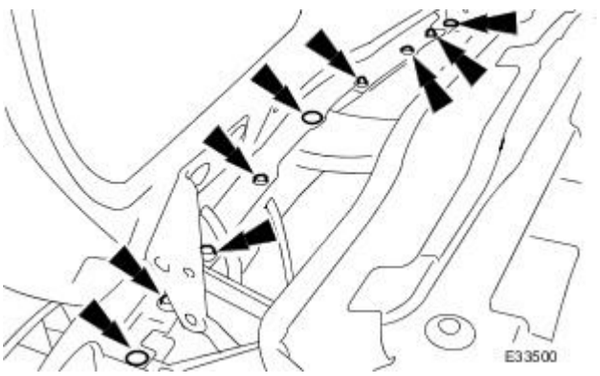

4. Position and secure bumper cover to front upper cross-member.

- Position bumper cover over bumper beam and secure on upper cross-member using three new fir tree fasteners.
- Install six cover to upper cross-member securing bolts.

5. Raise vehicle and support on stands. Refer to Section 100-02.

6. At each side of vehicle:

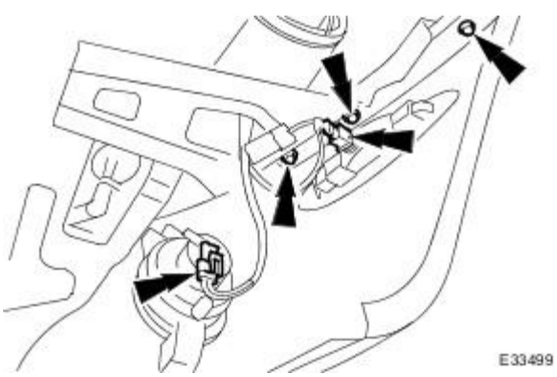

- Install three bolts securing bumper cover to fender lower flange.
- Connect harness multiplugs to fog lamps and where fitted, side marker lamps.

7. Install undertray.

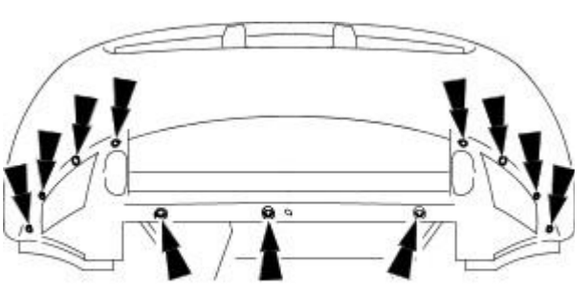

- Position undertray on vehicle and secure to lower cross-member with three screws.
- Secure undertray to bumper cover using new rivets.

8. Using new fasteners, install wheel arch liner. Refer to 76.10.90.

- Repeat procedure on opposite side of vehicle.

9. Install road wheels. Refer to Section 100-02.

10. Raise vehicle, remove stands and lower vehicle onto wheels. Refer to Section 100-02.

11. Position front number plate plinth on overriders, fit and tighten securing screws and fit number plate to plinth.

12. Connect ground cable to battery terminal and fit battery cover. Refer to 86.15.15.

Exterior Trim and Ornamentation - Rear Quarter Window Moulding

Removal and Installation

Removal

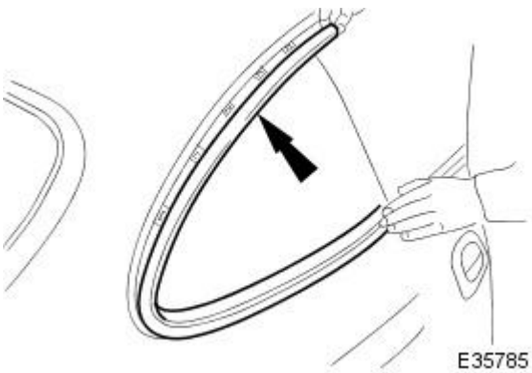

1. Remove door aperture seal for access. Refer to 76.40.30.
2. Remove gutter finisher. Refer to 76.43.11.
3. Exercising care to avoid damaging paintwork, release quarter light finisher from edge securing clips.

Installation

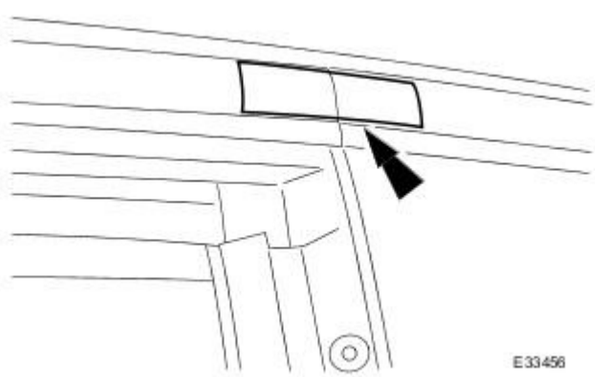

1. Position quarter light finisher on BIW and press firmly to fully seat in securing clips.
2. Apply wet sealant behind finisher butt joint between the two adjacent screw locations.
3. Fit gutter finisher. Refer to 76.43.11.
4. Fit door aperture seal. Refer to 76.40.30.

Exterior Trim and Ornamentation - Rear Window Moulding2-Door

Removal and Installation

Removal

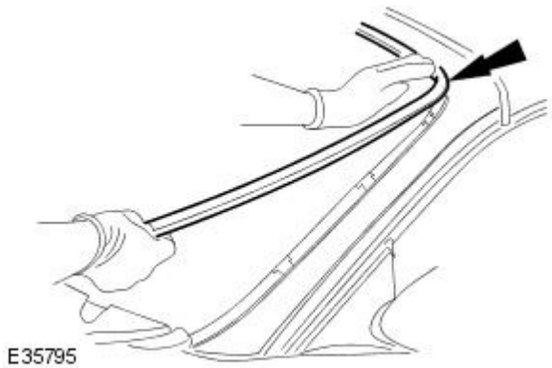

1. Using masking tape, mark finisher centre points on BIW.
2. Carefully release backlight finishers from retaining clips.
3. Clean mating surface of backlight.
4. If original finisher is to be re-fitted, clean mating surface.

Installation

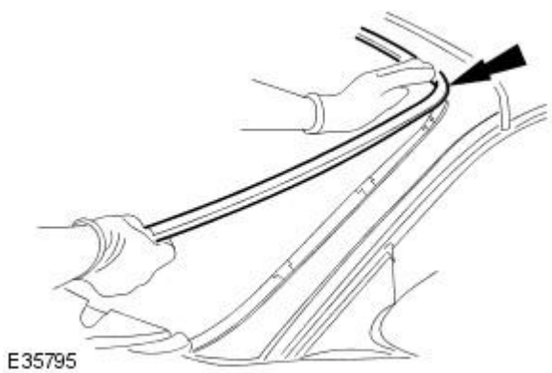

1. Aligning centre points with masking tape markers, position finisher on backlight and press firmly to fully seat on retaining clips.

Exterior Trim and Ornamentation - Rocker Panel Moulding

Removal and Installation

Removal

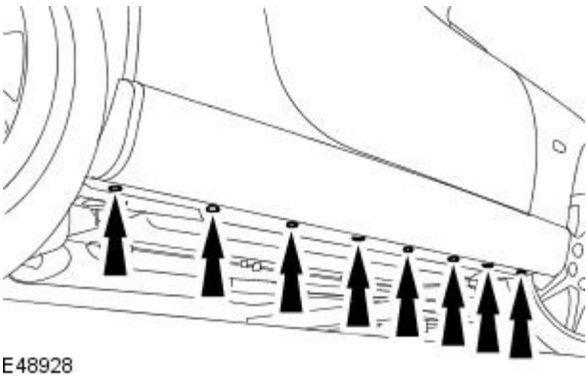

E48928

1. NOTE: Right-hand shown, left-hand similar.

Remove the rocker panel moulding lower retaining clips.

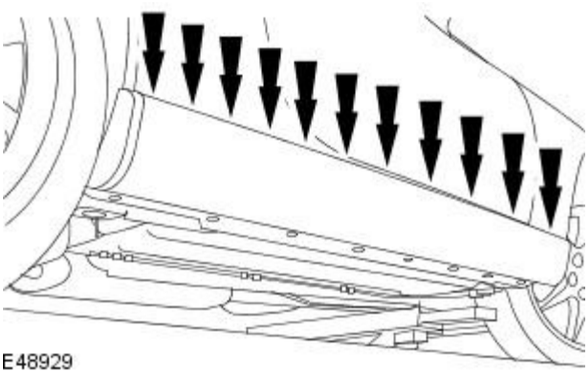

E48929

2. NOTE: Right-hand shown, left-hand similar.

Remove the rocker panel moulding.

Installation

1. To install, reverse the removal procedure.

Exterior Trim and Ornamentation - Roof Moulding2-Door

Removal and Installation

Removal

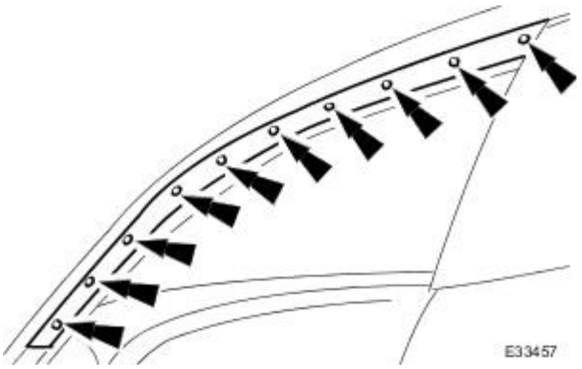

1. Remove door aperture seal for access. Refer to 76.40.30.
2. Slacken and remove the ten screws securing gutter finisher to BIW.
3. Carefully release gutter finisher from rear quarter light finisher and remove gutter finisher.

Installation

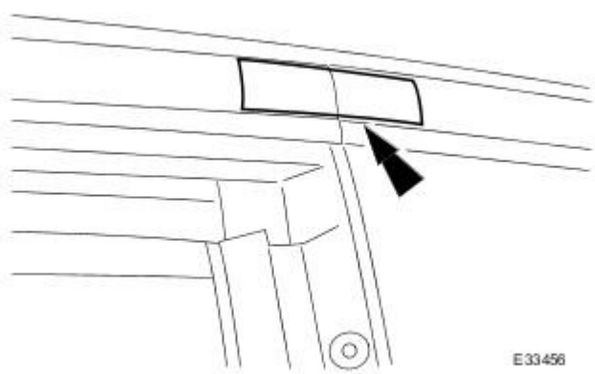

1. Position gutter finisher on BIW aligning it with rear quarter light finisher.
2. Apply wet sealant behind finisher butt joint between the two adjacent screw locations.

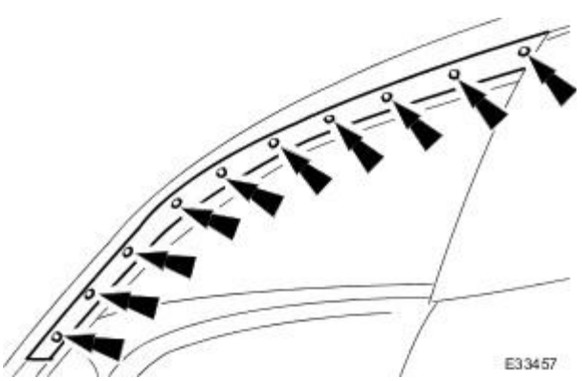

3. Fit and tighten the ten finisher to BIW securing screws.
4. Fit door aperture seal. Refer to 76.40.30.

Published: 11-May-2011

Rear View Mirrors -

Torque Specifications

Description	Nm	lb-ft	lb-in
Exterior mirror retaining bolts	8	—	53
Exterior mirror motor retaining screws	1	—	9

Published: 11-May-2011

Rear View Mirrors - Rear View Mirrors

Description and Operation

Interior Rear View Mirror

The interior rear is an electrochromic unit that automatically darkens to prevent glare from following vehicle lights. It is equipped with a reflecting surface light sensor to enable this feature. During daytime driving, the ambient light sensor will detect high ambient light levels and control the electrochromic rear view mirrors to provide a full, clear reflection. During night driving, the ambient light sensor will detect low ambient light levels and automatic glare reduction will occur. This automatic function is selected by pressing the switch at the bottom of the interior rear view mirror. An LED illuminates when automatic dipping is operative. Pressing the switch again cancels this function.

If equipped the interior rear view mirror also incorporates electronic an compass. The electronic compass function is selected by pressing the switch at the bottom of the interior mirror. The electronic compass must be calibrated to the correct world zone area to function correctly.

Exterior Mirrors

The exterior mirrors are cheater mounted, color-keyed units, remote electrically adjustable and heated. Adjustment of both mirrors is carried out from the driver door window control switch. A rocker switch selects the mirror to be adjusted, and a toggle switch adjusts the selected mirror to the required position.

Mirror adjustment can only be made when the ignition switch is in position **I** or **II** or the driver's door is open, and the rocker switch is moved from the central position.

If equipped, electrochromic exterior mirrors automatically darken under control of the interior mirror. Mirror heating elements operate on selection of rear window heating.

If equipped, power fold back mirrors can be operated by the exterior mirror fold back switch incorporated in the window control switch. The power fold back mirrors only operate when the mirror select switch is in the middle position, and the vehicle speed is below 19 km/h (12 mile/h).

Published: 11-May-2011

Rear View Mirrors - Rear View Mirrors

Diagnosis and Testing

1. **1.** Verify the customer concern.
2. **2.** Visually inspect for obvious signs of mechanical or electrical damage.

Visual Inspection Chart

Mechanical	Electrical
• Exterior mirror(s)	• Fuse(s) • Relay • Electrical connector(s) • Switch

3. **3.** If an obvious cause for an observed or reported concern is found, correct the cause (if possible) before proceeding to the next step.
4. **4.** If the cause is not visually evident, verify the symptom and refer to the Jaguar Approved Diagnostic System.

Rear View Mirrors - Auto-Dimming Interior Mirror

Removal and Installation

Removal

All vehicles

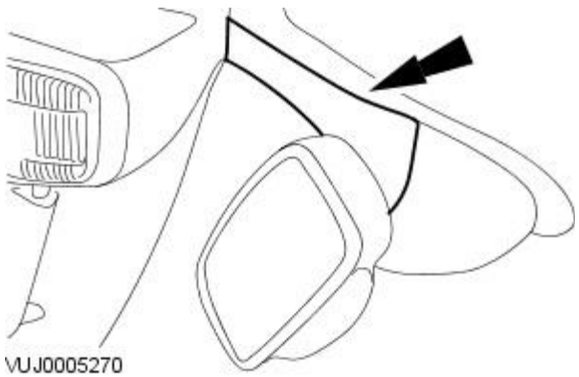

1. Remove the auto-dimming interior mirror trim panel.

Vehicles with electronic compass

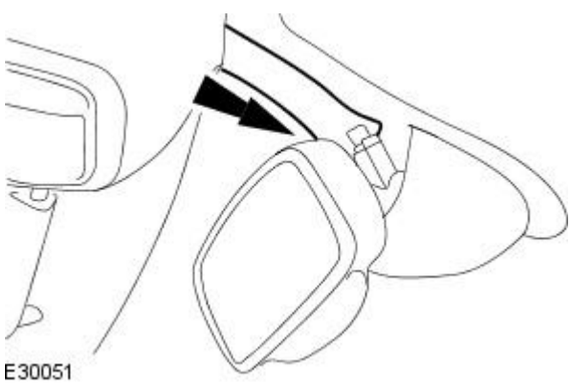

2. Disconnect the electronic compass electrical connector.

All vehicles

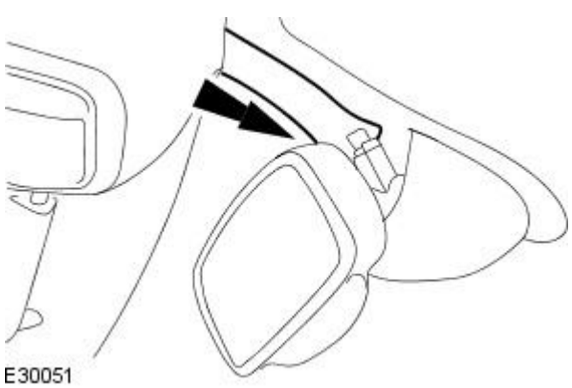

3. Disconnect the auto-dimming interior mirror electrical connector.

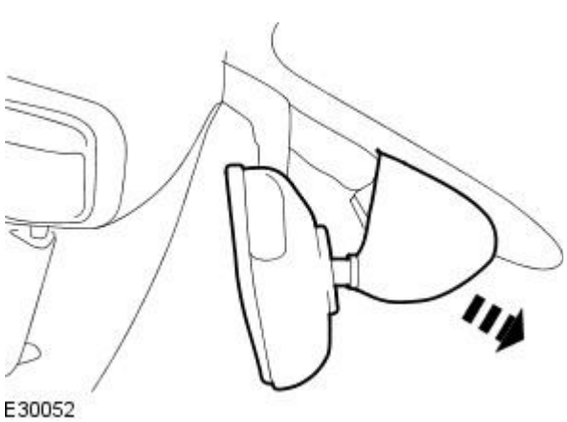

4. Remove the auto-dimming interior mirror.

Installation

1. To install, reverse the removal procedure.

Rear View Mirrors - Exterior Mirror

Removal and Installation

Removal

1. Remove the door trim panel.
   For additional information, refer to Section 501-05 Interior Trim and Ornamentation.
2. Detach the door tweeter speaker.

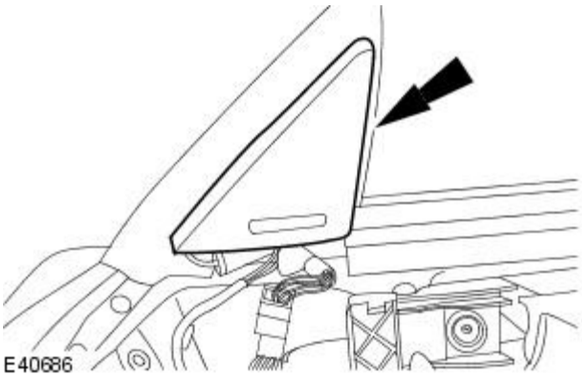

3. Disconnect the front door tweeter speaker electrical connector.

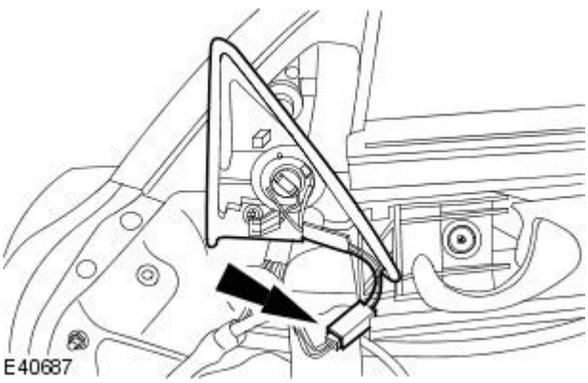

4. Disconnect the exterior mirror electrical connector.

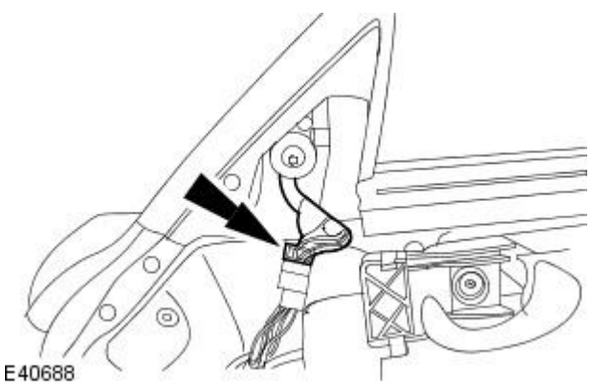

5. NOTE: Support the exterior mirror while removing the retaining bolt.

   Remove the exterior mirror.

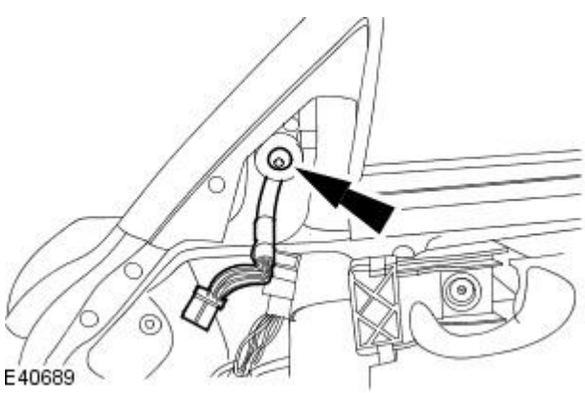

Installation

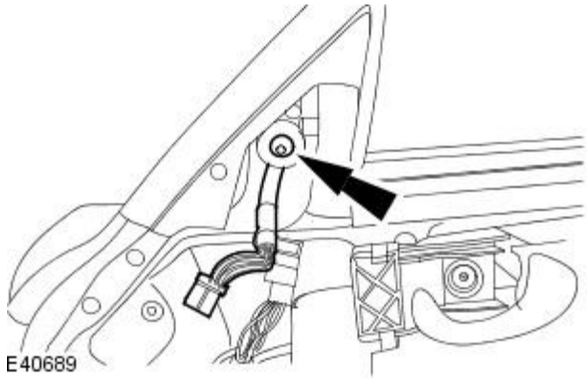

1. To install, reverse the removal procedure.

- Tighten to 8 Nm.

Rear View Mirrors - Exterior Mirror Cover

Removal and Installation

Removal

1. Remove the exterior mirror glass.
   For additional information, refer to Exterior Mirrror Glass in this section.
2. Detach the inner edge of the exterior mirror cover.

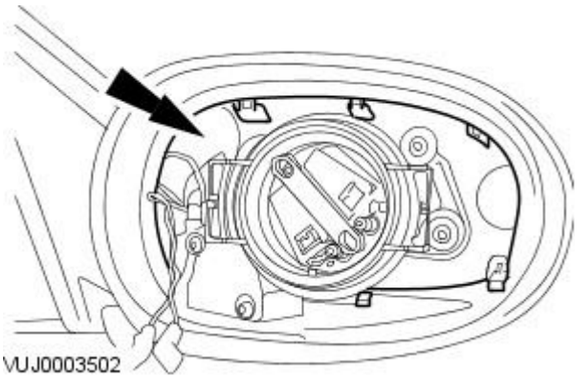

3. Detach the outer edge of the exterior mirror cover.

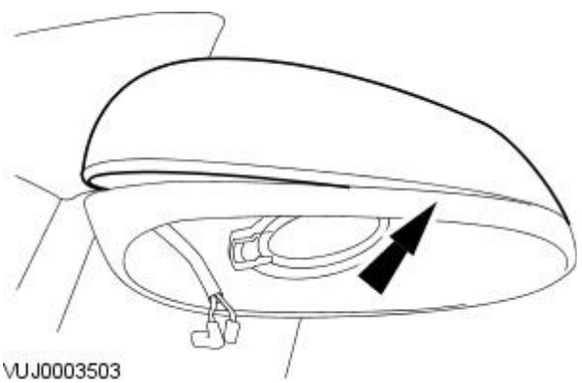

4. Remove the exterior mirror cover.

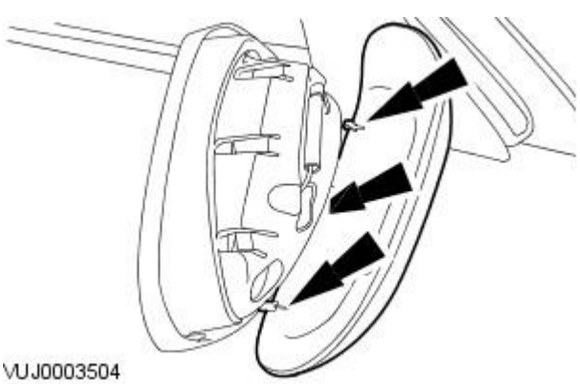

Installation

1. To install, reverse the removal procedure.

Rear View Mirrors - Exterior Mirror Glass

Removal and Installation

Removal

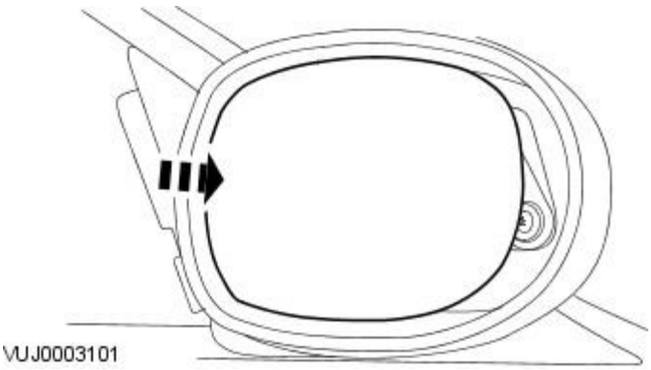

1. Apply light pressure to the exterior mirror glass.

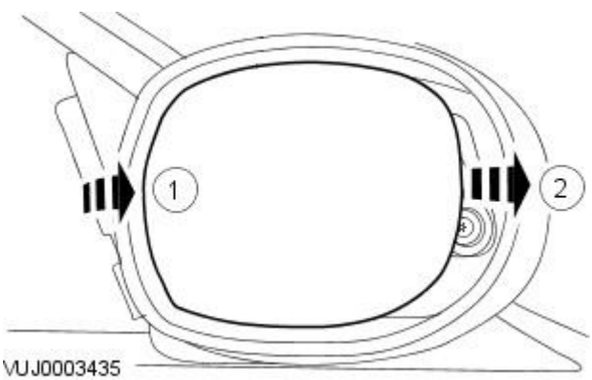

2. Detach the mirror glass.

1. Apply light pressure to the inner edge of the mirror glass.
2. Pull the outer edge of the mirror glass to detach the mirror glass.

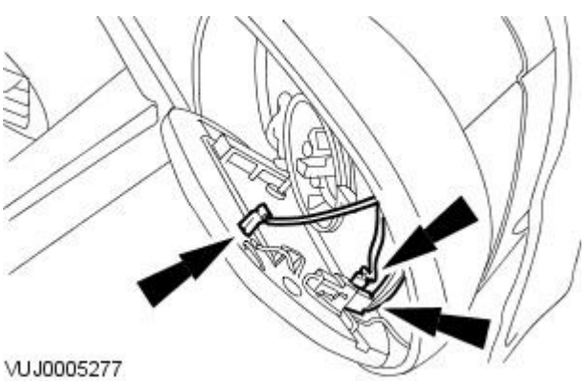

3. Remove the exterior mirror glass.

- Disconnect the electrical connectors.

Installation

1. To install, reverse the removal procedure.

Rear View Mirrors - Exterior Mirror Motor

Removal and Installation

Removal

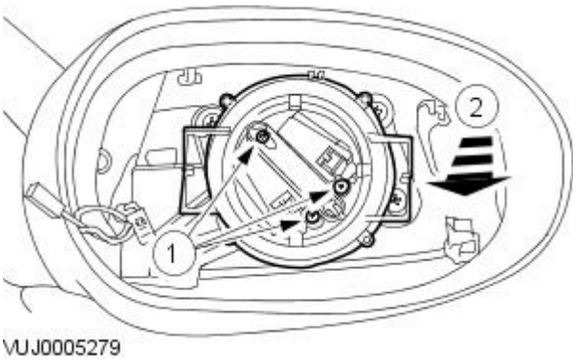

VUJ0005279

1. Remove the exterior mirror glass.
   For additional information, refer to Exterior Mirrror Glass in this section.
2. Detach the exterior mirror motor.
   1. Remove the exterior mirror motor retaining screws.
   2. Detach the exterior mirror motor.

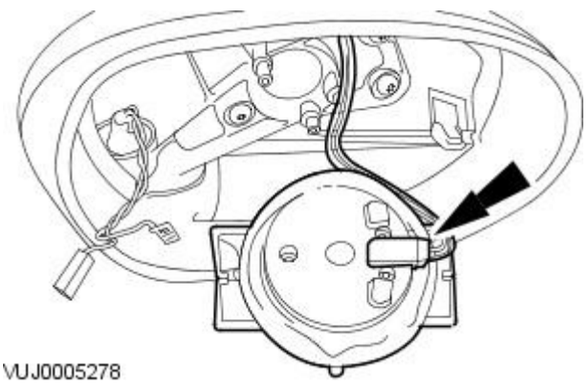

VUJ0005278

3. Remove the exterior mirror motor.
   - Disconnect the electrical connector.

Installation

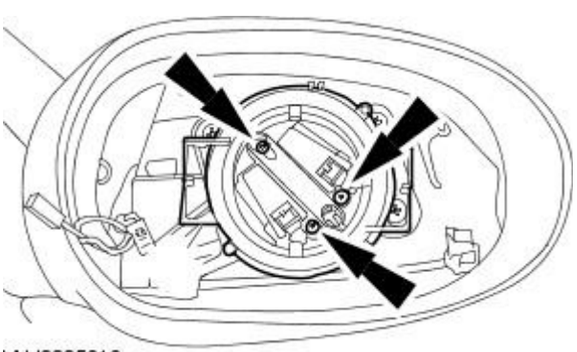

VUJ0005616

1. To install, reverse the removal procedure.
   - Tighten to 1 Nm.

Seating -

Torque Specifications

Description	Nm	lb-ft	lb-in
Front seat cushion retaining nuts	25	18	-
Front seat recliner motor retaining bolt	8	-	71
Front seat retaining bolts	25	18	-
Front seat control module retaining nuts	7	-	62
Front seat control module bracket retaining nuts	4	-	35
Front seat head restraint control module retaining nuts	7	-	62

Seating - Seats

Description and Operation

Front Seats

Front Seat - Vehicles Without: Recaro Seats

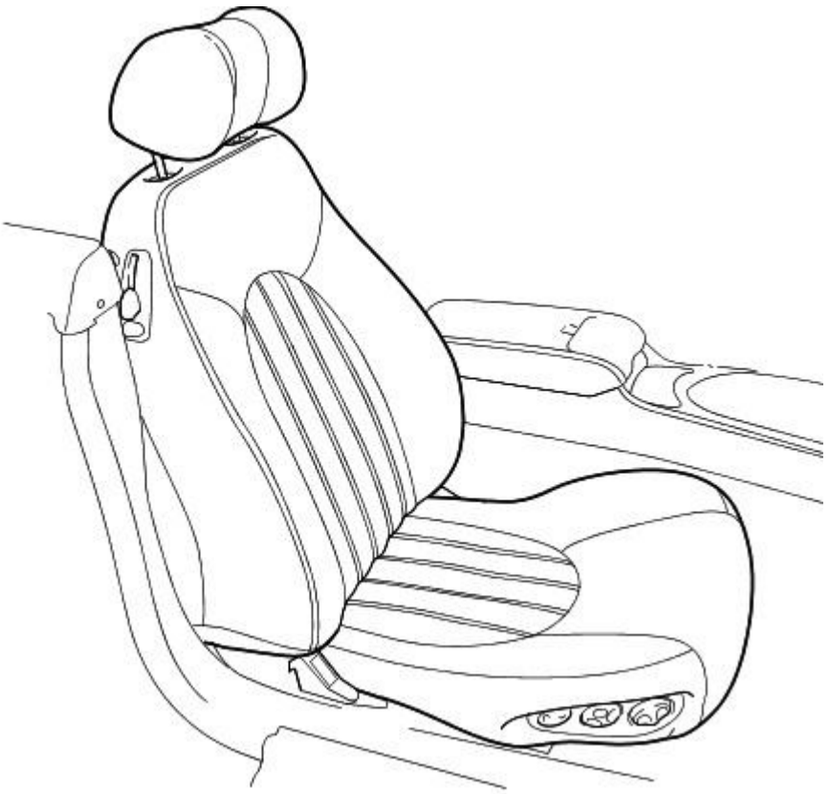

E33654

Front Seat - Vehicles With: Recaro Seats

E41746

The front seat frames are common to both the coupe and convertible and are equipped with the following:

- Seat control switch
- Front seat cushion front height adjustment
- Front seat cushion rear height adjustment
- Front seat backrest adjustment
- Front seat head restraint adjustment - vehicles without sport seats
- Lumbar adjustment
- Front seat forward and backward adjustment

- Side air bag module
- Front seat backrest heating
- Front seat cushion heating

WARNING: Prior to removal of the front seats and before disconnecting the front seat wiring harness electrical connectors (which includes the side air bag module electrical connectors), the battery ground cable should be disconnected and a period of at least one minute allowed to elapse. The same amount of care should be taken when handling and storing the front seats, as would be taken when handling and storing air bag modules.

The driver and passenger front seats, although almost identical, have some unique components. The front driver seat has a seat position sensor and the front passenger seat has a weight sensing system. In both instances the components form an integral part of the air bag supplemental restraint system (SRS). For additional information, refer to Section 501-20A Safety Belt System / 501-20B Supplemental Restraint System.

Seat Control Switch

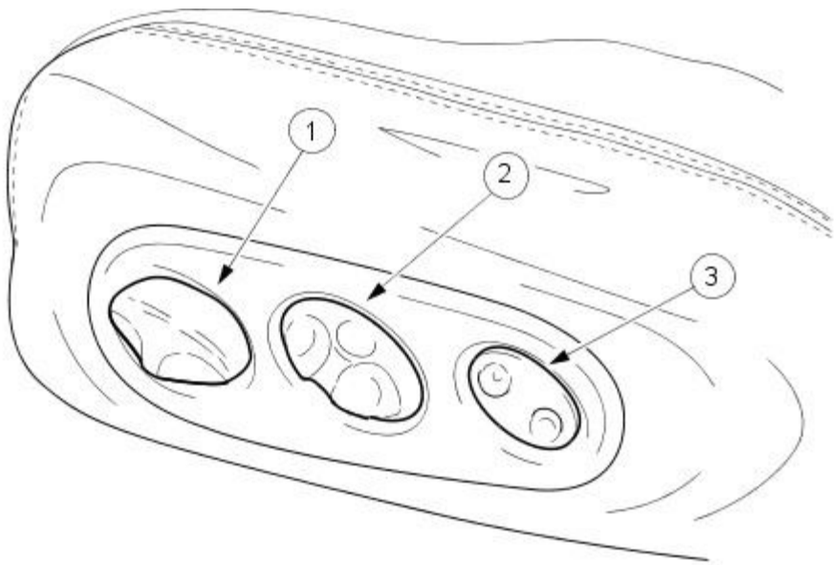

E 33655

Item	Part Number	Description
1	—	Front seat forward and backward adjustment, front seat cushion front height adjustment and front seat cushion rear height adjustment
2	—	Front seat backrest adjustment and front seat head restraint adjustment
3	—	Front seat lumbar adjustment

The front seat control switches are installed in the outboard side of both the driver and passenger front seats.

Driver Seat Underside

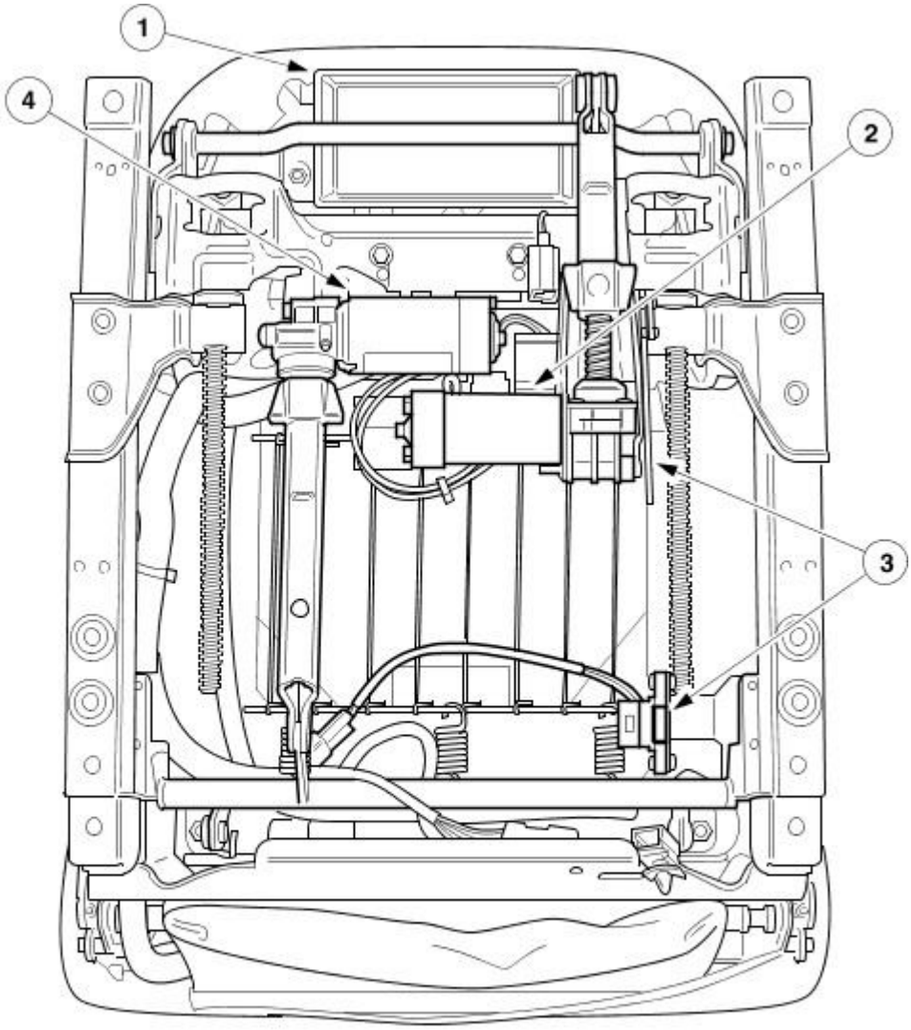

E33656

Item	Part Number	Description
1	—	Driver seat module (DSM)
2	—	Front seat cushion front height adjustment motor
3	—	Seat track position sensor
4	—	Front seat cushion rear height adjustment motor

Passenger Seat Underside

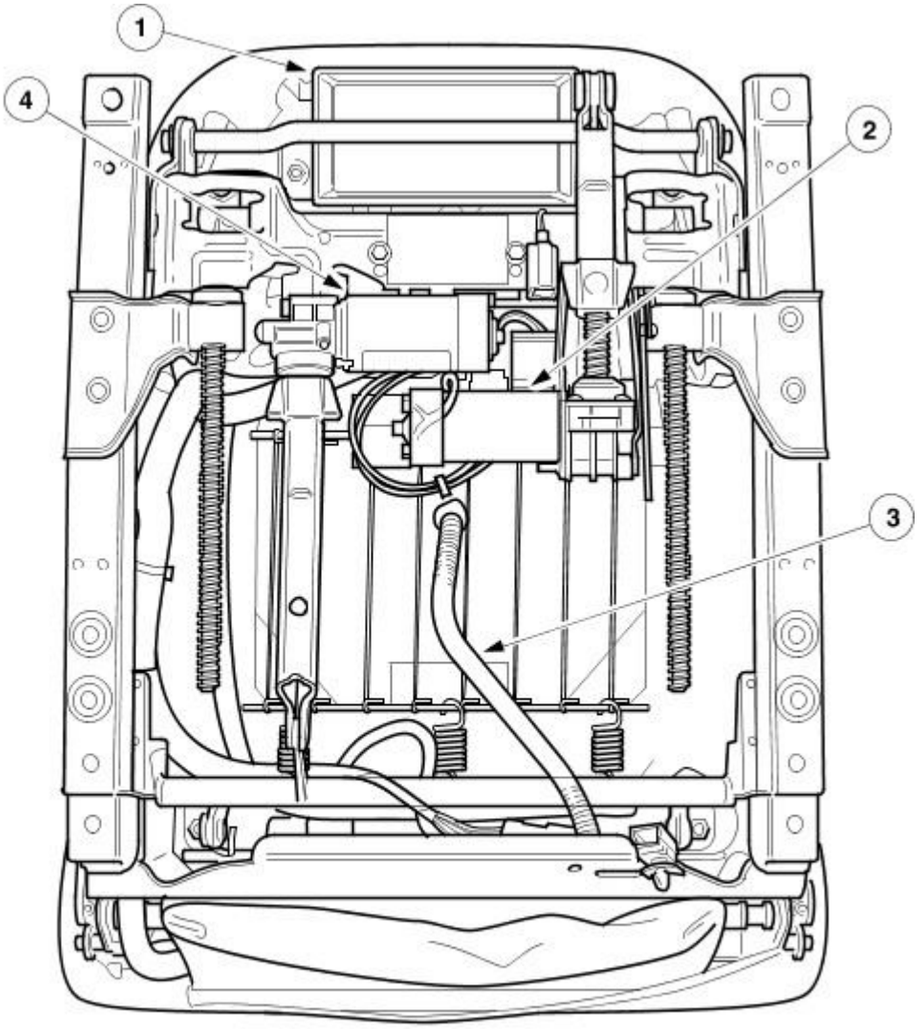

E33657

Item	Part Number	Description
1	—	Passenger seat module (PSM)
2	—	Front seat cushion front height adjustment motor
3	—	Front passenger seat occupant classification sensor hose
4	—	Front seat cushion rear height adjustment motor

Front Seat Head Restraint - Vehicles Without: Recaro Seats

• NOTE: Left-hand seat backrest shown, right-hand seat backrest similar.

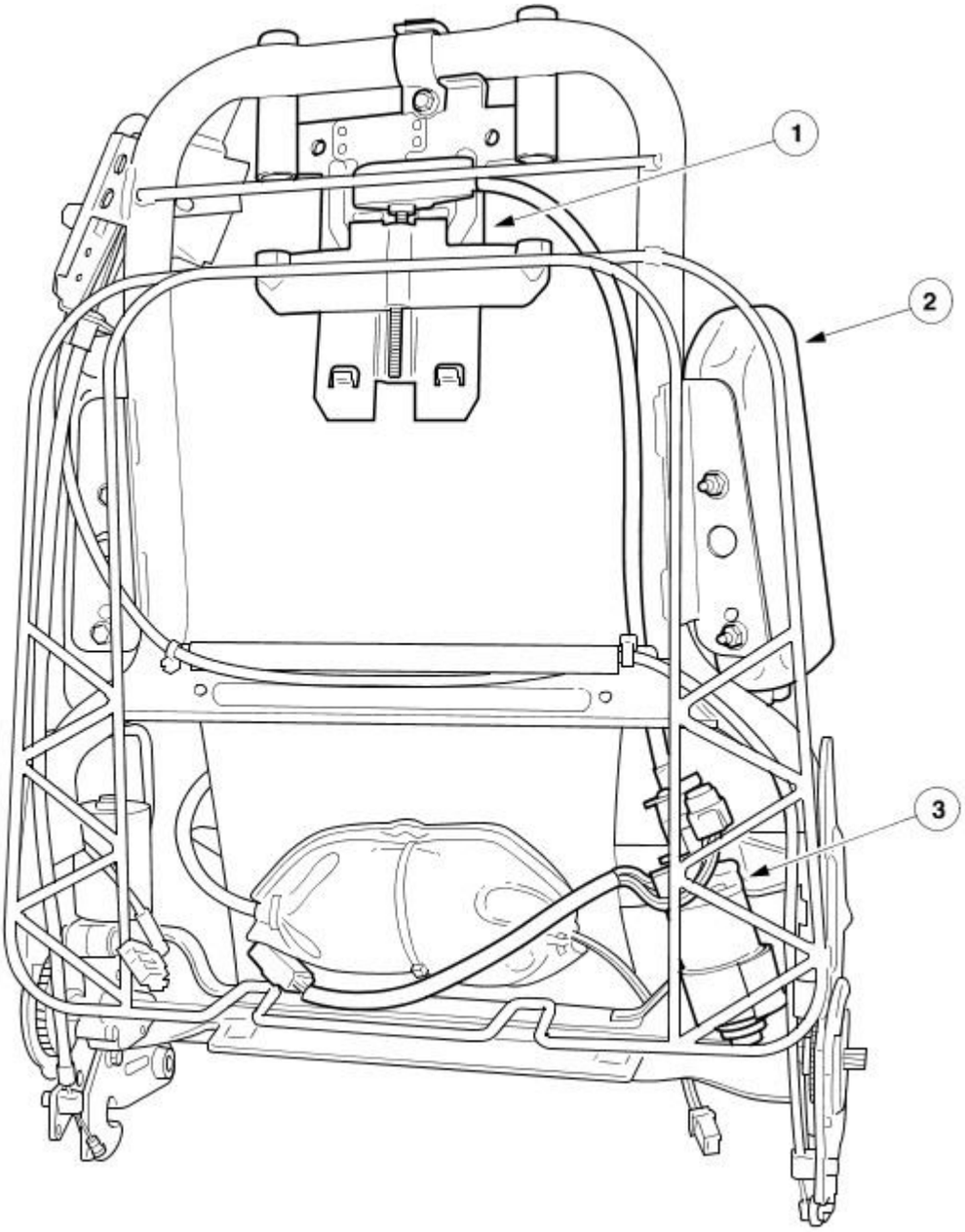

Item	Part Number	Description
1	—	Front seat head restraint mechanism
2	—	Front seat head restraint control module
3	—	Front seat head restraint motor

The front seat head restraint position is controlled by three components. The front seat head restraint control module, the front seat head restraint motor and the front seat head restraint control switch.

Seat Backrest Tilt Feature - Vehicles Without: Recaro Seats

• NOTE: The front seat head restraint will lower in the event that the seat backrest tilt microswitch fails. In this condition, the front seat head restraint will not work until the front seat is tilted forward, responding to the front seat latch microswitch changing state.

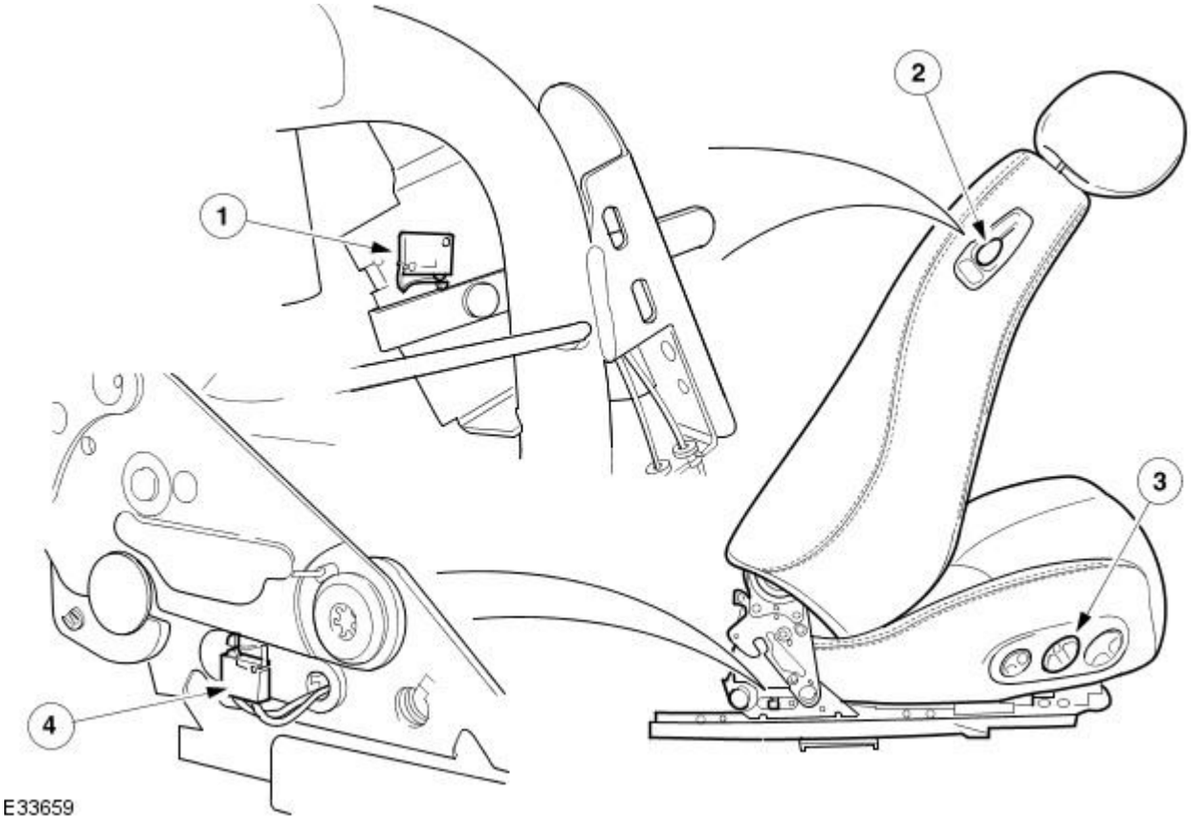

E33659

Item	Part Number	Description
1	—	Front seat backrest tilt microswitch
2	—	Front seat tilt knob
3	—	Front seat head restraint control switch
4	—	Front seat latch microswitch

The front seat head restraint control module controls the front seat head restraint motor by responding to the status of three seat control switches. The front seat backrest tilt microswitch, the front seat latch microswitch and the front seat head restraint switch.

The front seat head restraint automatically lowers when the front seat backrest is tilted forward. This feature is controlled by two microswitches. The front seat backrest tilt knob actuates the front seat backrest tilt microswitch causing the front seat head restraint to fully retract. When the front seat backrest is returned to the normal driving position, the front seat latch microswitch causes the front seat head restraint to return to its previous position. The vehicle occupant can position the front seat head restraint to suit their stature by pressing the front seat head restraint switch which is the center switch of the front seat control switch.

Rear Seats

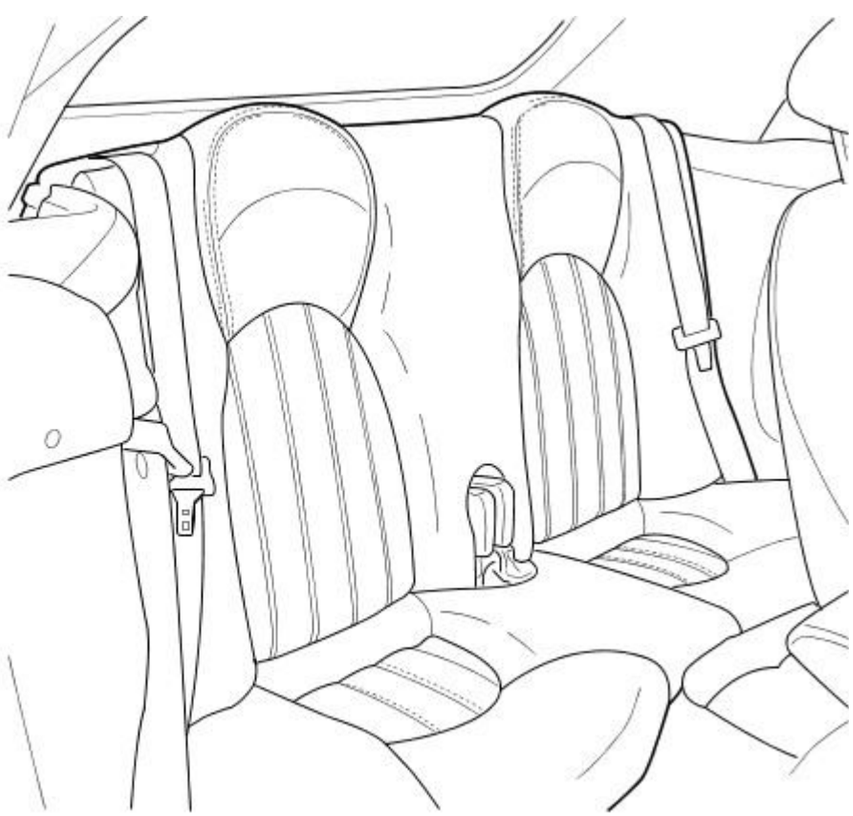

E33660

The rear seat frames are not common between the coupe and convertible. They are wire framed units trimmed to match the front seats. There is no provision for rear seat adjustment on either model.

Child seat lower International Standards Organization fix (ISOfix) anchors are fitted. For additional information, refer to Section 501-20A Safety Belt System / 501-20B Supplemental Restraint System.

Published: 11-May-2011

Seating - Seats

Diagnosis and Testing

With the increase in complexity of electronic modules and the multiplexed communication network, the general use of electrical test equipment is no longer practical. The approved Jaguar diagnostic equipment should be used in the diagnosis and testing of seat functions.

For detailed instructions on the diagnosis and testing of these functions, refer to the approved Jaguar diagnostic equipment user guide.

Seating - Front Seat

Removal and Installation

Removal

• WARNINGS:

BEFORE ANY AIR BAG/SRS SERVICE IS PERFORMED, AT LEAST ONE MINUTE MUST ELAPSE AFTER DISCONNECTION OF THE BATTERY POSITIVE CABLE TO ALLOW DISSIPATION OF BACK-UP POWER SUPPLY ENERGY.

IN THE EVENT OF A FAULT RUPTURING THE 10A BATTERY SUPPLY FUSE (F4 LOCATED IN THE FUSE BOX AT THE DRIVER END OF THE FASCIA) THE FUSE MUST NOT BE RENEWED UNTIL THE AIR BAG/SRS SYSTEM HAS BEEN DE-ACTIVATED. FUSES OF ANY OTHER VALUE MUST NEVER BE USED AS THIS CAN CAUSE DISARM FAILURE.

AFTER DEPLOYMENT, THE AIR BAG SURFACE CAN CONTAIN DEPOSITS OF SODIUM HYDROXIDE, A PRODUCT OF THE GAS GENERATED DURING COMBUSTION THAT IS IRRITATING TO THE SKIN. WASH YOUR HANDS WITH SOAP AND WATER AFTERWARDS. FAILURE TO FOLLOW THIS INSTRUCTION MAY RESULT IN PERSONAL INJURY.

NEVER PROBE THE CONNECTORS ON THE AIR BAG MODULE. DOING SO MAY RESULT IN AIR BAG DEPLOYMENT. FAILURE TO FOLLOW THIS INSTRUCTION MAY RESULT IN PERSONAL INJURY.

TO AVOID ACCIDENTAL DEPLOYMENT AND POSSIBLE PERSONAL INJURY, THE BACKUP POWER SUPPLY MUST BE DEPLETED BEFORE REPAIRING OR REPLACING ANY AIR BAG SUPPLEMENTAL RESTRAINT SYSTEM (SRS) COMPONENTS. TO DEPLETE THE BACKUP POWER SUPPLY ENERGY, DISCONNECT THE BATTERY GROUND CABLE AND WAIT ONE MINUTE. FAILURE TO FOLLOW THIS INSTRUCTION MAY RESULT IN PERSONAL INJURY.

1. Position the front seat fully rearwards.

2. Remove the front seat base trim panel.

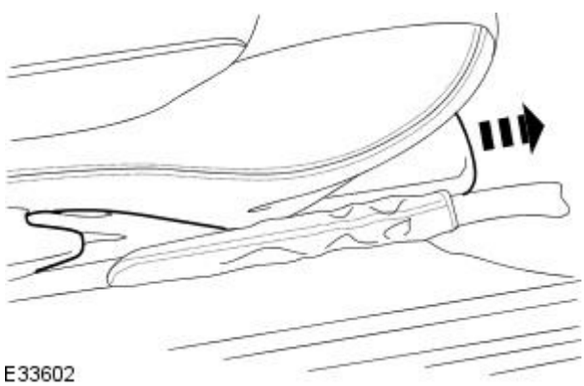

E33602

3. NOTE: Front seat right-hand front retaining bolt shown, front seat left-hand front retaining bolt similar.

Remove the front seat front retaining bolts.

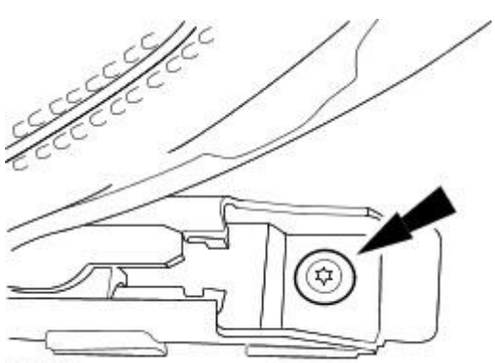

E33615

4. Position the front seat fully forwards.

5. Disconnect the battery ground cable.
For additional information, refer to Section 414-01 Battery, Mounting and Cables.

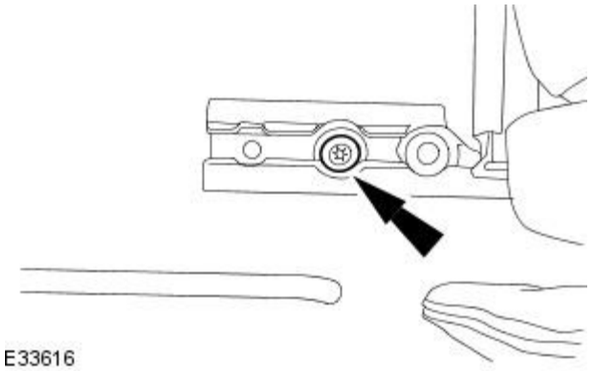

6. NOTE: Front seat right-hand rear retaining bolt shown, front seat left-hand rear retaining bolt similar.

Remove the front seat rear retaining bolts.

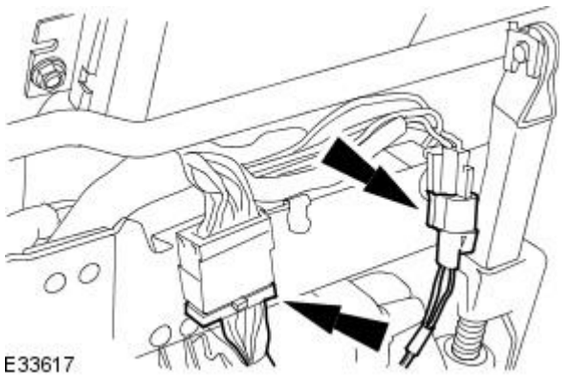

7. CAUTION: On removal of the front seat, make sure damage does not occur to the vehicle trim and paint work.

Remove the front seat.

- Disconnect the front seat base electrical connectors.

Installation

1. CAUTION: On installation of the front seat, make sure damage does not occur to the vehicle trim and paint work.

• NOTE: Do not install the front seat rear retaining bolts.

Loosely install the front seat.

2. Connect the front seat base electrical connectors.

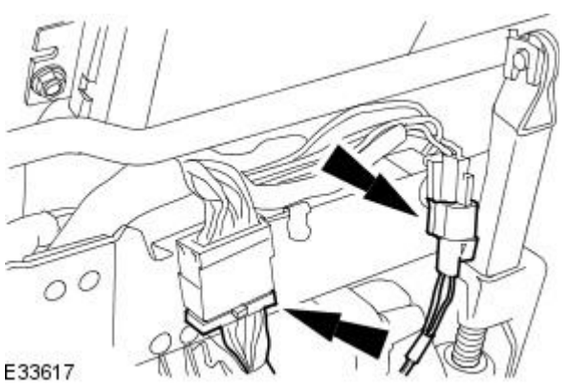

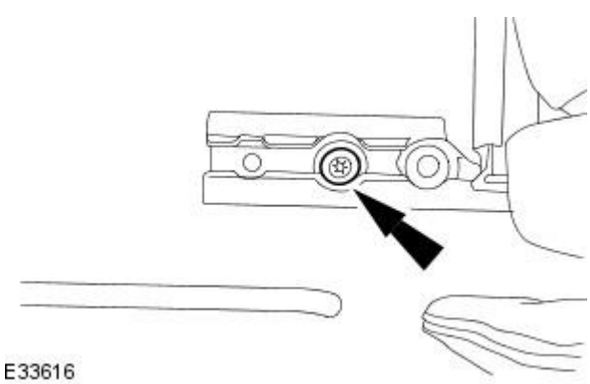

3. NOTE: Front seat right-hand rear retaining bolt shown, front seat left-hand rear retaining bolt similar.

Install the front seat rear retaining bolts.

- Tighten to 25 Nm.

4. Carry out the battery reconnection procedure.
For additional information, refer to Section 414-01 Battery, Mounting and Cables.

5. Position the front seat fully rearwards.

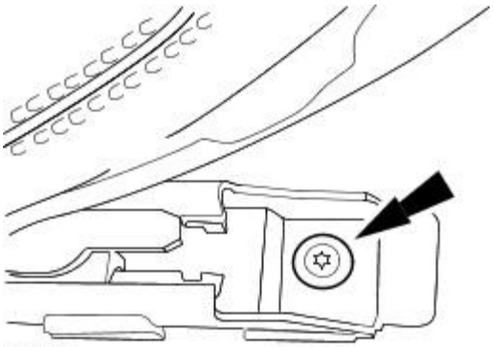

E33615

6. NOTE: Front seat right-hand front retaining bolt shown, front seat left-hand front retaining bolt similar.

• NOTE: Make sure the front seat base alignment brackets are in position before the front seat retaining bolts are installed.

Install the front seat front retaining bolts.

- Tighten to 25 Nm.

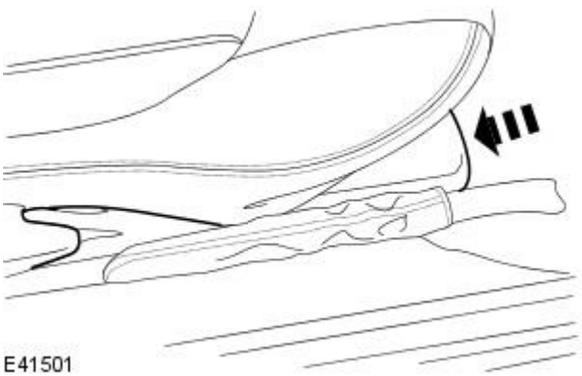

E41501

7. Install the front seat base trim panel.

Seating - Front Seat Backrest CoverVehicles Without: Recaro Seats

Removal and Installation

Removal

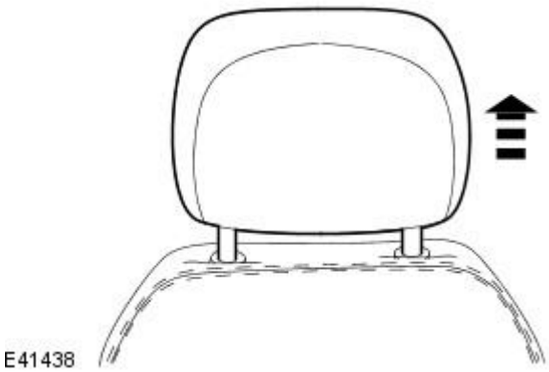

1. Remove the front seat.
   For additional information, refer to Front Seat - in this section.
2. Remove the front seat head restraint.

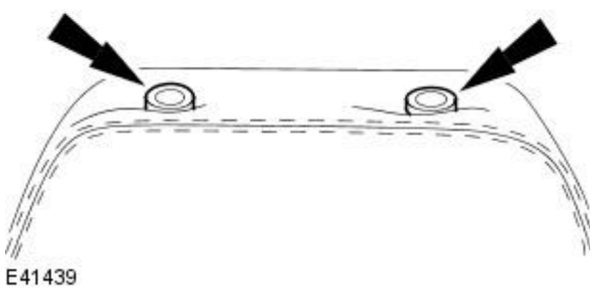

3. Remove the front seat head restraint retaining trims.

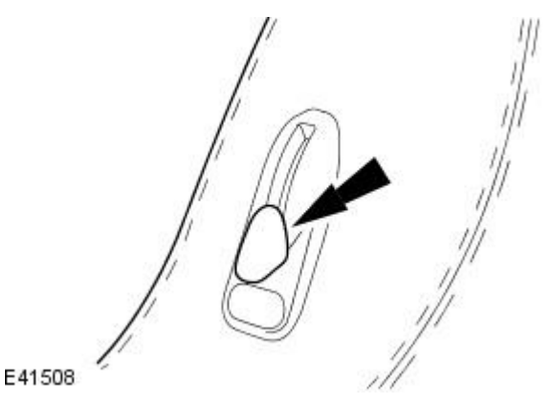

4. Remove the front seat tilt knob.

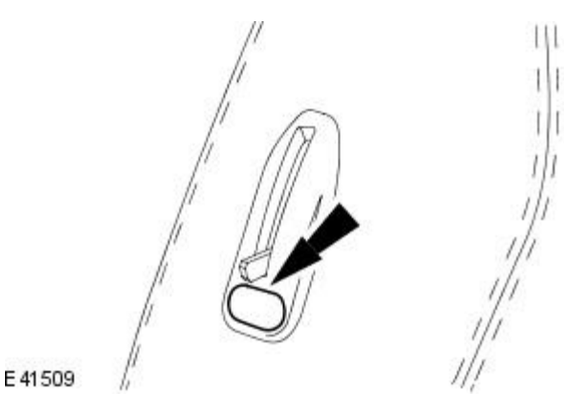

5. Remove the front seat tilt knob trim panel retaining screw trim cover.

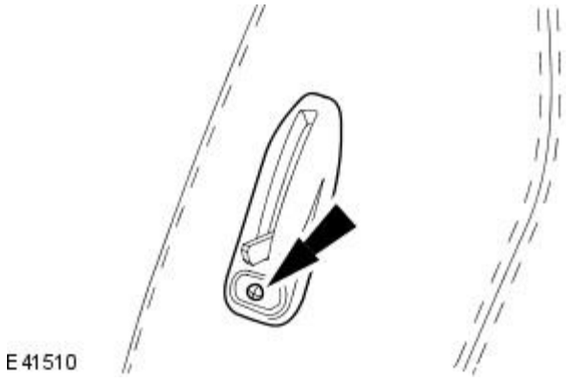
E41510

6. Remove the front seat tilt knob trim panel.

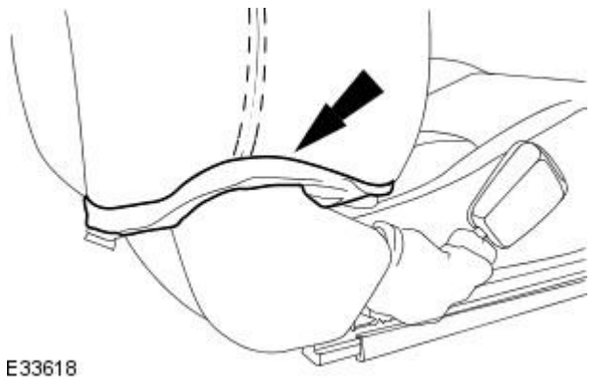
E33618

7. Reposition both front seat backrest hinge covers.

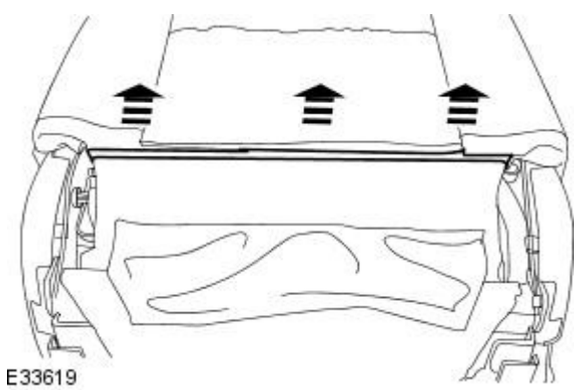
E33619

8. Release the front seat backrest cover rear lower retaining clips.

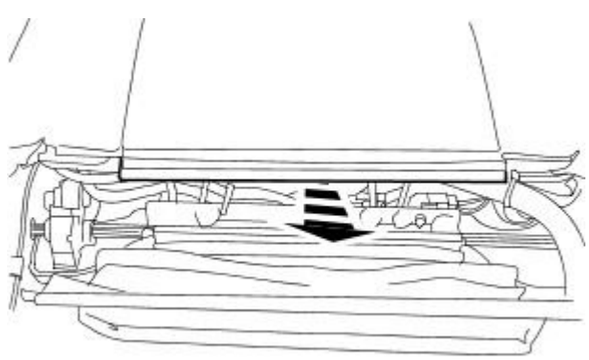
E33620

9. Remove the front seat backrest support panel.

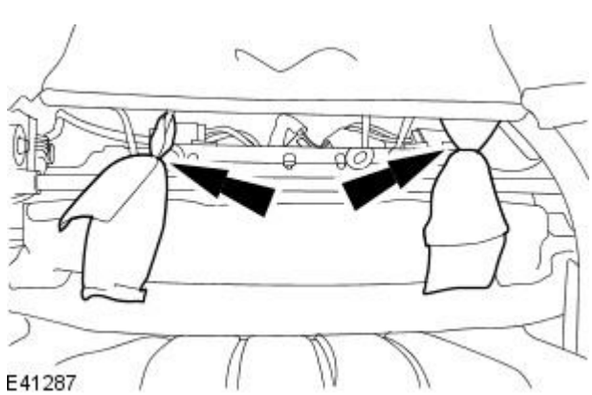
E41287

10. Release the front seat backrest cover retaining straps.

- Remove and discard the hog rings.

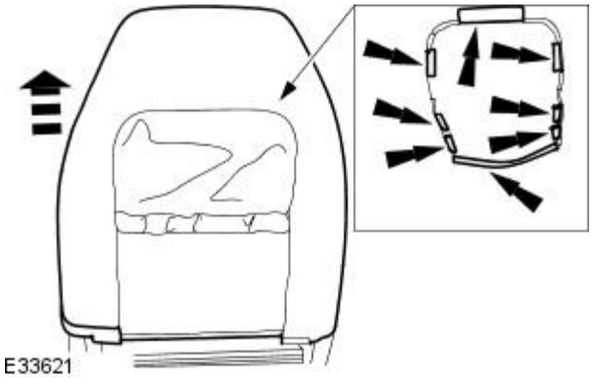

11. Reposition the front seat backrest cover.

- Release the front seat backrest cover internal retaining clips.

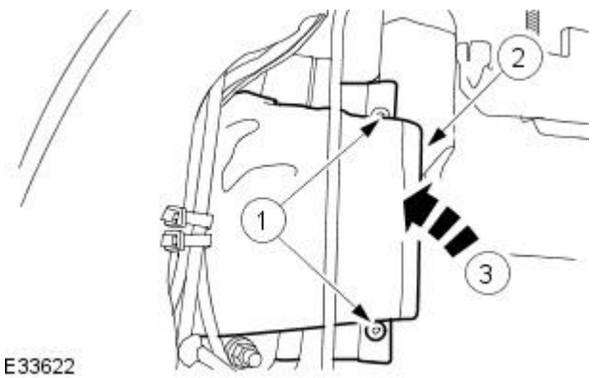

12. Reposition the side air bag module chute.

1. Remove and discard the rivet.
2. Reposition the side air bag module chute.

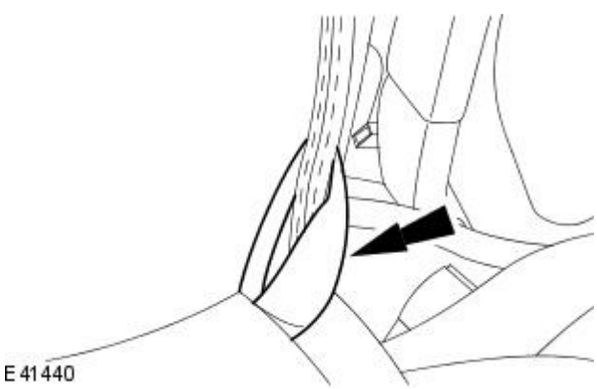

13. Reposition the side air bag module chute through the front seat backrest cover.

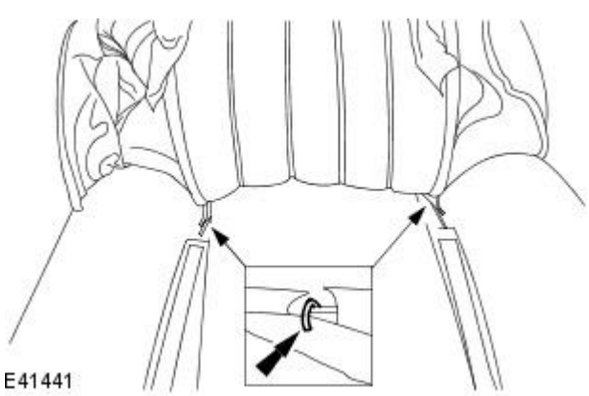

14. Remove and discard the hog rings.

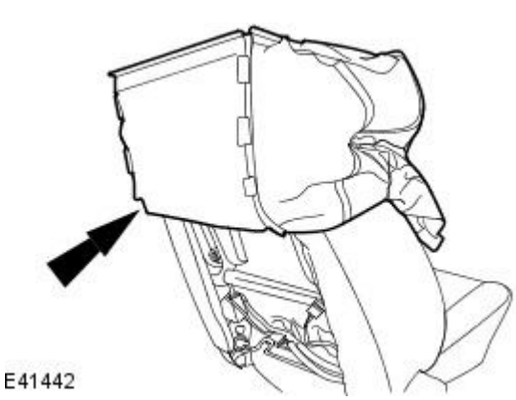

15. Remove the front seat cover.

Installation

1. NOTE: Install new hog rings.

- NOTE: Install new rivets.

To install, reverse the removal procedure.

Seating - Front Seat Backrest CoverVehicles With: Recaro Seats

Removal and Installation

Removal

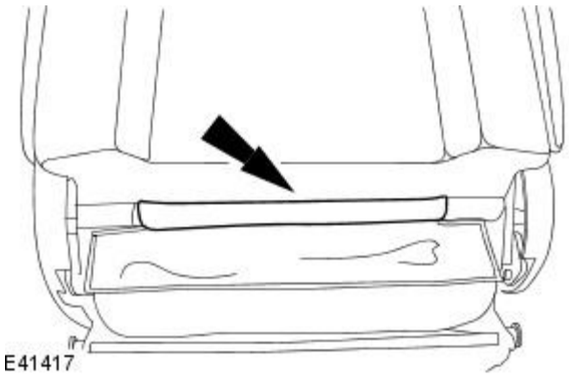

1. Adjust the front seat to the tilted position.
2. Release the front seat backrest cover rear lower retaining clip.

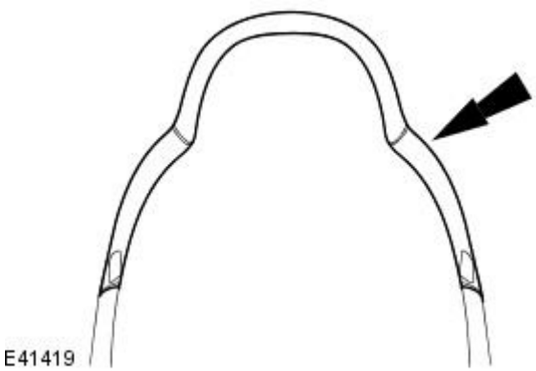

3. Release the front seat backrest cover rear upper retaining clips.

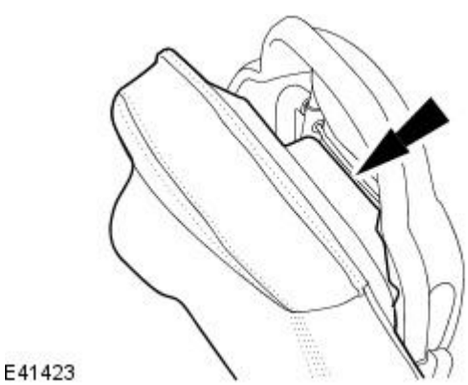

4. Using a suitable knife, detach the front seat backrest cover from the front seat frame.

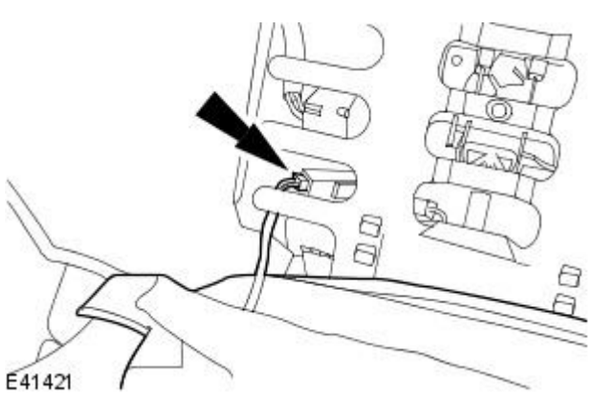

5. Remove the front seat backrest.
   - Disconnect the front seat backrest heater mat electrical connector.

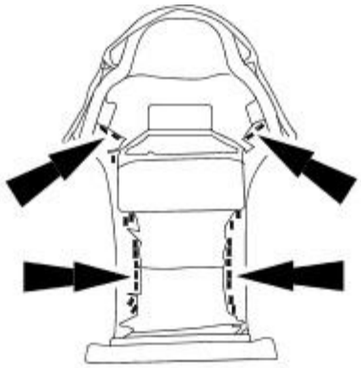

E41445

6. Remove and discard the front seat backrest cover retaining staples.

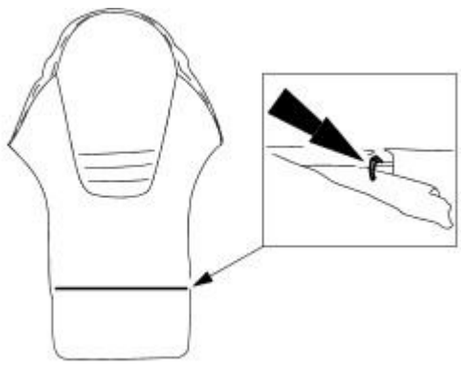

E41443

7. Remove and discard the hog rings.

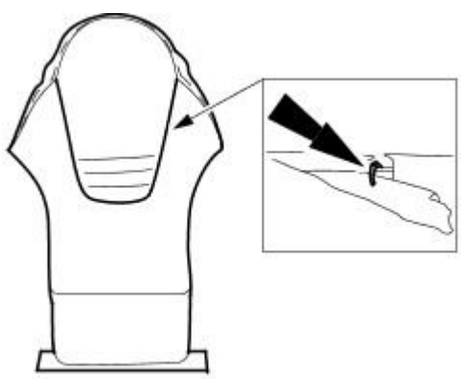

E41444

8. Remove the front seat backrest cover.

- Remove and discard the hog rings.

Installation

1. NOTE: Install new hog rings.

• NOTE: Install new retaining staples.

To install, reverse the removal procedure

Seating - Front Seat Backrest Heater MatVehicles Without: Recaro Seats

Removal and Installation

Removal

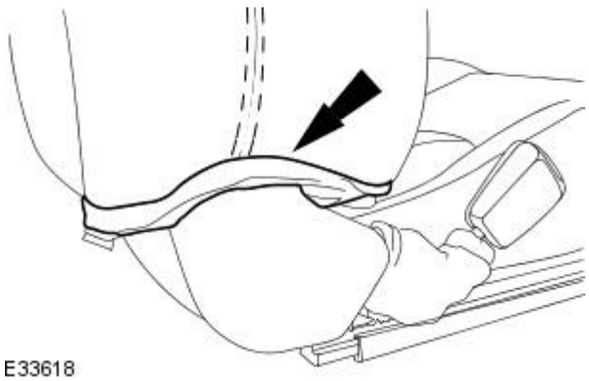
E33618

1. Remove the front seat.
   For additional information, refer to Front Seat in this section.
2. Reposition both front seat backrest hinge covers.

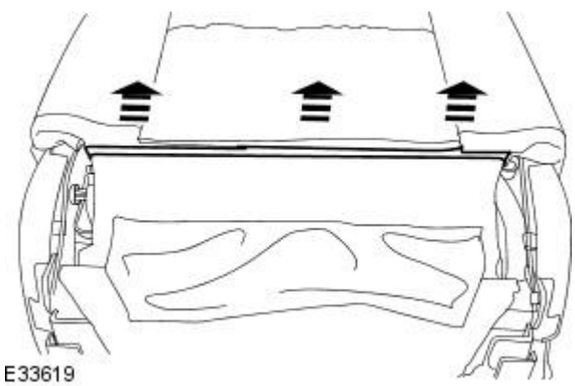
E33619

3. Release the front seat backrest cover rear lower retaining clips.

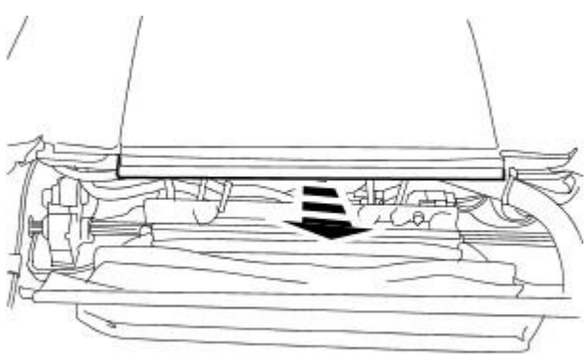
E33620

4. Remove the front seat backrest support panel.

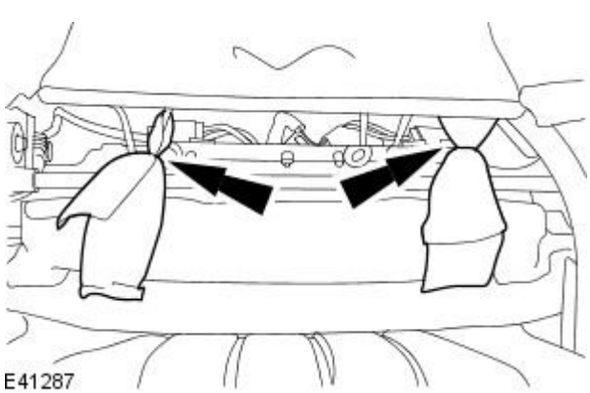
E41287

5. Release the front seat backrest cover retaining straps.
   - Remove and discard the hog rings.

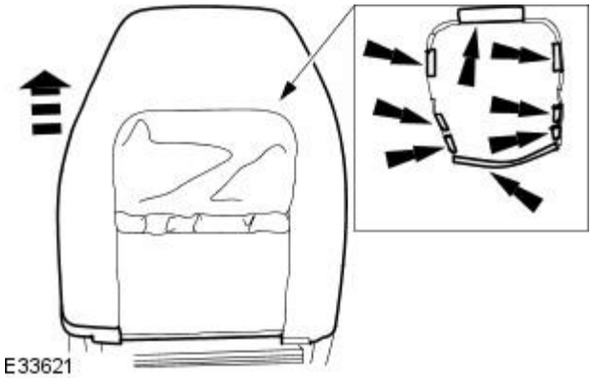

6. Reposition the front seat backrest cover.

- Release the front seat backrest cover internal retaining clips.

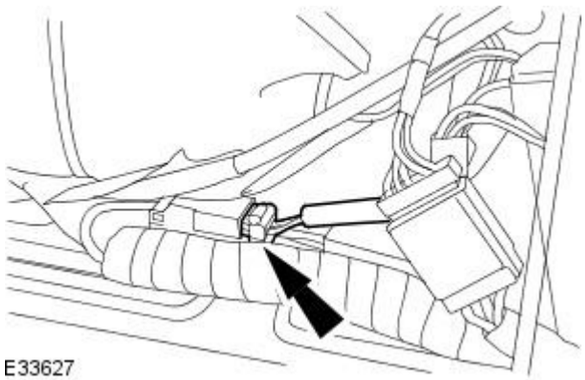

7. Disconnect the front seat backrest heater mat electrical connector.

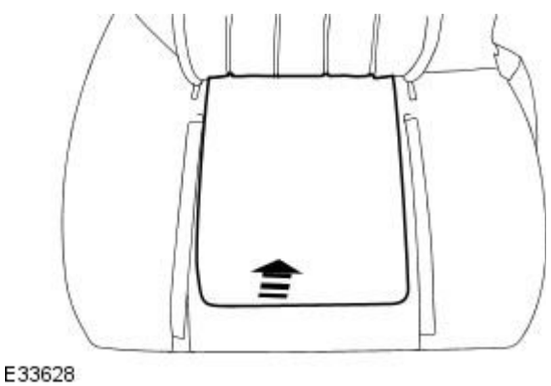

8. Remove the front seat backrest heater mat.

Installation

1. To install, reverse the removal procedure.

Seating - Front Seat Backrest Heater MatVehicles With: Recaro Seats

Removal and Installation

Removal

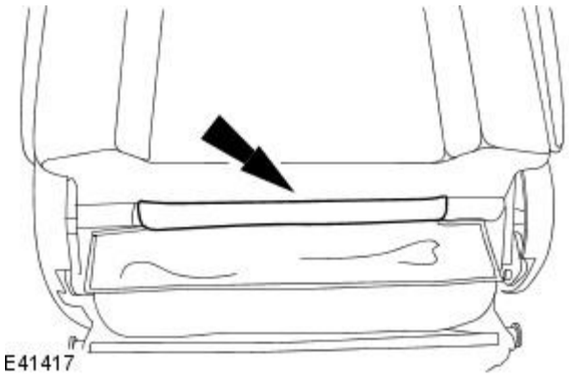

1. Adjust the front seat to the tilted position.
2. Release the front seat backrest cover rear lower retaining clip.

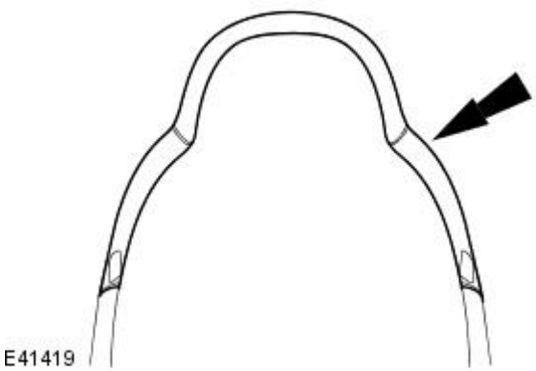

3. Release the front seat backrest cover rear upper retaining clips.

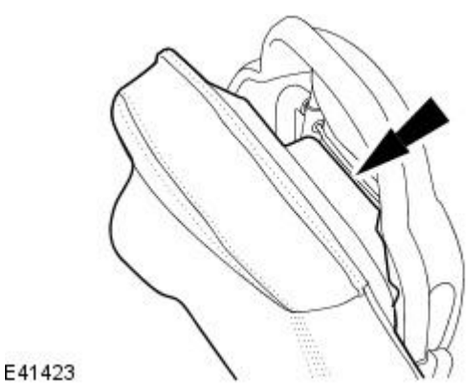

4. Using a suitable knife, detach the front seat backrest cover from the front seat frame.

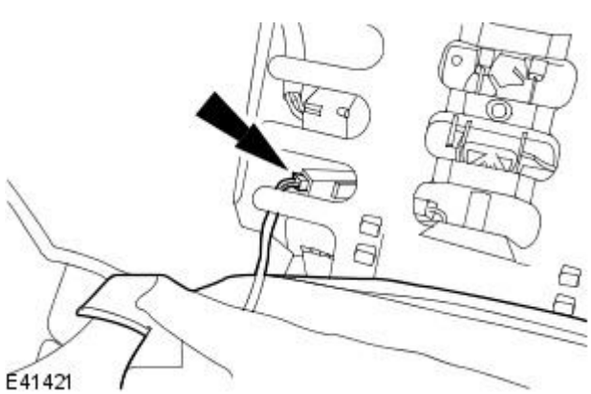

5. Remove the front seat backrest.
   - Disconnect the front seat backrest heater mat electrical connector.

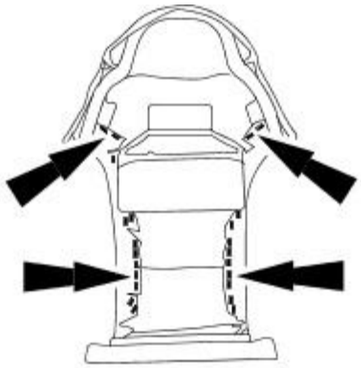

E41445

6. Remove and discard the front seat backrest cover retaining staples.

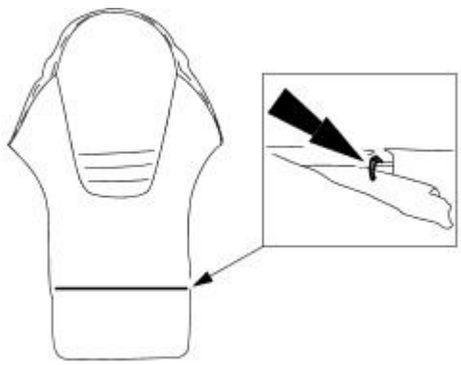

E41443

7. Remove and discard the hog rings.

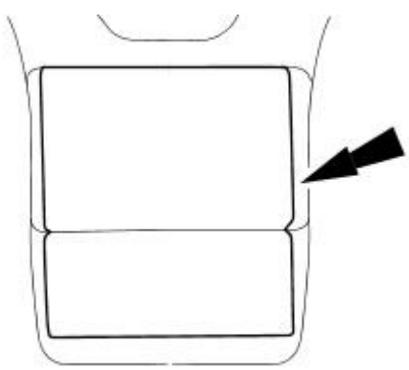

E41522

8. Reposition the front seat backrest cover.

9. Remove the front seat backrest heater mat.

Installation

1. NOTE: Install new hog rings.

- NOTE: Install new retaining staples.

To install, reverse the removal procedure.

Seating - Front Seat Cushion CoverVehicles Without: Recaro Seats

Removal and Installation

Removal

Driver seat and front passenger seat

1. Remove the front seat.
   For additional information, refer to Front Seat - in this section.
2. Remove the seat control switch.
   For additional information, refer to Seat Control Switch - in this section.

Driver seat

3. Remove the driver seat module (DSM).
   For additional information, refer to Section 419-10 Multifunction Electronic Modules.

Front passenger seat

4. Remove the passenger seat module (PSM).
   For additional information, refer to Section 419-10 Multifunction Electronic Modules.

Driver seat and front passenger seat

5. Remove the seat base retaining nuts.

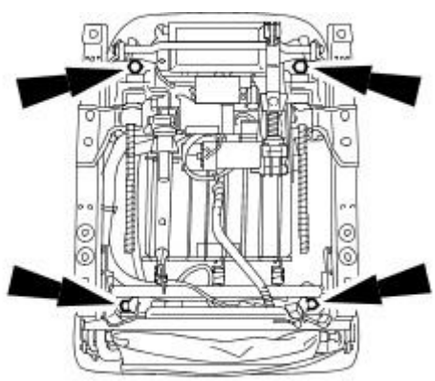

E33633

6. Detach the lower finish panel.

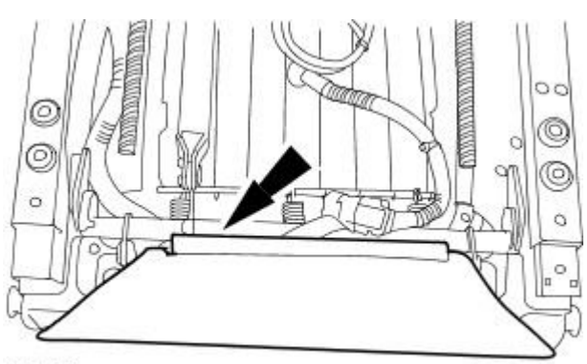

E33634

7. Disconnect the front seat cushion heater mat electrical connector.

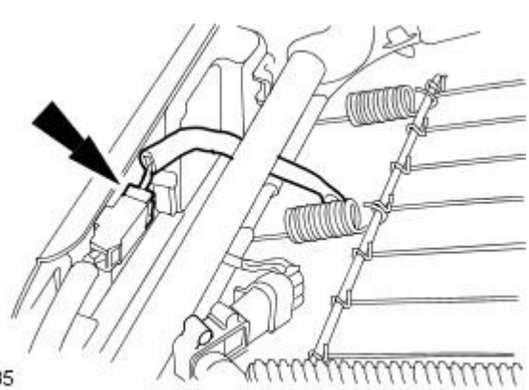

E33635

Front passenger seat

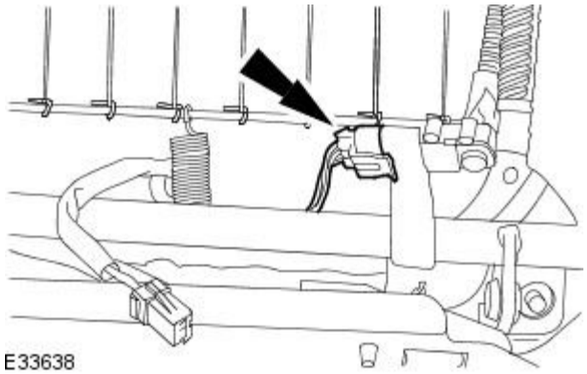

8. Disconnect the front passenger seat occupant classification sensor electrical connector.

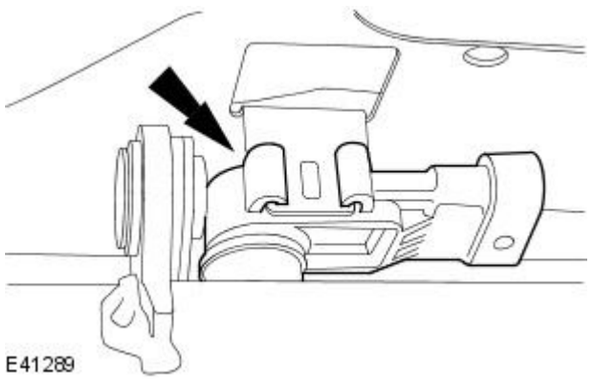

9. Detach the front passenger seat occupant classification sensor.

Driver seat and front passenger seat

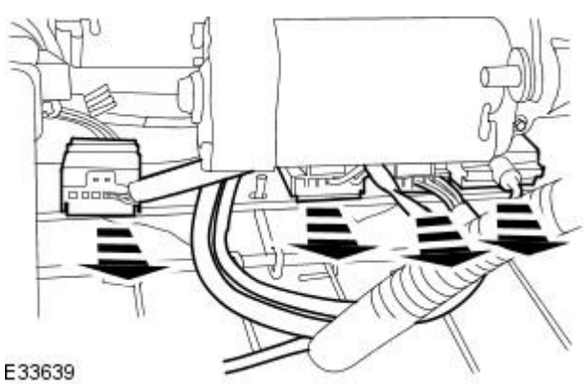

10. Detach the electrical connectors.

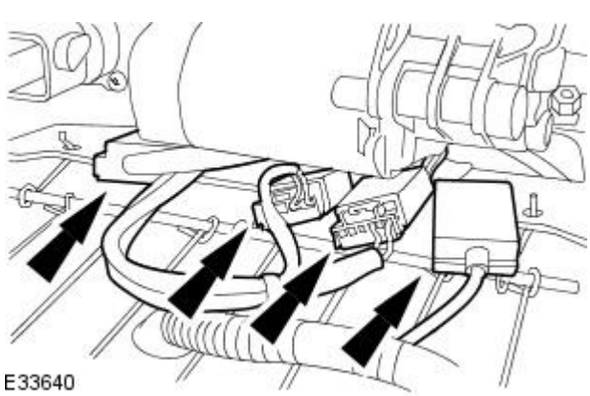

11. Disconnect the electrical connectors.

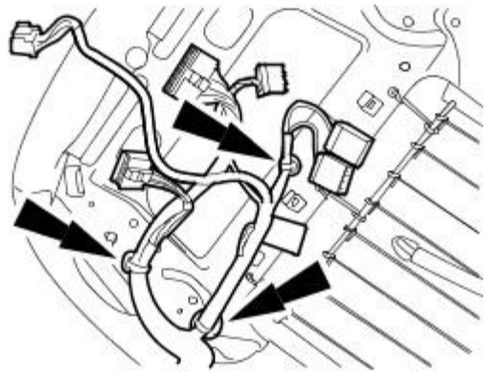

E33641

12. Detach the seat wiring harness.

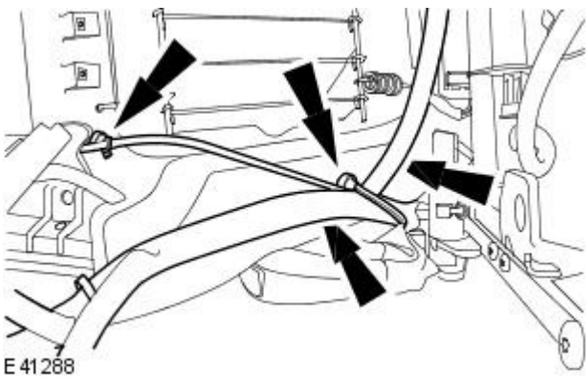

E41288

13. Detach the seat wiring harness.

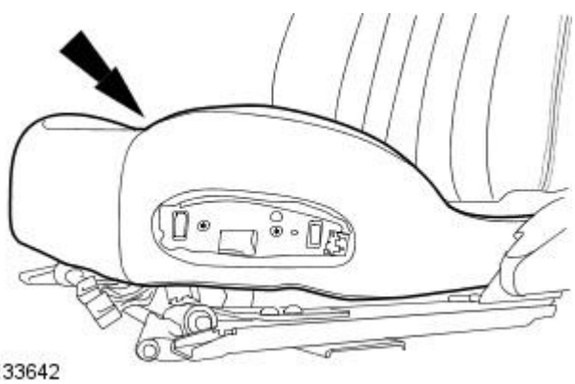

E33642

14. Remove the front seat cushion from the seat base.

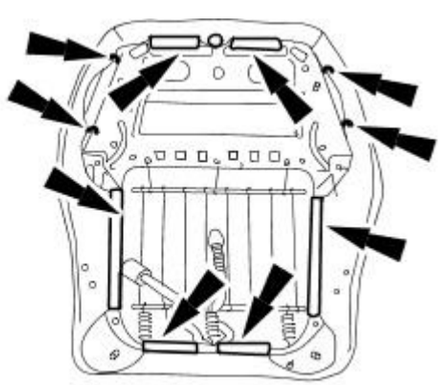

E33643

15. Detach the front seat cushion cover from the seat base.

- Remove and discard the hog rings.
- Release the retaining clips.

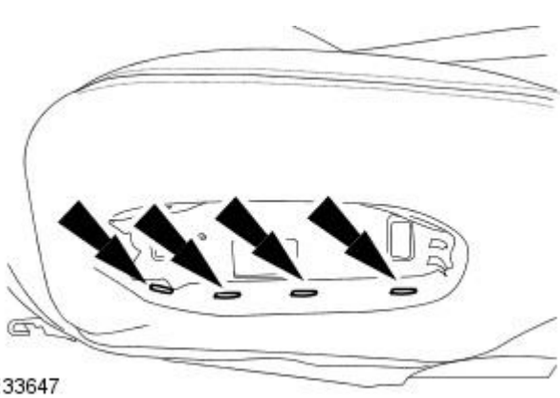

E33647

16. Remove and discard the front seat cushion cover retaining staples.

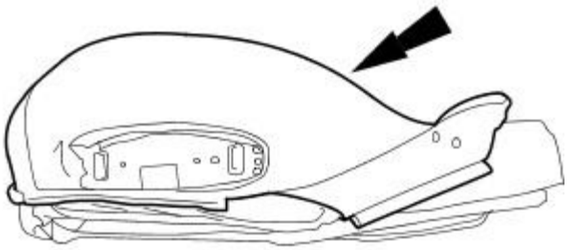

E33648

17. Detach the front seat cushion cover.

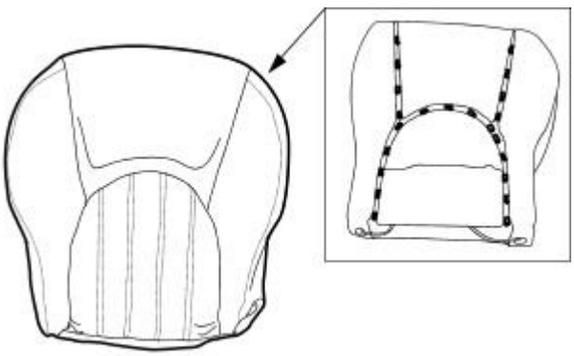

E33649

18. Remove the front seat cushion cover.

- Remove and discard the hog rings.

Installation

1. NOTE: Install new retaining staples.

• NOTE: Install new hog rings.

To install, reverse the removal procedure.

Seating - Front Seat Cushion CoverVehicles With: Recaro Seats

Removal and Installation

Removal

Driver seat and front passenger seat

1. Remove the front seat.
   For additional information, refer to Front Seat - in this section.
2. Remove the seat control switch.
   For additional information, refer to Seat Control Switch - in this section.

Driver seat

3. Remove the driver seat module (DSM).
   For additional information, refer to Section 419-10 Multifunction Electronic Modules.

Front passenger seat

4. Remove the passenger seat module (PSM).
   For additional information, refer to Section 419-10 Multifunction Electronic Modules.

Driver seat and front passenger seat

5. Remove the seat base retaining nuts.

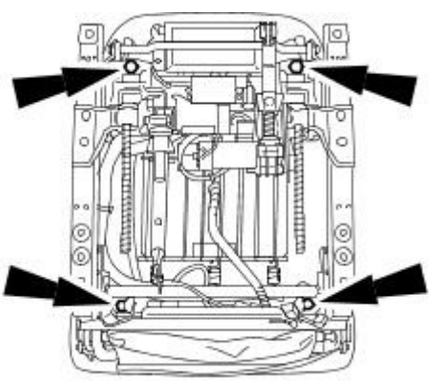

E33633

6. Detach the lower finish panel.

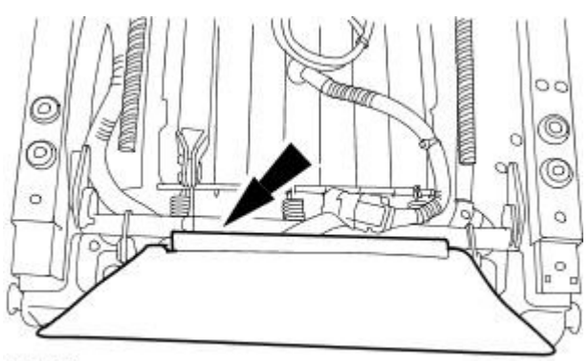

E33634

7. Detach the front seat cushion cover from the seat base.

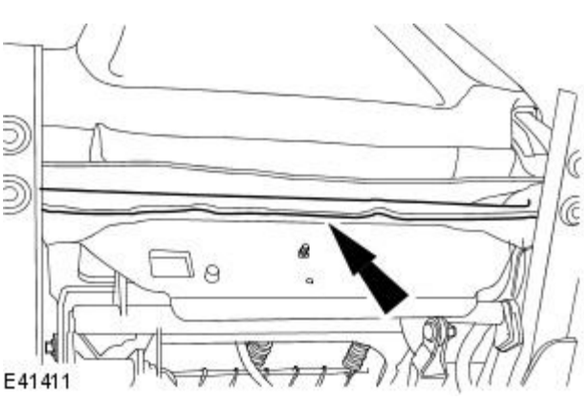

E41411

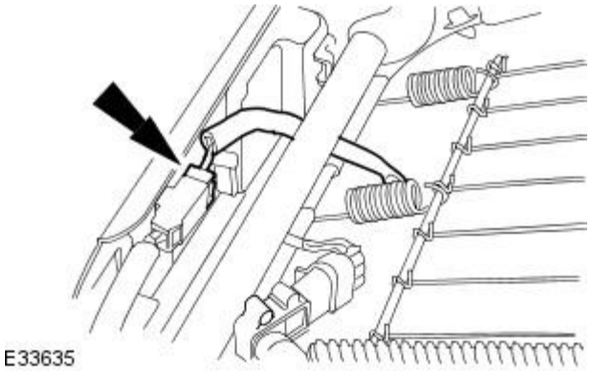

8. Disconnect the front seat cushion heater mat electrical connector.

Front passenger seat

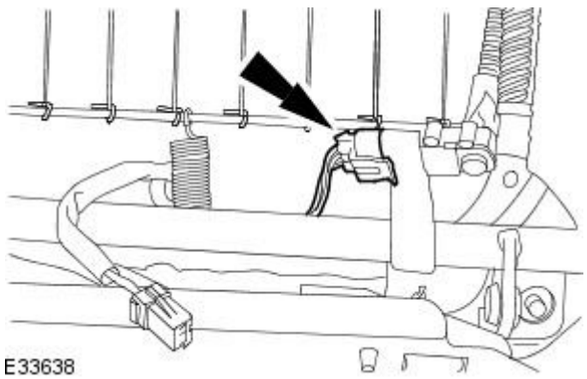

9. Disconnect the front passenger seat occupant classification sensor electrical connector.

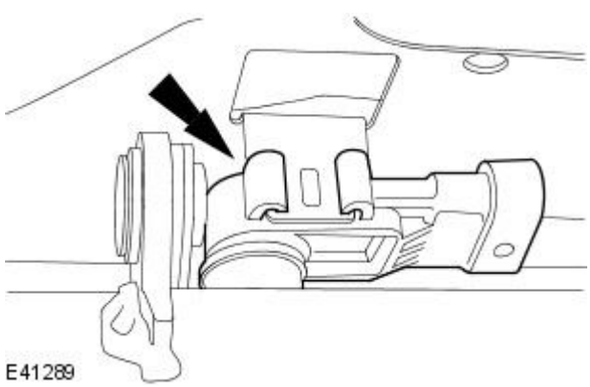

10. Detach the front passenger seat occupant classification sensor.

Driver seat and front passenger seat

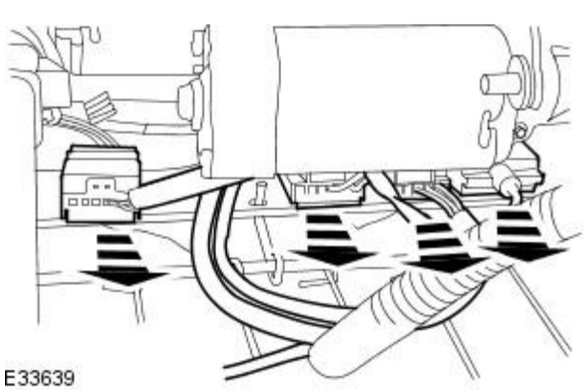

11. Detach the electrical connectors.

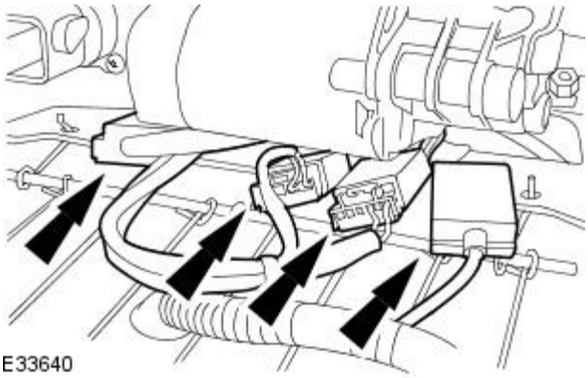

12. Disconnect the electrical connectors.

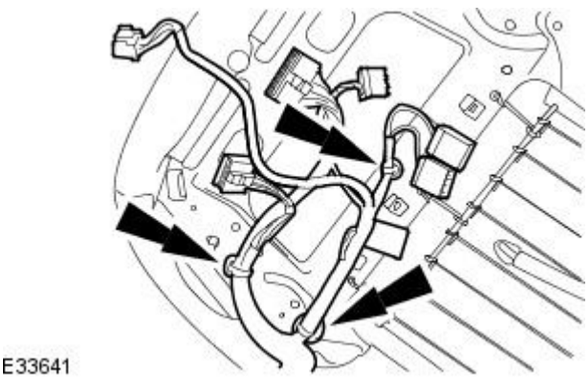

13. Detach the seat wiring harness.

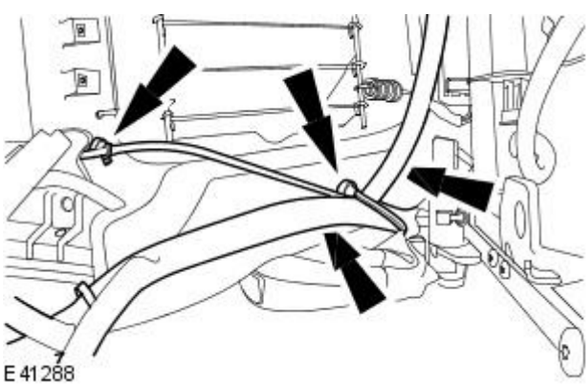

14. Detach the seat wiring harness.

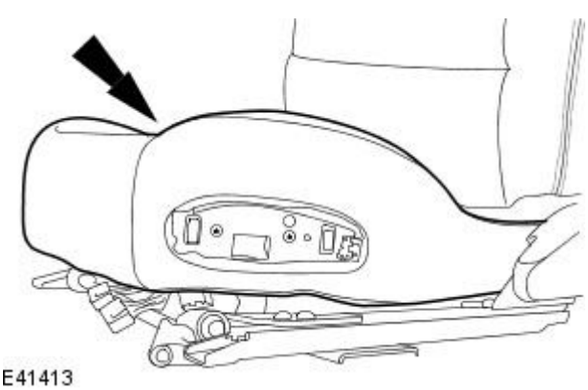

15. Remove the front seat cushion from the seat base.

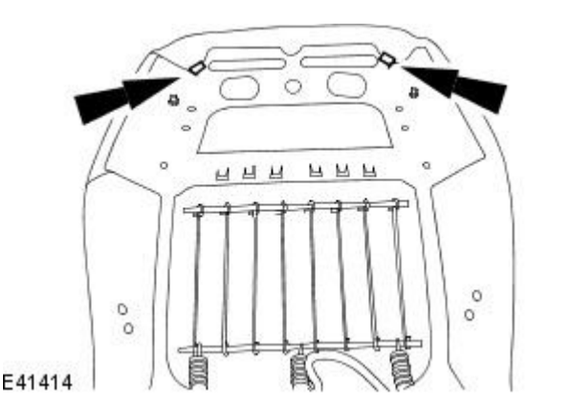

16. Remove and discard the front seat cushion cover front retaining clips.

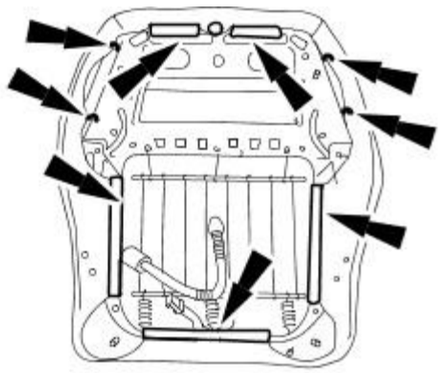

E41412

17. Detach the front seat cushion cover from the seat base.

- Remove and discard the hog rings.
- Release the retaining clips.

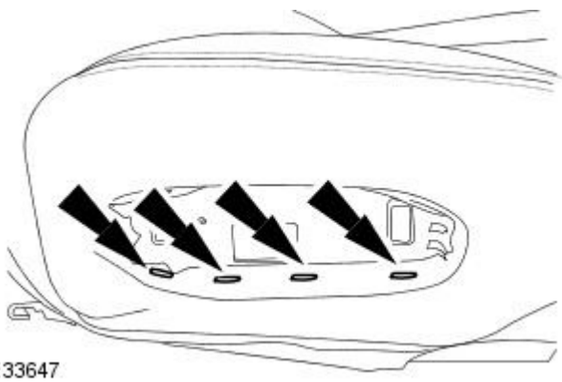

E33647

18. Remove and discard the front seat cushion cover retaining staples.

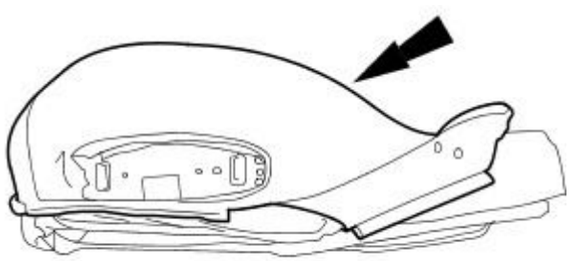

E33648

19. Detach the front seat cushion cover.

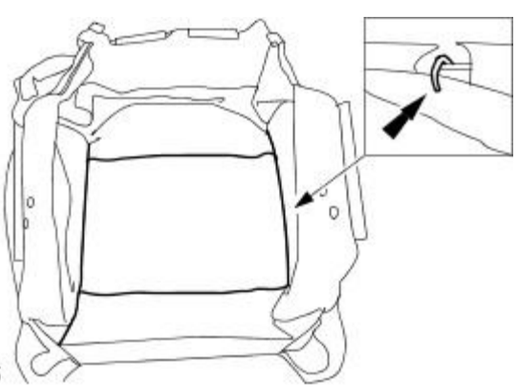

E41415

20. Remove the front seat cushion cover.

- Remove and discard the hog rings.

Installation

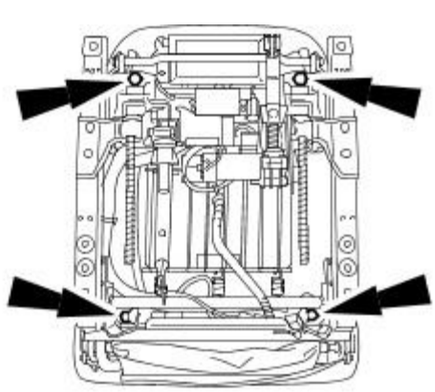

E33633

1. NOTE: Install new retaining staples.

• NOTE: Install new hog rings.

To install, reverse the removal procedure.

- Tighten to 25 Nm.

Published: 11-May-2011

Seating - Front Seat Cushion Heater MatVehicles Without: Recaro Seats

Removal and Installation

Removal

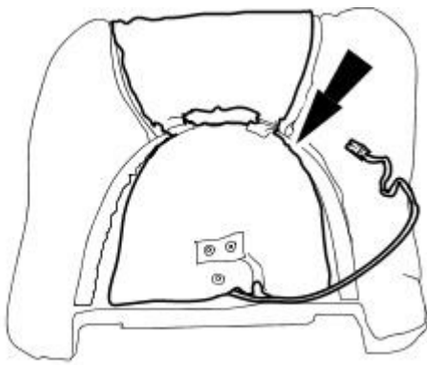

E33563

1. Remove the front seat cushion cover.
   For additional information, refer to Front Seat Cushion Cover - Vehicles Without: Sports Seats in this section.
2. Remove the front seat cushion heater mat.

Installation

1. To install, reverse the removal procedure.

Published: 11-May-2011

Seating - Front Seat Cushion Heater MatVehicles With: Recaro Seats

Removal and Installation

Removal

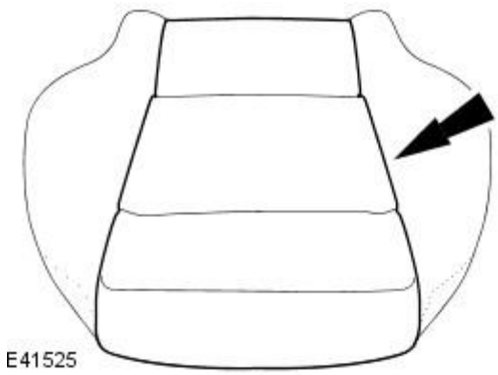

1. Remove the front seat cushion cover.
   For additional information, refer to Front Seat Cushion Cover - Vehicles With: Sports Seats in this section.
2. Remove the seat cushion heater mat.

Installation

1. To install, reverse the removal procedure.

Seating - Front Seat Head Restraint ModuleVehicles Without: Recaro Seats

Removal and Installation

Removal

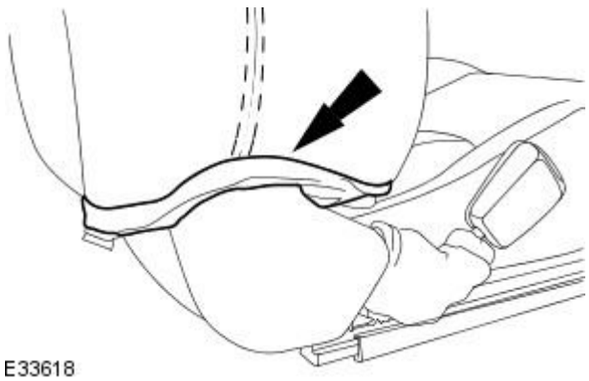

E33618

1. Remove the front seat.
   For additional information, refer to Front Seat - in this section.
2. Reposition the front seat backrest hinge covers.

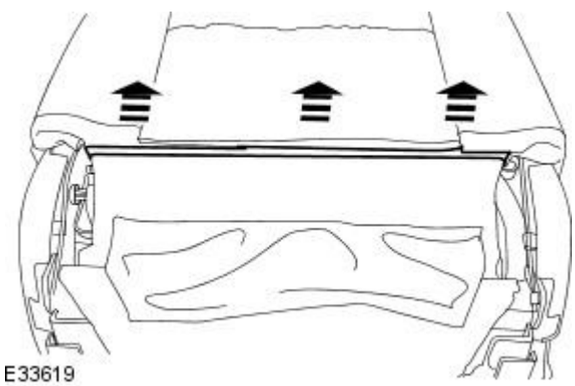

E33619

3. Release the front seat backrest cover rear lower retaining clips.

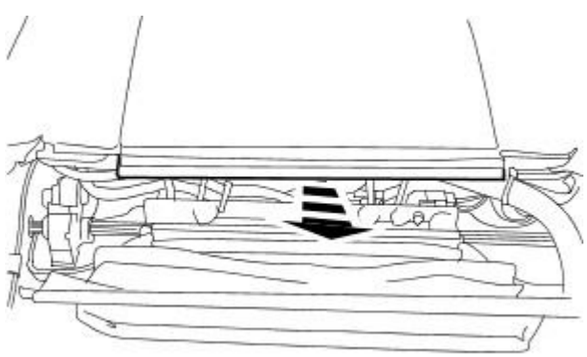

E33620

4. Remove the front seat backrest support panel.

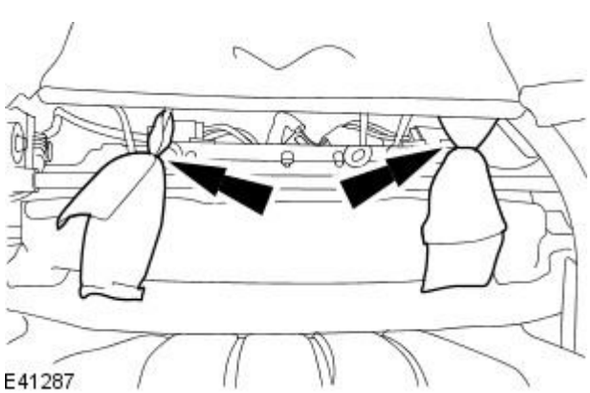

E41287

5. Release the front seat backrest cover retaining straps.
   - Remove and discard the hog rings.

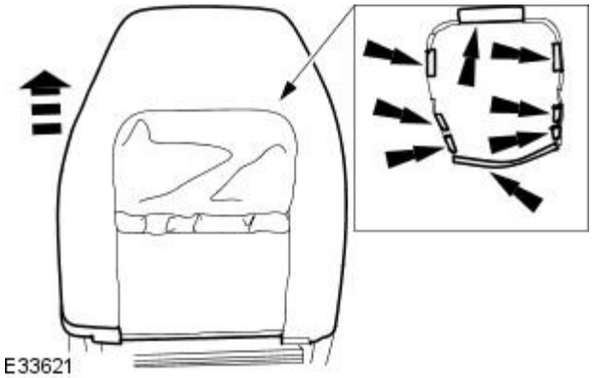

6. Reposition the front seat backrest cover.

- Release the front seat backrest cover internal retaining clips.

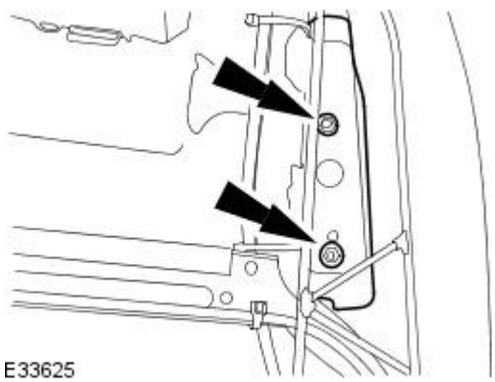

7. Detach the front seat head restraint module.

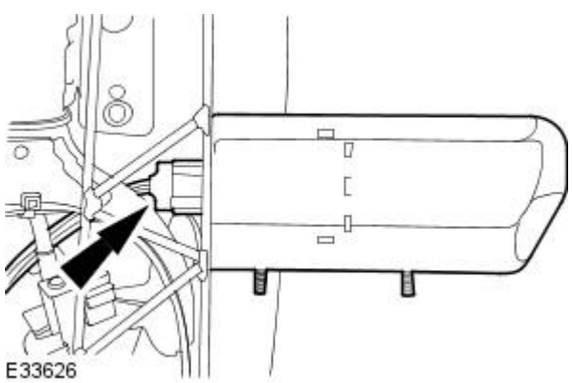

8. Remove the front seat head restraint module.

- Disconnect the electrical connector.

Installation

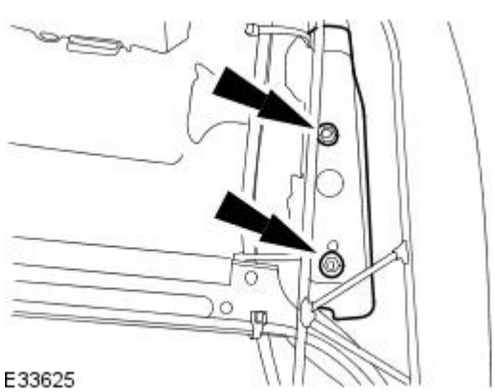

1. To install, reverse the removal procedure.

- Tighten to 7 Nm.

Seating - Front Seat Height Adjustment Motor

Removal and Installation

Removal

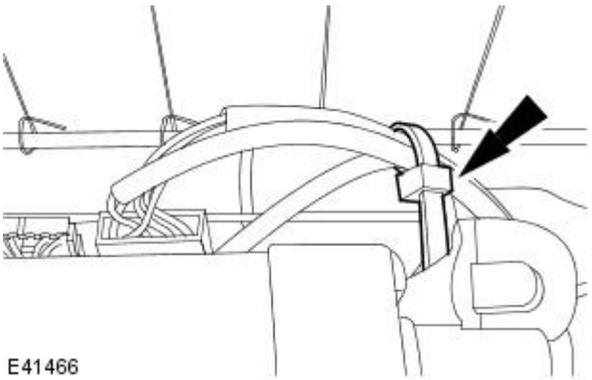

1. Remove the front seat.
   For additional information, refer to Front Seat - in this section.
2. Remove and discard the front seat height adjustment motor wiring harness tie strap.

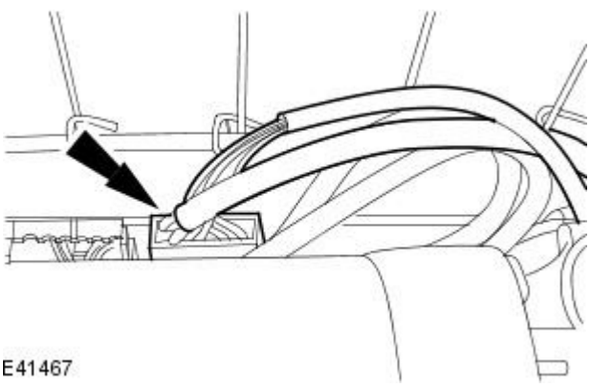

3. Disconnect the front seat height adjustment motor electrical connector.

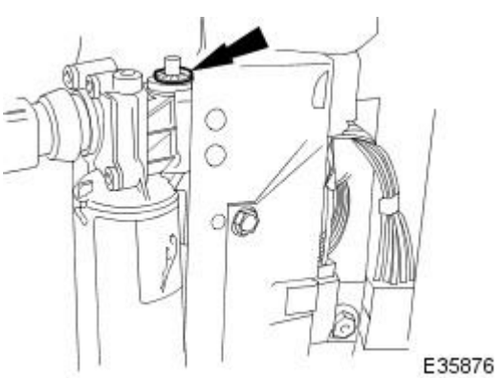

4. Remove and discard the front seat height adjustment motor clevis pin retaining clip.

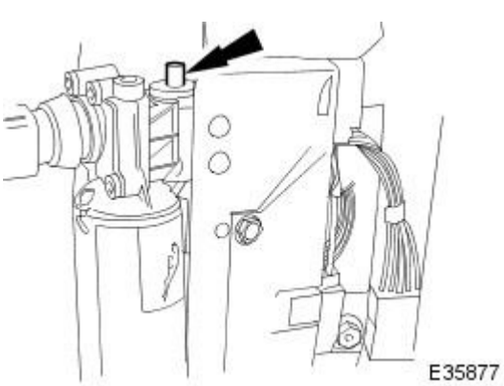

5. Remove the front seat height adjustment motor clevis pin.

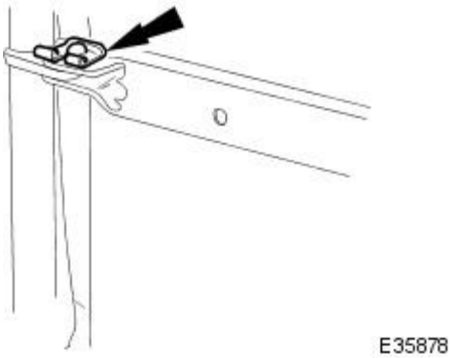

6. Remove the front seat track to front seat height adjustment motor pivot bar clevis pin.

- Remove the front seat track to front seat height adjustment motor pivot bar clevis pin clip.

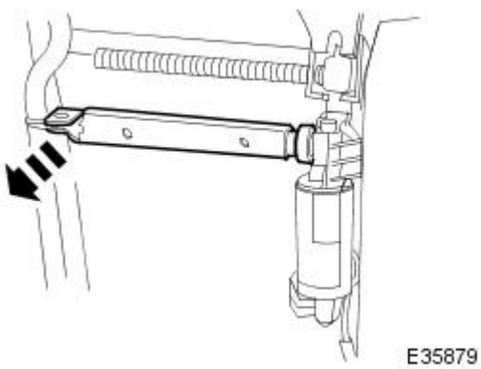

7. Detach the front seat height adjustment motor pivot bar.

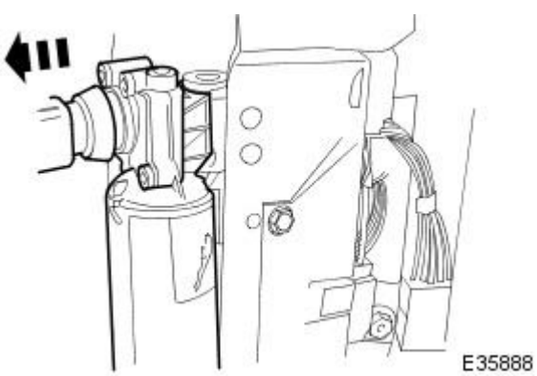

8. Remove the front seat height adjustment motor.

Installation

1. To install, reverse the removal procedure.

Seating - Front Seat Recliner MotorVehicles Without: Recaro Seats

Removal and Installation

Removal

1. Remove the front seat.
   For additional information, refer to Front Seat - in this section.
2. Reposition both front seat backrest hinge covers.

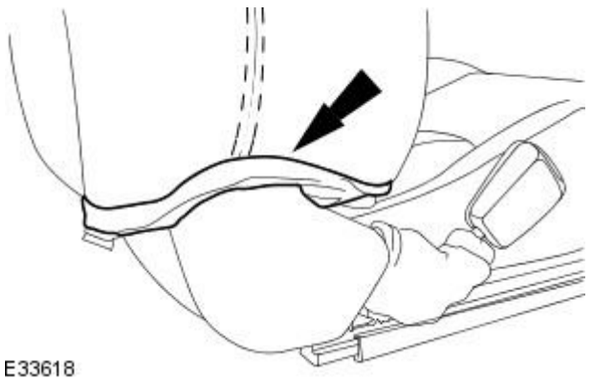

E33618

3. Release the front seat backrest cover rear lower retaining clips.

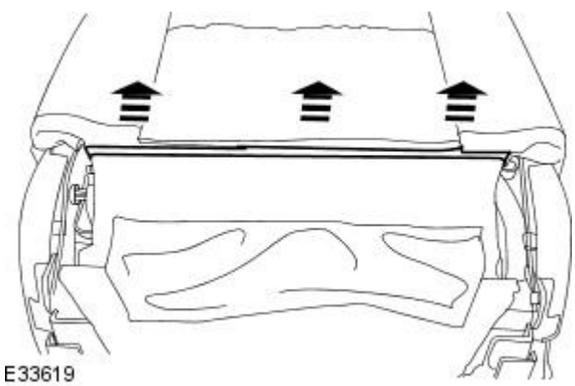

E33619

4. Remove the front seat backrest support panel.

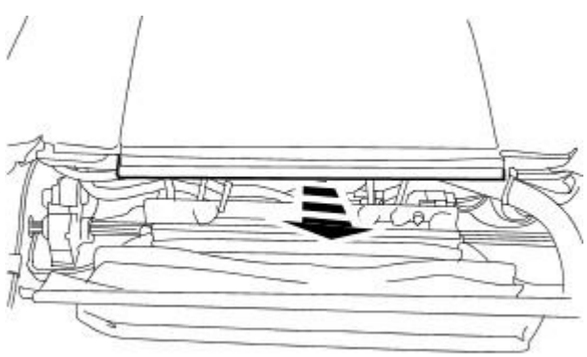

E33620

5. Release the front seat backrest cover retaining straps.
   - Remove and discard the hog rings.

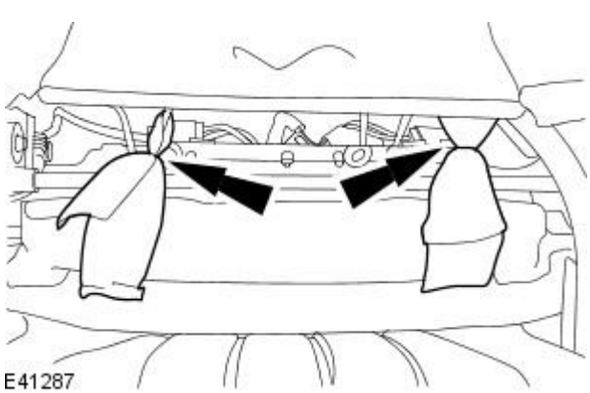

E41287

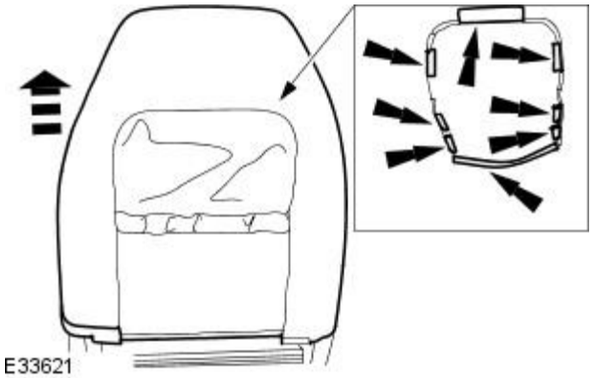

6. Reposition the front seat backrest cover.

- Release the front seat backrest cover internal retaining clips.

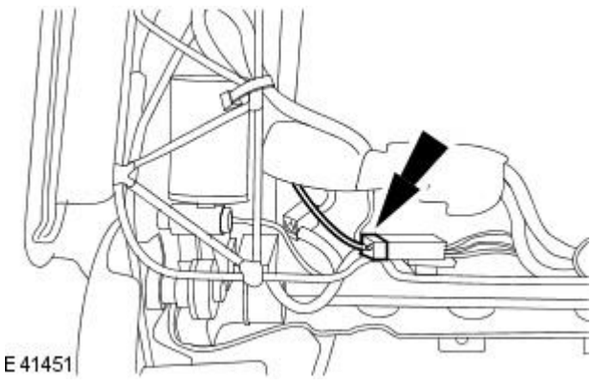

7. Disconnect the front seat recliner motor electrical connector.

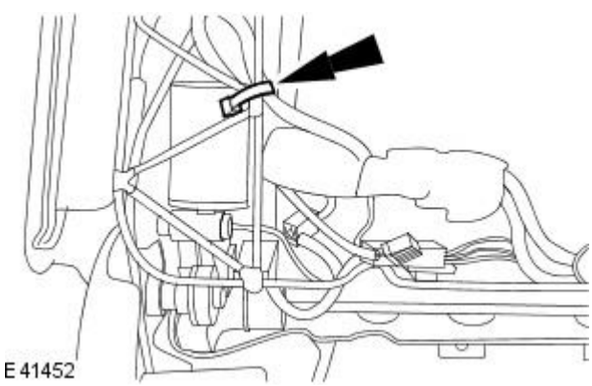

8. Remove and discard the front seat recliner motor wiring harness tie strap.

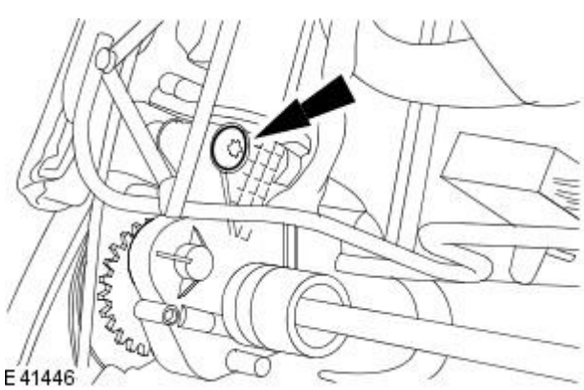

9. Remove the front seat recliner motor retaining bolt.

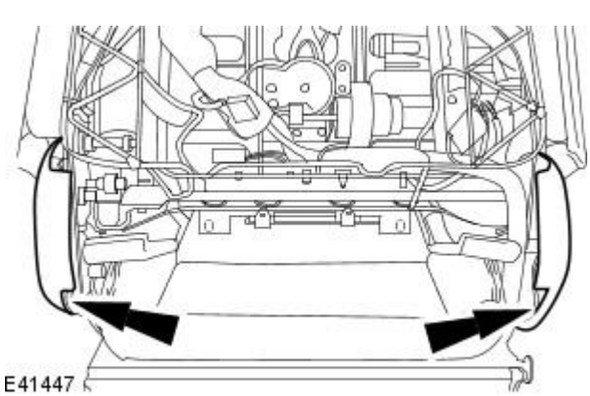

10. Remove the front seat backrest hinge trim covers.

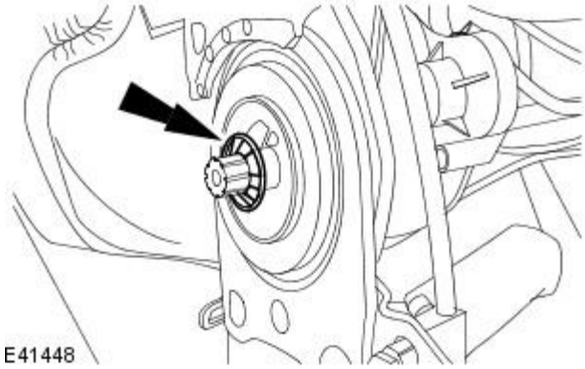

11. Remove and discard the front seat recliner motor spindle retaining clip.

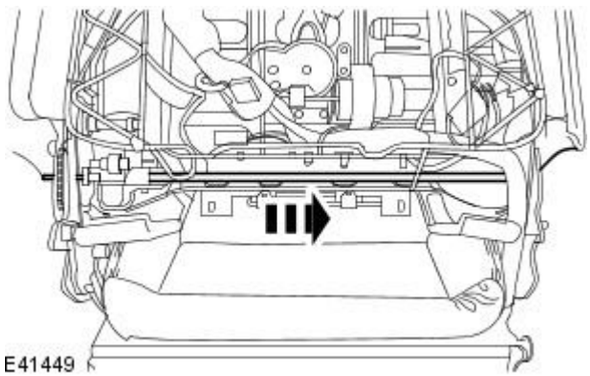

12. Reposition the front seat recliner motor spindle.

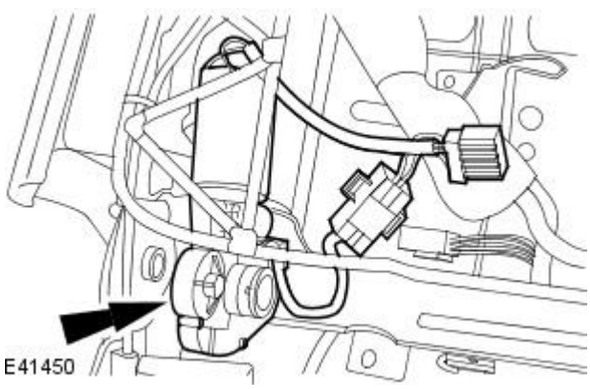

13. Remove the front seat recliner motor.

Installation

1. NOTE: Install a new spindle retaining clip.

- NOTE: Install a new tie strap.

To install, reverse the removal procedure.

Seating - Front Seat Recliner MotorVehicles With: Recaro Seats

Removal and Installation

Removal

1. Remove the front seat.
   For additional information, refer to Front Seat - in this section.
2. Release the front seat backrest cover rear lower retaining clip.

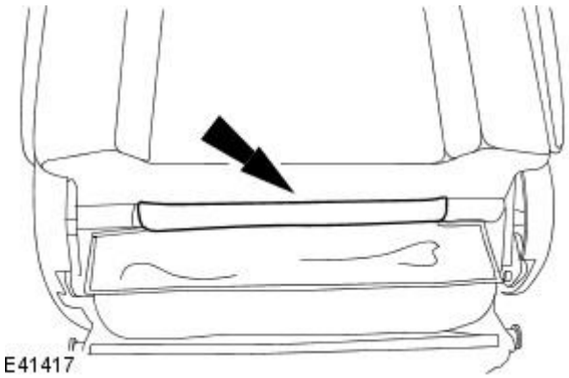

3. Detach the front seat backrest cover rear upper retaining clips.

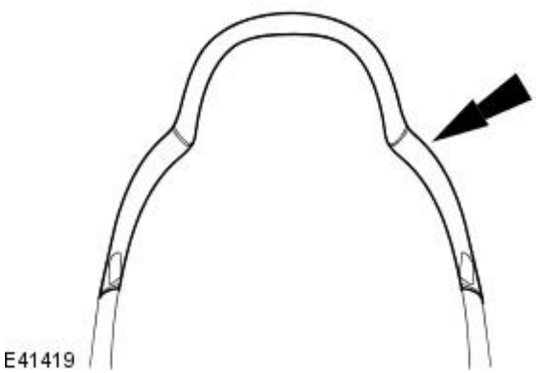

4. Using a suitable knife, detach the front seat backrest cover from the front seat frame.

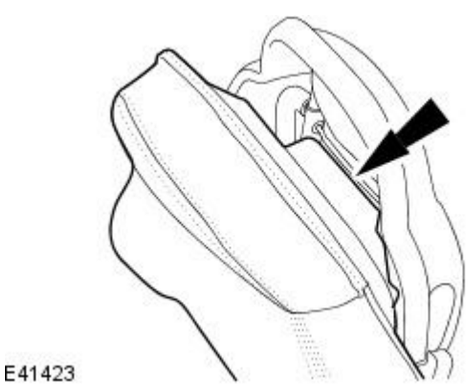

5. Remove the front seat backrest.
   - Disconnect the front seat backrest heater mat electrical connector.

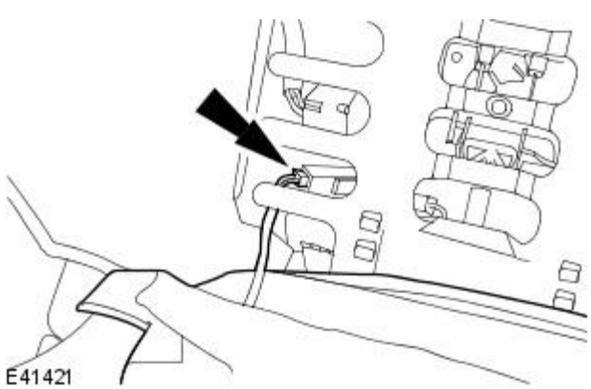

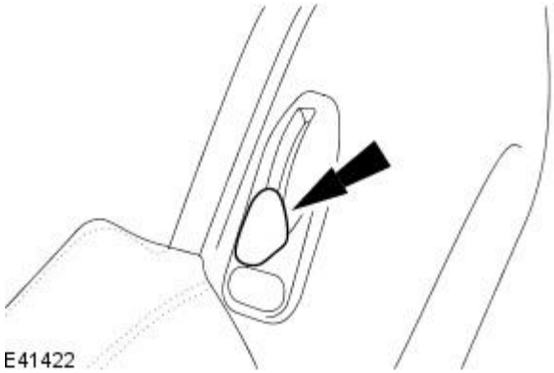

6. Remove the front seat tilt knob.

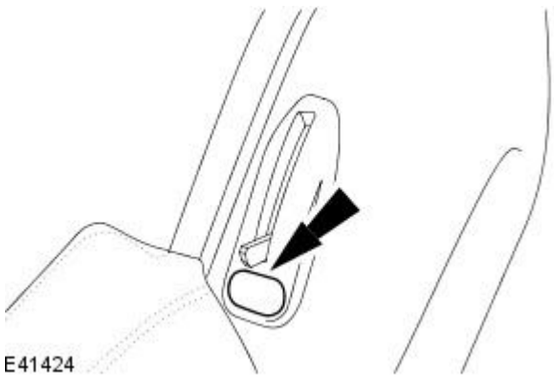

7. Remove the front seat tilt knob trim panel retaining screw trim cover.

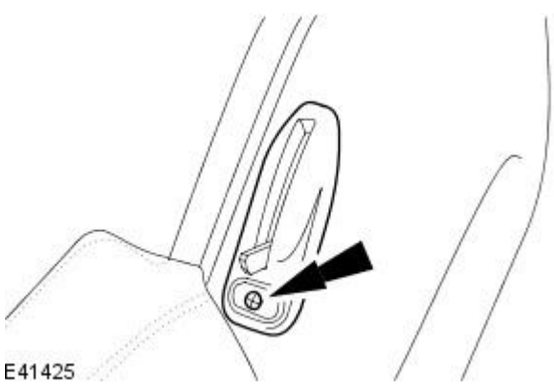

8. Remove the front seat tilt knob trim panel retaining screw.

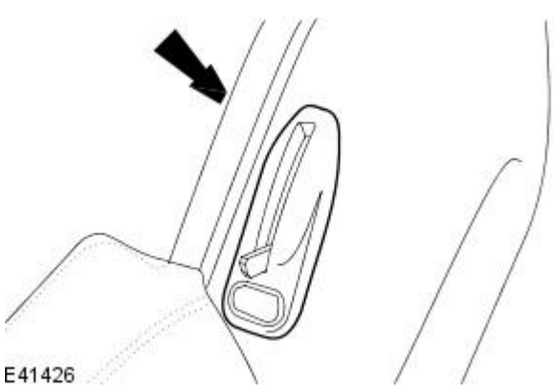

9. Remove the front seat tilt knob trim panel.

- Release the front seat tilt knob trim panel retaining tang from inside the front seat backrest frame.

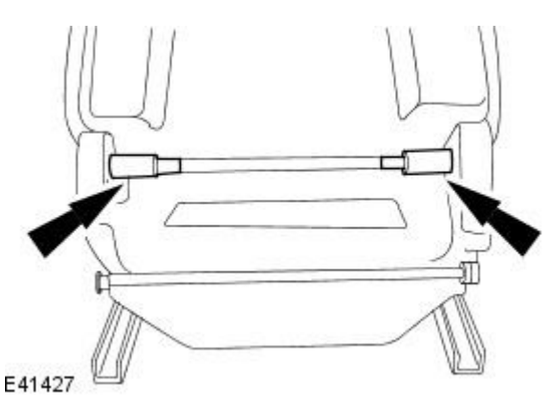

10. Detach the front seat backrest trim panel lower retaining clips.

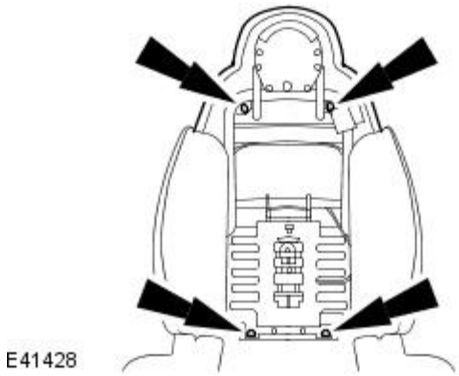

11. Remove the front seat backrest trim panel.

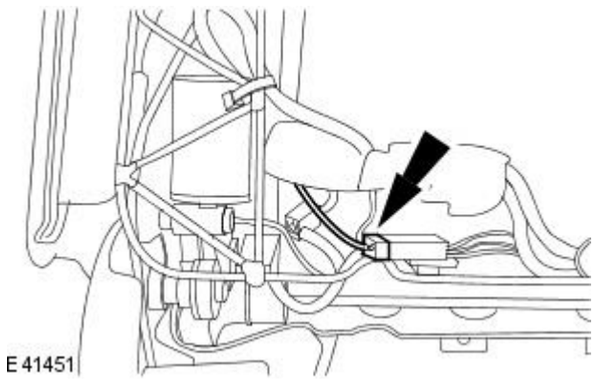

12. Disconnect the front seat recliner motor electrical connector.

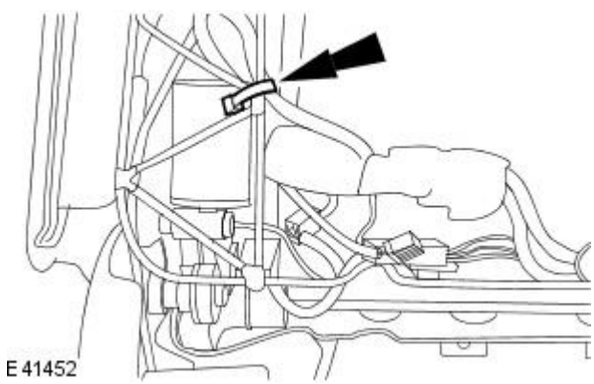

13. Remove and discard the front seat recliner motor wiring harness tie strap.

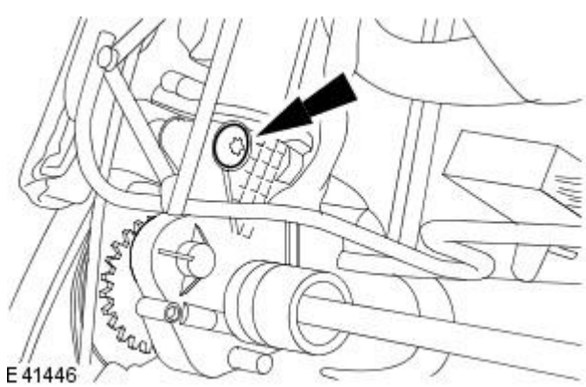

14. Remove the front seat recliner motor retaining bolt.

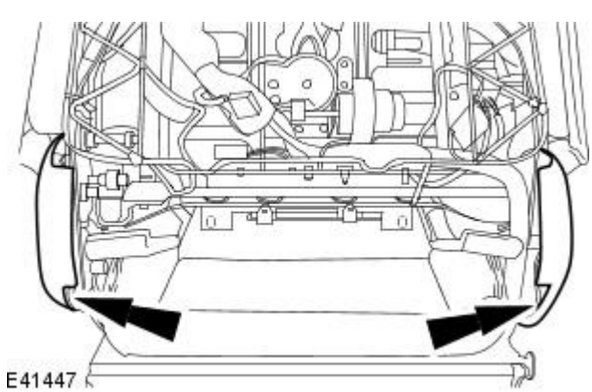

15. Remove the front seat backrest hinge trim covers.

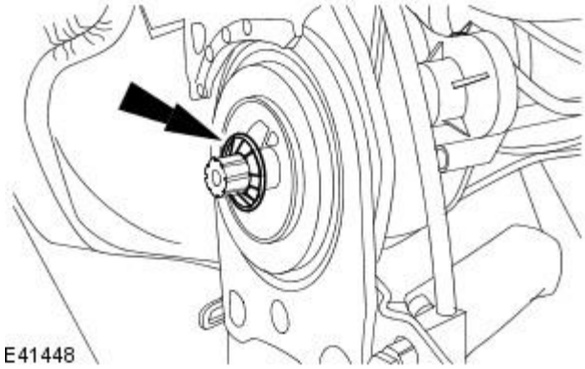

16. Remove and discard the front seat recliner motor spindle retaining clip.

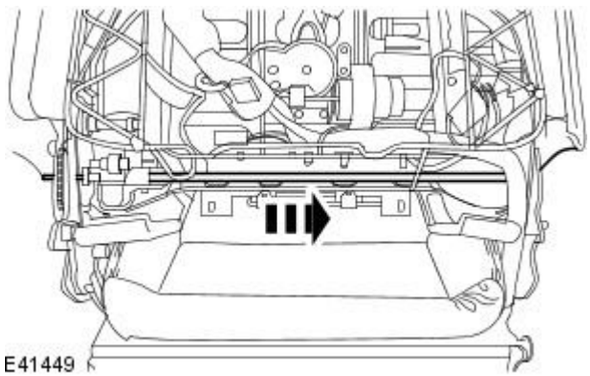

17. Reposition the front seat recliner motor spindle.

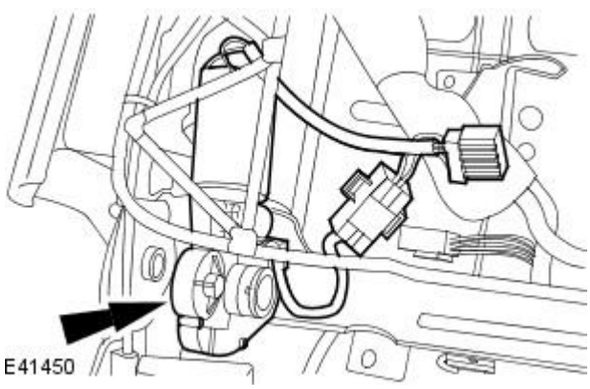

18. Remove the front seat recliner motor.

Installation

1. NOTE: Install a new spindle retaining clip.

- NOTE: Install a new tie strap.

To install, reverse the removal procedure.

Seating - Front Seat Track Motor

Removal and Installation

Removal

Driver seat and passenger seat

1. Remove the front seat height adjustment motor.
   For additional information, refer to Front Seat Height Adjustment Motor - in this section.

Driver seat

2. Remove the driver seat module (DSM).
   For additional information, refer to Section 419-10 Multifunction Electronic Modules.

Passenger seat

3. Remove the passenger seat module (PSM).
   For additional information, refer to Section 419-10 Multifunction Electronic Modules.

Driver seat and passenger seat

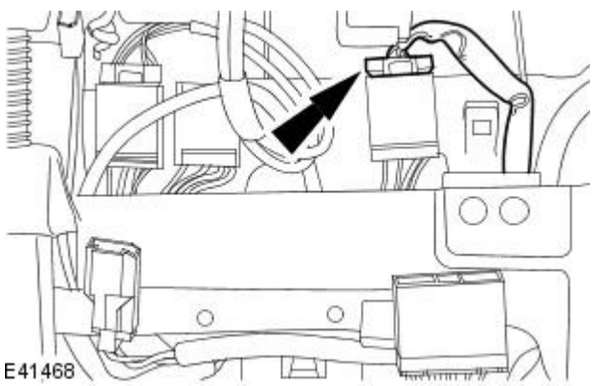

4. Disconnect the front seat track motor electrical connector.

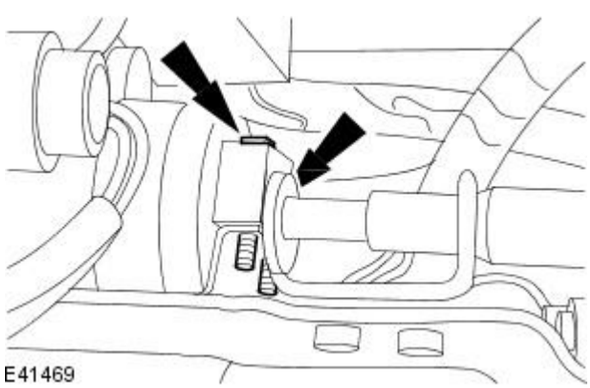

5. Remove the front seat track motor retaining bolts.

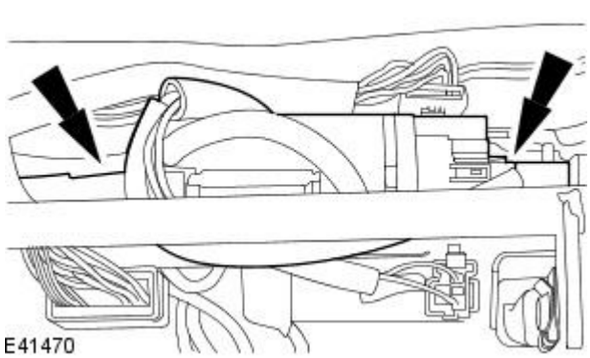

6. Remove the front seat track motor.
   - Detach the front seat track motor from the drive cables.

Installation

1. To install, reverse the removal procedure.

Seating - Lumbar MotorVehicles Without: Recaro Seats

Removal and Installation

Removal

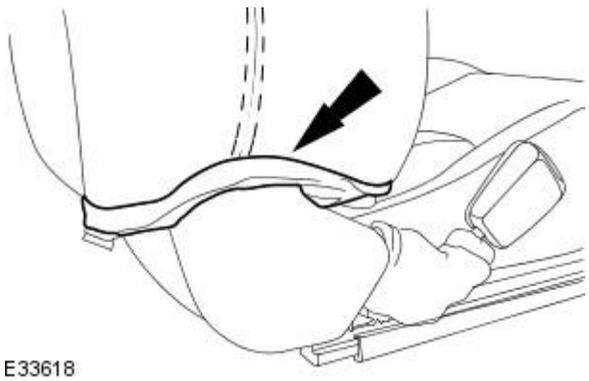

E33618

1. Remove the front seat.
   For additional information, refer to Front Seat in this section.
2. Reposition both front seat backrest hinge covers.

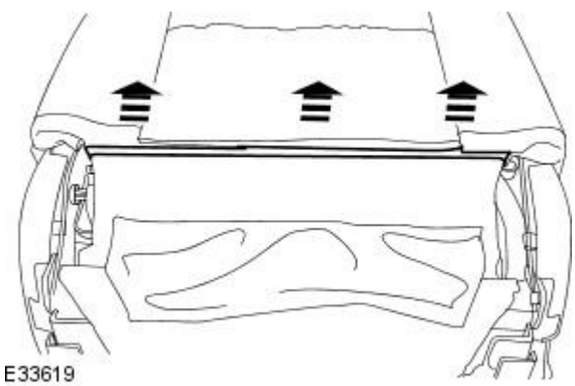

E33619

3. Release the front seat backrest cover rear lower retaining clips.

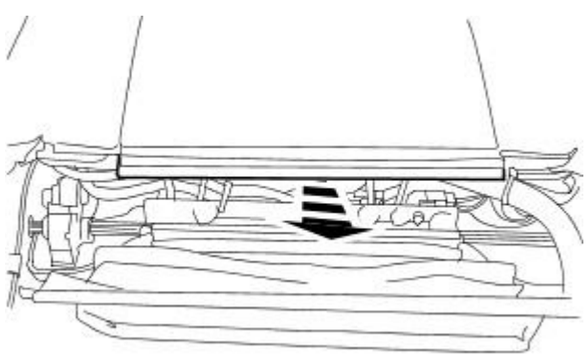

E33620

4. Remove the front seat backrest support panel.

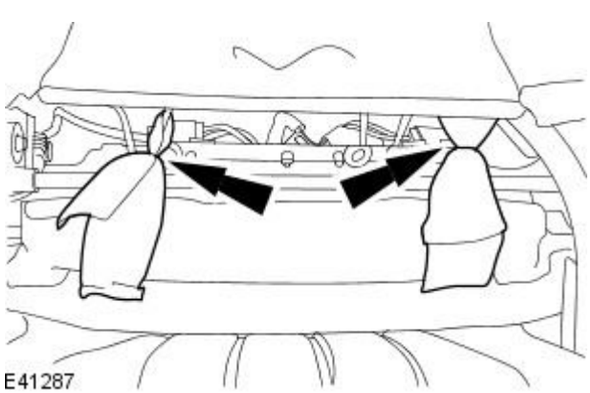

E41287

5. Release the front seat backrest cover retaining straps.
   - Remove and discard the hog rings.

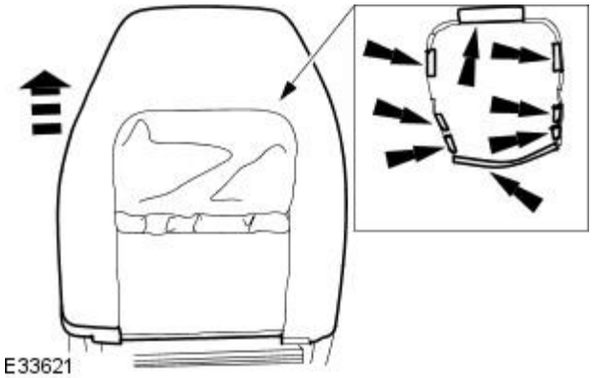

6. Reposition the front seat backrest cover.

- Release the front seat backrest cover internal retaining clips.

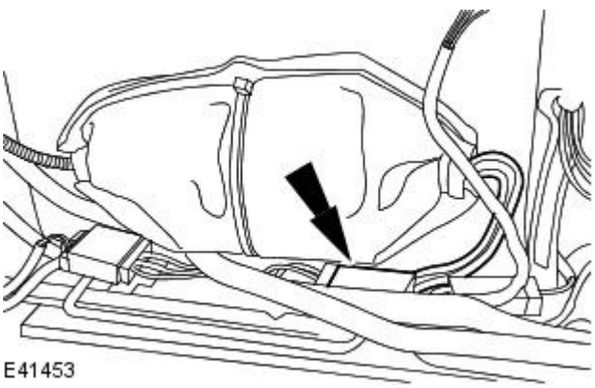

7. Disconnect the lumbar motor electrical connector.

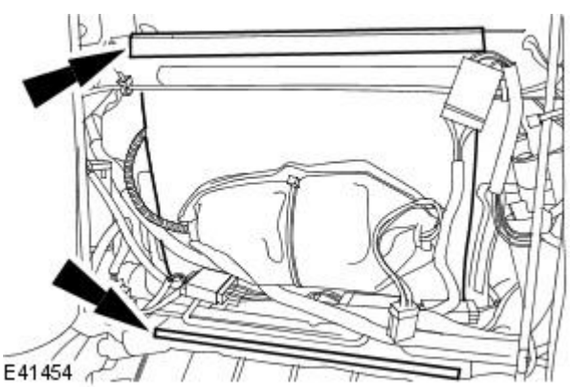

8. Remove the lumbar motor.

Installation

1. NOTE: Install new hog rings.

To install, reverse the removal procedure.

Seating - Lumbar MotorVehicles With: Recaro Seats

Removal and Installation

Removal

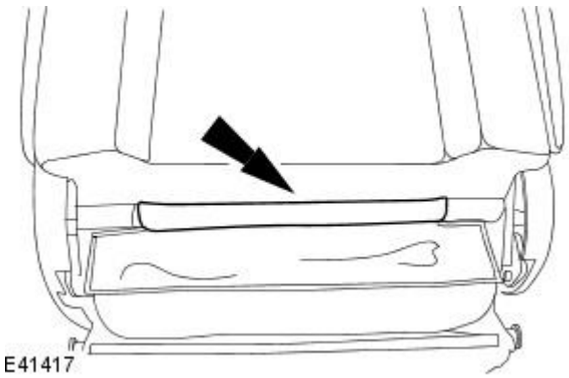

1. Detach the front seat backrest cover rear lower retaining clip.

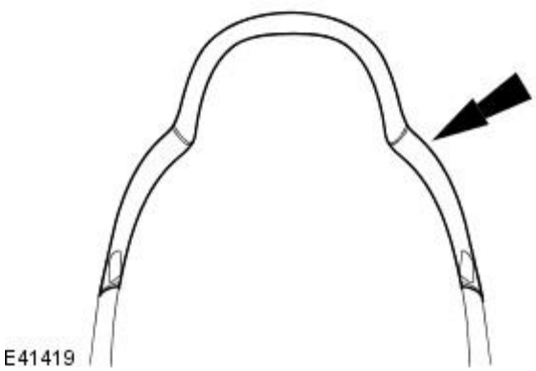

2. Detach the front seat backrest cover rear upper retaining clips.

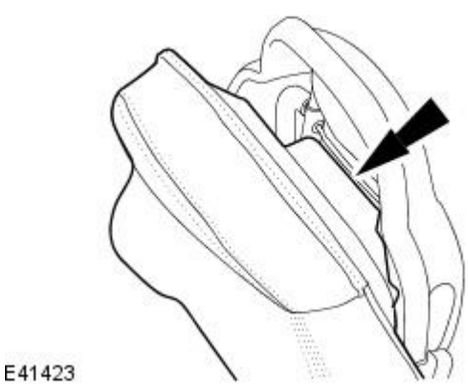

3. Using a suitable knife, detach the front seat backrest cover from the front seat frame.

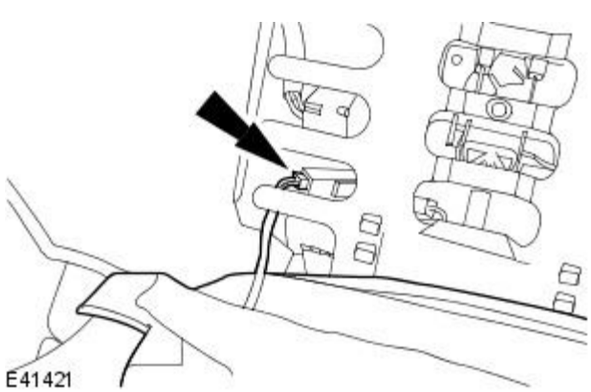

4. Remove the front seat backrest.

- Disconnect the front seat backrest heater mat electrical connector.

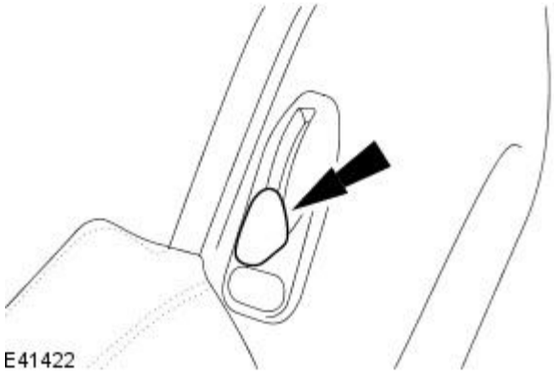

5. Remove the front seat tilt knob.

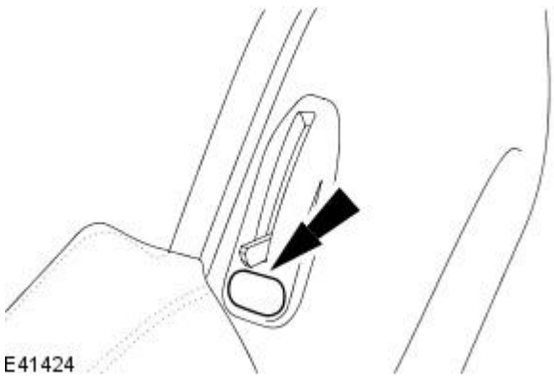

6. Remove the front seat tilt knob trim panel retaining screw trim cover.

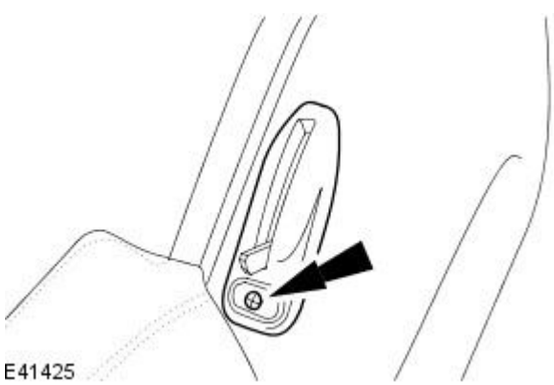

7. Remove the front seat tilt knob trim panel retaining screw.

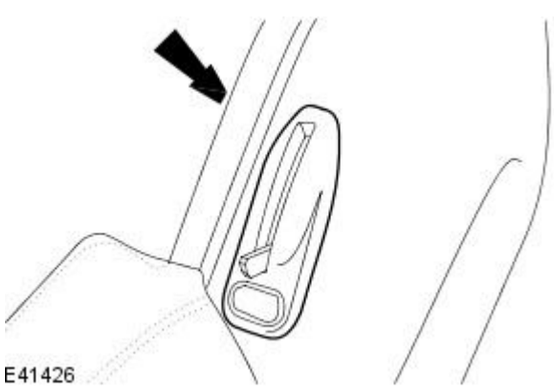

8. Remove the front seat tilt knob trim panel.

- Release the front seat tilt knob trim panel retaining tang from inside the front seat backrest frame.

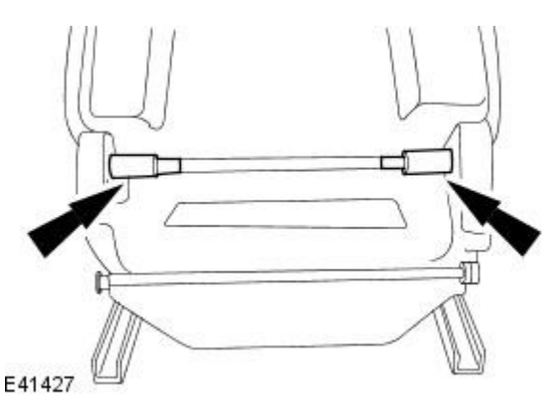

9. Detach the front seat backrest trim panel lower retaining clips.

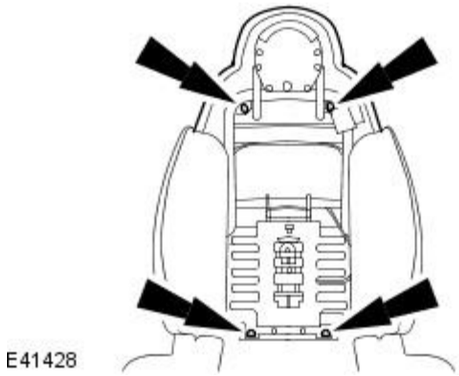

10. Remove the front seat backrest trim panel.

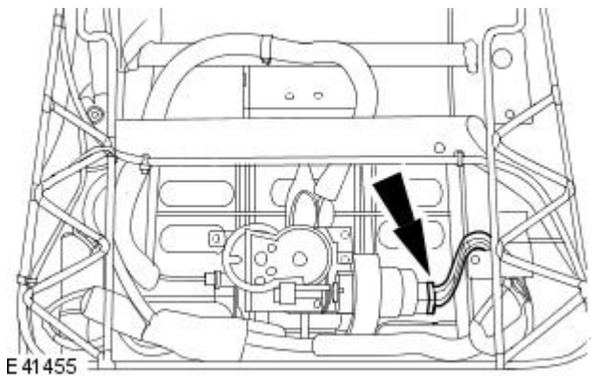

11. Disconnect the lumbar motor electrical connector.

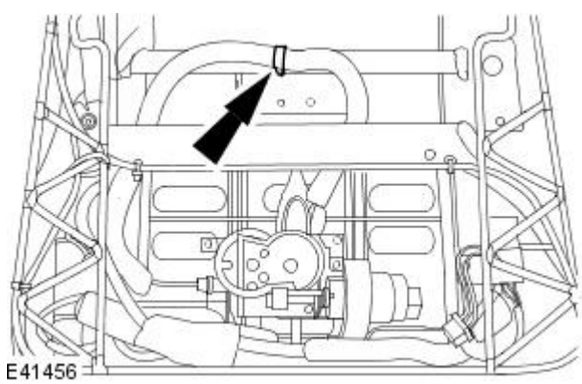

12. Remove and discard the lumbar motor wiring harness tie strap.

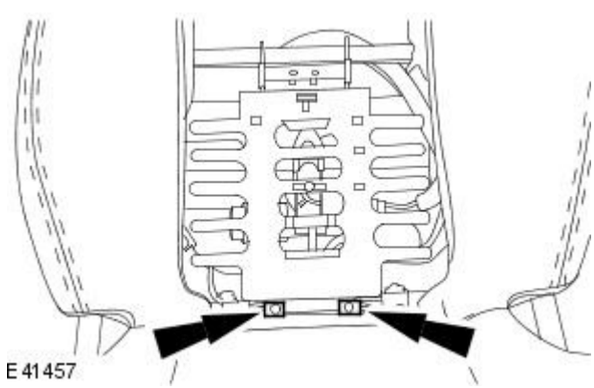

13. Remove the lumbar motor retaining screws.

- Remove the lumbar motor retaining screw clamps.

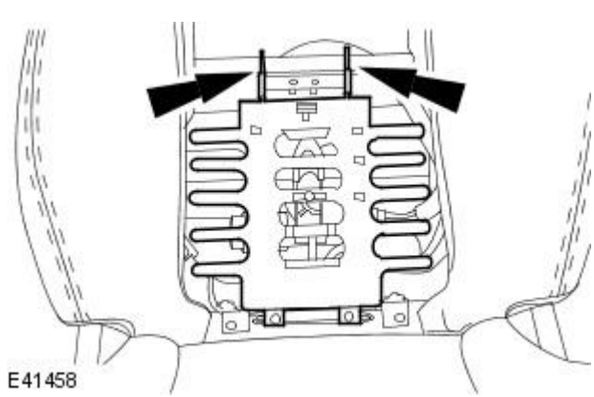

14. Remove the lumbar motor.

Installation

1. NOTE: Install a new tie strap.

To install, reverse the removal procedure.

Seating - Rear Seat Backrest

Removal and Installation

Removal

1. Remove rear seat cushion.
   For additional information, refer to Rear Seat Cushion - in this section.
2. Slacken and remove the two rear seat squab securing screws.

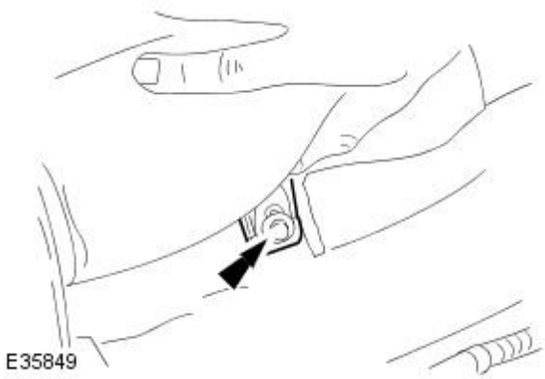

3. Move seat squab upwards to release body tangs.

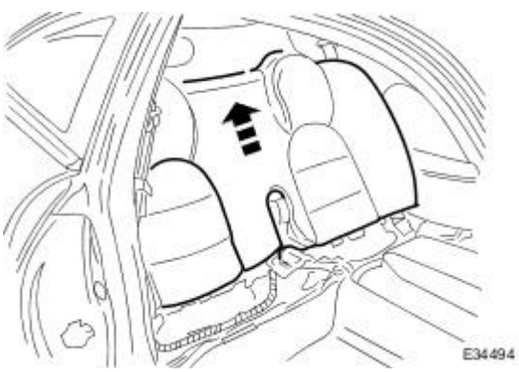

4. Position rear seat belts for access and remove squab from vehicle.

Installation

1. Position seat squab placing seat belts over.
2. Finally position squab, engaging body tangs by applying downward hand pressure.
3. Fit and tighten the two squab securing screws.
4. Fit rear seat cushion.
   For additional information, refer to Rear Seat Cushion - in this section.

Seating - Rear Seat Cushion

Removal and Installation

Removal

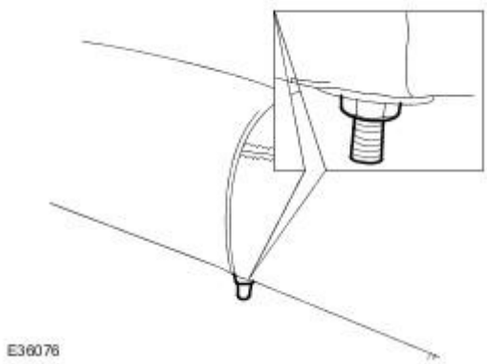

1. Using the rear passenger access knobs, position the back of each front seat fully forward.
2. Slacken and remove the two rear seat cushion securing nuts.

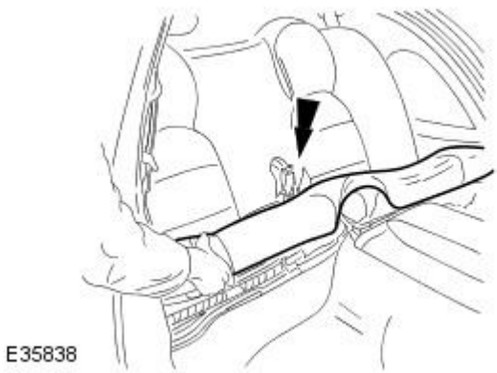

3. Raise seat cushion for access, pass seat belt anchors through central penetration and remove seat cushion from vehicle.

Installation

1. Position seat cushion for access and pass rear seat belt anchors through central penetration.
2. Finally position cushion and fit and tighten securing nuts.
3. Return front seat backs to the upright position.

Seating - Seat Control Switch

Removal and Installation

Removal

1. Disconnect the battery ground cable.
   For additional information, refer to Section 414-01 Battery, Mounting and Cables.
2. Detach the seat control switch.

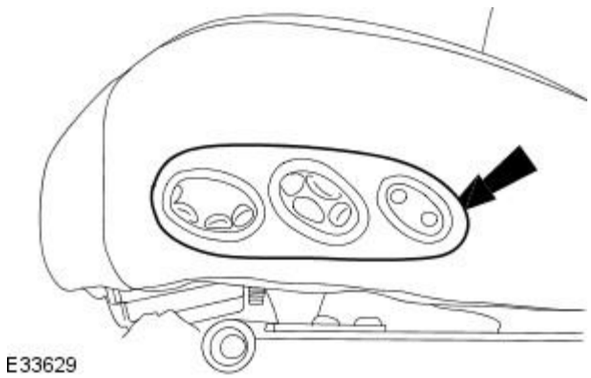

3. Remove the seat control switch.
   - Disconnect the seat control switch electrical connector.

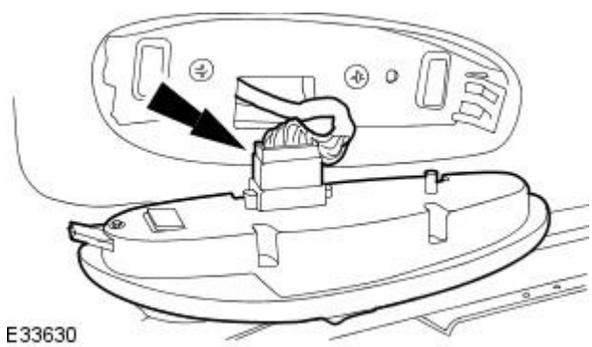

Installation

1. To install, reverse the removal procedure.

Glass, Frames and Mechanisms - Glass, Frames and Mechanisms

Description and Operation

Door Glass Operating Mechanism

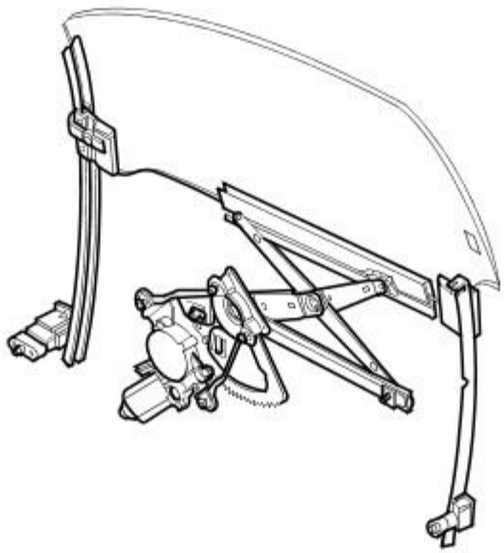

E36084

The windshield, which is of 5 mm laminated glass with a black obscuration band and has the interior mirror fitted, is common to the coupe and convertible. The windshield finisher is a one-piece, single color unit with seal. The backlight is 4 mm tempered glass, green tinted and heated. The windshield, backlight and quarter lights, except for the convertible model, are direct glazed to the body.

The windshield and coupe backlight are supplied as assemblies complete with trim which is secured to the glass by clips and is fully demountable when the assembly is bonded to the vehicle.

The convertible backlight and outer seal are conventionally glazed to the inner seal, which is stitched and bonded to the top. On both models, the heated backlight remains on for 21 minutes after being switched on unless it is manually switched off before the time delay expires. Some backlights are fitted with a security antenna. A fine wire heated windshield offered as an option on some markets, is controlled from the air conditioning panel.

The door glass on both models is a frameless system with 5 mm green tempered glass. The window glass is operated electrically and raised and lowered by a scissor mechanism.

Each door glass automatically drops 12 mm when the door is opened or when the convertible top is raised or lowered, closing when either the door is shut or the top is fully raised and latched in position. The door glass can be closed via the remote control unit. Glass operation is internally controlled from switchpacks located in the driver and passenger arm rests via the driver and passenger door modules. The switchpacks are illuminated when the sidelights are on.

One-touch up operation causes the door glass to fully close unless an object is detected or if the glass is already within 45 mm of top of travel when the door is opened. On detection of an object, the glass will drop fully open or to 200 mm below the obstruction. All door glass operates with the ignition switch in either position I or II and after ignition is switched off, until either door is opened.

Before commencing work within a door interior, all Warnings and Notes within the appropriate Removal and Installation procedures must be read and fully understood.

Rear Quarter Glass Operating Mechanism

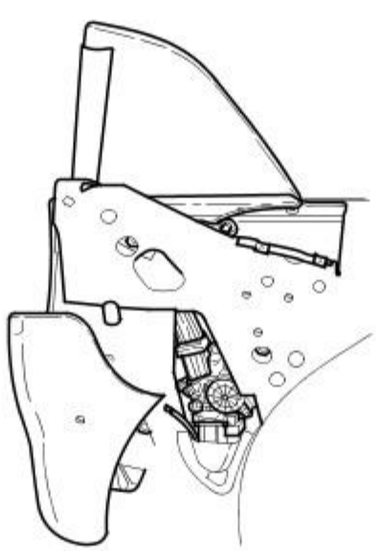

E36106

The coupe rear quarter glass is a fixed 4 mm, tempered, green-tinted unit direct glazed to the tonneau. The rear quarter glass of the convertible is 5 mm, tempered, semi-flush and green tinted. A drum and wire lowering and raising system provides automatic full glass drop when the top is lowered. Rear glass control is incorporated in the convertible top switch and operation of the rear quarters is as follows.

Raising with convertible top raised:

Activate by pressing and releasing the front of the switch.

Lowering with convertible top raised:

Press and release the rear part of the convertible top switch (one touch down).

When lowering the rear quarters at vehicle speeds up to 16 km/h (10 mph), failure to release the switch on operation of the audible alarm will result in lowering of the top.

Rear quarter glass is automatically powered to the bottom position when the top is lowered and further operation is inhibited until the top is raised and latched.

General Operation

The rear quarters are operated automatically up or down respectively when raising or lowering the convertible top. When the top is raised, with the door glass at the top of its travel, the glass will be powered down 12 mm and the rear quarters will be powered to the bottom of their travel. When the top is fully raised all glass will be powered up to close, forming a seal with the top.

If the front glass has been either fully or partially lowered manually, the rear quarters only will be powered up. If the power supply to the driver or passenger door module is disconnected (battery disconnected, module unplugged or fuse removed) then the glass/system must re-learn the glass operating characteristics. The last known glass position is regarded as top of travel by one touch operation until re-learning has taken place. One touch down, manual up and down control and the automatic lowering of the glass for door opening are unaffected.

To re-learn the glass operating characteristics, the associated door must be closed (door ajar switch inactive). The glass must then be driven fully down and held stalled at the bottom of its travel for a minimum of one second. The glass is finally driven to the fully up position and held stalled for a minimum of one second. The re-learning procedure must also be accomplished to regain the automatic glass closing sequence.

Glass, Frames and Mechanisms - Door Window Glass Adjustment

General Procedures

1. Turn ignition key to position II and motor door glass to fully lowered position.
2. Turn ignition key to position O
3. Remove door switchpack and door casing and disconnect switchpack harness multiplug. Refer to 76.34.01.
4. Remove door water shedders. Refer to 76.58.07.
5. Reconnect door glass lift switch lead to glass regulator connector.
6. Remove door outer waist moulding. Refer to 76.43.04.
7. Using a felt tip pen mark datum lines on glass.
   - Draw a horizontal line across glass 6mm from the top edge on coupe or 9mm down on convertible.
   - Draw a parallel line 6mm from glass leading edge.

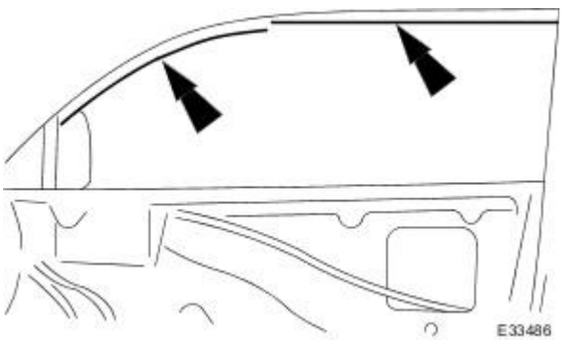

WARNING: THE FOLLOWING STEPS NECESSITATE WORKING IN THE DOOR INTERIOR WITH THE POWER SUPPLIES CONNECTED. TO AVOID INADVERTENT GLASS OPERATION AND POSSIBLE INJURY, NO OTHER WORK MUST BE CARRIED OUT SIMULTANEOUSLY.

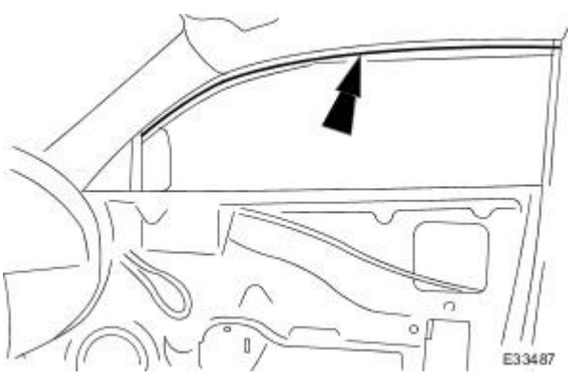

8. Turn ignition key to position II and motor door glass up until top edge is just below upper seal.

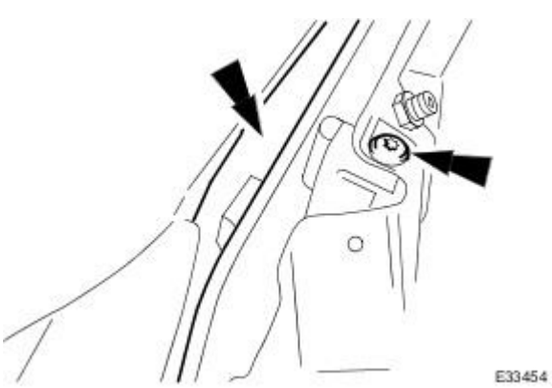

9. Adjust gap between glass and outer waist rail flange.
   - Slacken rear guide upper securing screw
   - Move guide to achieve a gap of 9mm and tighten securing screw.

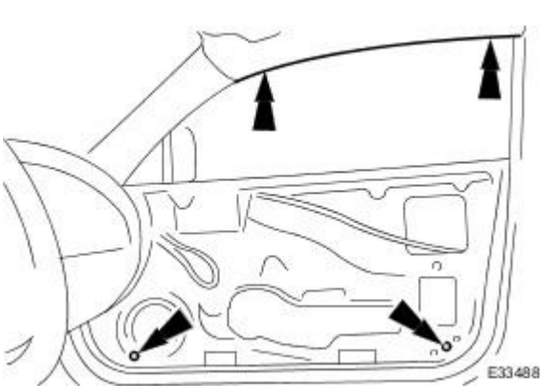

10. Using guide runner lower adjusters, laterally align glass top edge with the upper seal.

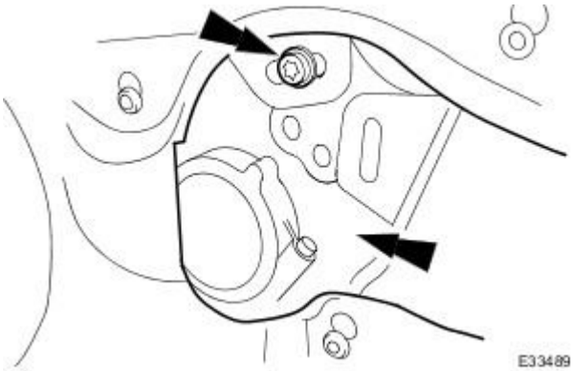

11. Remove tape from access hole in PVC secondary water shedder and slacken glass regulator stop adjuster bolt.

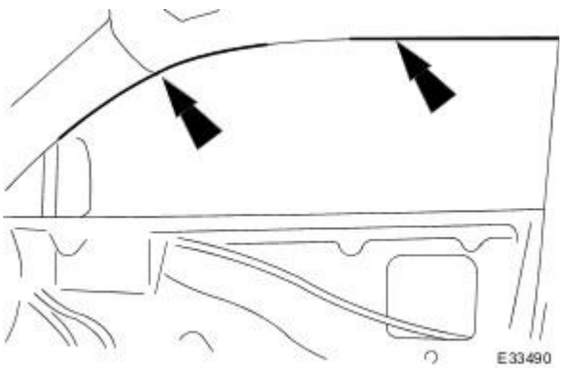

12. Motor door glass further up until the horizontal datum line aligns with the upper seal.

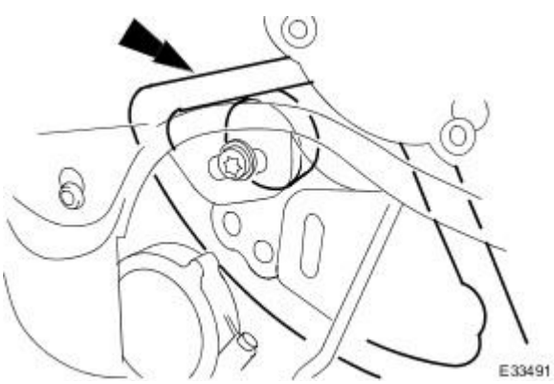

13. Move glass regulator stop to abut quadrant and tighten adjuster bolt.

14. Motor door glass to fully up position, measure any lift adjustment required and re-mark glass in that position.

15. Motor door glass to partially lowered position.

16. Slacken glass regulator stop adjuster bolt, move stop required amount and tighten bolt.

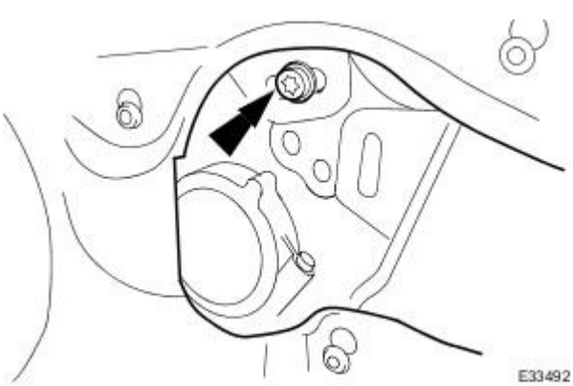

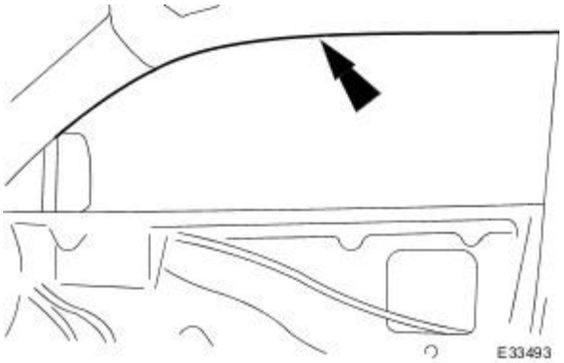

17. Motor door glass to fully raised position and check glass seating in upper seal.

18. Repeat operations 14 to 17 as necessary, until door glass seats satisfactorily in upper seal.

19. With glass in fully raised position, slacken door waist adjuster lock nuts and hand screw adjusters in until they abut the door glass stops.

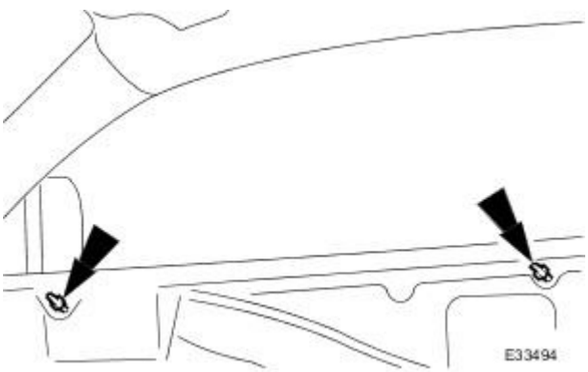

20. Adjust gap for parallelism between rear edge of door glass and front edge of quarter light.

- Slacken glass lift regulator channel adjuster lock nut.
- Move channel to achieve a parallel gap of 8mm on coupe model, 11mm on convertible.
- Tighten lock nut.

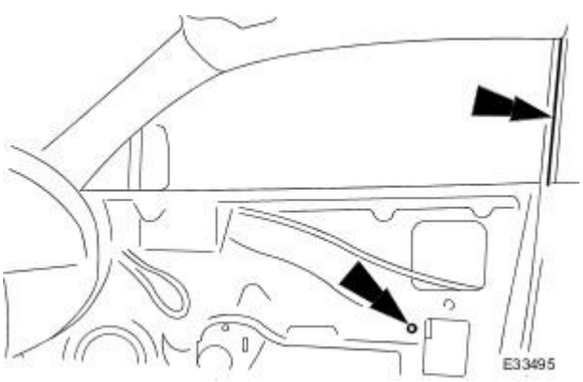

21. Motor door glass fully down and fully up and check all gaps and alignments.

22. Turn ignition key to position O.

23. Disconnect and remove door glass lift switch.

24. Thoroughly clean door glass, removing datum marker lines.

25. Fit door outer waist moulding.

26. Fit new tape to access hole in PVC secondary water shedder

27. Fit water shedders. Refer to 76.58.07.

28. Fit door switchpack to door casing, connect multiplug and fit casing. Refer to 76.34.01.

Glass, Frames and Mechanisms - Automatic Window Control Switch

Removal and Installation

Removal

1. Turn ignition key to position II.
2. Motor door glass to fully raised position.
3. Turn ignition key to position O.
4. Remove battery cover and disconnect ground cable from battery terminal. Refer to 86.15.15.
5. Remove door casing for access. Refer to 76.34.01.
6. Remove door primary water shedder. Refer to 76.58.07.
7. Position PVC secondary water shedder for access.
8. Remove door latch assembly from vehicle. Refer to 86.65.16.
9. Slacken and remove latch assembly cover securing screw.

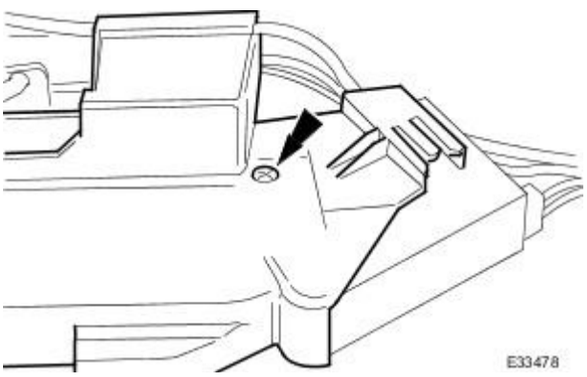

10. Release cover to latch inner locating boss and remove cover.

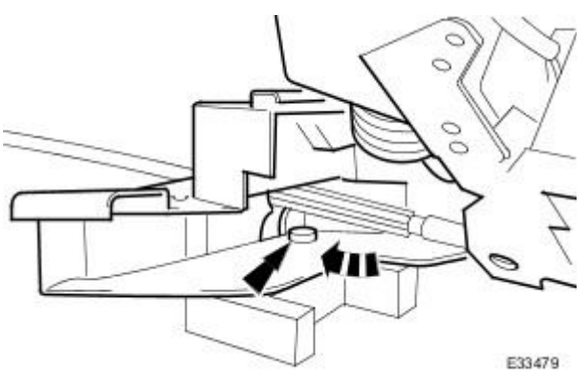

11. Release door glass drop switch securing tangs and remove switch from latch assembly.

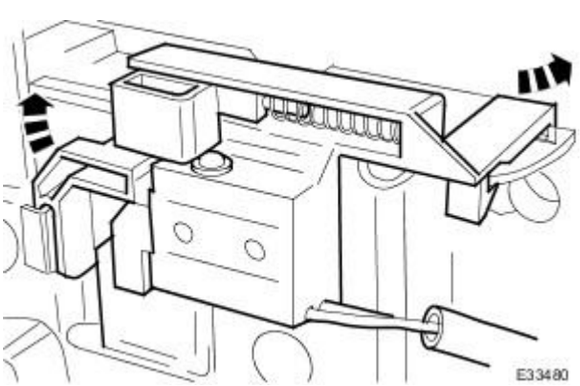

12. Remove and discard switch harness securing tape
13. Remove harness multiplug pin protector and using special tool MS.1540, release switch terminal pins from multipug.

Installation

1. Fit and fully seat switch terminal pins in harness multiplug and fit terminal pin protector.

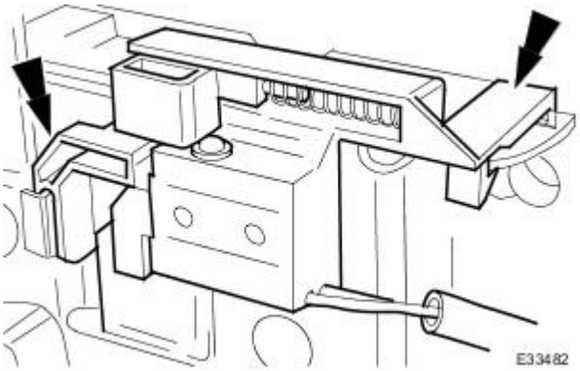

2. Fit door glass drop switch to latch assembly, ensuring that both tangs are fully seated.

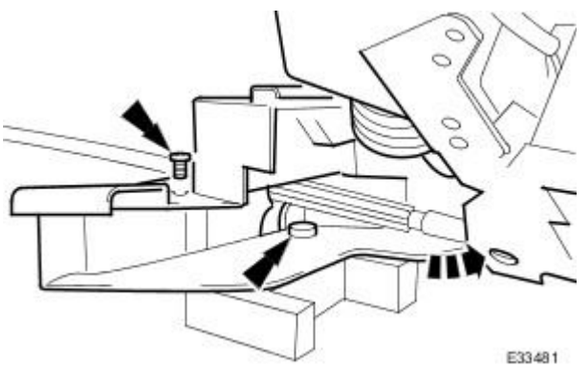

3. Secure switch harness with suitable tape.
4. Fit cover to latch assembly.
   - Position cover over latch assembly, ensuring that internal boss locates correctly in latch housing.
   - Fit and tighten cover securing screw.
5. Fit latch assembly to door. Refer to 86.65.16.
6. Connect ground cable to battery terminal and fit battery cover. Refer to 86.15.15.

Glass, Frames and Mechanisms - Door Window Glass

Removal and Installation

Removal

1. With door open, turn ignition key to position II.
2. Motor door glass to fully raised position.
3. Turn ignition key to position O.
4. Remove battery cover and disconnect ground cable from battery terminal.
5. Remove door casing for access. Refer to 76.34.01.
6. Remove speaker. Refer to 86.50.13.
7. Remove main water shedder and position secondary shedder clear of regulator assembly. Refer to 76.58.07.
8. Slacken and remove glass rear guide runner upper retaining screw.

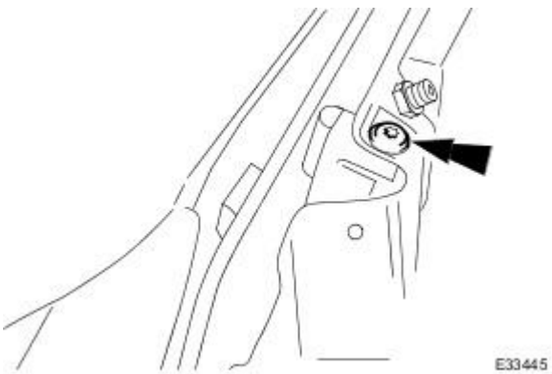

9. Slacken and remove rear guide runner lower adjuster and securing screws and position guide runner clear of glass guide.

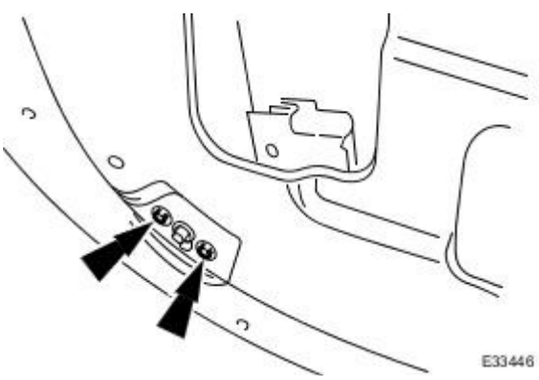

10. Reconnect door glass operating switch.
11. Connect ground cable to battery terminal. Refer to 86.15.15.
12. Motor door glass to 50mm from bottom position.
13. Remove ground cable from battery terminal. Refer to 86.15.15.
14. Remove door inner waist seal. Refer to 76.31.55.
15. Remove door outer waist rail moulding. Refer to 76.43.04.
16. Slacken and remove screw securing door glass guide to front guide runner retaining bracket and remove bracket.

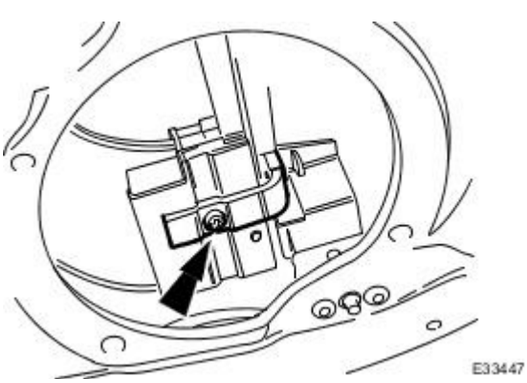

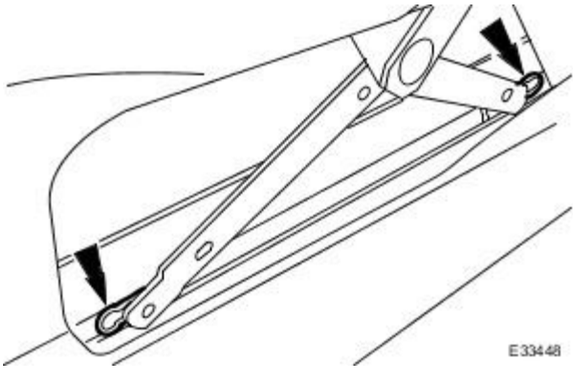

17. Remove clips from nylon fixings and retain for re-use.

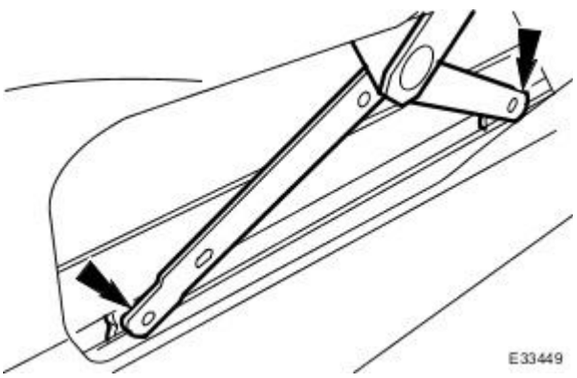

18. Release glass regulator assembly from nylon fixings.

19. Lift glass upwards, tilt rear end outwards pass upwards between top adjuster screws and remove glass from door.

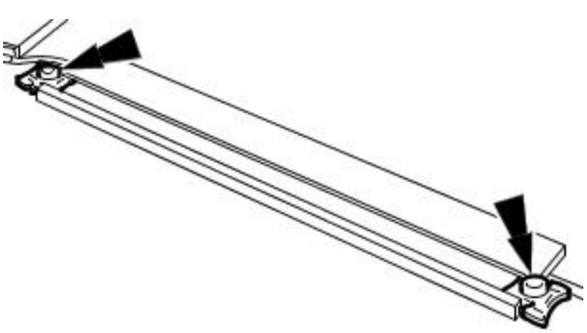

20. Remove nylon fixings from lower channel and refit clips to fixings.

Installation

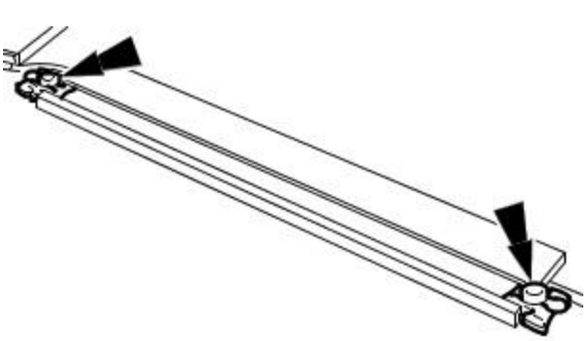

1. Lubricate glass lower channel and fit nylon fixings ensuring that looped ends of clips face outwards.

2. Position glass in door aperture and fit front guide onto guide runner.

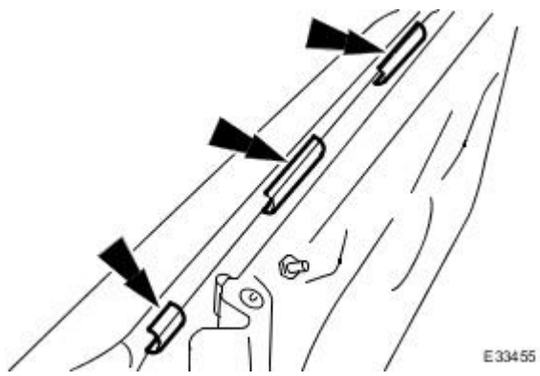

3. Check that the three buffers are fitted to outer waist reinforcer.

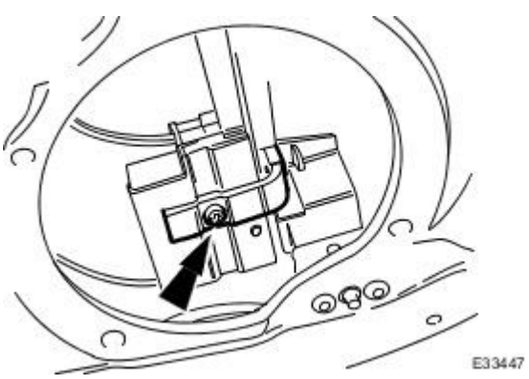

4. Fit and align glass front guide retaining bracket and tighten securing screw.

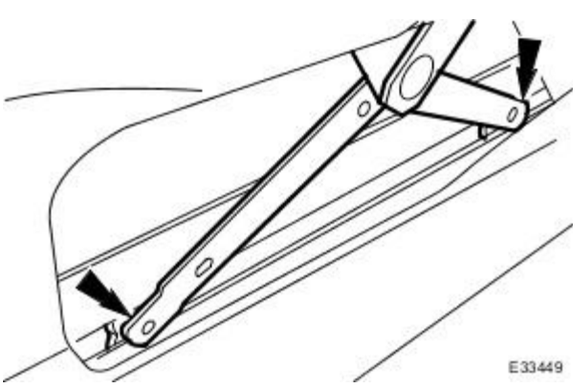

5. Fit glass regulator assembly onto nylon fixings and fit and fully seat retaining clips.

6. Connect ground cable to battery terminal. Refer to 86.15.15.

7. Motor glass to 25mm from fully raised position

8. Disconnect ground cable from battery terminal.

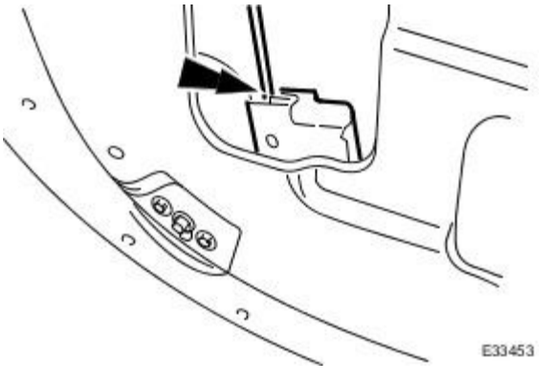

9. Fit rear guide runner to glass guide.

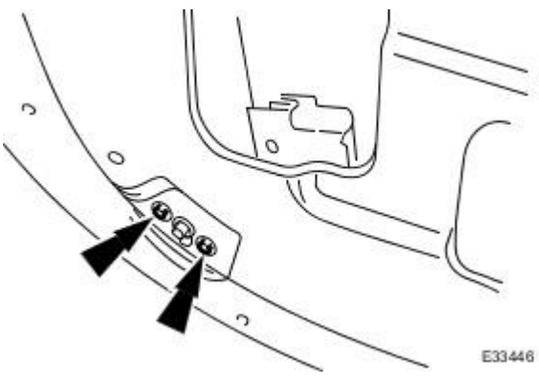

10. Fit and tighten rear guide runner adjuster securing screws.

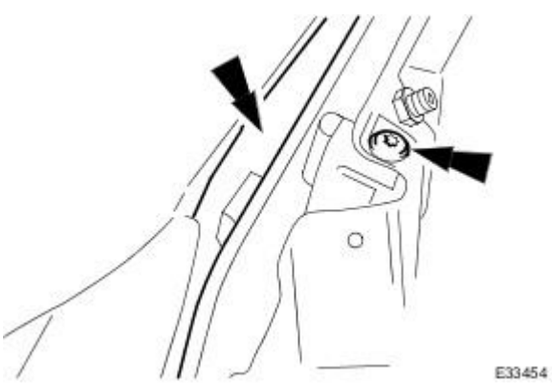

11. Fit and tighten rear guide runner upper securing screw ensuring that a clearance of 9mm is maintained between glass and outer waist rail flange inner face.

12. Fit ground cable to battery terminal and fit battery cover. Refer to 86.15.15.

13. Motor glass to fully lowered position.

14. Disconnect and remove door switchpack.

15. Fit door outer waist rail moulding. Refer to 76.43.04.

16. Fit door inner waist seal. Refer to 76.31.55.

17. Adjust door glass as required. Refer to 76.31.03.

18. Fit speaker. Refer to 86.50.13.

19. Fit secondary and main water shedders. Refer to 76.58.07

20. Fit door casing. Refer to 76.34.01.

Glass, Frames and Mechanisms - Door Window Glass Weatherstrip

Removal and Installation

Removal

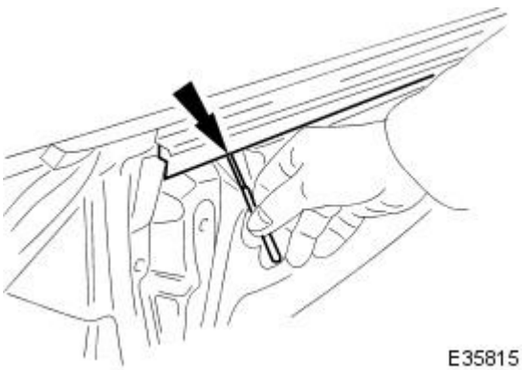

1. Remove door casing for access. Refer to 76.34.01.
2. Commencing at door release button recess, carefully use a thin blade to ease inner waist seal from rear of door waist flange.
3. Working from rear, and exercising care toavoid distortion, progressively remove seal from waist flange.

Installation

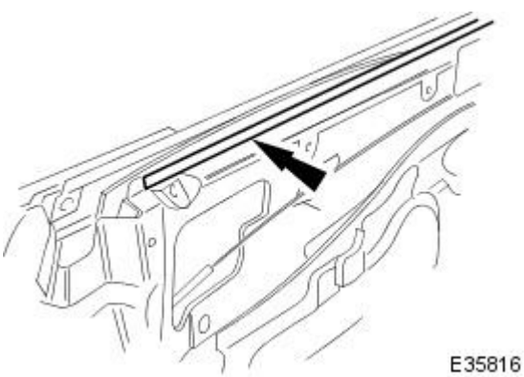

1. Ensure that top edge of PVC water shedder is correctly positioned on door waist flange.

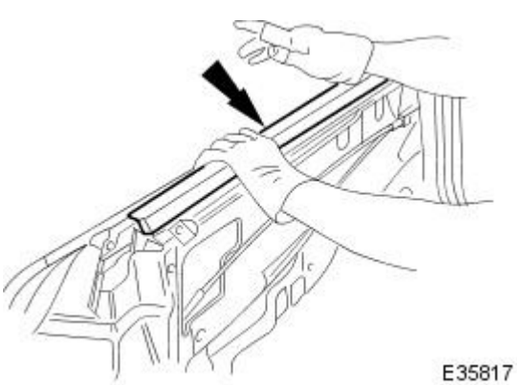

2. Commencing at front and ensuring that end of seal aligns with front of door waist flange,fit and fully seat seal on door.
3. Fit door casing. Refer to 76.34.01.

Glass, Frames and Mechanisms - Door Window Glass WeatherstripConvertible

Removal and Installation

Removal

1. Partially lower convertible top.
2. Remove two screws securing front of seal to header rail.

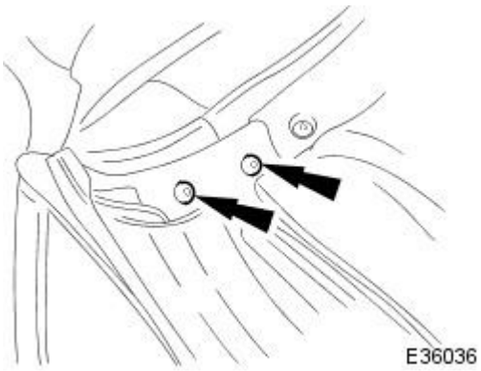

3. Remove seal from carrier.

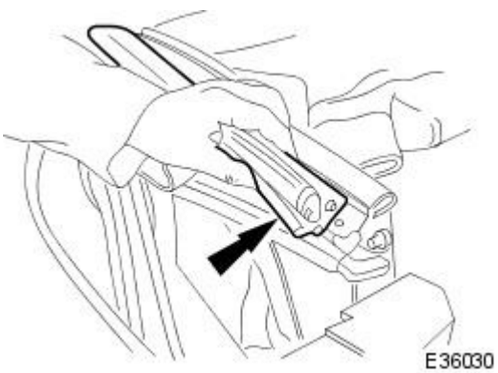

4. Clean carrier seal locating channel and apply a thin film of Johnson KY Jelly or equivalent.

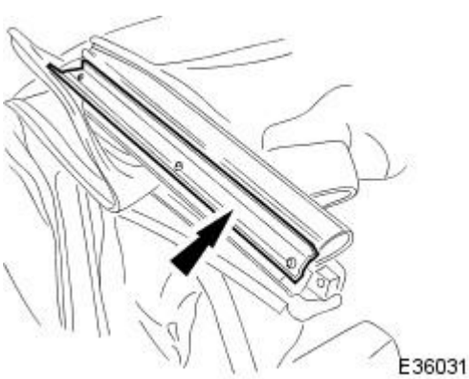

Installation

1. Install seal in carrier channel ensuring it is fully seated.
2. Install two screws securing front of seal to header rail
3. Fully raise convertible top and align seal to abut frame rear seal.

Glass, Frames and Mechanisms - Door Window Regulator Motor

Removal and Installation

Removal

1. With door open, turn ignition key to position II.
2. Motor door glass to fully lowered position.
3. Turn ignition key to position O.
4. Remove battery cover and disconnect ground cable from battery terminal.
5. Remove door casing for access. Refer to 76.34.01.
6. Remove speaker. Refer to 86.50.13.
7. Remove main water shedder and position secondary shedder clear of regulator assembly. Refer to 76.58.07.
8. Remove clips from nylon fixings and retain for re-use.

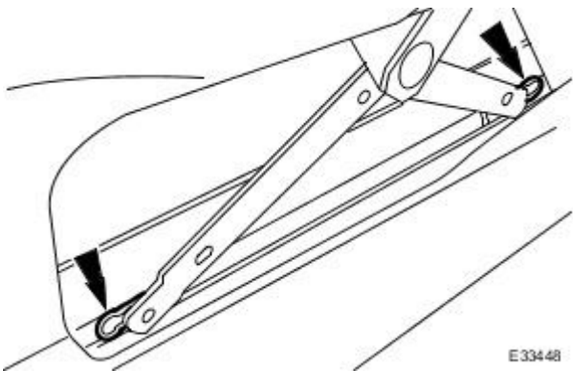

9. Release glass regulator assembly from nylon fixings.

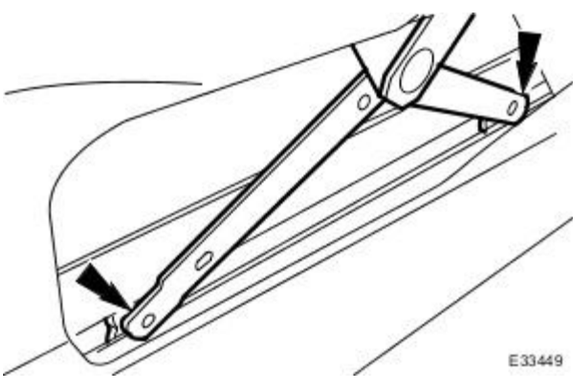

10. Manually raise glass to uppermost position and using linen or similarly strong tape, secure glass to top of door.

11. Accessing via speaker aperture, disconnect harness multiplug from lift motor.

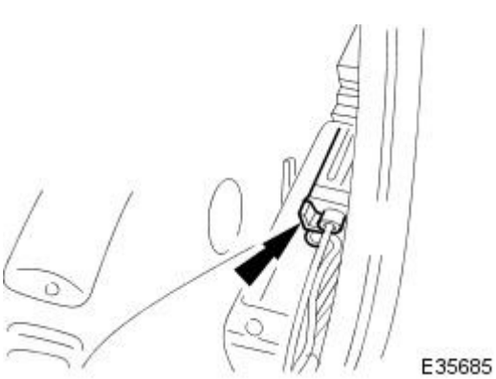

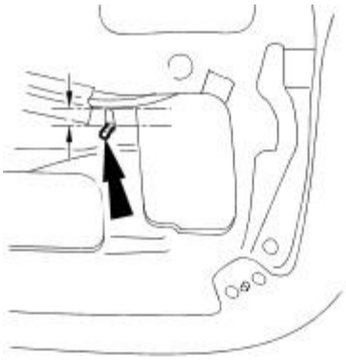

12. NOTE: The position of this stud is critical to glass alignment and must be measured accurately.

Using vernier calipers, measure position of regulator channel securing stud in elongated hole and slacken and remove nut.

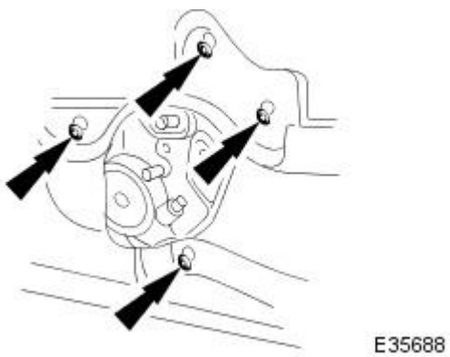

13. Slacken and remove screws securing lift motor to door.

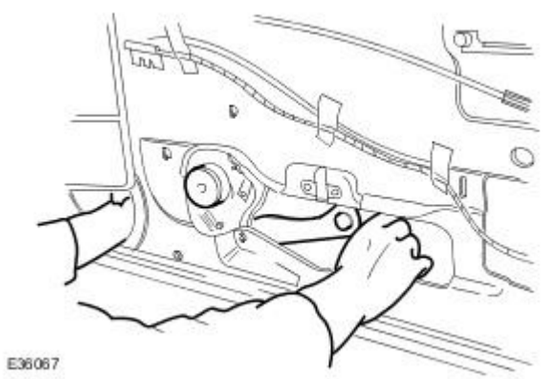

14. Lower motor/regulator assembly into bottom of door and close scissor mechanism.

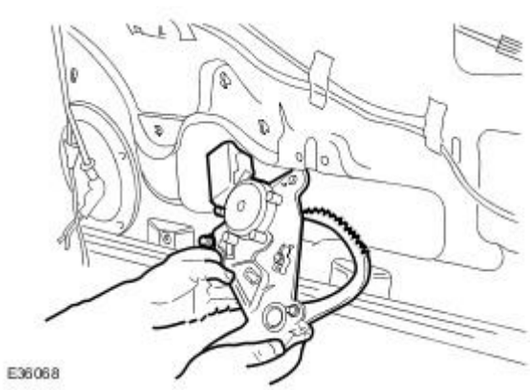

15. Turning it to achieve clearance, withdraw motor/regulator assembly through door aperture.

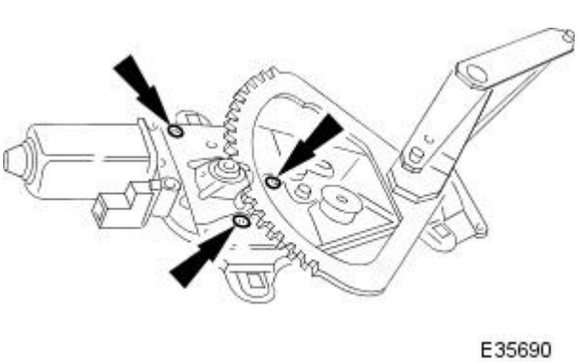

16. Place assembly on bench, slacken and remove screws securing lift motor to regulator and remove motor.

Installation

1. Position lift motor on regulator assembly and fit and tighten securing screws.
2. Close scissor mechanism and pass assembly through aperture into door.
3. Position motor/regulator assembly in door.
4. Fit but do not tighten motor to door securing screws and regulator channel securing nut.

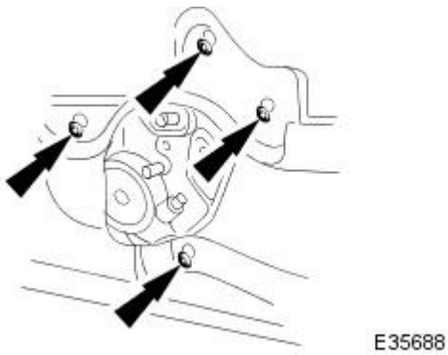

5. NOTE: Accurate positioning of this stud is critical to glass alignment.

   Position regulator channel securing stud in elongated hole as measured during removal and fit and fully tighten securing nut.

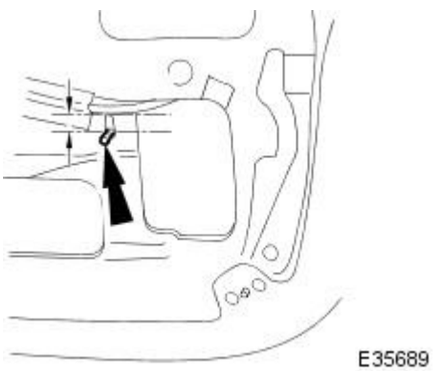

6. Fully tighten motor to door securing screws.
7. Supporting door glass, remove linen tape and lower glass onto regulator assembly.
8. Press regulator ball joints into nylon seats on lower channel and fit retaining clips.
9. Connect harness multiplug to motor.
10. Position speaker in door and connect harness multiplug.
11. Align speaker and new gasket in door and fit and tighten securing screws.
12. Fit door casing. Refer to 76.34.01.

Glass, Frames and Mechanisms - Driver Door Window Control Switch

Removal and Installation

Removal

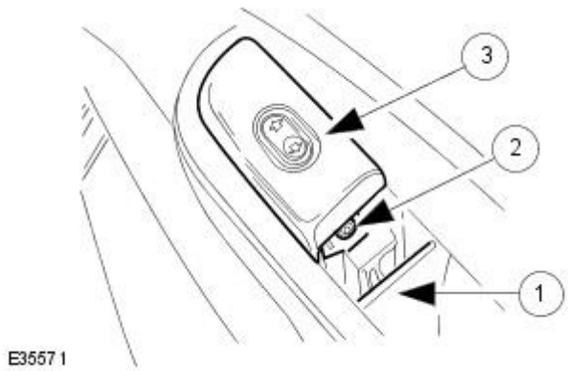

1. Remove battery cover and disconnect ground cable from battery terminal.
2. Remove glass lift switch.
    1. Remove glass lift switch end cover trim pad.
    2. Slacken and remove the switch securing screw.
3. Disconnect the switch harness multiplug.
4. If the switch is to be renewed, remove the veneer panel from clips.

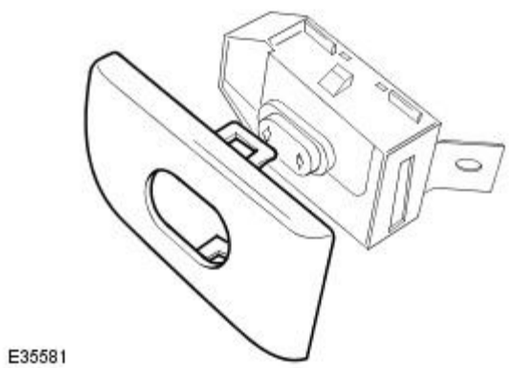

Installation

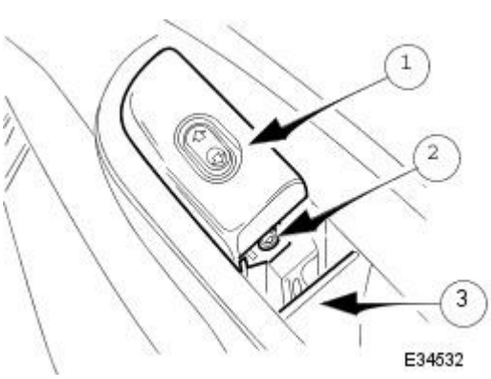

1. If switch has been renewed, fit and fully seat veneer panel in retaining clips.
2. Connect harness multiplug to switch.
    1. Position glass lift switch in door.
    2. Fit and tighten switch securing screw.
    3. Fit and fully seat switch end cover trim pad.
3. Connect ground cable to battery terminal and fit battery cover. Refer to 86.15.15.

Glass, Frames and Mechanisms - Passenger Door Window Control Switch

Removal and Installation

Removal

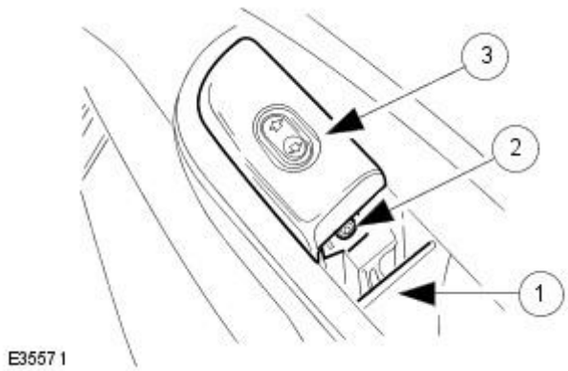

1. Remove battery cover and disconnect ground cable from battery terminal.
2. Remove glass lift switch.
    1. Remove glass lift switch end cover trim pad.
    2. Slacken and remove the switch securing screw.
3. Disconnect the switch harness multiplug.
4. If the switch is to be renewed, remove the veneer panel from clips.

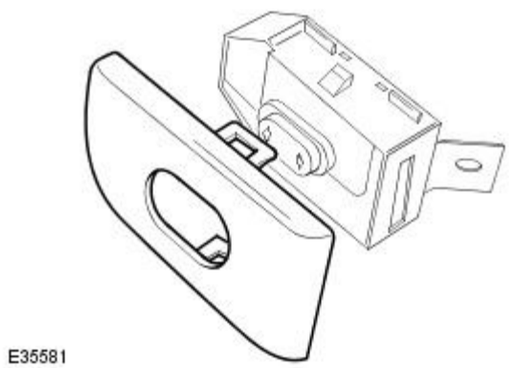

Installation

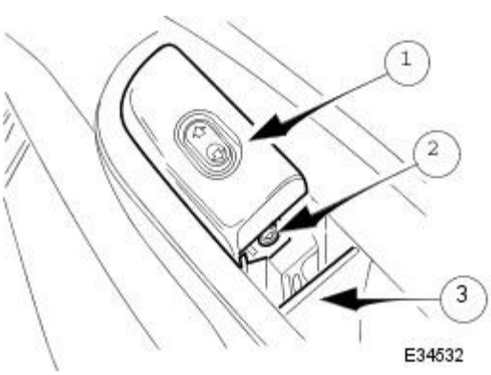

1. If switch has been renewed, fit and fully seat veneer panel in retaining clips.
2. Connect harness multiplug to switch.
3. Fit glass lift switch.
    1. Position glass lift switch in door.
    2. Fit and tighten switch securing screw.
    3. Fit and fully seat switch end cover trim pad.
4. Connect ground cable to battery terminal and fit battery cover. Refer to 86.15.15.

Glass, Frames and Mechanisms - Rear Quarter Window Glass

Removal and Installation

Removal

1. Remove rear seat cushion and squab. Refer to 76.70.37 and 76.70.38.
2. Remove coat hanger hook.
3. Remove rear quarter casing. Refer to 76.13.73.
4. Displace door aperture seal from B post seal carrier and drip rail seal carrier. Refer to 76.40.30.
5. Remove rear quarter light finisher and drip rail seal carrier. Refer to 76.43.81.
6. Slacken and remove three screws securing B post seal carrier to B post and remove carrier.

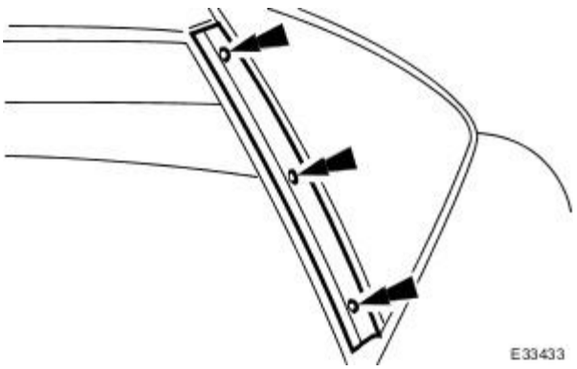

7. Apply protective masking tape around quarter light aperture.

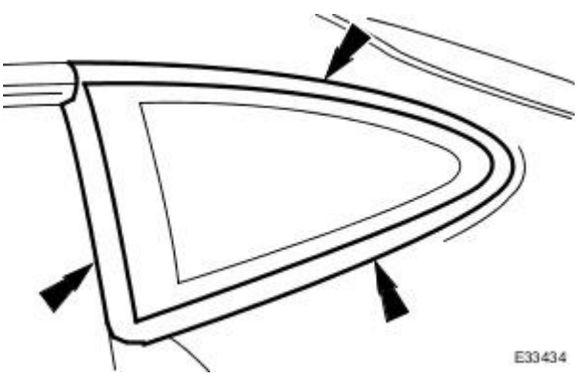

8. Prepare cheese wire and cutting handle.
   - Position cutting handle central tube fully upwards in handle.
   - Cut a suitable length of cheese wire and pass one end through handle tube and locating aperture.
   - Move cutting handle central tube fully downwards to secure cheese wire.

9. NOTE: Penetrating the seal in the wrong position can result in contact with the glass to body mounting stud.

   Using a suitable long bladed tool, penetrate quarter light Betaseal at B post three inches from top of glass.

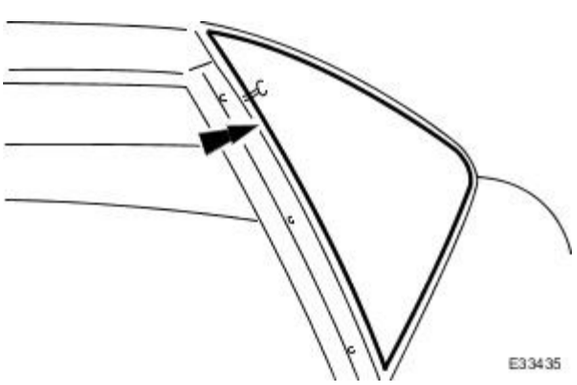

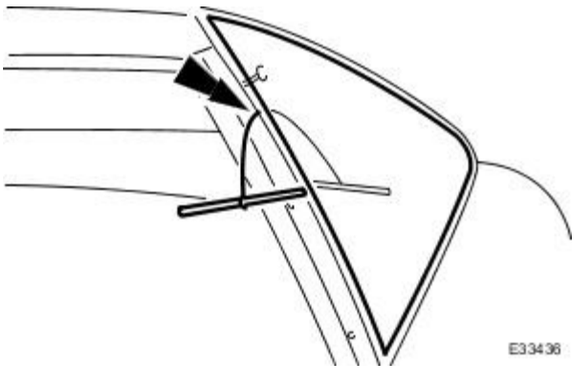

10. Remove tool, pass free end of cheese wire through penetration and fit second cutting handle.

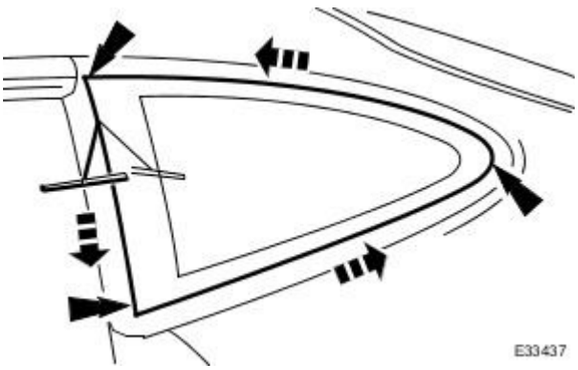

11. With assistance, use cheese wire to cut around the glass moving downwards then rearwards and exercising care to avoid damaging paintwork at the corners.

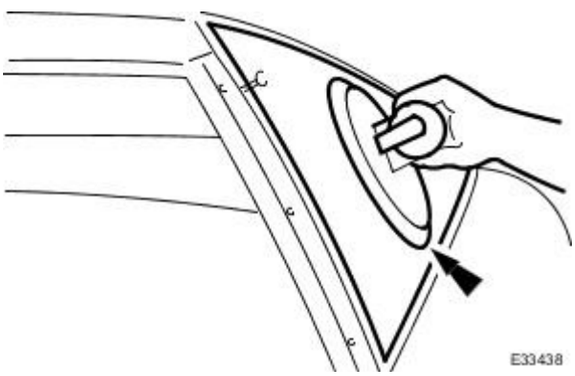

12. Fit lifting handle to glass and ease upper edge away from aperture for access.

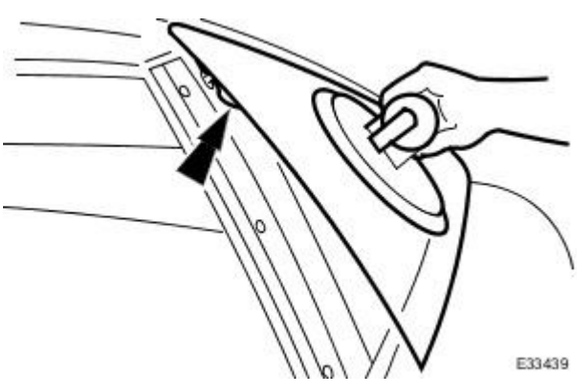

13. Supporting the glass, use a suitable cutter to sever remaining Betaseal.

14. Remove glass from aperture and place on clean cloth on bench.

15. Remove lifting handle.

16. Remove cheese wire cutting tool from vehicle, separate handles by moving centre tubes upwards and discard cheese wire.

17. Position a protective sheet inside the vehicle.

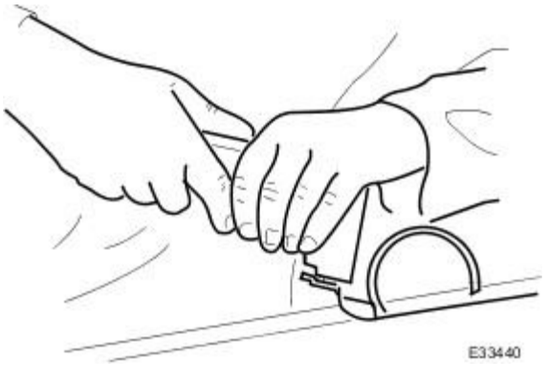

18. Ensuring that the paintwork is not damaged, use a suitable vibroknife to remove residual sealant from body flange.

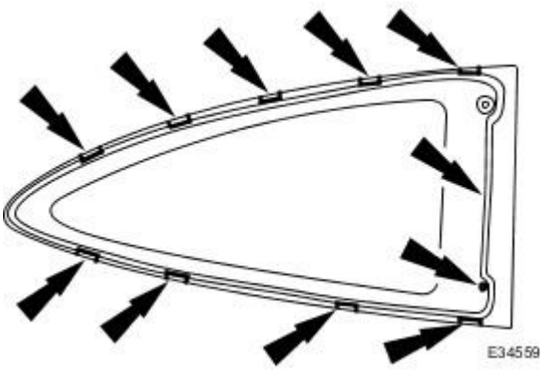

19. If original glass is to be refitted.

- Use masking tape to mark finisher retaining clip positions on outside of glass then remove and retain clips.
- Remove residual Betaseal using a suitable scraper.
- Clean glass using Betawipe and refit finisher retaining clips.
- Remove masking tape markers.

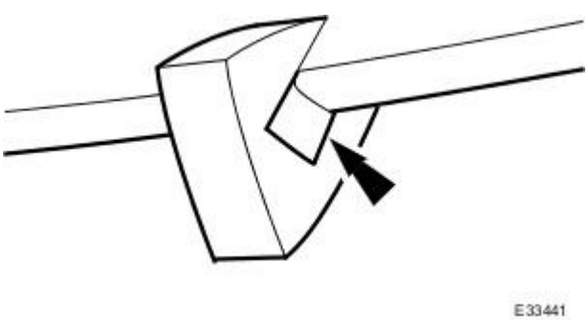

20. If 3mm thick button or spacer block become detached, retain and refit before priming.

- When refitting spacing block, apply suitable adhesive and fit block to glass edge maintaining a 2mm clearance between glass and bottom of block groove.

Installation

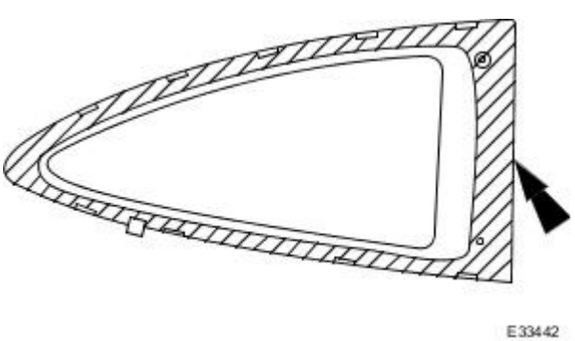

1. Thoroughly clean glass and body aperture with Betawipe spirit.

2. Apply glass primer ensuring that it is taken right up to the radiused front edge.

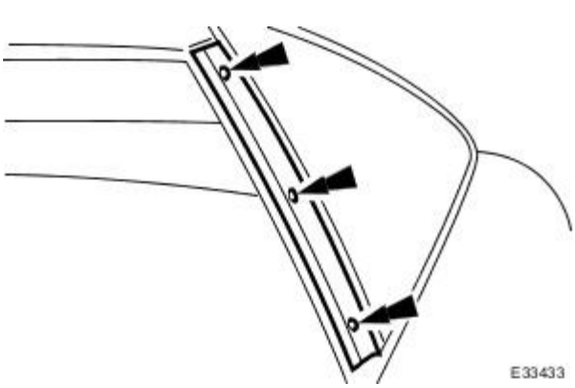

3. Position seal carrier on B post and fit and tighten securing screws.

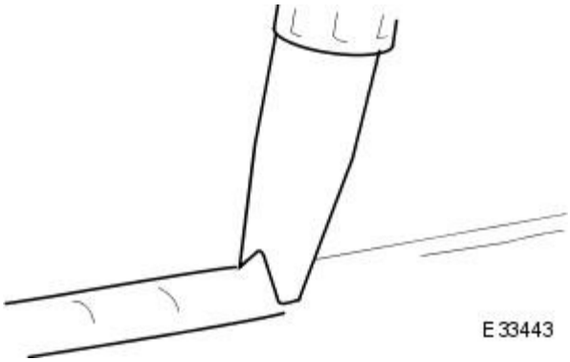

4. Cut Betaseal cartridge nozzle to achieve a triangular section bead 8mm wide by 10mm high.

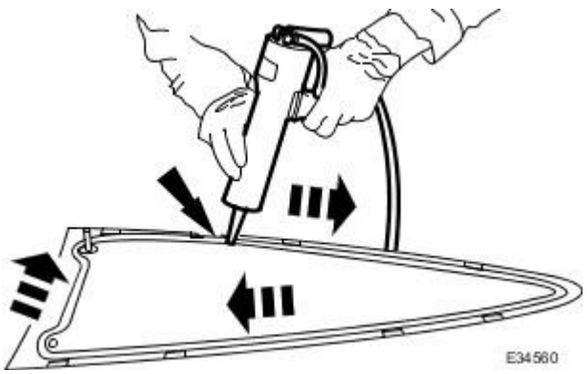

5. Using a suitable pneumatic application gun, apply a uniform bead of sealant to the glass edge.

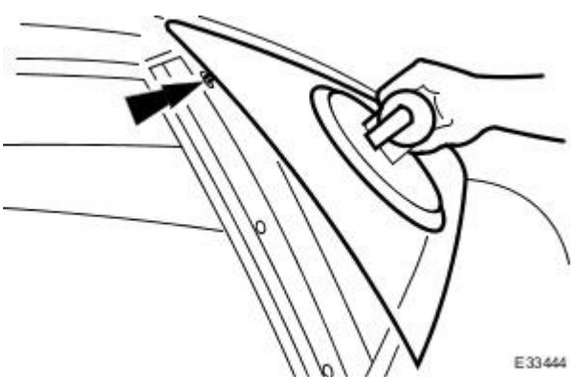

6. Fit lifting handle to glass. Align glass to body, ensuring that location stud engages in body clip and press glass firmly to fully seat.

7. Remove lifting handle, remove masking tape and clean off residual sealant using Betawipe spirit.

8. Fit quarter light finisher, maintaining 4mm clearance from waist seal finisher. Refer to 76.43.81.

9. Fit drip rail seal carrier.

- Position drip rail seal carrier pressing it back to abut the quarter light finisher.
- Loosely fit carrier securing screws then tighten them commencing from the rear.

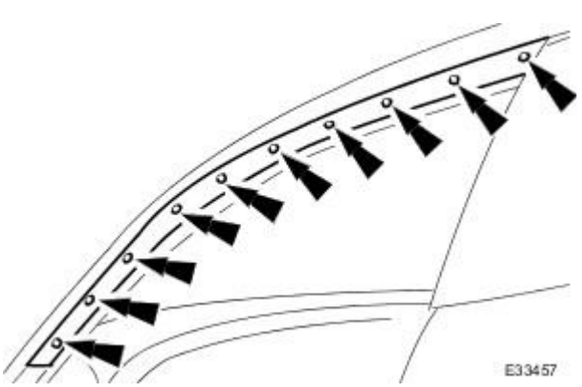

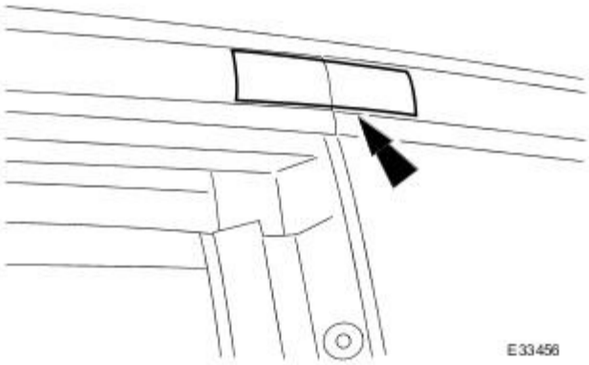

10. Apply wet sealant behind finishers butt joint between the two adjacent screw locations.

11. Fit door aperture seal. Refer to 76.40.30.

12. Remove protective sheet from interior.

13. Fit rear quarter casing. Refer to 76.13.73.

14. Fit rear coat hanger hook.

15. Fit rear seat cushion and squab. Refer to 76.70.37 and 76.70.38.

Glass, Frames and Mechanisms - Rear Quarter Window Glass WeatherstripConvertible

Removal and Installation

Removal

1. Fully lower converible top.
2. Remove rear quarter capping.
   1. Remove fastener securing rear quarter capping to 'B' post extension.
   2. Slacken and remove three screws securing the capping,

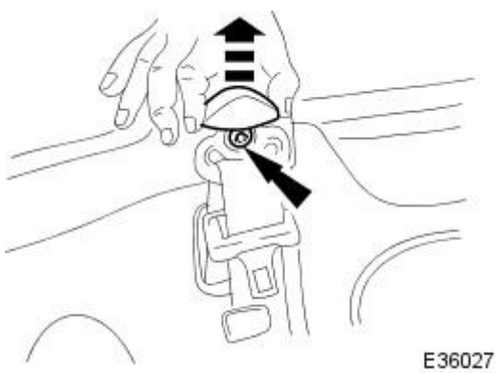

3. Remove seat belt upper mounting bolt.
   - Remove seat belt upper mounting bolt cover.
   - Remove seat belt upper mounting bolt.

4. Lift rear quarter capping clear and remove from vehicle.
5. Remove four fir tree fasteners securing front of seal.

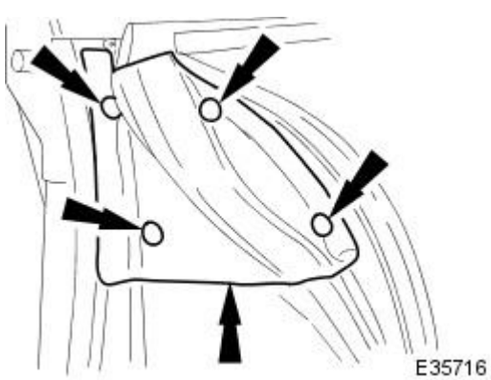

6. Remove screw securing rear of seal.

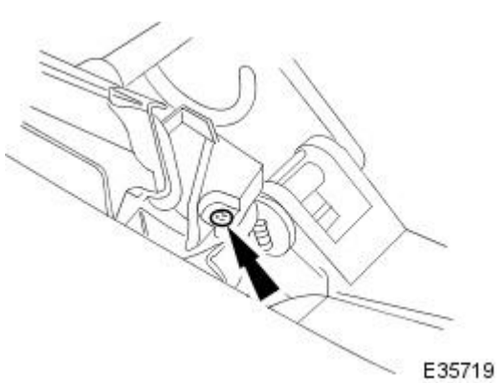

7. Clean seal carrier channel.

Installation

1. Apply a thin coat of Johnson KY Jelly or equivalent to carrier channel.
2. Install seal in carrier ensuring it is fully seated in channel.
3. Install fir tree fasteners at front of seal.
4. Install screw at rear of seal.
5. Position rear quarter capping and install screws.
6. Install seat belt upper bolt and tighten to 34-46Nm.
7. Install cover over seat belt upper bolt.

Glass, Frames and Mechanisms - Rear Quarter Window Glass Lower Weatherstrip

Removal and Installation

Removal

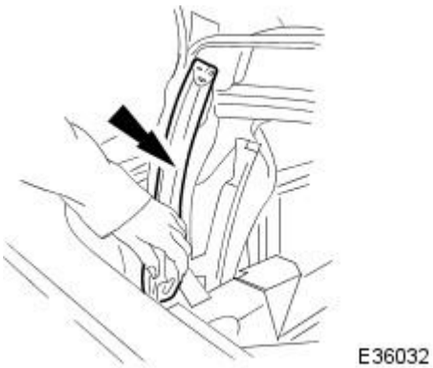

1. Partially lower convertible top.
2. Remove seal from carrier.

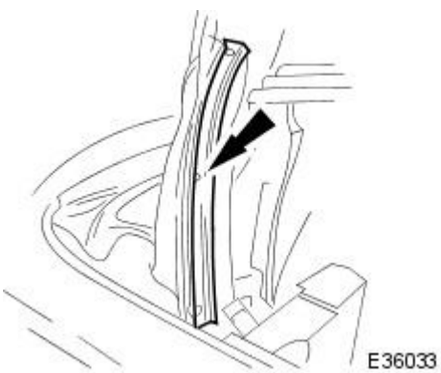

3. Clean carrier seal locating channel and apply a thin film of Johnson KY Jelly or equivalent.

Installation

1. Install seal in carrier channel ensuring it is fully seated.
2. Fully raise convertible top and align seal to abut frame rear seal.

Glass, Frames and Mechanisms - Rear Quarter Window Glass Upper Weatherstrip

Removal and Installation

Removal

1. Partially lower convertible top.
2. Remove seal from carrier.

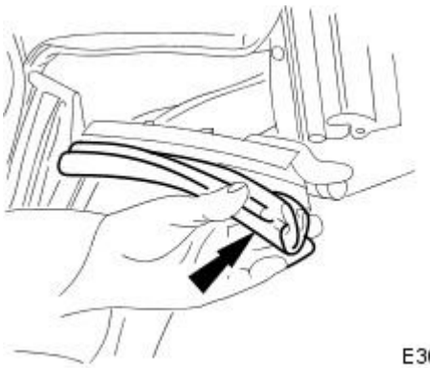

E36034

3. Clean carrier seal locating channel and apply a thin film of Johnson KY Jelly or equivalent.

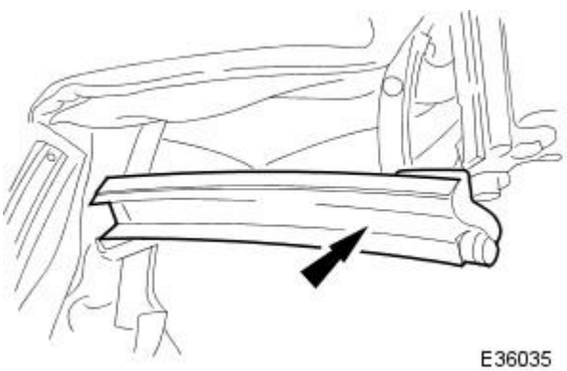

E36035

Installation

1. Install seal in carrier channel ensuring it is fully seated.
2. Fully raise convertible top and align seal to abut adjacent seals.

Glass, Frames and Mechanisms - Rear Quarter Window Regulator MotorConvertible

Removal and Installation

Removal

1. Fully raise adjacent door glass and open door.
2. Remove convertible top. refer to 76.86.15.
3. Remove rear quarter glass inner seal. Refer to 76.40.33.
4. Remove inner seal carrier rear screw.

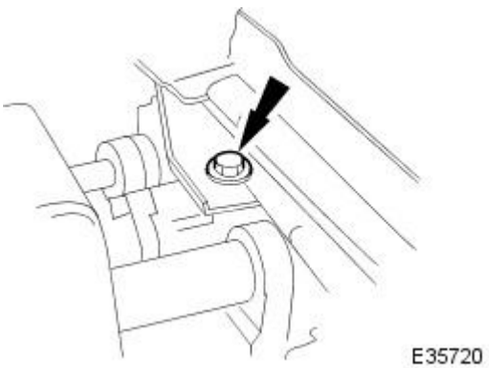

5. Remove seal carrier front screw and remove carrier from vehicle.

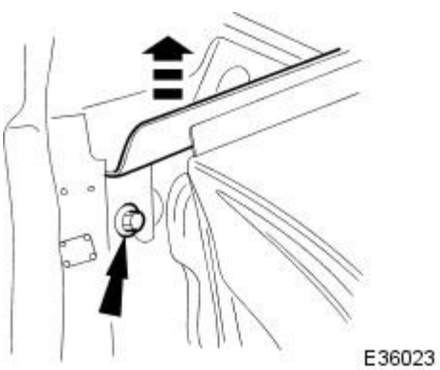

6. Remove quarter glass outer seal.
   - Apply protective tape to rear fender along outer edge of seal.
   - Exercising care to avoid damaging paintwork, use a thin blade over tape to remove seal from carrier.

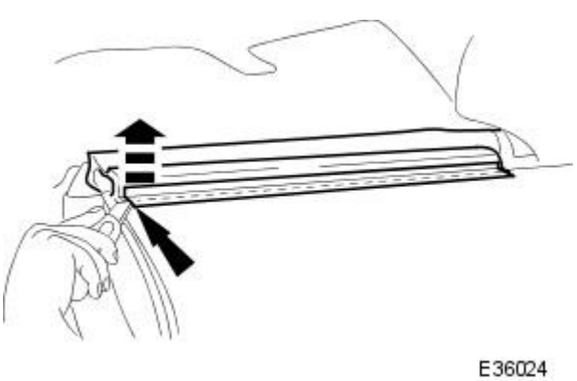

7. Remove quarter glass outer seal carrier.
   - Remove screws.
   - Remove seal carrier from vehicle.

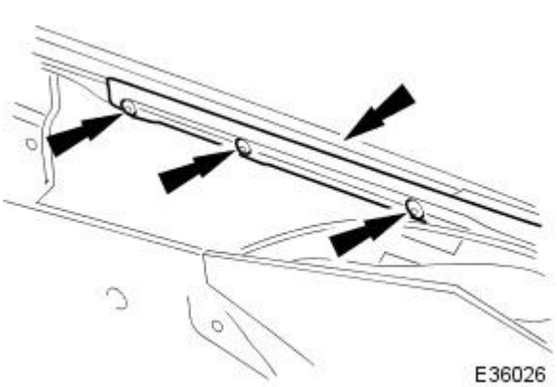

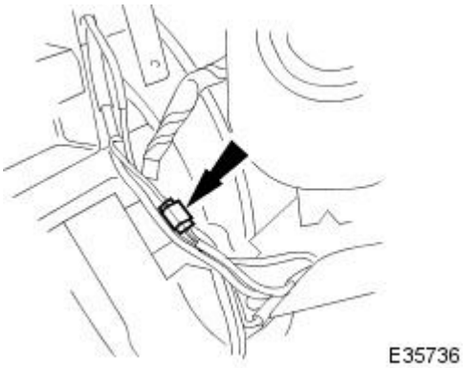

8. Disconnect lift motor link lead from rear harness multiplug.

9. If earlier PVC water shedder is installed, route glass lift motor link lead through penetration and remove water shedder from body.

10. Connect a switched 12 volt supply to motor link lead connector and power glass to fully raised position.

11. Switch off 12 volt supply and disconnect from motor connector.

12. Remove three nuts securing glass lift motor/regulator assembly to body.

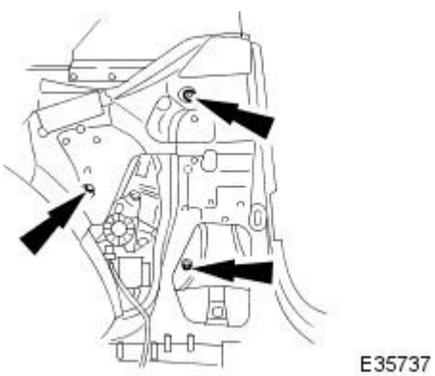

13. Feeding link lead and multiplug through water shedder (later moulded type), withdraw motor/regulator adjusters from body and remove assembly.

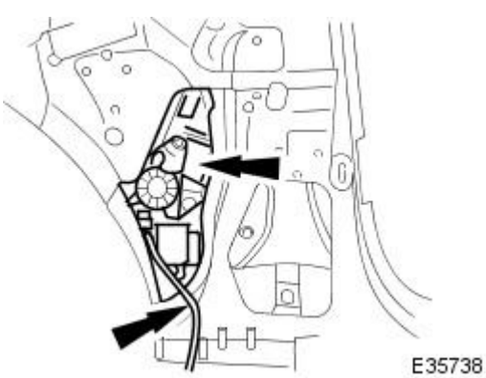

Installation

1. Guiding link lead through water shedder (later type), lower motor/regulator assembly through upper aperture and locate adjusters in body apertures.

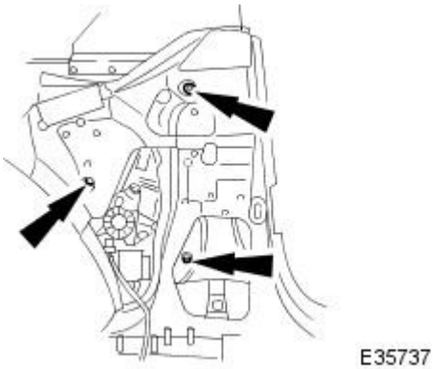

2. Install but do not fully tighten locking/securing nuts on motor/regulator adjusters.

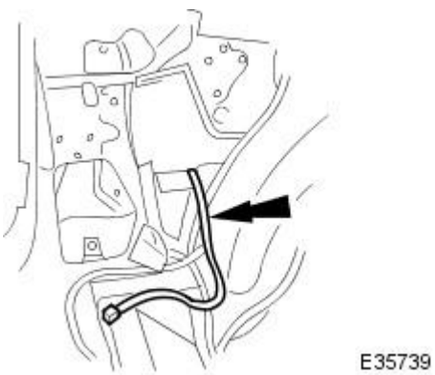

3. Install water shedder (early PVC type), routing motor link lead through penetration and leaving access for glass installation.

4. NOTE: Do not install speakers, rear quarter casing or rear seat at this stage

Install and manually raise and latch convertible top assembly. Refer to 76.86.15.

5. Position inner seal carrier on vehicle and install front screw.

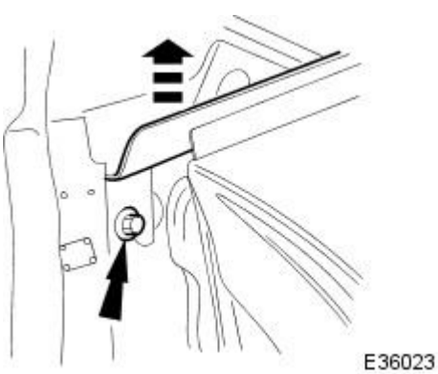

6. Install inner seal carrier rear screw.

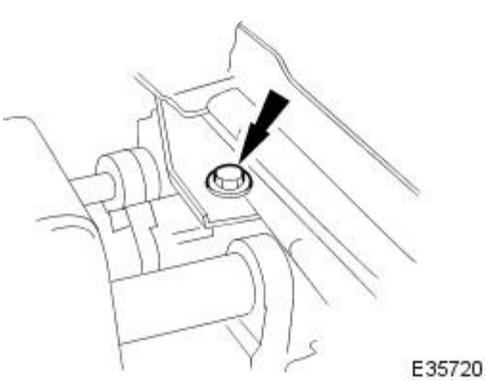

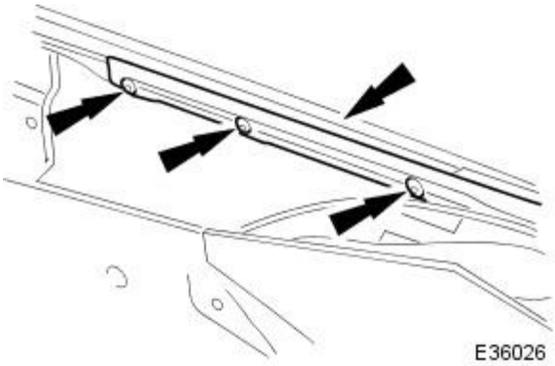

7. Install quarter glass outer seal carrier.

- Position seal carrier on vehicle.
- Install carrier screws.

8. Install rear quarter glass inner seal. Refer to 76.40.33.

9. Install quarter glass outer seal.

- Exercising care to avoid damaging seal and paintwork, use a rubber faced hammer to install seal on carrier.
- Remove protective tape.

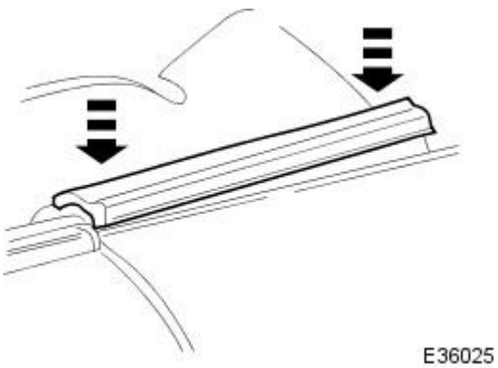

10. Connect switched 12 volt supply to rear quarter glass motor harness multiplug.

11. Carefully motor rear quarter glass up to just contact top seal.

12. Carefully close adjacent door ensuring glass does not contact rear quarter glass.

13. Slacken lower adjuster locknut.

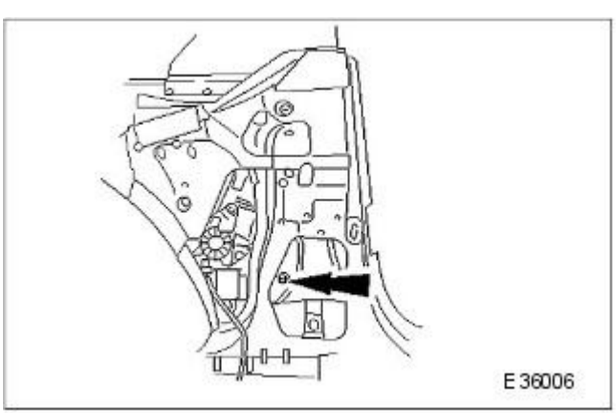

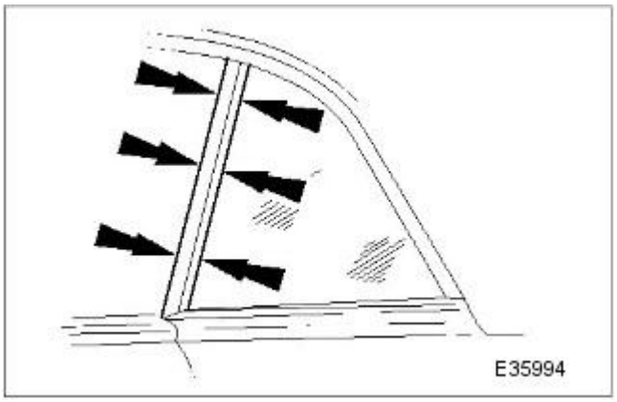

14. Move rear quarter glass to achieve a parallel 15mm gap between front edge of rear quarter glass frame and rear edge of door glass.

15. Tighten lower adjuster locknut.

16. Slacken upper adjuster locknut.

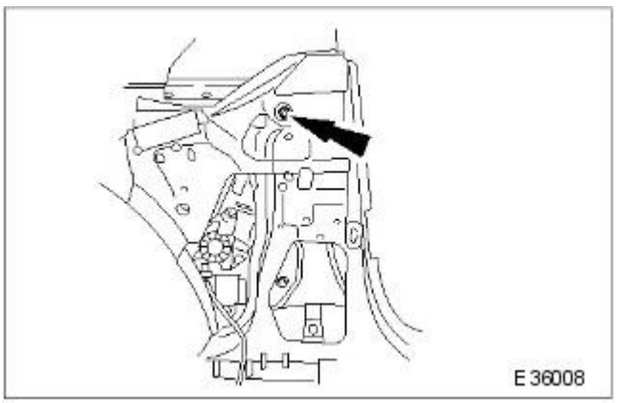

17. Turn upper adjuster to achieve lateral alignment of rear quarter glass upper edge with top seal.

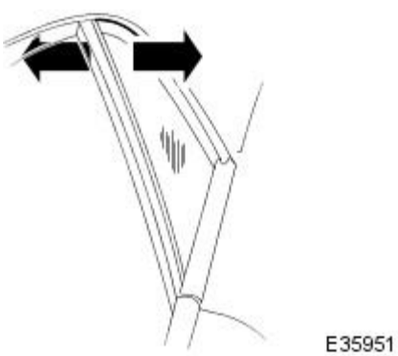

18. Tighten upper adjuster locknut.

19. Slacken rear adjuster locknut.

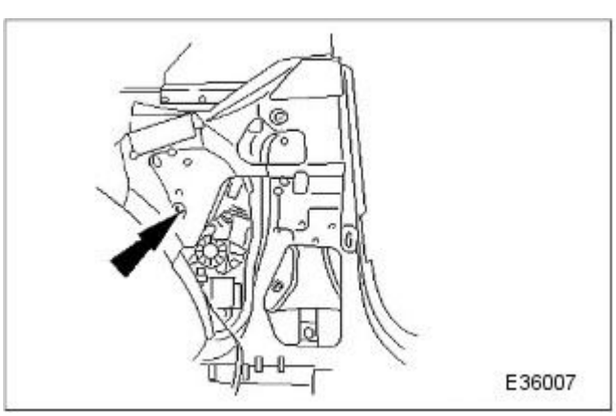

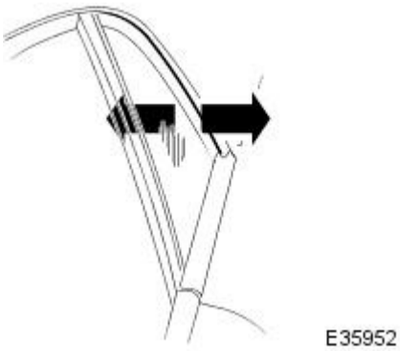

20. Turn rear adjuster to achieve lateral alignment of rear quarter glass rear edge with top seal.

21. Tighten rear locknut.

22. Fully raise rear quarter glass, check alignment with seals and adjust as necessary.

23. Disconnect 12 volt supply from rear quarter glass link lead multiplug.

24. Connect rear quarter glass motor link lead to harness multiplug.

25. Connect ground cable to battery terminal and fit battery cover. Refer to 86.15.15.

26. Turn ignition key to II, fully lower and raise convertible top, turn ignition key to position O.

27. Check rear quarter glass alignment with top seal and re-adjust as necessary.

28. Turn ignition key to II, fully lower and raise convertible top, turn ignition key to position O.

29. Finally check rear quarter glass alignment with seals.

30. Install rear speaker assembly. Refer to 86.50.12.

31. Install rear quarter casing. Refer to 76.13.73.

32. Install rear quarter casing capping. Refer to 76.13.76.

33. Install rear seat cushion. Refer to 76.70.37.

34. Install rear seat squab. Refer to 76.70.38.

Glass, Frames and Mechanisms - Rear Window Glass2-Door

Removal and Installation

Removal

1. Remove battery cover and disconnect ground cable from battery terminal.
2. Using masking tape, mark top and bottom central positions of finisher on BIW.

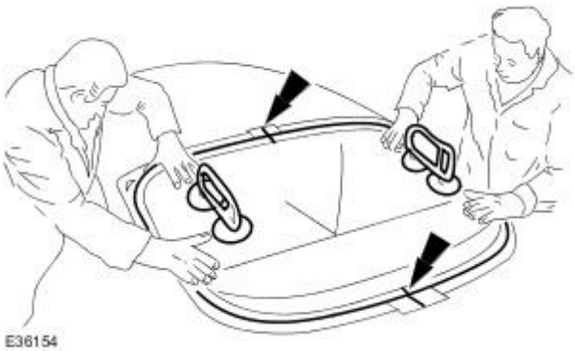

3. Remove backlight finisher. Refer to 76.43.46.
4. Remove rear seat cushion and squab. Refer to 76.70.37 and 76.70.38.
5. Remove coat hanger hook.
6. Remove rear quarter casing. Refer to 76.13.73.
7. Remove rear sub-woofer speaker cover. Refer to 86.51.05.
8. Remove rear parcel shelf. Refer to 76.67.06..
9. Disconnect backlight heater connectors.

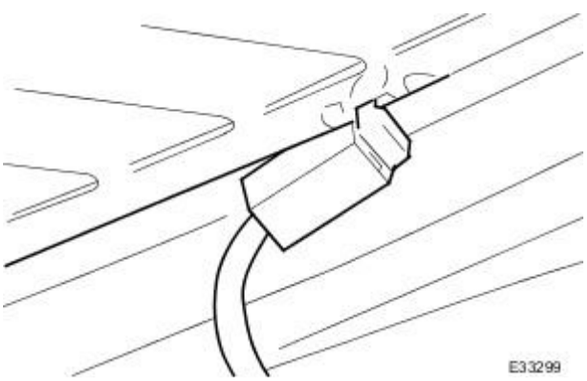

10. Disconnect alarm aerial connector from centre of backlight.

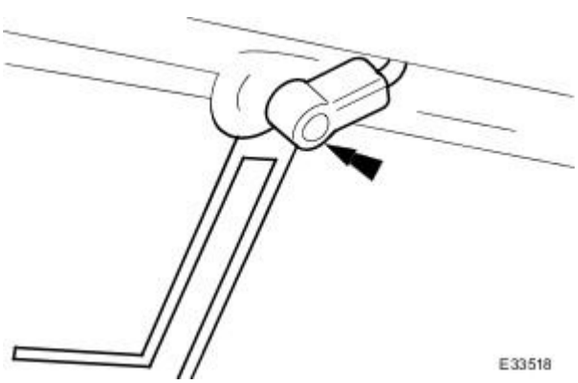

11. If high level stop lamp is fitted, withdraw lamp cover from two clips on base assembly.

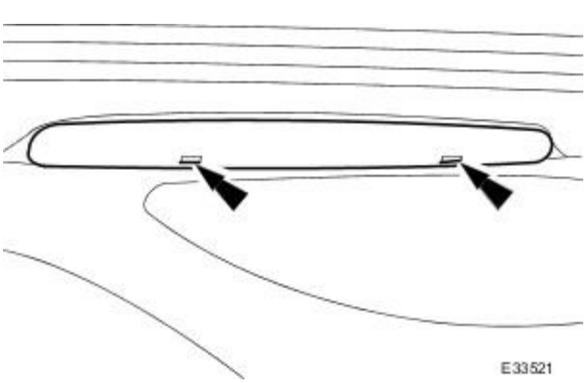

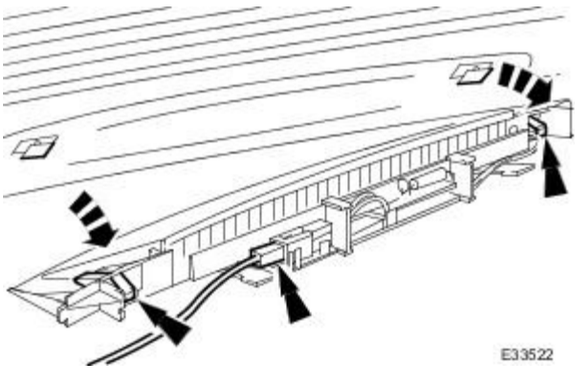

12. Disconnect and remove high level stop lamp.

- Disconnect harness connector from lamp.
- Lift lamp assembly clear of two retainers on backlight and remove lamp from vehicle.

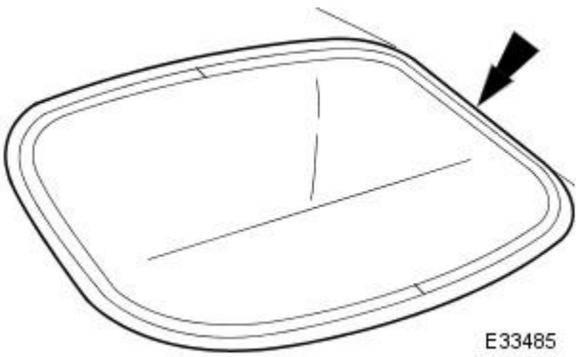

13. Apply protective masking tape around backlight aperture.

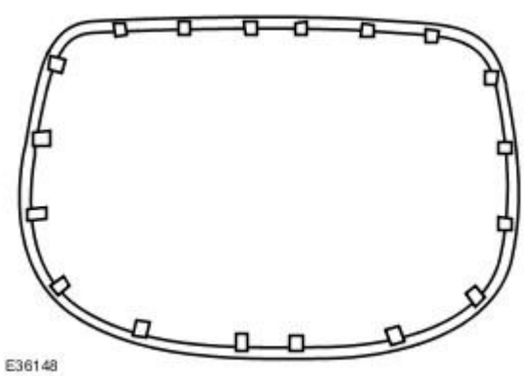

14. Use masking tape to mark the positions of the eighteen finisher securing clips then remove clips from glass.

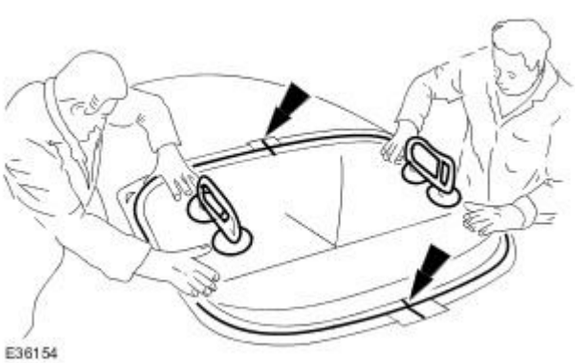

15. If original backlight is to be re-fitted, mark top and bottom central positions with masking tape to aid re-positioning.

16. Prepare cheese wire and cutting handle.

1. Position cutting handle central tube fully upwards in handle.
2. Cut a suitable length of cheese wire and pass one end through handle tube and locating aperture.
3. Move cutting handle central tube fully downwards to secure cheese wire

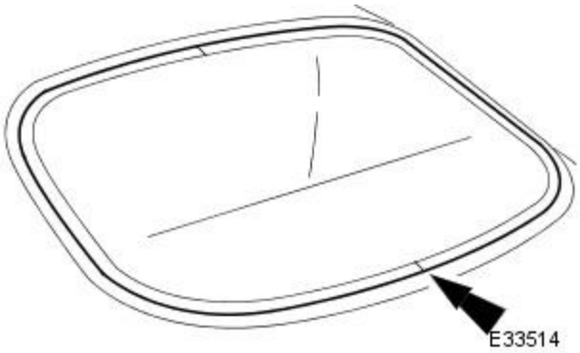

17. Using a suitable long bladed tool, penetrate backlight Betaseal at lower central position.

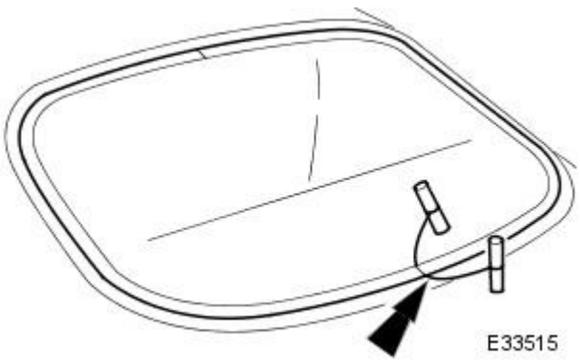

18. Remove tool, pass free end of cheese wire through penetration and fit second cutting handle.

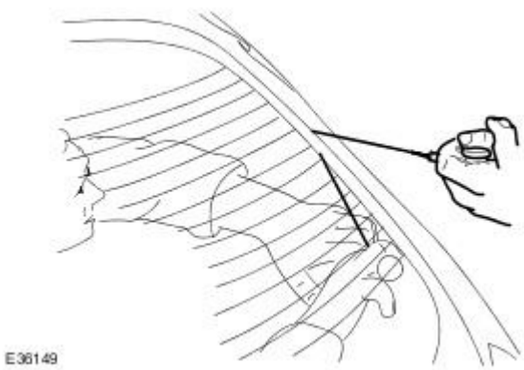

19. With assistance, use the cheese wire to cut around the backlight glass exercising particular care at the corners to avoid damage to paint

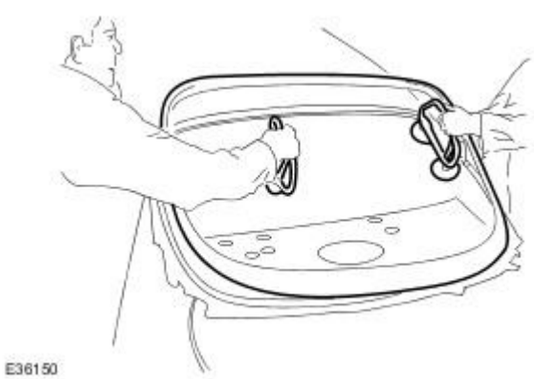

20. Fit lifting handles to glass, carefully remove backlight from vehicle and place on clean cloth on bench.

21. Remove lifting handles from backlight glass.

22. Remove cheese wire cutting tool from vehicle, separate handles by moving centre tubes upwards and discard cheese wire.

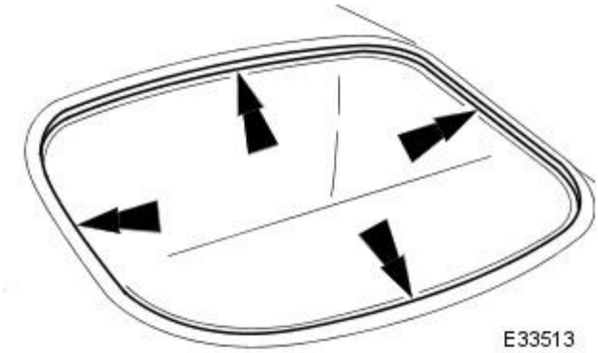

23. Apply protective tape to glass aperture flange.

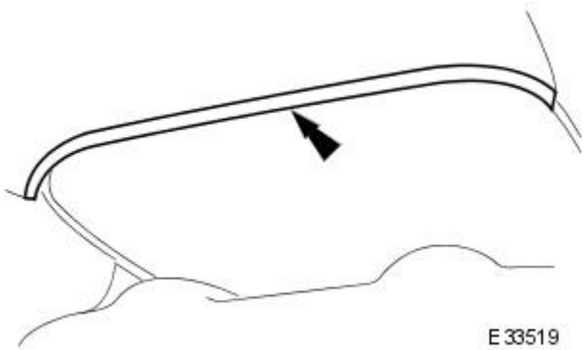

24. Apply protective tape to rear edge of headlining.

25. Place protective sheet over parcel tray area.

26. Exercising care not to damage paintwork, use vibroknife to remove residual sealant from body flange.

27. Remove protective tape from glass aperture flange.

Installation

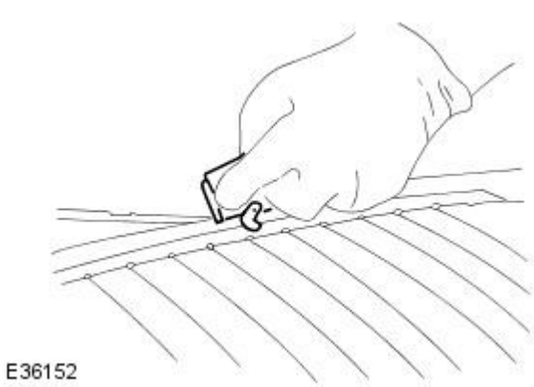

1. If original backlight is to be refitted, remove residual sealant from glass mating surface using a suitable scraper.

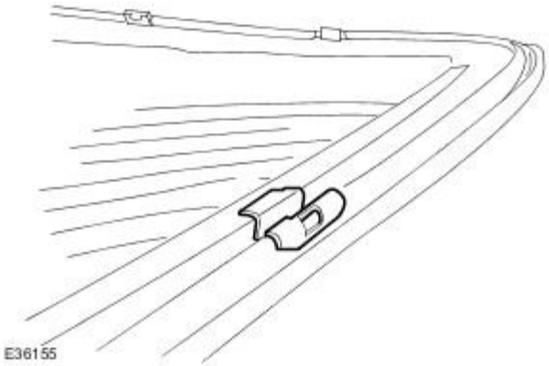

2. Thoroughly clean mating surface using Betawipe spirit and fit finisher securing clips at positions marked by masking tape.

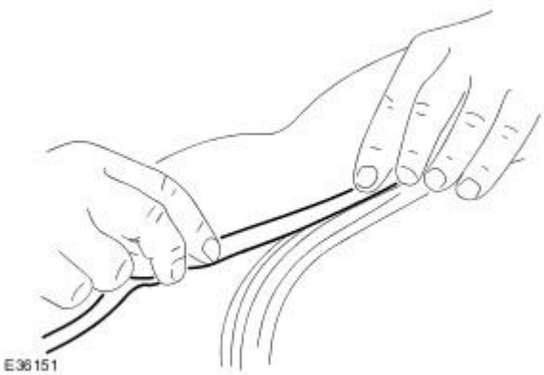

3. To prevent sealant ingress into clips causing difficulty in subsequent removal of finisher apply masking tape to back of finisher.

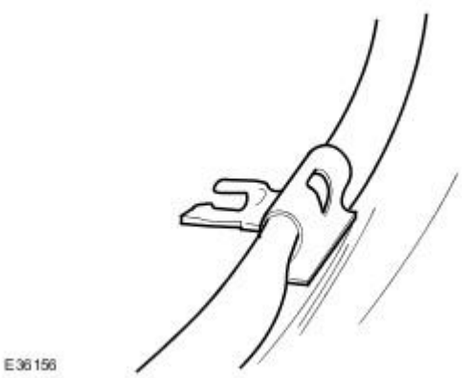

4. Fit and fully seat finisher onto clips.

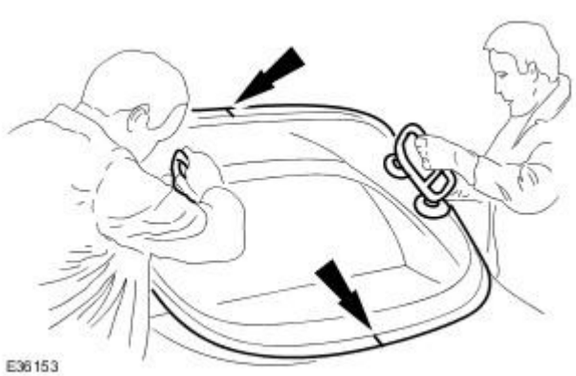

5. If backlight is being renewed, fit lifting handles to glass, with assistance position it correctly in aperture and using masking tape, mark top and bottom central positions on glass and BIW.

6. Remove glass from vehicle, position on bench and remove lifting handles.

7. Clean glass mating edge and body aperture flange using Betawipe spirit.

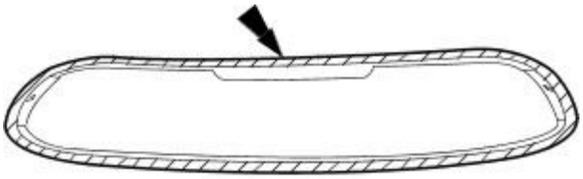

E33516

8. Apply glass primer to mating area of glass.

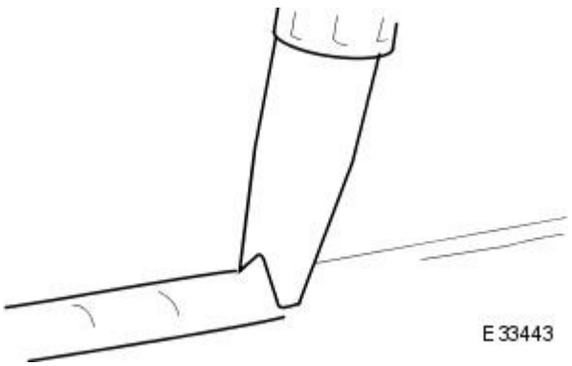

E33443

9. Cut Betaseal nozzle to achieve a triangular section bead 8mmwide by 10mm high.

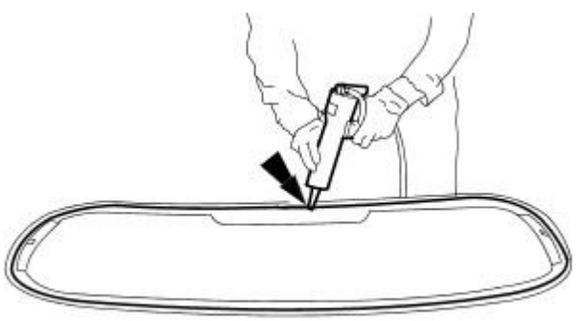

E33517

10. Using a suitable pneumatic application gun, apply a uniform bead of sealant to the glass edge commencing at bottom center and overlapping the ends approximately 100mm.

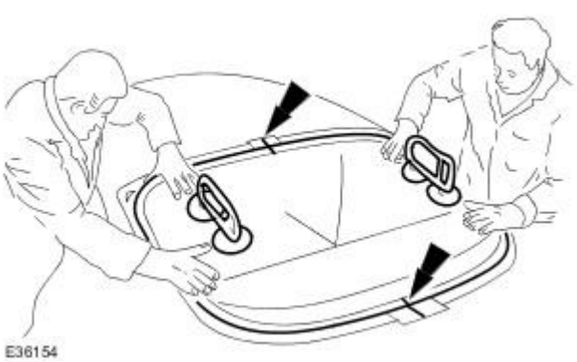

E36154

11. Fit lifting handles and with assistance, carefully align glass with body markings and press firmly into place.

12. Remove lifting handles.

13. Remove tape markers from glass.

14. Aligning central joints with tape markers on BIW, fit finisher to backlight. Refer to 76.43.46.

15. Remove tape markers from BIW.

16. Remove protective sheet from rear parcel shelf area.

17. Remove protective tape from rear edge of headlining.

18. Connect alarm aerial and backlight connectors.

19. Fit and fully seat high level stop lamp on backlight retainers.

20. Fit harness connector to high level stop lamp and fit and fully seat cover onto lamp retaining clips.

21. Fit rear parcel shelf. Refer to 76.67.06.

22. Fit sub-woofer speaker and cover. Refer to 86.51.05.

23. Fit rear quarter casings. Refer to 76.13.73.

24. Fit rear coat hanger hook.

25. Fit rear seat squab and cushion. Refer to 76.70.37 and 76.70.38.

26. Connect ground cable to battery terminal and fit battery cover. Refer to 86.15.15.

27. Thoroughly clean backlight and surrounding area.

Glass, Frames and Mechanisms - Rear Window GlassConvertible

Removal and Installation

Removal

1. Remove battery cover and disconnect ground cable from battery terminal. Refer to 86.15.19.
2. Remove rear seat cushion. Refer to 76.70.37.
3. Remove rear seat squab. Refer to 76.70.38.
4. Remove rear quarter cappings.
5. Remove rear quarter casings. Refer to 76.13.73.
6. Disconnect harness connectors from backlight heater terminals.

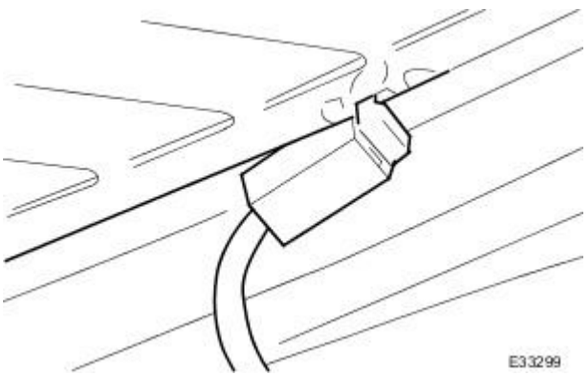

7. Remove carpet from convertible top stowage compartment.
8. Slacken and remove nuts securing squab panel stiffener bracket to BIW and remove bracket from vehicle.

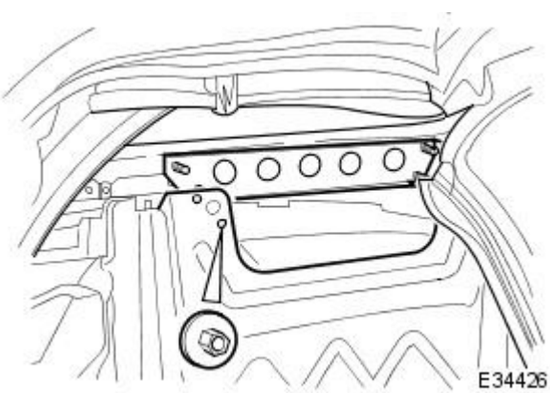

9. Slacken and remove headlining rear header rail clip securing nuts, remove clips and release tension cables.

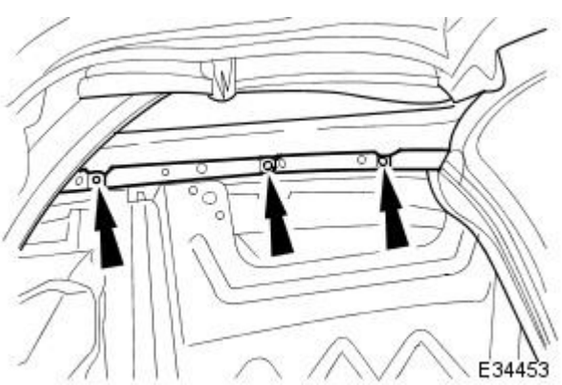

10. Exercising care to avoid damage to top, use a plastic or similarly soft lever to remove backlight seal.
11. Apply masking tape around backlight aperture up to glass edge to protect top and liner.

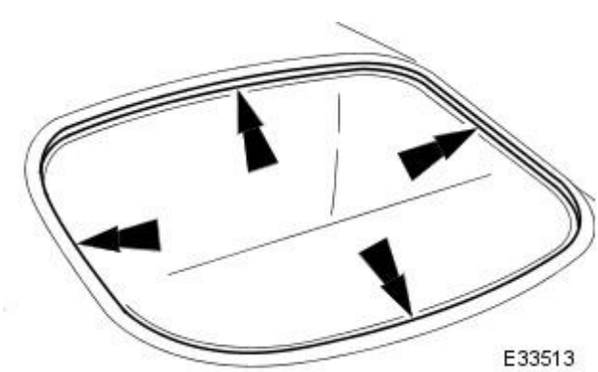

12. Prepare cheese wire and cutting handle.

- Position cutting handle central tube fully upwards in handle.
- Pass one end of a length of cheese wire through handle tube and locating aperture.
- Move cutting handle central tube fully downwards to secure cheese wire.

13. Using a pointed tool, penetrate backlight Betaseal at lower central position, ensuring that contact is not made with fabric or glass.

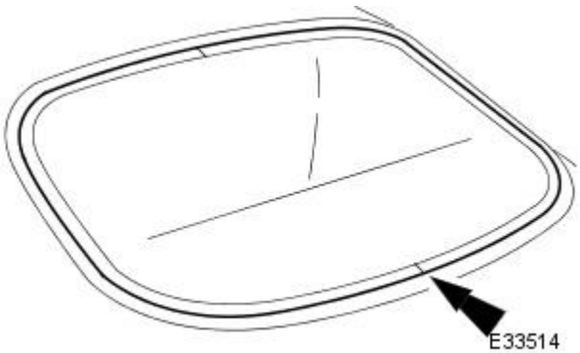

14. Remove tool, pass free end of cheese wire through penetration and fit secong cutting handle.

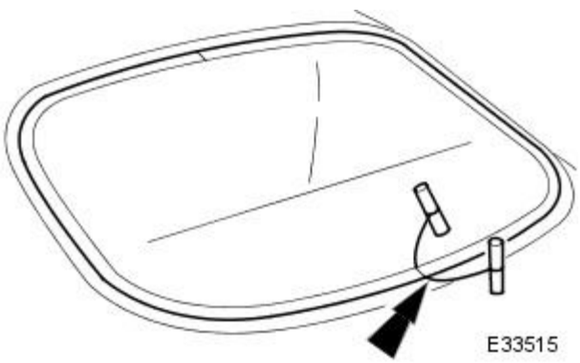

15. With assistance, use cheese wire to cut around the backlight glass, exercising particular care at corners to avoid damage to fabric and glass.

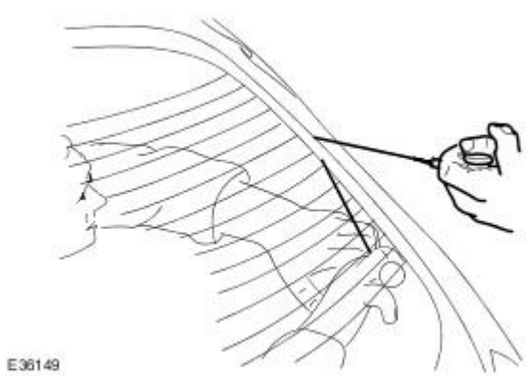

16. Fit lifting handles to glass and with assistance, carefully remove backlight from vehicle and place on clean cloth on bench.

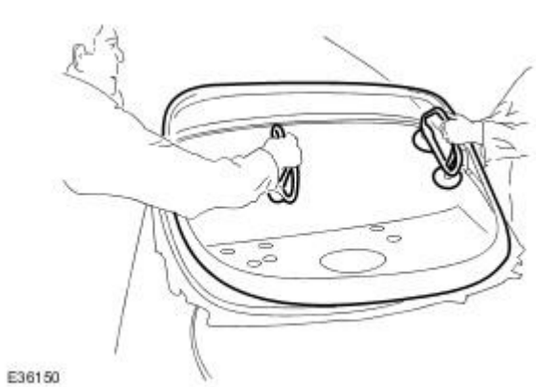

17. Remove lifting handles from backlight glass.

18. Remove cheese wire cutting tool from vehicle, separate handles by moving centre tubes upwards and discard cheese wire.

19. Exercising care to avoid damaging top, use a knife to remove residual Beatseal from sealing flange.

20. If original backlight is to be fitted, use a similar tool to remove residual Betaseal.

21. Remove protective masking tape from backlight aperture.

Installation

1. Fit and fully seat new rubber seal to backlight ensuring that joint is at bottom and central on glass.
2. Fit lifting handles to glass and with assistance, position it correctly in aperture and mark position with tape.
3. Remove glass from vehicle, position on bench and remove lifting handles.
4. Using Betawipe spirit, clean glass mating edge and body aperture flange.
5. Apply glass primer to mating area of glass.

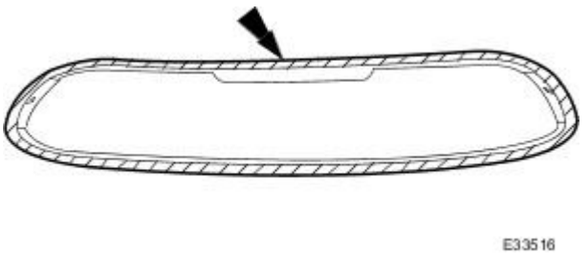

6. Cut Betaseal nozzle to achieve a triangular section bead 8mm wide by 10mm high.

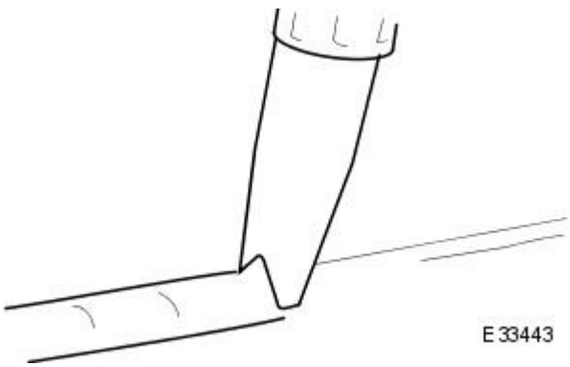

7. Using a pneumatic gun, apply a uniform bead of sealant to the glass edge, commencing at bottom center and overlapping the ends approximately 100mm.

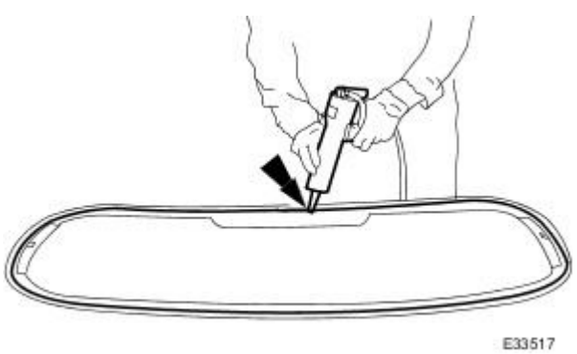

8. Fit backlight to aperture.
   - Fit lifting handles to glass and with assistance, carefully align backlight with tape markers on aperture.
   - Press backlight firmly into place, ensuring that rubber seal seats correctly all the way round.

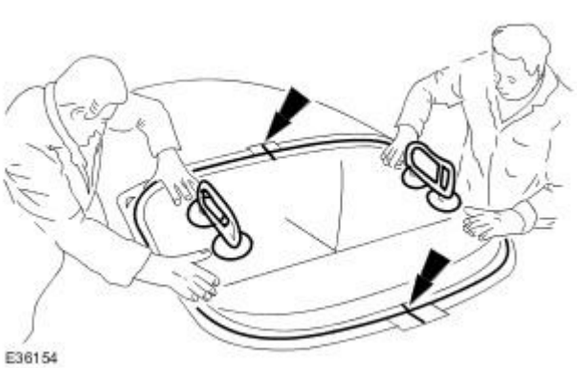

9. Remove lifting handles.
10. Remove tape markers.
11. Remove protective tape from interior.
12. Connect liner tension cables to outer securing brackets.
13. Position outer brackets to liner and body studs and fit and tighten bracket securing nuts.
14. Position inner brackets on liner and body studs and fit and tighten bracket securing nuts.

15. Position stiffener bracket on rear bulkhead and fit and tighten securing bolts.
16. Fit carpet to convertible top stowage compartment.
17. Connect heater harness connectors to backlight terminals.
18. Connect security system aerial to backlight terminal.
19. Fit rear quarter casings. Refer to 76.13.73.
20. Fit rear quarter cappings.
21. Fit rear seat squab. Refer to 76.70.38.
22. Fit rear seat cushion. Refer to 76.70.37.
23. Connect ground cable to battery terminal and fit battery terminal. Refer to 86.15.15.
24. Clean backlight and surrounding area.

Glass, Frames and Mechanisms - Windshield Glass

Removal and Installation

Special Tool(s)	
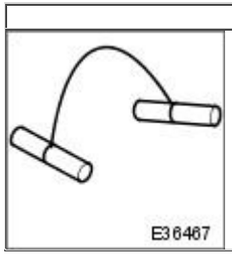	Cheese Wire Handles and Cheese Wire 42-001A and 42-001A-01

Removal

1. Remove battery cover and disconnect ground cable from battery terminal. Refer to 86.15.19
2. Remove interior mirror. Refer to 76.10.51 or 76.10.56.
3. Remove wiper arm and blade assembly. Refer to 84.15.44.90.
4. Remove plenum chamber cover. Refer to Section 76.10.01.
5. If heated windshield is fitted:
   - Disconnect LH power supply cable from connector located on secondary bulkhead.

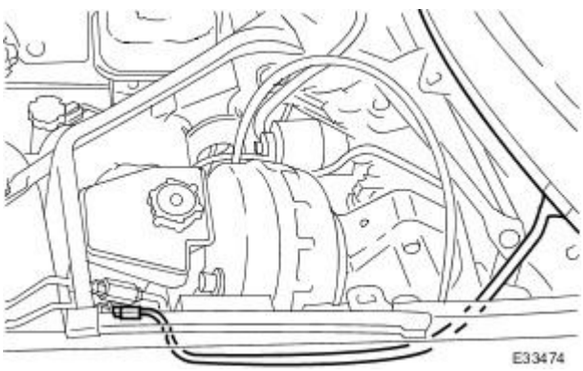

6. If heated windshield is fitted:
   - Disconnect RH power supply cable from connector located on secondary bulkhead.

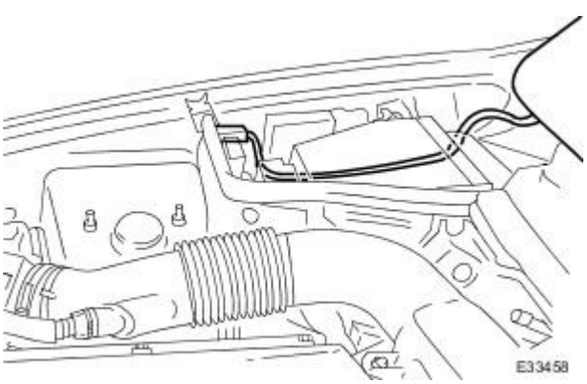

7. Slacken and remove RH water deflector securing bolt and remove deflector.

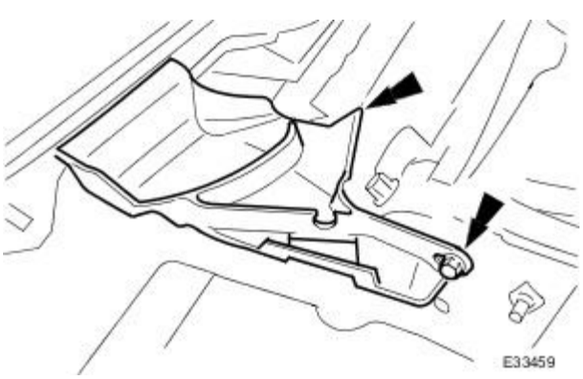

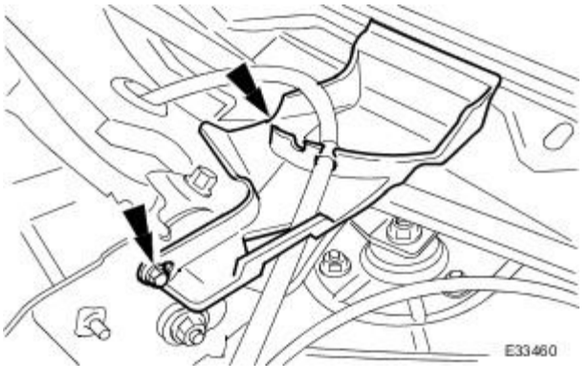

8. Slacken and remove LH water deflector securing bolt and remove deflector.

9. Remove windshield finisher. Refer to 76.43.40.

10. Marking the positions with masking tape, remove windshield finisher securing clips from edge of glass.

11. Remove each A post upper trim by carefully easing the three spring clips free.

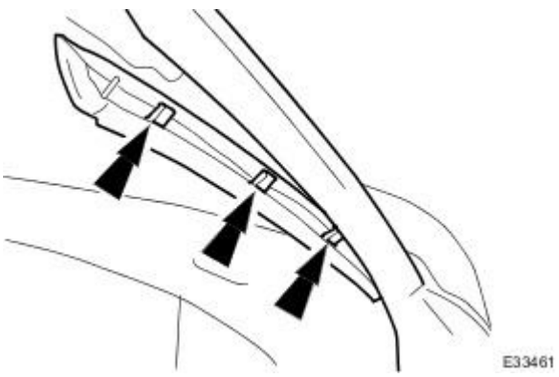

12. Remove roof console. Refer to 76.13.69.

13. Remove sun visors. Refer to 76.10.47.

14. Apply suitable protective tape around windshield aperture to protect paintwork.

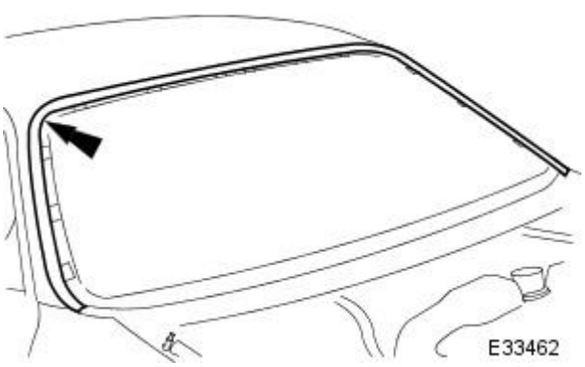

15. Apply suitable protective tape around leading edge of headlining.

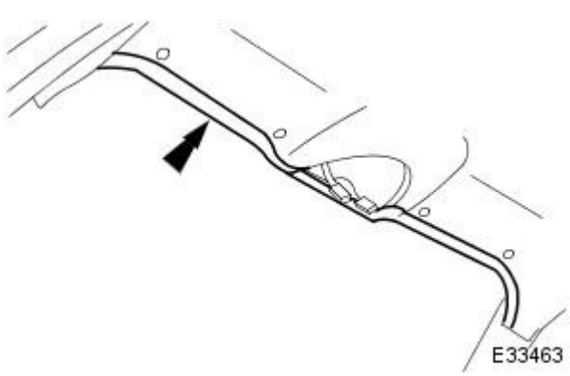

16. Prepare cheese wire and cutting handle.

- Position cutting handle central tube fully upwards in handle.
- Cut a suitable length of cheese wire 42-001A-01 and pass one end through handle tube and locating aperture.
- Move cutting handle central tube downwards to secure cheese wire.

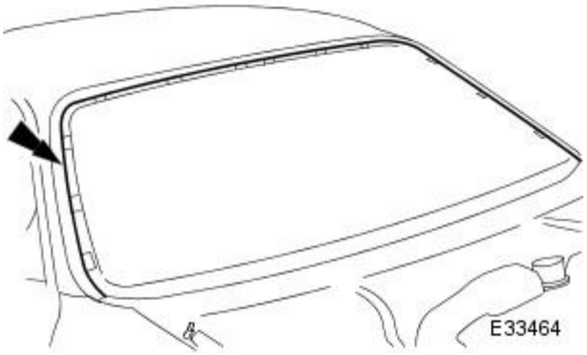

17. Using a suitable long bladed tool, penetrate Betaseal approximately 6in (150mm) from top of one A post.

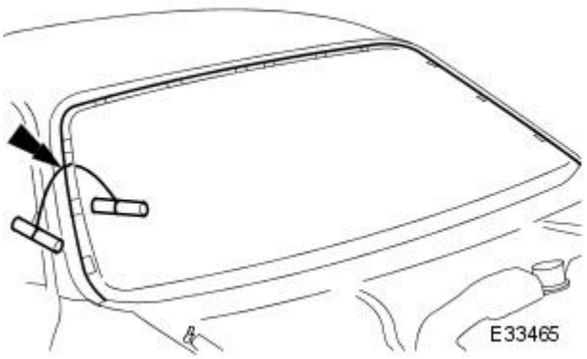

18. Remove tool, pass free end of cheese wire through penetration and fit second cutting handle.

19. Place a suitable protective sheet over fascia and place a protecting board over sheet.

20. With assistance and exercising care at corners to avoid damaging paintwork, cut around windshield commencing downwards and along the bottom.

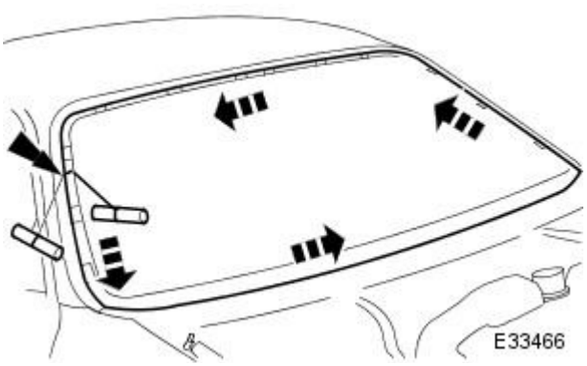

21. Fit lifting handles to glass and with assistance lift windshield clear of vehicle and place on cloth covered bench.

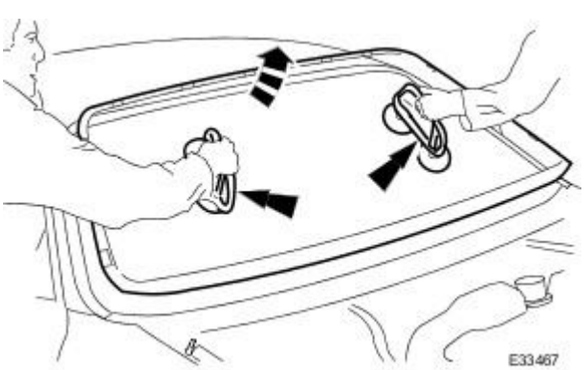

22. Remove lifting handles from glass.

23. Remove cheesewire cutter from windshield aperture, remove cutting handles and discard cheesewire.

24. Remove protective board from fascia, leaving protective sheet in position.

25. Exercising care not to damage paintwork, use vibroknife to remove residual sealant from body flange.

26. Remove protective cloth from fascia.

27. Remove protective tape from windshield aperture flange.

Installation

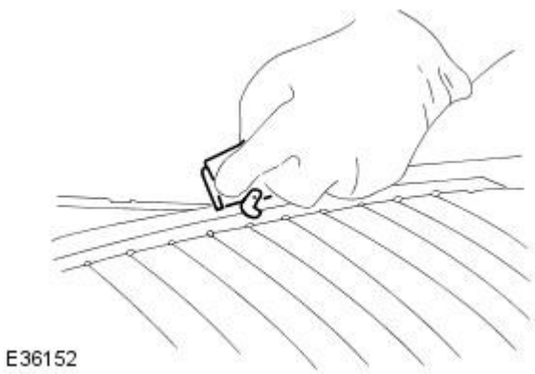

1. If original windshield is to be refitted:

- Remove residual sealant from glass mating surface using a suitable scraper.
- Check installation of the two spacer buttons at bottom of glass and replace if they are damaged or missing.

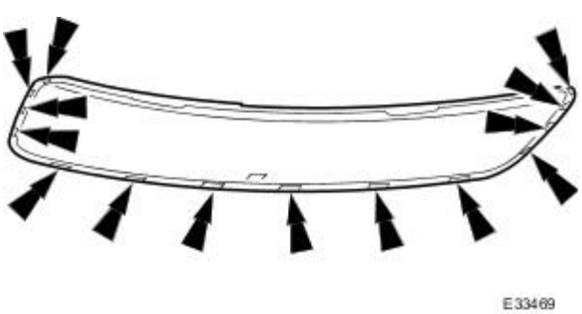

2. Thoroughly clean surface using Betawipe spirit, fit finisher securing clips at positions marked and remove masking tape.

3. Fit and fully seat finisher to windshield. Refer to 76.43.42.

4. To prevent sealant ingress into clips causing difficulty in subsequent removal of finisher, apply masking tape to back of finisher.

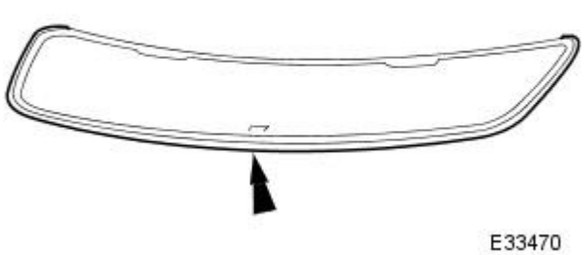

5. Fit lifting handles to glass and with assistance, correctly position windshield in body aperture and mark position with masking tape.

E34562

6. With assistance, remove windshield from vehicle and place on cloth covered bench.
7. Remove lifting handles and position glass outer face downwards.
8. Thoroughly clean glass edge and aperture flange with Betawipe spirit.
9. Apply glass primer to mating face of windshield.

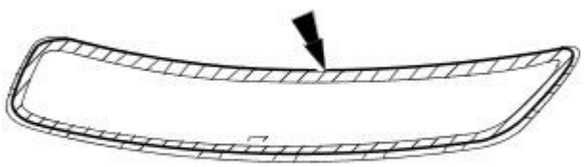

E33471

10. Cut Betaseal nozzle to achieve a triangular section bead 8mm wide by 10mm high.

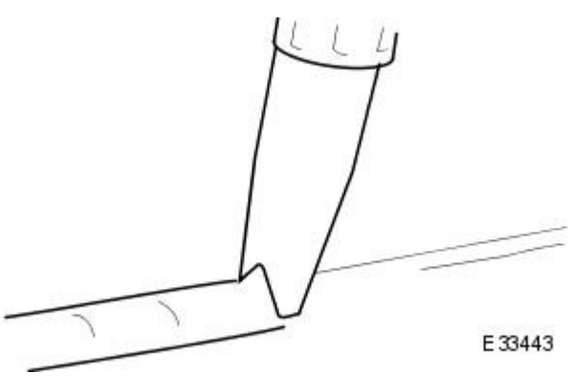

E33443

11. Using a suitable pneumatic application gun, apply a uniform bead of sealant to the glass edge commencing at bottom center and overlapping the ends approximately 100mm.

E33472

12. Fit lifting handles and with assistance, carefully position windshield in aperture aligning glass with body markings and press firmly into place.

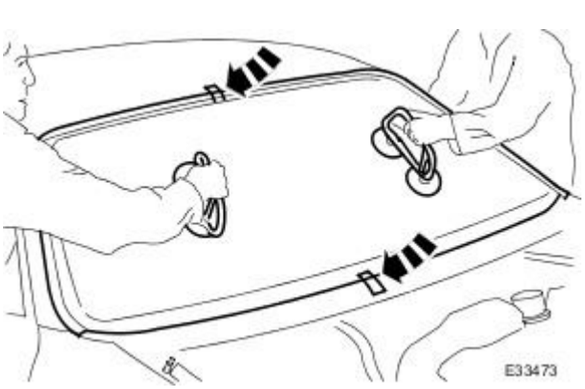

E33473

13. Remove lifting handles.
14. Remove tape marking windshield position.
15. Remove protective tape from leading edge of headlining.
16. Fit interior rear view mirror. Refer to 76.10.51.
17. Fit sun visors. Refer to 76.10.47.
18. Fit roof console. Refer to Section 76.13.69.
19. Install LH and RH water deflectors and fit and tighten securing bolts.
20. Fit plenum chamber cover. Refer to 76.10.01.
21. Fit Wiper arms. Refer to 84.15.44.90.
22. If heated windshield is fitted, connect LH power supply cable to connector on secondary bulkhead.

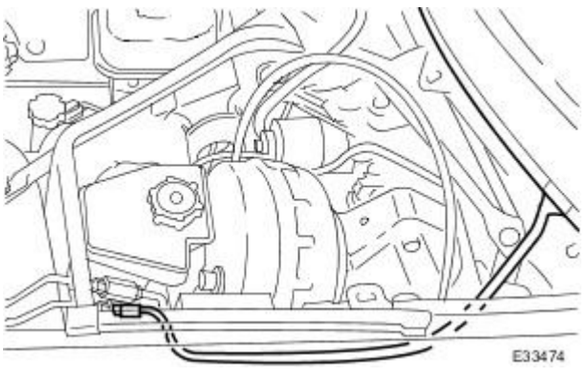

23. If heated windshield is fitted, connect RH power supply cable to connector on secondary bulkhead.

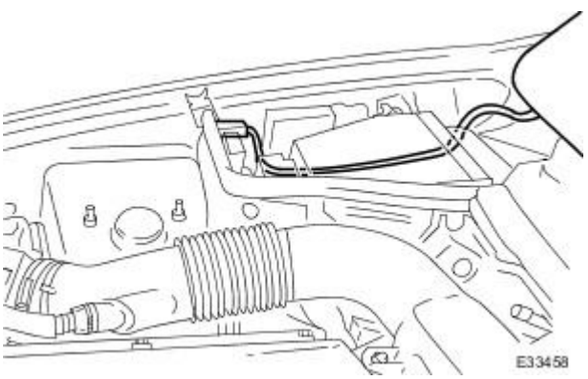

24. Thoroughly clean exterior and interior of windshield.
25. Connect ground cable to battery terminal and fit battery cover. Refer to Section 86.15.15.

Glass, Frames and Mechanisms - Windshield Moulding

Removal and Installation

Removal

1. Remove wiper arm and blade assembly. Refer to 84.15.44.90.
2. Remove plenum cover. Refer to 76.10.01.
3. Using a trim removal tool, carefully release windshield finisher from upper joint retaining clip.
4. Carefully release finisher from remaining retaining clips on 'A' post.

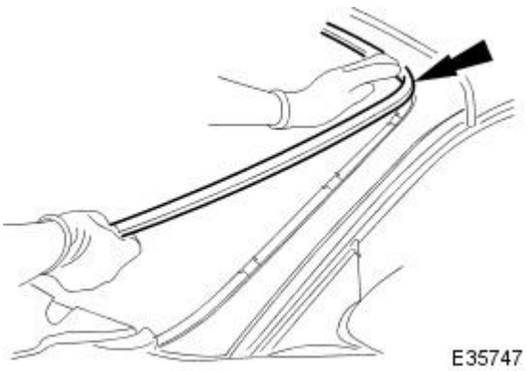

5. Clean mating surface of windshield.
6. If original finisher is to be re-fitted, clean mating surface.

Installation

1. Position finisher at 'A' post and press firmly to fully seat in retaining clips
2. Fit finisher to upper joint retaining clip.
3. Fit plenum cover. Refer to 76.10.01.
4. Fit wiper arm and blade assembly. Refer to 84.15.44.90.

Instrument Panel and Console -

Torque Specifications

Description	Nm	lb-ft	lb-in
Fascia lower mounting bracket to fascia centre panel.	17 - 23	13 - 17	-
Fascia lower mounting bracket to BIW.	7 - 10	-	62 - 89
Air bag carrier platform to air bag support strut.	7 - 10	-	62 - 89
Air bag support strut to BIW.	17 - 23	13 - 17	-
Support reinforcement bracket to BIW tunnel.	7 - 10	-	62 - 89
Fascia inner panels to support reinforcement bracket.	17 - 23	13 - 17	-
Fascia top roll duct to BIW.	7 - 10	-	62 - 89
Fascia end panel to BIW.	17 - 23	13 - 17	-
Driver side lower rail.	7 - 10	-	62 - 89
Air bag ECU to fascia.	10.5 - 13.5	7.5 - 10	-
Fascia to A pillar ground connection.	14 - 18	10 - 13	-
Driver's underscuttle to fascia.	7 - 10	-	62 - 89

Instrument Panel and Console - Instrument Panel and Instrument Panel Console

Description and Operation

Instrument Panel

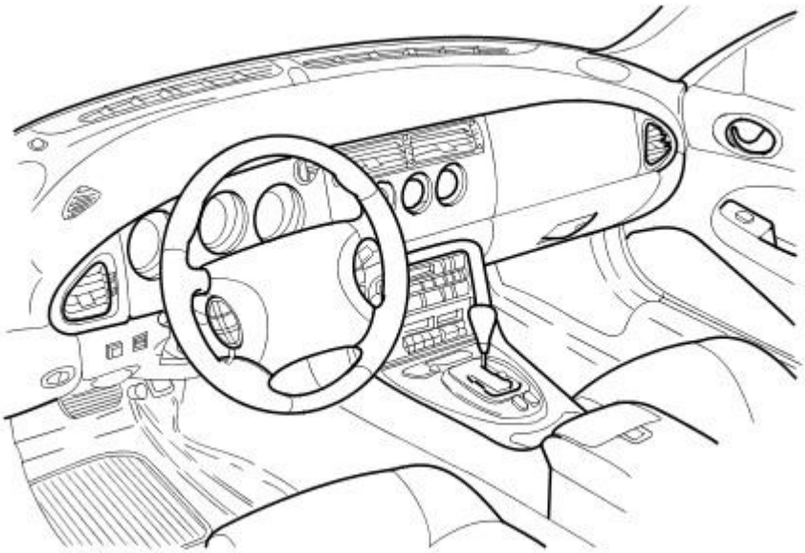

E36103

The full-width, molded PVC instrument panel is located by a dowel at each 'A' post and secured by bolts at the bulkhead and 'A' posts. Faced with maple or walnut burr veneer, the panel accepts two separate instrument clusters, one containing four major instruments, the other containing three auxiliary instruments.

The major instrument cluster is situated directly ahead of driver, while the auxiliary cluster is located inboard from the driver, above the center console.

Center Console

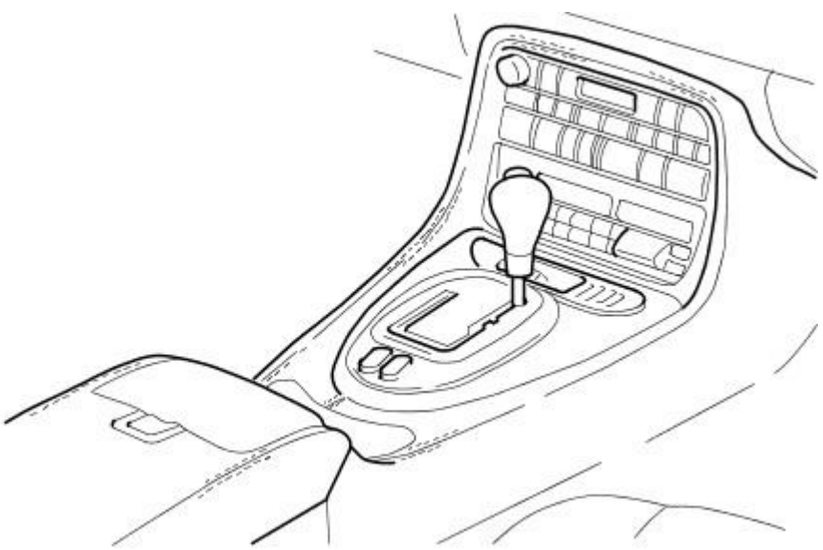

E33425

The center console is an injection molded armature trimmed in matching ambla with maple or burr walnut veneer top finisher. A lined stowage tray/pen holder is incorporated forward of the 'J' gate and an illuminated smoker's compendium with press and release lid is fitted at the rear of the ' J' gate. The rear section of the console forms a deep stowage box with rear hinged lid which is padded to form a central arm rest. A hinged cup holder is incorporated in the front end of the stowage box lid. A color-keyed 'J' gate surround surmounts the veneer top finisher and the 'SPORT' mode selector switch and cruise control switch are situated immediately to the rear of the 'J' gate.

Two tongues at the front of the console locate in slots in the lower fascia, and the center and rear of the console are secured by screws to floor brackets.

Roof Console

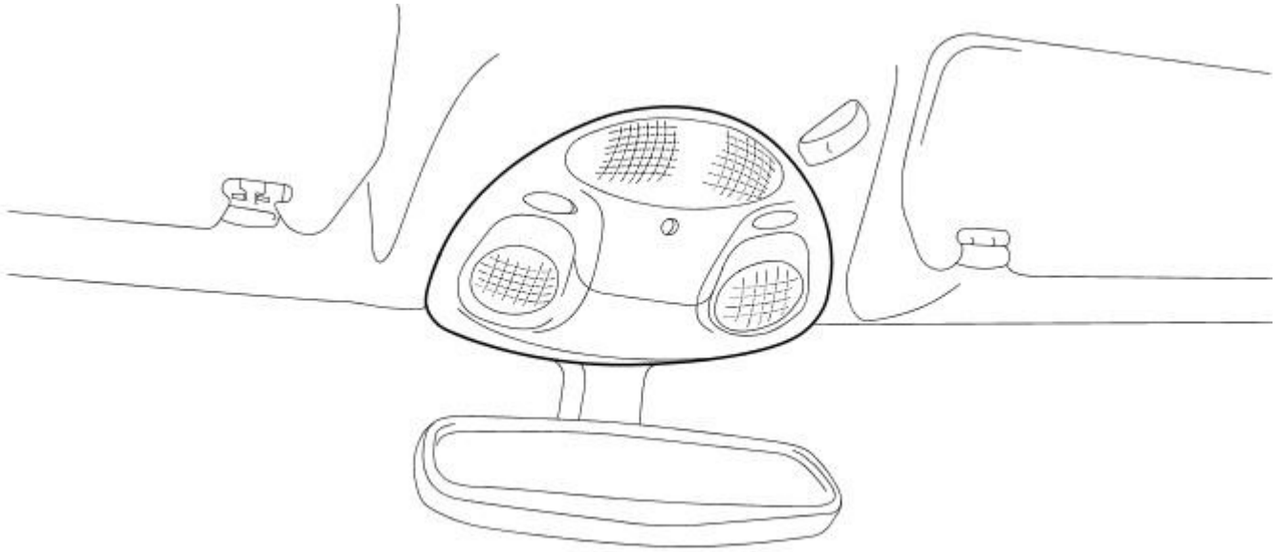

E33653

The roof console installed centrally at the front of the roof is common to both models and incorporates two courtesy lamps, switchable map/reading lights, a glass breakage sensor and two occupancy sensors. The occupancy sensors monitor the passenger position only, therefore the roof console is a handed assembly.

Instrument Panel and Console - Audio Unit Housing

Removal and Installation

Removal

1. Remove battery cover and disconnect earth lead from terminal. Refer to 86.15.15.
2. Remove 'J' gate surround. Refer to 76.25.24.
3. Remove center console assembly for access. Refer to operations in this section.
4. Slacken and remove the six radio console securing screws and partially withdraw the console for access.

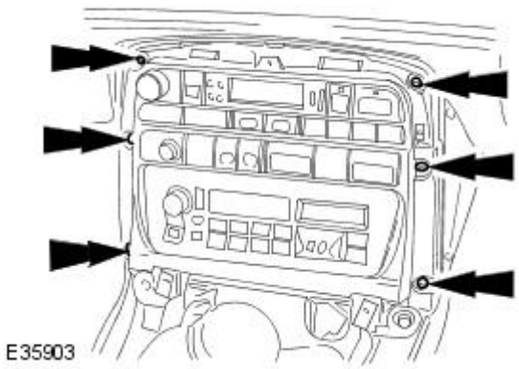

5. Disconnect radio assembly.
   - Disconnect console harness multiplugs and aerial co-axial connector.
   - Slacken and remove nut securing earth lead to radio and remove lead from stud.
   - Disconnect radio harness multiplug and position harness clear of center console.

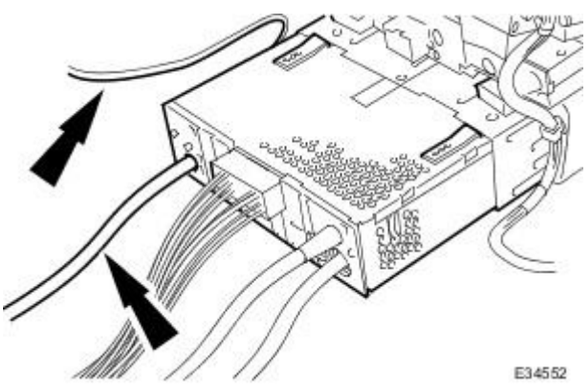

6. Remove radio.
   1. Withdraw radio console, remove radio from console and remove radio retaining plate.

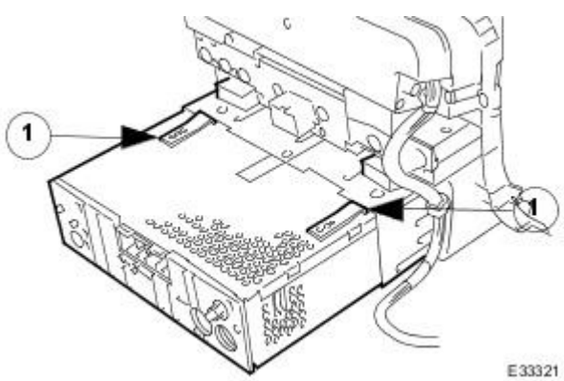

7. Remove air conditioning control module.
   - Slacken and remove the three air conditioning control module securing screws and remove the module.

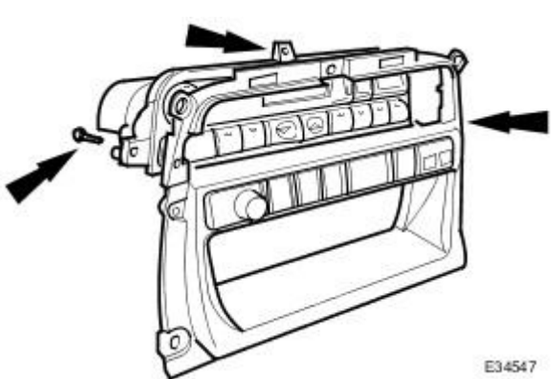

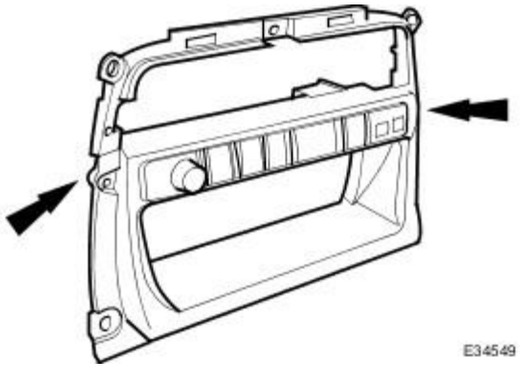

8. Remove center console switch module.
   - Releasing end locaters, lightly press switch module out of console.

9. Remove radio console from vehicle.

Installation

1. Connect aerial co-axial lead to radio and stow excess harness and lead lengths in radio mounting aperture.
2. Fully seat radio in console, ensuring that harnesses and leads do not obstruct.
3. Position and locate switch module in console.
4. Position the air conditioning control module in the console and fit and tighten the three securing screws.
5. Fit radio retaining plate on the console.
6. Holding radio console in position, route radio harness multiplugs into center console.
7. Connect radio harness and radio console harness multiplugs.
8. Route earth and aerial leads through radio console.
9. Finally position radio console and fit and tighten the six securing screws.
10. Fit earth lead to the radio stud and fit and tighten securing nut.
11. Connect aerial lead to radio.
12. Ensuring harness and leads do not obstruct, push radio fully home.
13. Fit center console. Refer to 76.25.01.
14. Fit 'J' gate surround. Refer to 76.25.24.
15. Connect earth cable to battery terminal and fit battery cover. Refer to 86.15.15.

Instrument Panel and Console - Floor Console

Removal and Installation

Removal

1. Position gear selector and passenger seat for access.
   - Turn ignition key to position II.
   - Apply footbrake and move gear selector to 'D'.
   - Release footbrake.
   - Power passenger seat to fully forward position and tilt squab forward.
   - Turn ignition key to O.
2. Remove battery cover and disconnect ground cable from battery terminal. Refer to 86.15.19.
3. Remove 'J' gate surround. Refer to 76.25.24.
4. Slacken and remove the four center console veneer panel securing screws and remove the mounting plates.

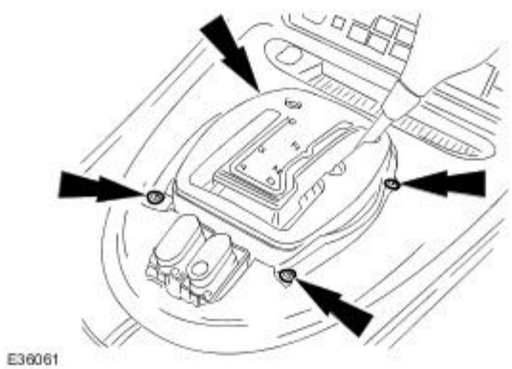

5. Position the veneer panel for access and disconnect the panel switch multiplugs.

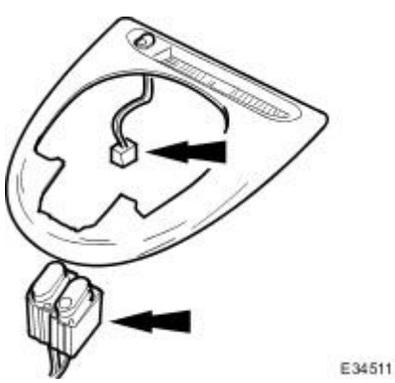

6. Remove console end trim cover and slacken and remove the two rear securing bolts.

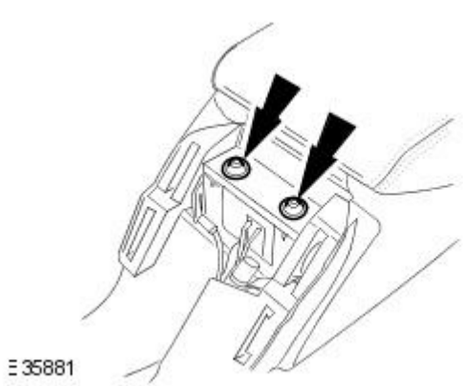

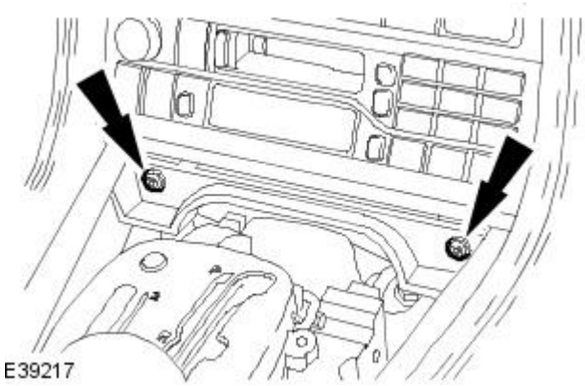

7. Slacken and remove the two forward securing bolts.

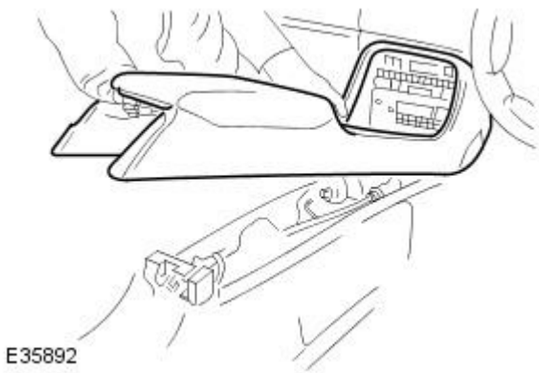

8. Position console for access, disconnect cigar lighter and valet switch harness multiplugs, lift console clear of 'J' gate and remove from vehicle.

Installation

1. Install and connect center console.

- Position console for access.
- Connect valet switch and cigar lighter harness multiplugs.
- Finally position console.
- Fit and tighten forward securing bolts.
- Fit and tighten rear securing bolts.
- Fit and fully seat console rear trim cover.
- Position veneer panel for access and connect panel switch harness multiplugs.
- Reposition and seat veneer panel.
- Align and fit panel mounting brackets.
- Fit and tighten panel securing screws.
- Fit 'J' gate surround. Refer to 76.25.24.
- Connect ground cable to battery terminal and fit battery cover. Refer to 86.15.15.

Instrument Panel and Console - Floor Console Ashtray

Removal and Installation

Removal

1. Remove battery cover and disconnect ground cable from battery terminal. Refer to 86.15.19.
2. Remove center console for access. Refer to operations in this section.
3. Open ashtray lid and remove cigar lighter.
4. Remove cigar lighter housing.
   - Remove tape securing harness to console underside..
   - Slacken and remove retaining ring from underside and remove housing complete with cable.

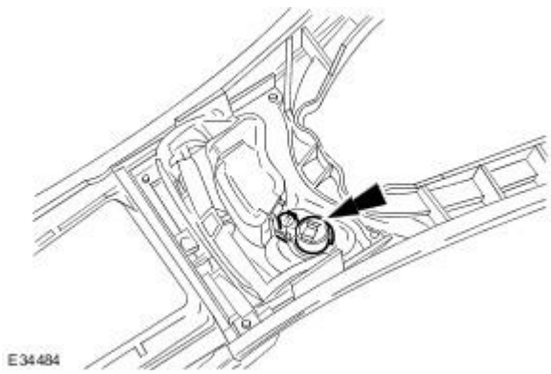

5. Release bulb housing tangs and withdraw bulb and housing from underside complete with flying lead.
6. Position console for access, slacken and remove the four ashtray securing screws and remove ashtray from console.

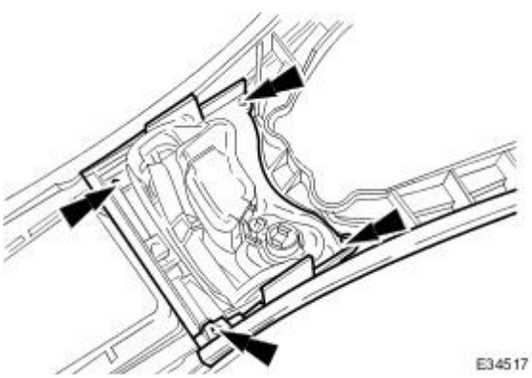

Installation

1. Position ashtray on center console.
2. Fit and tighten the four ashtray securing screws.
3. Fit and fully seat cigar lighter housing in ashtray and fit and tighten retaining ring.
4. Fit cigar lighter housing and illumination bulb.
5. Tape cables to underside of console.
6. Fit cigar lighter in housing.
7. Close ashtray lid.
8. Fit center console assembly. Refer to 76..
9. Connect multiplug at rear of centre console.
10. Fit centre console rear air distribution control grill.
11. Connect earth cable to battery terminal and fit battery cover. Refer to 86.15.15.

Instrument Panel and Console - Floor Console Finish Panel

Removal and Installation

Removal

1. Apply handbrake and turn ignition key to II.
2. Depress brake pedal, move gear selector to position N and turn ignition key to O.
3. Remove battery cover and disconnect ground cable from battery terminal.
4. Remove gear selector surround finisher. Refer to 76.25.24

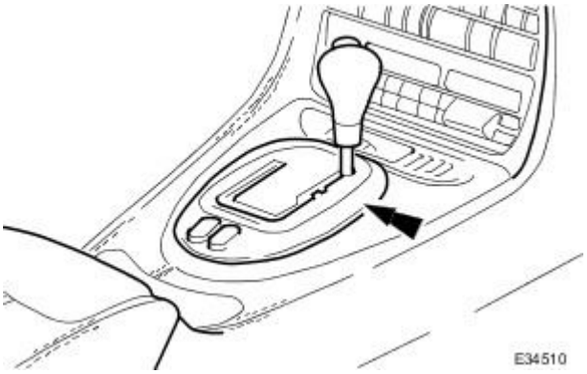

5. Remove Sport mode and Cruise Control switches from surround finisher.

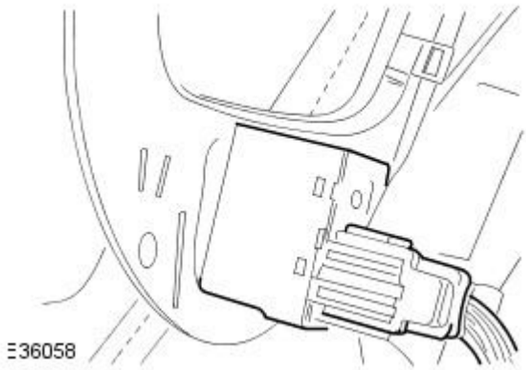

6. Slacken and remove the four screws securing the two console veneer panel clamp plates and remove the clamp plates.

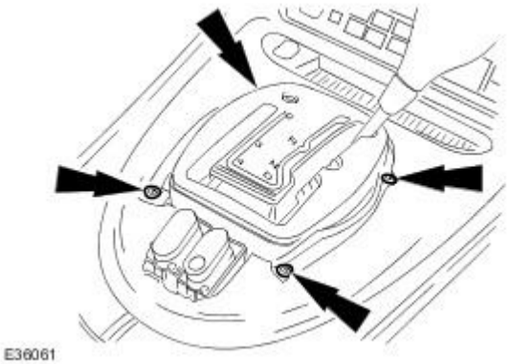

7. Withdraw veneer panel, passing switches through the aperture. On the convertible model, disconnect the roof operating switch harness multiplug.

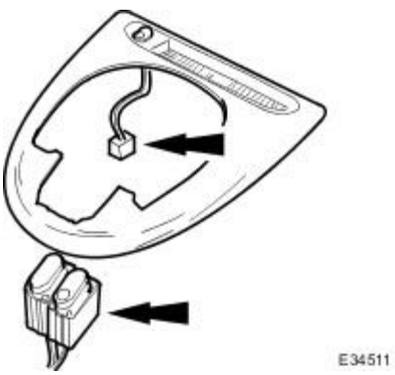

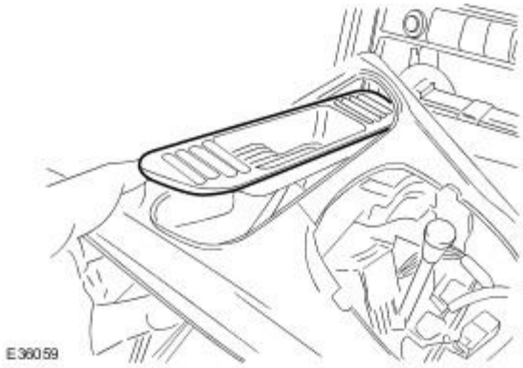

8. Remove oddments tray and remove veneer panel from console.

Installation

1. Position veneer panel on console.
2. Fit and fully seat oddments tray.
3. On convertible model, connect roof switch harness multiplug.
4. Route Sport mode and Cruise Control switches through panel aperture.
5. Fully seat veneer panel on console.
6. Position veneer panel clamp plates and fit and tighten securing screws.
7. Position gear selector surround finisher.
8. Fit and fully seat Sport mode and Cruise Control switches in finisher.
9. Finally fit gear selector surround finisher.
10. Move gear selector to position P.
11. Connect ground cable to battery terminal and fit battery cover. Refer to 86.15.15.

Instrument Panel and Console - Floor Console Stowage Compartment

Removal and Installation

Removal

All vehicles

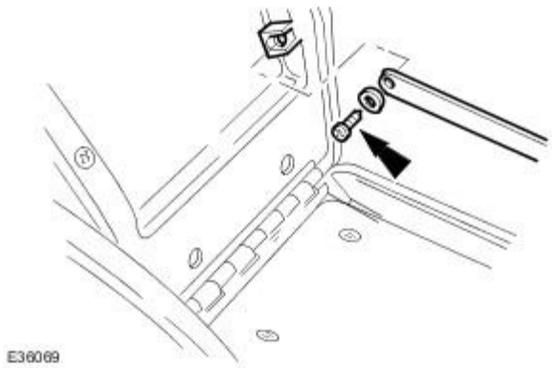

1. Remove floor console stowage compartment lid stay.

- Open the stowage compartment lid.
- Remove the lid stay securing screw.

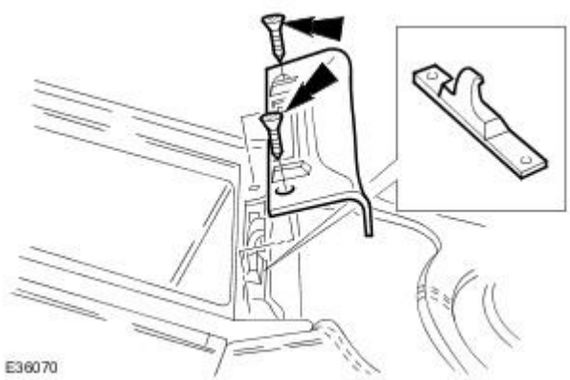

2. Remove the latch assembly.

- Remove the latch assembly securing screws.

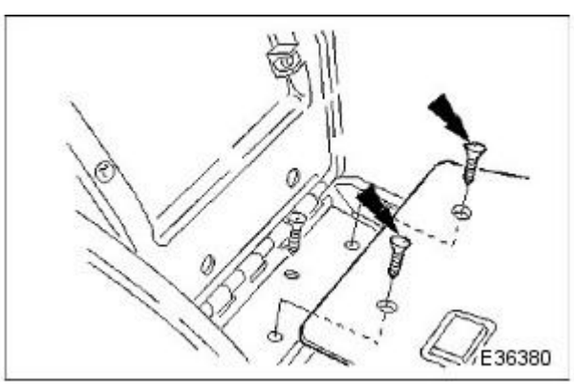

3. Displace and remove the liner.

- Remove the liner rear securing screws.

Vehicles with cordless cellular phone

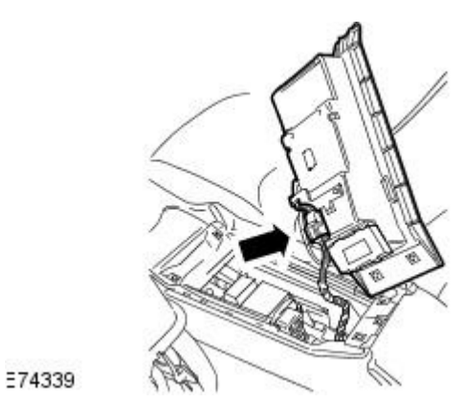

4. Disconnect the Bluetooth module electrical connector and remove liner.

Installation

1. To install, reverse the removal procedure.

Instrument Panel and Console - Floor Console Stowage Compartment Lid

Removal and Installation

Removal

1. Open glovebox lid.
2. Slacken and remove lid stay securing screw and remove stay from lid.

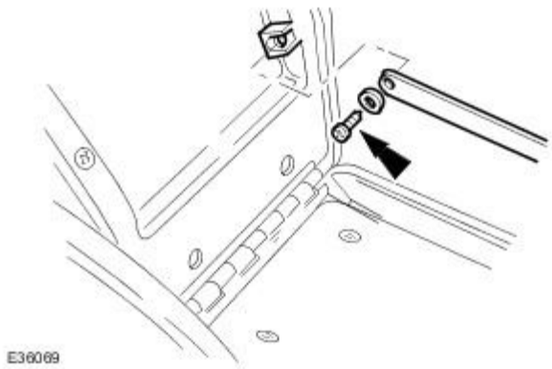

3. Slacken and remove glovebox latch securing screws and remove latch from glovebox.

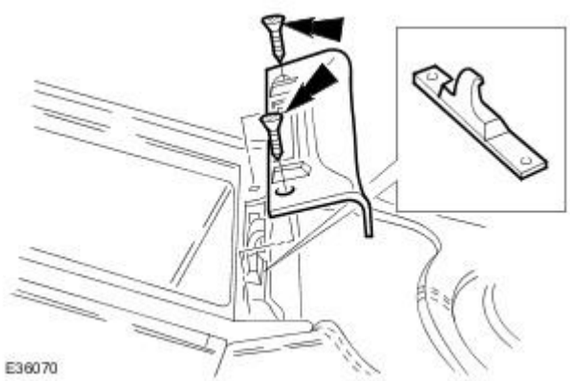

4. Slacken and remove glovebox liner rear securing screws and remove liner for access.

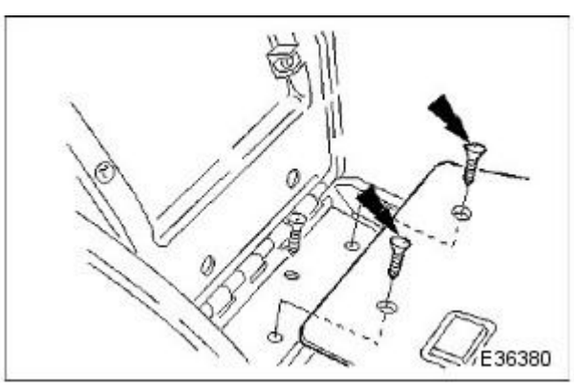

5. Slacken and remove remaining glovebox hinge securing screw.

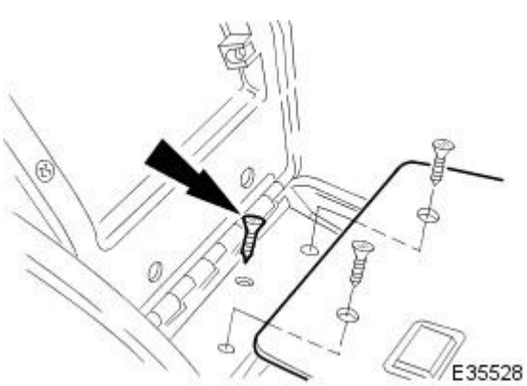

6. Slacken and remove screws securing hinge to lid and remove hinge.

Installation

1. Position hinge on console lid and fit and tighten securing screws.
2. Position glovebox lid on centre console and fit and tighten securing screw.
3. Fully seat liner in centre console and fit and tighten rear securing screws.
4. Fit glovebox latch to liner and fit and tighten securing screws.
5. Position glovebox to lid stay, fit and tighten securing screw and close glovebox lid.

Instrument Panel and Console - Glove Compartment

Removal and Installation

Removal

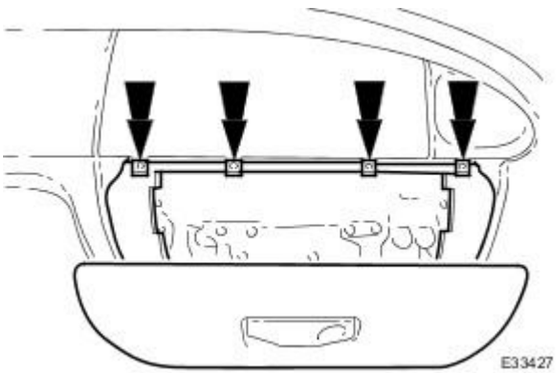

1. Open glove box lid and slacken and remove four screws securing liner to the fascia.

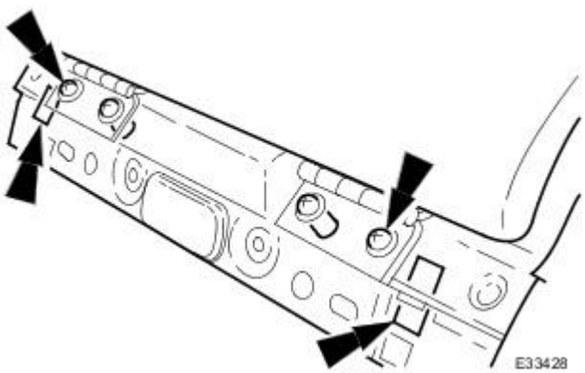

2. NOTE: Do not disturb the two inner screws as these are for glovebox alignment only.

   Slacken and remove two outer screws securing glovebox to cross-member.

   - Withdraw liner tangs and dowels from cross-member and separate liner.

3. Position glove box for access, disconnect footwell and glovebox lamp multiplugs and withdraw the glove box assembly.

Installation

1. Position glovebox at fascia cross-member and connect footwell and glovebox lamp multiplugs.
2. Locating plastic dowels in apertures, seat glovebox on cross-member.
3. Install but do not fully tighten lower securing screws.
4. Install but do not fully tighten glovebox upper securing screws.
5. Carefully close glovebox lid and align assembly with fascia.
6. Fully tighten all glovebox securing screws.

Published: 11-May-2011

Instrument Panel and Console - Glove Compartment Lid

Removal and Installation

Removal

1. Remove glovebox from fascia. Refer to 76.52.03
2. Move the glove box lid damper cord forward to release clip from lid.

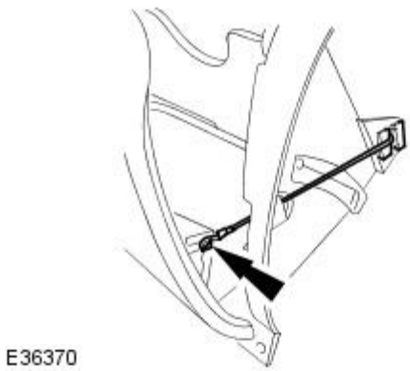

3. Remove glove box liner from lid.
4. Slacken and remove the four hinge securing nuts.
5. Carefully withdraw the lid.
6. Remove the hinges.

Installation

1. Position glove box lid and secure to hinges with four screws.
2. Fit damper cord mounting clip.
3. Position glovebox and connect footwell and glovebox lamp multiplugs.
4. Fit liner and secure top to fascia with four screws.
5. Close glove box lid.
6. Fit and tighten screws securing bottom of glovebox to lower fascia.
7. Slacken two inner screws at bottom of glovebox, adjust alignment of glovebox lid to liner and re-tighten screws.

Instrument Panel and Console - Instrument Cluster Finish Panel

Removal and Installation

Removal

1. Remove driver side underscuttle. Refer to 76.46.11.
2. Remove battery cover and disconnect ground cable from battery terminal. Refer to 86.15.19.
3. Slacken and remove the two veneer panel securing screws.

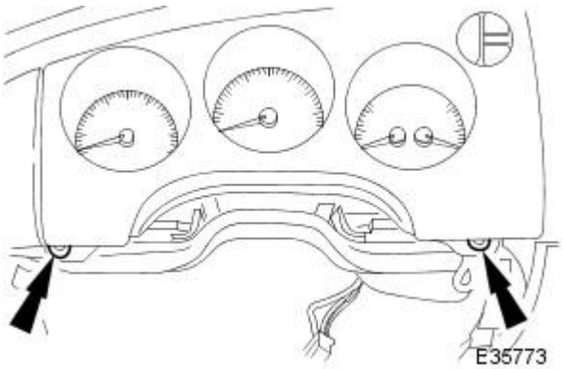

4. Withdraw veneer panel from fascia upper locating slots and disconnect trip computer switch multiplug.

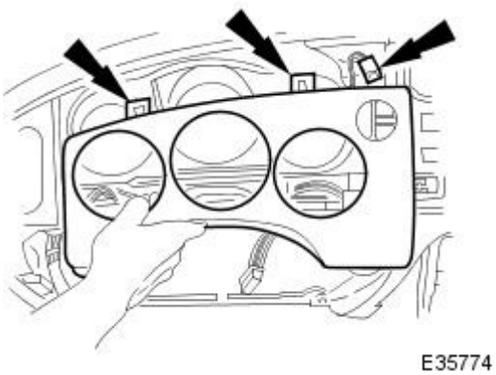

5. Position veneer panel for access and remove trip computer switch.

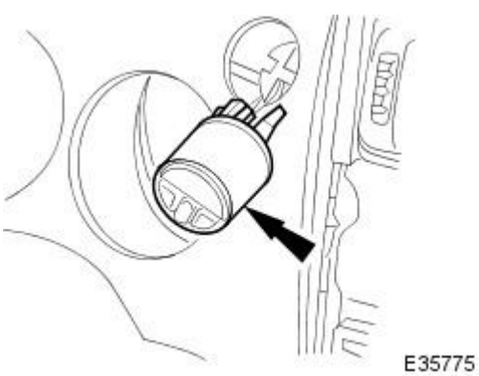

6. Slacken and remove instrument panel surround securing nuts and remove surround from veneer panel.

Installation

1. Align instrument surround with veneer panel and fit and tighten securing nuts.
2. Fit and fully seat trip computer switch in panel.
3. Position panel at fascia and connect trip computer switch harness multiplug.
4. Engage panel lugs in fascia upper slots and fit and tighten lower securing screws.
5. Fit driver side underscuttle. Refer to 76.46.11.
6. Fit ground cable onto battery terminal and fit battery cover. Refer to 86.15.15.

Instrument Panel and Console - Instrument Panel

Removal and Installation

Removal

1. Remove battery cover and disconnect earth lead from terminal. Refer to 86.15.15.
2. Remove glove box. Refer to 76.52.02.
3. Remove under-scuttle. Refer to 76.46.11.
4. Remove 'J' gate surround for access. Refer to 76.25.24.
5. Remove center console assembly. Refer to 76.25.01.
6. Remove radio console. Refer to 76.25.15.
7. Remove driver's air bag module. Refer to 76.73.39.
8. Remove steering wheel. Refer to 57.60.01.
9. Remove steering column upper and lower cowls. Refer to 76.46.03.
10. Remove front seats. Refer to 76.70.01.90.
11. Disconnect 'J' gate and gearshift interlock solenoid harness multiplugs.

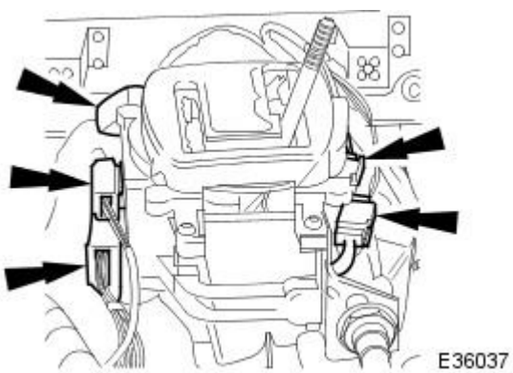

12. Detach and position 'J' gate for access.
    - Remove four nuts securing the 'J' gate assembly to the transmission tunnel.
    - Position 'J' gate assembly for access.

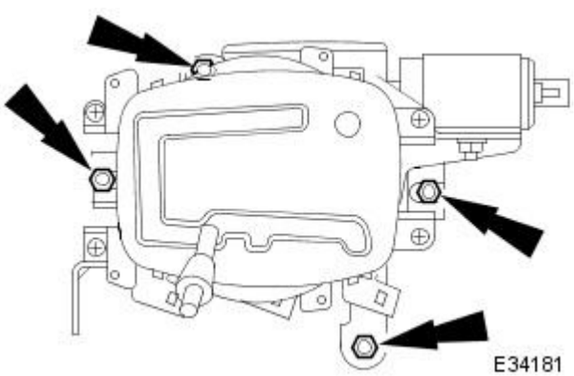

13. Remove fascia to tunnel securing nuts and bolts.
    1. Remove two nuts and one bolt securing each fascia to transmission tunnel side bracket and remove brackets.
    2. Remove two nuts securing fascia central bracket to transmission tunnel.

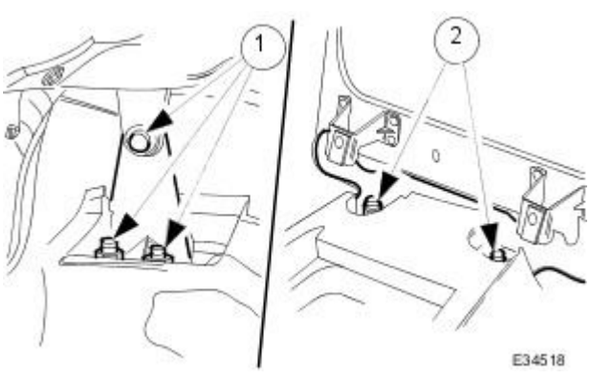

14. Remove left-hand 'A' post lower trim pad. Refer to 76.13.30.

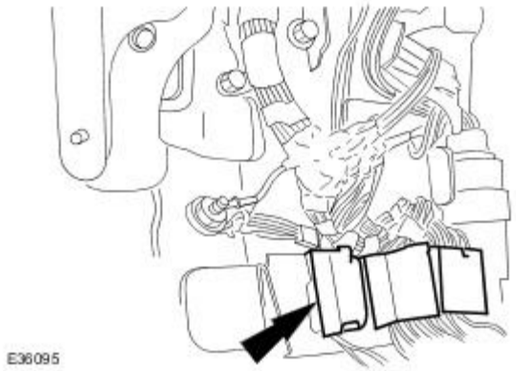

15. Disconnect fascia harness multiplug connectors at left-hand 'A' post.

1. Detach three fascia harness multiplugs from mounting bracket and disconnect and position them clear of obstructions ready for fascia removal.
2. Detach spare multiplug from mounting bracket and position clear of obstructions.

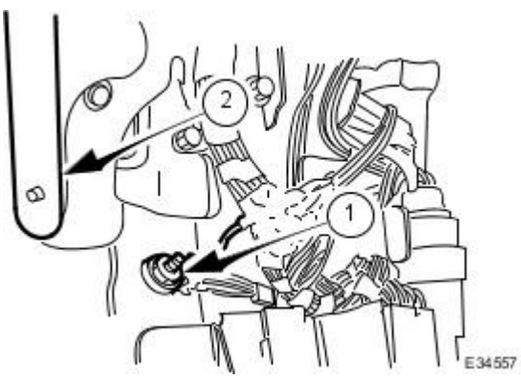

16. Disconnect cables from left-hand side of fascia.

1. Remove 'A' post earth cable securing nut and remove cable eyelets from stud.
2. Remove two nuts securing hood release lever assembly to fascia studs and position lever assembly and cable clear of fascia.

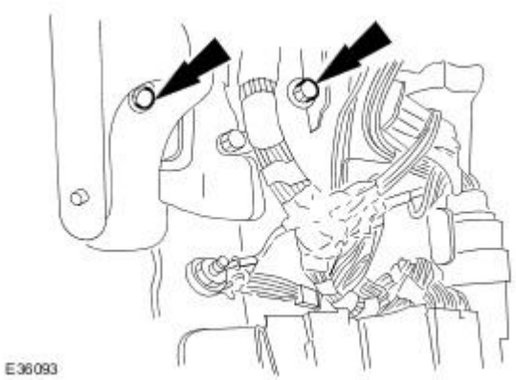

17. Remove two bolts securing fascia to left-hand 'A' post.

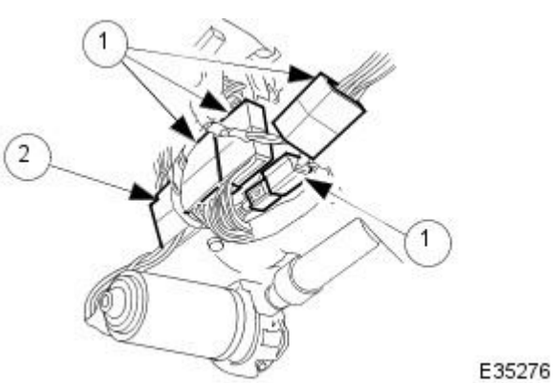

18. Disconnect steering column left-hand harness.

1. Detach the four harness rear multiplugs from mounting bracket and disconnect multiplugs.
2. Disconnect the front multiplug and position connector clear of bracket.

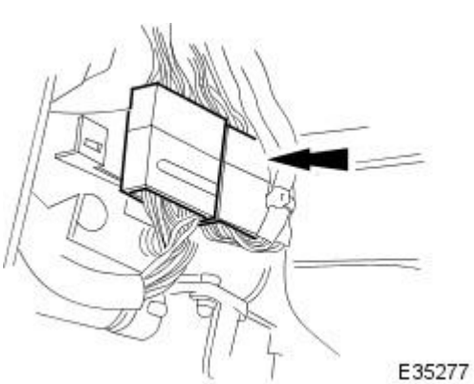

19. Disconnect steering column right-hand harness.

- Detach the two harness multiplugs from mounting bracket and disconnect them.

20. Ensure all column to fascia multiplugs are clear of projections.

21. Remove footwell lamp mounting bracket.

- Remove two screws securing the footwell lamp mounting bracket to the air conditioning duct and remove bracket.

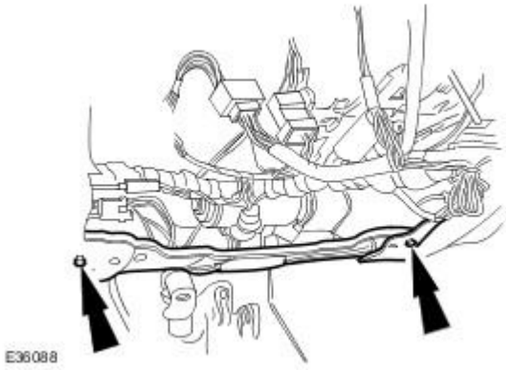

22. Position steering column for access.

1. Remove the steering column upper mounting bracket securing nuts.

- Move column down from mounting bracket and reposition for access.

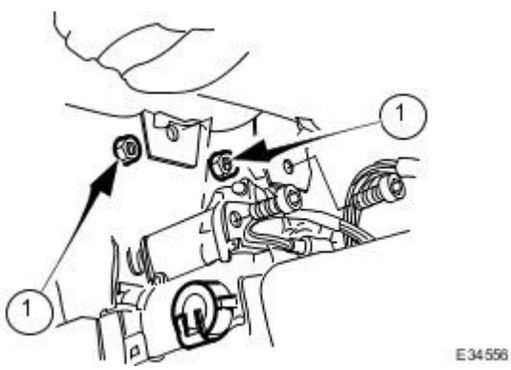

23. Remove right-hand 'A' post lower trim pad. Refer to 76.13.30.

24. Disconnect right-hand 'A' post earth cable.

- At right-hand 'A' post remove the earth cable securing nut and disconnect cable from the stud.

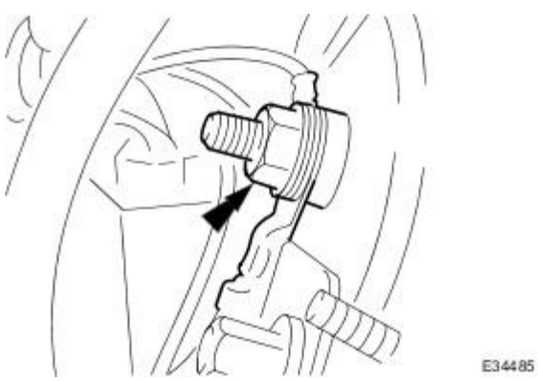

25. Disconnect multiplugs at right-hand 'A' post.

- Detach five fascia harness multiplugs from mounting bracket and disconnect and position them clear of projections.

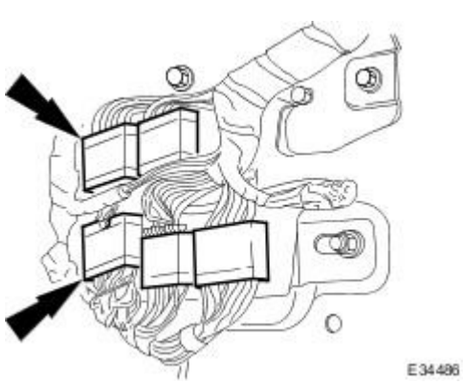

26. Disconnect RH fuse box power cable.

1. Remove cover from fascia right-hand fuse box and remove nut securing power cable to fuse box.

- Disconnect power cable and position clear of projections on fascia.

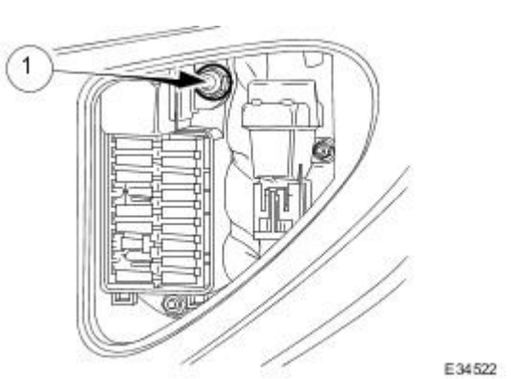

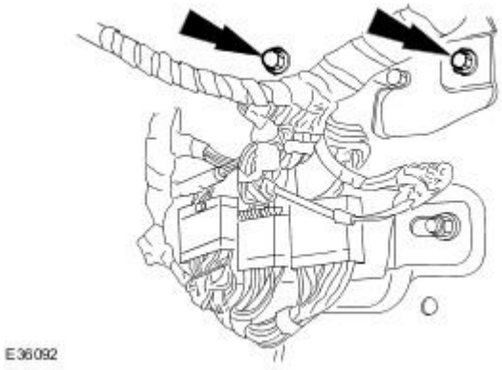

27. Remove two bolts securing fascia to right-hand 'A' post.

28. Remove fascia speakers and central trim cover.

- Remove fascia speaker covers and disconnect speaker harness multiplugs, remove speakers from fascia and place in protective area.

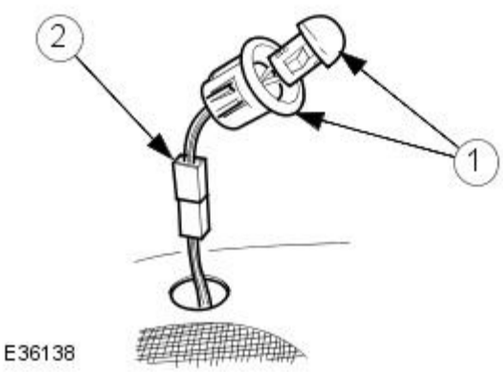

29. Remove solar sensor from fascia.

1. Ensuring that the fascia is protected, carefully prise the sensor upwards.
2. Disconnect the sensor harness multiplug, remove sensor unit from the fascia and place in protective area.

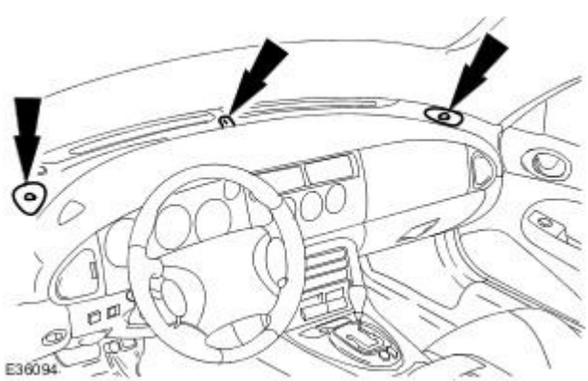

30. Remove the three screws securing upper fascia to bulkhead.

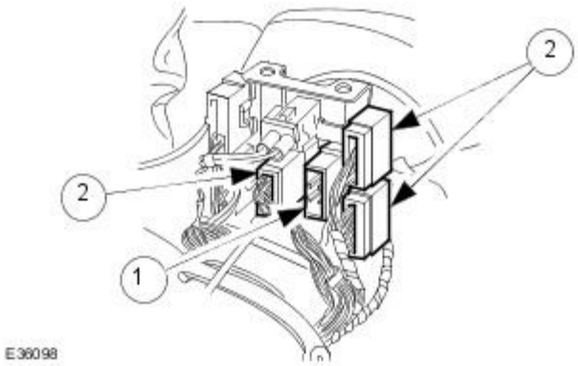

31. Disconnect left-hand harness at center console rear mounting bracket.

1. Detach spare central left multiplug from mounting and position clear of bracket.
2. Disconnect the three remaining left-hand harness multiplugs.

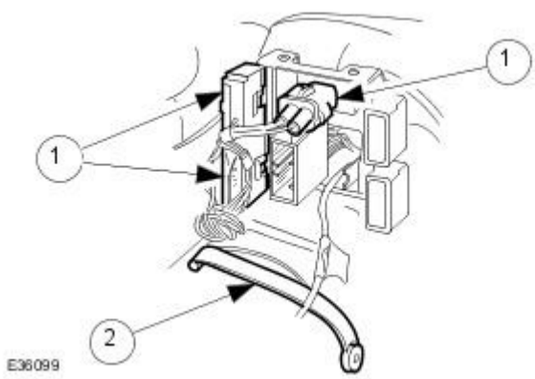

32. Disconnect right-hand harness multiplugs at center console rear mounting bracket.

1. Disconnect the three right-hand harness multiplugs and position clear of bracket.
2. Remove two rubber straps securing harnesses to tunnel.

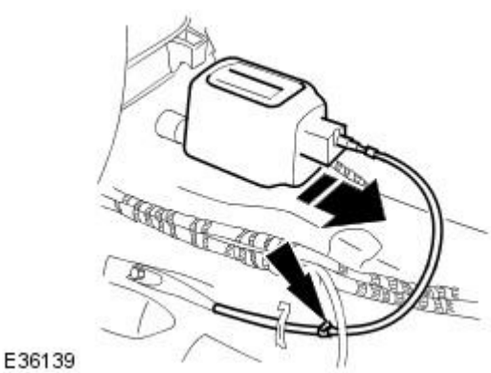

33. Position 'J' gate for access.

- Release stud and strap securing gear selector cable to tunnel and position 'J' gate for fascia removal.

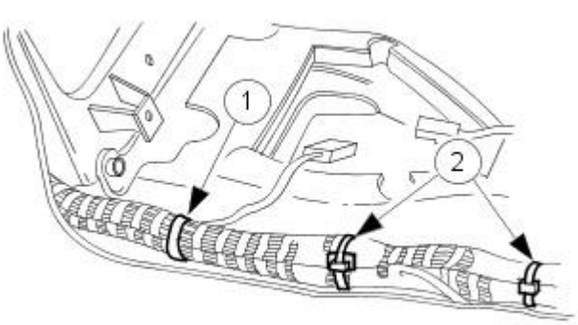

34. Detach harness from left-hand side of tunnel.

1. Fold back carpet from left-hand side of tunnel for access and cut through strap securing harness to ICE cable.
2. Release two fasteners securing harness to left-hand side of tunnel.

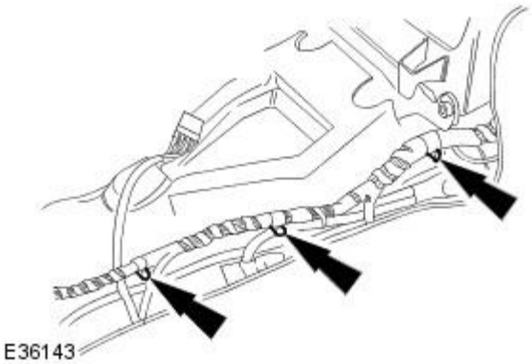

35. Detach harness from right-hand side of tunnel.

- Fold back carpet from right-hand side of tunnel for access and release three fasteners securing harness to side of tunnel.

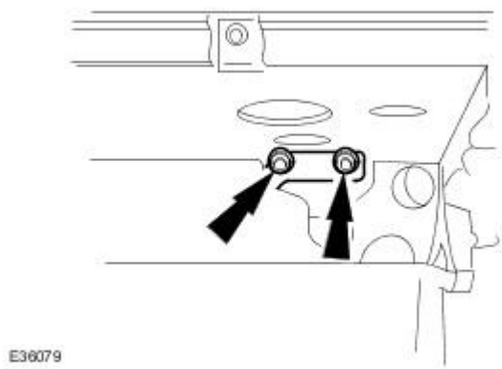

36. Via glove box aperture, remove two bolts securing fascia to bulkhead mounting bracket.

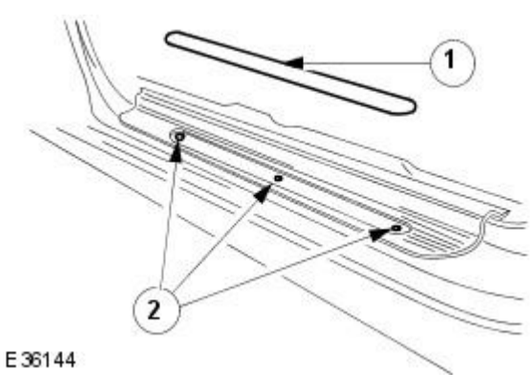

37. CAUTION: The treadplate finishers, can easily be deformed or otherwise damaged during removal.

Remove door sill treadplates.

1. Using a suitable thin 1 inch wide scraper, carefully lift the inscribed finisher.
2. Remove the treadplate retaining screws and remove the treadplate.
3. Repeat procedure to remove opposite side treadplate.

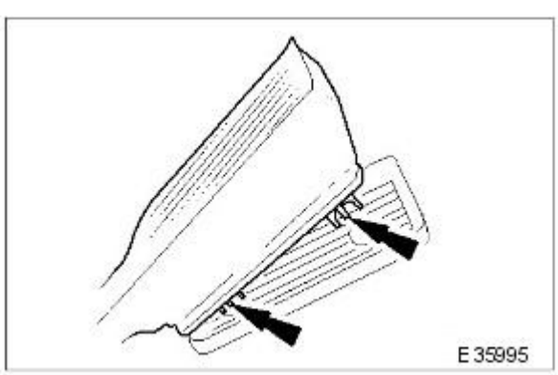

38. Exercising care, use a thin blade to release driver footrest tangs and spigots from mounting plate.

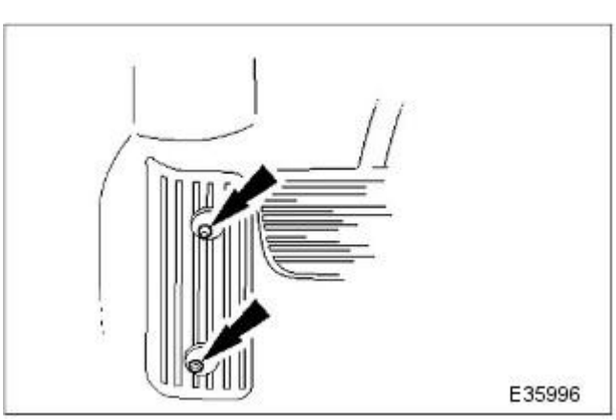

39. Remove footrest mounting plate securing bolts and remove mounting from vehicle.

40. Remove toeboard fastener.

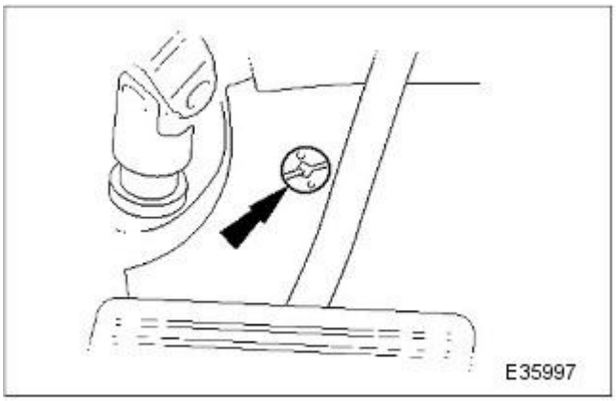

41. Release carpet from around kickdown switch and toeboard area.

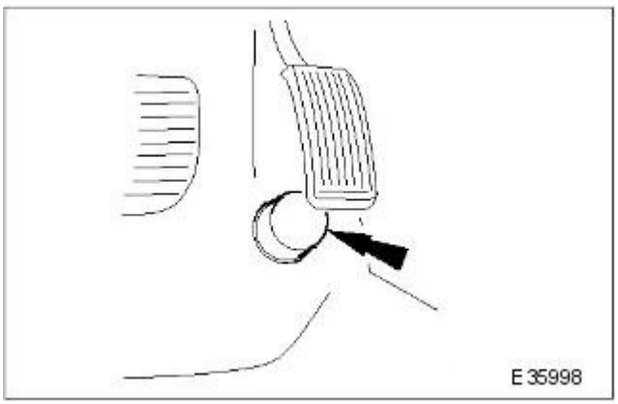

42. Remove and discard fastener securing carpet at fascia/console area.

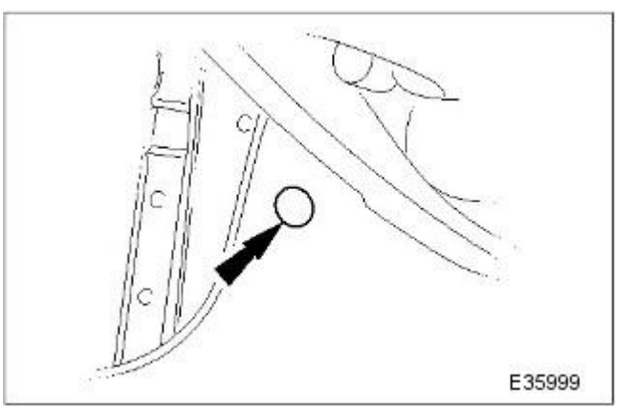

43. Remove handbrake lever trim and ensure that lever is left in fully upright position. Refer to 76.13.63.

44. Withdraw draught welt and release carpet retaining clips from driver door aperture flange.

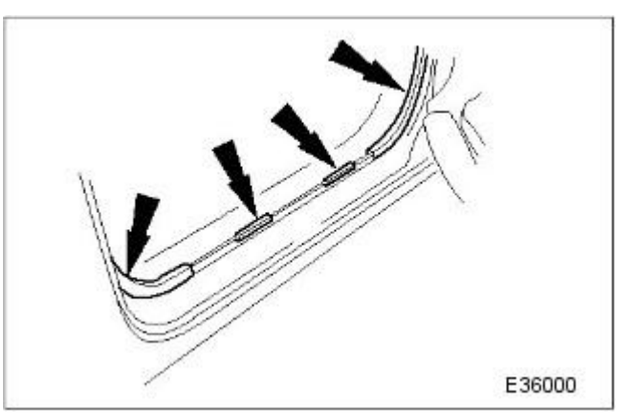

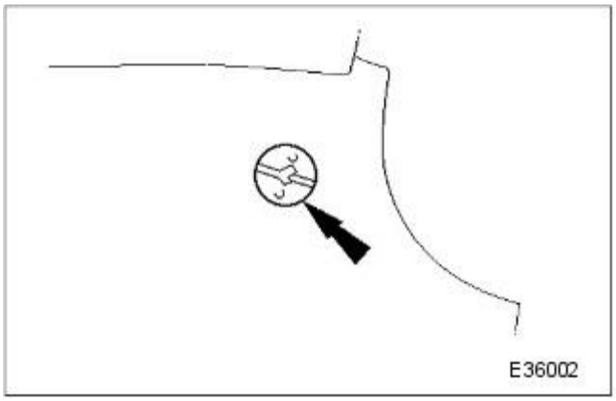

45. Remove 1/4 turn fastener from passenger side toeboard.

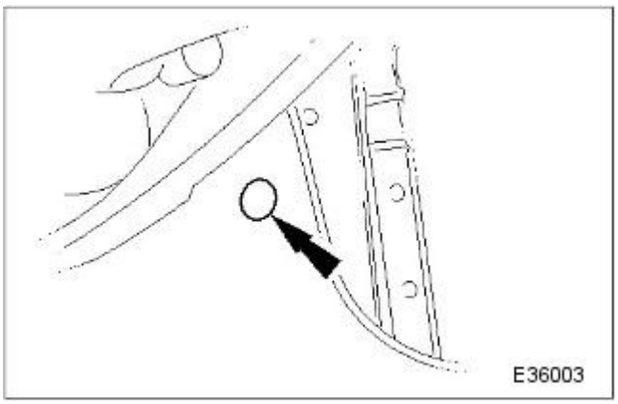

46. Remove and discard fastener on passenger side fascia/console area.

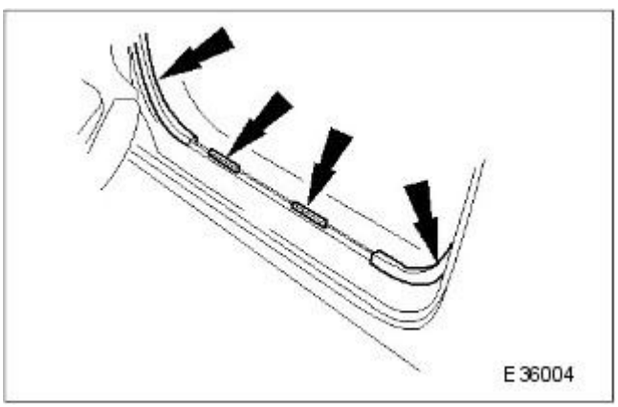

47. Withdraw draught welt and release carpet retaining clips from passenger door aperture flange.

48. At each side, lift carpet and fold to rear quarters.

49. Disconnect handbrake switch harness multiplug.

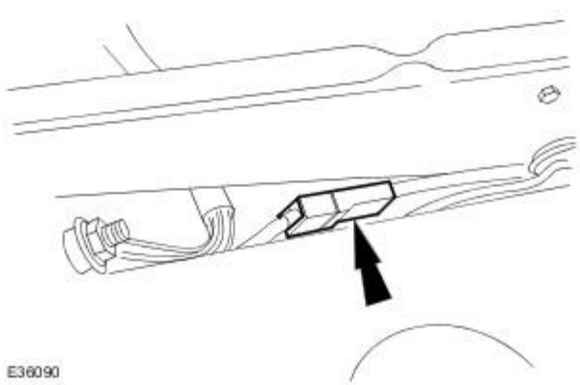

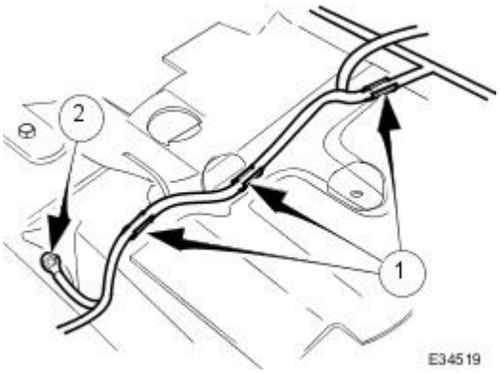

50. Detach seat harness and disconnect earth cable.

1. Release fasteners securing seat harness to floor.
2. Remove nut securing the earth cable eyelet to the floor stud and remove cable from stud.

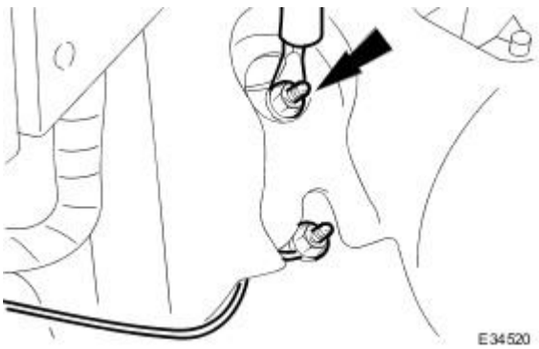

51. At each side of tunnel, remove nut securing fascia harness earth cables and remove earth eyelets from studs.

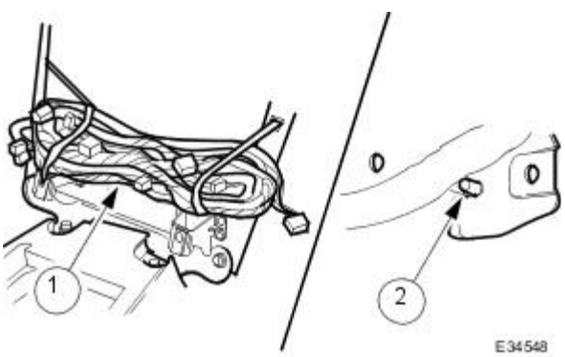

52. Remove fascia from vehicle.

1. Withdraw harnesses from each side of tunnel and coil and strap them to the ICE console mounting bracket.
2. With assistance, carefully withdraw the fascia rearwards off the support dowels, guiding the power cable through the right-hand fuse box.

Installation

1. With assistance, align the fascia with the support dowels and position the earth cable in the right-hand fuse box.

2. With assistance, ensuring multiplugs and harnesses are not trapped or obstructed, carefully press fascia forward squarely onto dowels.

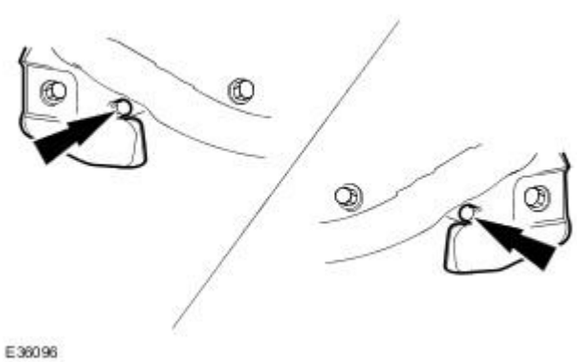

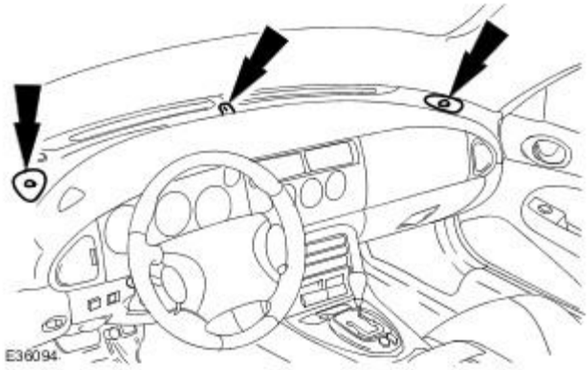

3. Install three screws securing upper fascia to the bulkhead.

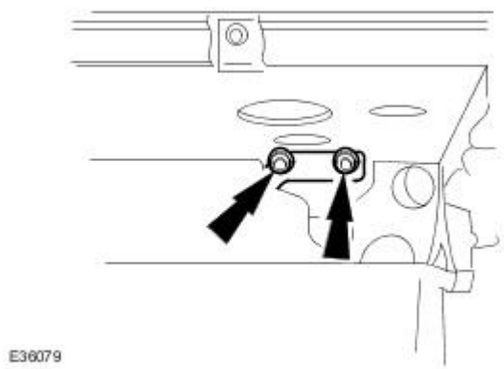

4. Via glove box aperture, install two bolts securing fascia to bulkhead mounting bracket.

5. Install four bolts securing fascia to 'A' posts.

6. Install fascia harnesses on tunnel.

- Remove strapping temporarily securing harnesses to fascia center bracket.
- Route harnesses rearwards along respective sides of tunnel.
- Connect harness earth cable eyelets to tunnel studs and install eyelet securing nuts.

7. At left-hand side of tunnel, install new tie strap to secure ICE cable to harness.

8. Install seat harnesses.

- Route seat harnesses to their respective positions.
- Connect harness earth eyelets to floor studs and install earth securing nuts.

9. Install fasteners securing fascia and seat harnesses on tunnel and floor.

10. Connect handbrake switch harness multiplug.

11. Position and fit carpets.

- Roll carpets forward into position.
- Install handbrake trim cover.
- Secure trim cover fastener.
- Position carpet at each toeboard.
- Install clips securing carpet at door apertures.
- Install new carpet fasteners at toe-board and tunnel locations.
- Install driver footrest.

12. Install draught welts and treadplates.

- Press draught welt onto door aperture flange.
- Align treadplate on door sill and fit and tighten four treadplate securing screws.
- Ensure treadplate is clean and dry.
- If treadplate finisher is being renewed, peel protective backing from adhesive.
- Align finisher and press firmly into place.
- Repeat procedure to install opposite side draught welt and

treadplate.

13. Position 'J' gate and fit selector cable securing strap and stud to tunnel.

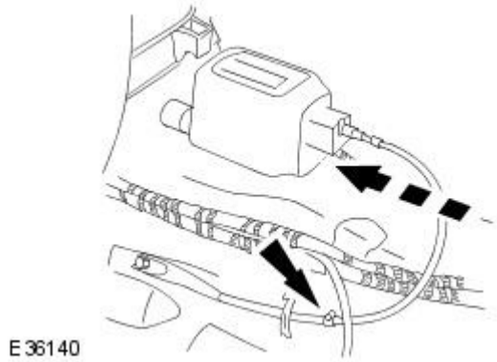

14. Install fascia harness multiplugs at center console rear mounting bracket.

1. Install spare connector at center left-hand position.
2. Connect the six fascia harness multiplugs.

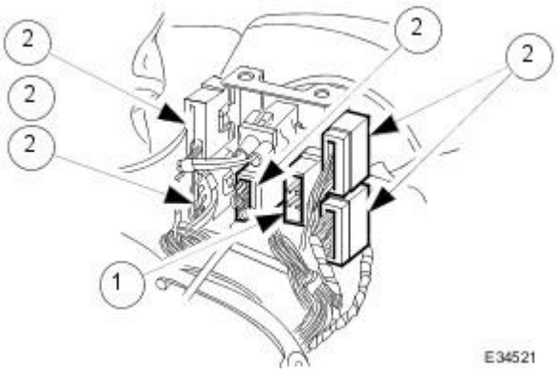

15. Install solar sensor and speakers to fascia.

1. Connect solar sensor to fascia harness multiplug and carefully install sensor in fascia.
2. Connect speakers to ICE harness multiplugs and install speakers in fascia.

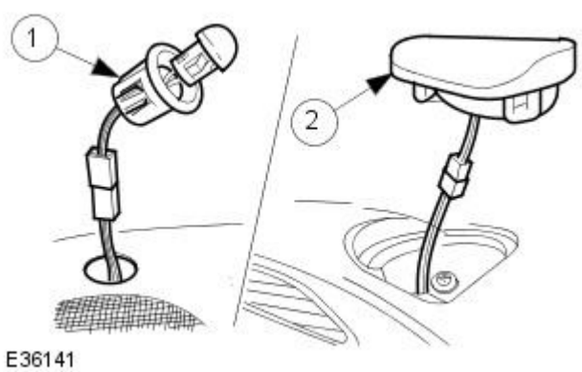

16. Connect power cable to fascia.

1. At right-hand fuse box, position power cable eyelet on fuse box stud and fit and install cable securing nut.

- Install fuse box cover.

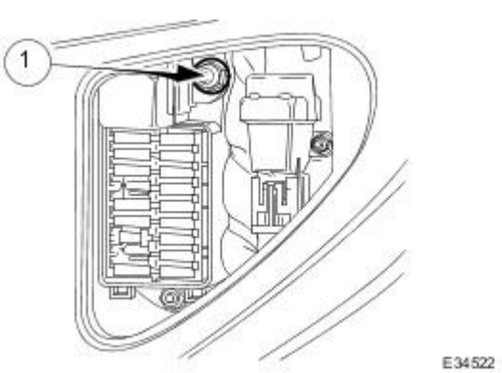

17. Connect right-hand 'A' post multiplugs and earth cable.

- At right-hand lower 'A' post, connect fascia harness and PI harness multiplugs and install multiplugs on mounting brackets.
- Position PI harness earth cable eyelet on body stud and install securing nut.

18. Install steering column.

- Position steering column in mounting bracket.
- Position yoke on bracket studs and install securing nuts.

19. Position footwell lamp mounting bracket and secure with screws to air

conditioning duct.

20. Connect steering column switch gear harness and column harness.

- Connect steering column switchgear harness and column harness multiplugs and install multiplugs on mounting bracket.

21. Position bonnet release lever assembly on 'A' post studs and install securing nuts.

22. Position fascia harness earth cable eyelets on 'A' post stud and fit and install securing nut.

23. Install spare harness multiplug on mounting bracket.

24. Install multiplugs at left-hand 'A' post.

- Connect the three fascia harness multiplugs and position on mounting bracket.
- Install spare multiplug on upper bracket.

25. Install two bolts securing fascia center bracket to the transmission tunnel.

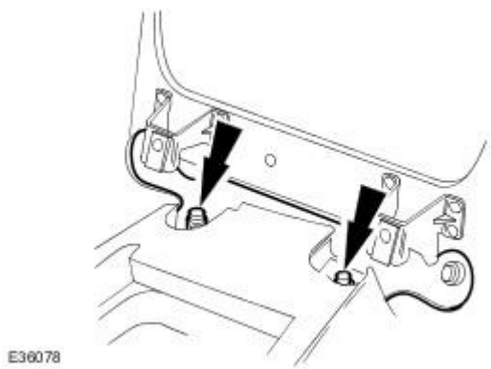

26. Position fascia to transmission tunnel side brackets and install retaining bolts.

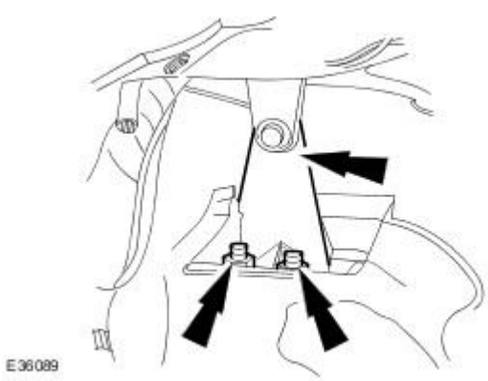

27. Position 'J' gate and install four securing nuts.

28. Connect the 'J' gate harness and gearshift solenoid harness multiplugs.

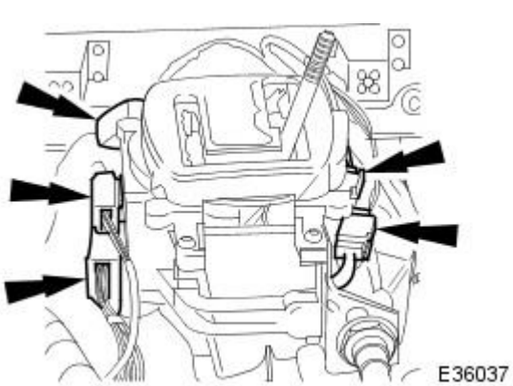

29. Install center console assembly. Refer to procedures in this section.

30. Install front seats. Refer to 76.70.01.90.

31. Install 'A' post trim pads. Refer to 76.13.30.

32. Install steering column cowls. Refer to 76.46.03.

33. Install steering wheel. Refer to 57.60.01.

34. Install driver's air bag. Refer to 76.73.39.

35. Install radio console. Refer to 76.25.15

36. Install 'J' gate surround. Refer to 76.25.24.

37. Install dash liner. Refer to 76.46.01.90 .

38. Install glove box. Refer to 76.52.02.

39. Connect earth cable to battery terminal and install battery cover. Refer to 86.15.15.

40. Remove protective film from renewed treadplate finishers.

Instrument Panel and Console - Instrument Panel Finish Panel

Removal and Installation

Removal

1. WARNING: FOLLOWING REMOVAL OF THE PASSENGER AIR BAG DEPLOYMENT DOOR, NEW RETAINING CLIPS MUST ALWAYS BE FITTED.

Open Glovebox lid.

2. Withdraw passenger air bag deployment door for access. Refer to 76.73.37.

3. Using a thin plastic lever, carefully release centre vent veneer panel tangs from fascia clips.

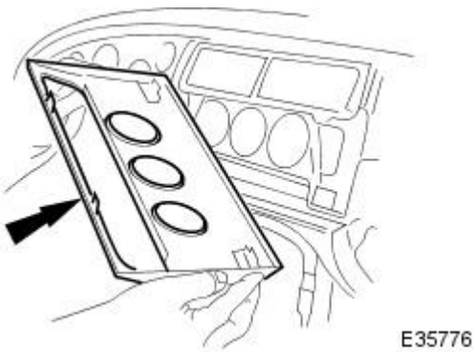

4. Remove and discard centre vent veneer panel securing clips.

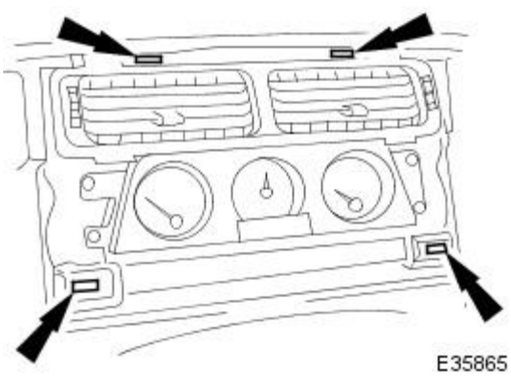

Installation

1. Fit and fully seat new veneer panel securing clips in fascia.

2. WARNING: NEW PASSENGER AIR BAG DEPLOYMENT DOOR, RETAINING CLIPS MUST ALWAYS BE FITTED.

Fit and fully seat veneer panel in securing clips.

3. Fit passenger air bag deployment door. Refer to 76.73.37.

4. Close glovebox lid.

Instrument Panel and Console - Instrument Panel Lower Trim Panel

Removal and Installation

Removal

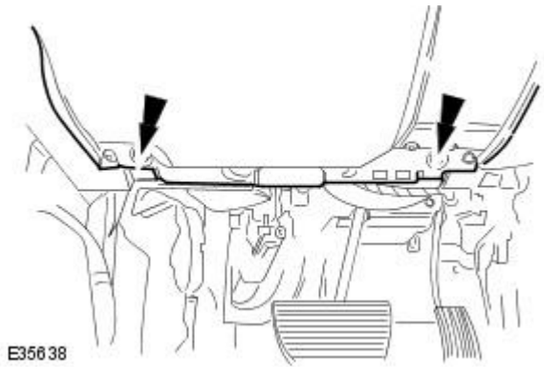

1. Remove battery cover and disconnect earth lead from terminal.
2. Slacken and remove the two screws securing the lower underscuttle to the fascia panel cross-member.

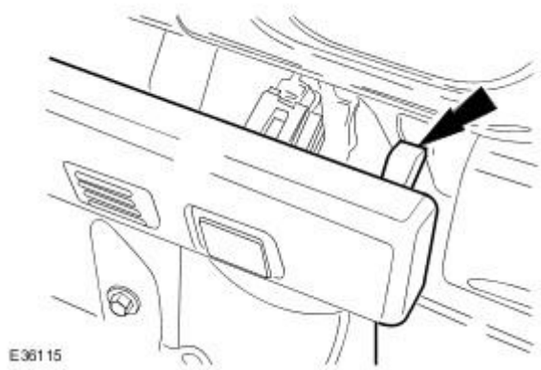

3. Withdraw the underscuttle upper fasteners from their locations in the fascia panel.

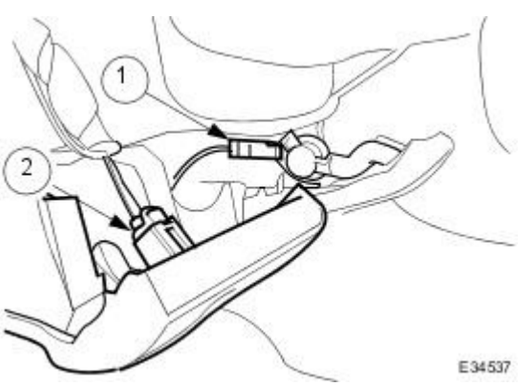

4. Position the underscuttle rearwards for access.
5. Disconnect harness multiplugs and reposition underscuttle.
    1. Disconnect air conditioning aspirator harness multiplug.
    2. Disconnect valet switch harness multiplug.

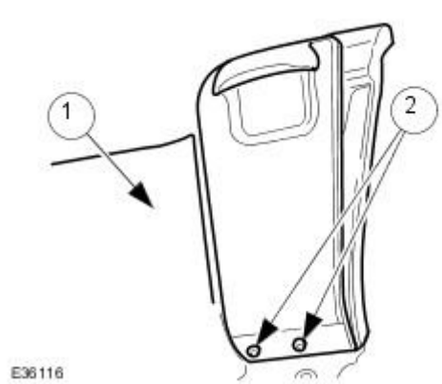

6. Remove stowage compartment lid.
    1. Position underscuttle for access.
    2. Slacken and remove two screws securing the stowage compartment lid to the underscuttle and remove the lid.

7. Release the valet switch securing tangs and remove the switch.

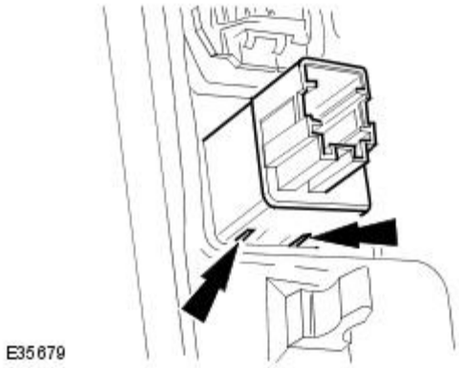

8. Remove air conditioning aspirator.

1. Slacken and remove the two nuts securing the air conditioning aspirator mounting bracket to the vent and remove the aspirator.

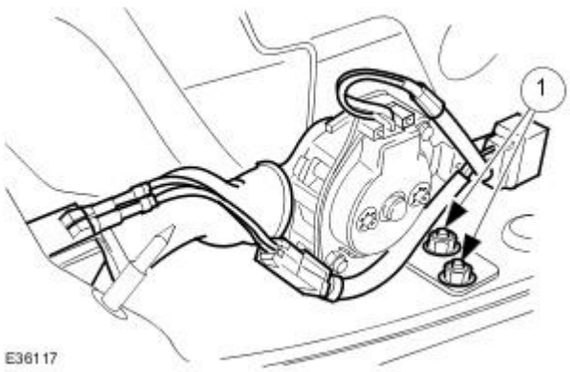

9. Release the aspirator vent securing tangs and remove the vent from the underscuttle.

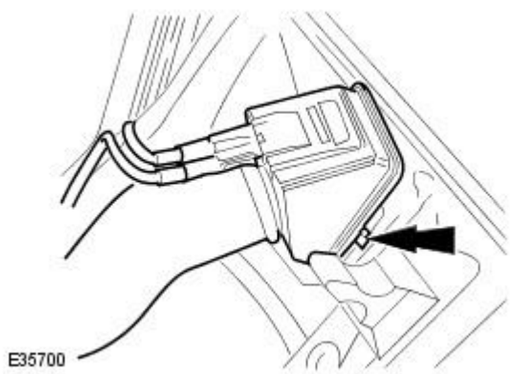

10. Remove the underscuttle from the vehicle.

Installation

1. Fit components to underscuttle.

- Fit and fully seat air conditioning aspirator vents to underscuttle.
- Fit and fully seat aspirator mounting bracket onto vent studs and fit and tighten bracket securing nuts.
- Fit stowage compartment lid and fit and tighten securing screws.

2. Fit underscuttle to vehicle.

- Position underscuttle below fascia.
- Connect valet switch, and air conditioning aspirator harness multiplugs.
- Position underscuttle and seat upper fasteners.
- Position underscuttle on lower cross-member and fit and tighten the two securing screws.

3. Connect battery earth lead and fit battery cover. Refer to 86.15.15.

Instrument Panel and Console - Overhead Console

Removal and Installation

Removal

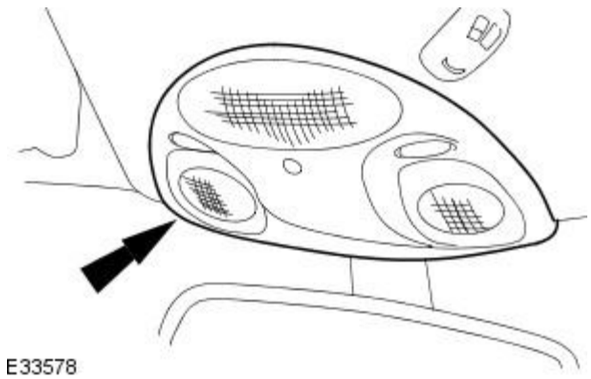

1. Disconnect the battery ground cable.
2. Detach the roof console.
   - Release the retaining clips.

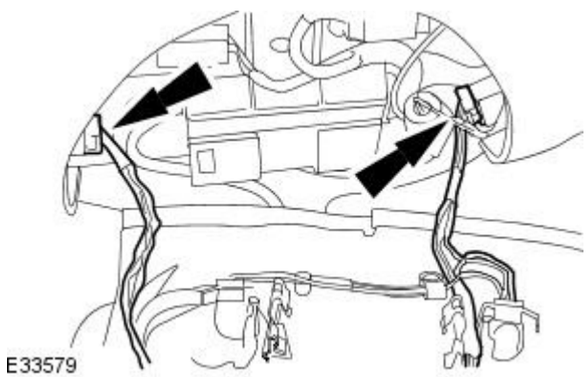

3. Remove the roof console.
   - Disconnect the roof console electrical connectors.

Installation

• NOTE: Make sure that no pressure is applied to the mesh grille.

1. To install, reverse the removal procedure.
2. Carry out the battery reconnection procedure. For additional information, refer toSection 414-01 Battery, Mounting and Cables.

Instrument Panel and Console - Rear Cup Holder

Removal and Installation

Removal

1. Open centre console glove box lid.
2. Slacken and remove screw securing check arm to glovebox lid.

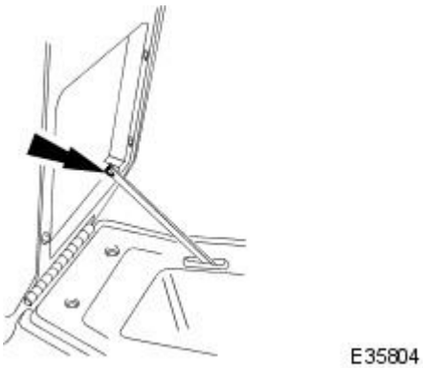

3. Slacken and remove two screws securing glove box lid to console and remove lid from console.

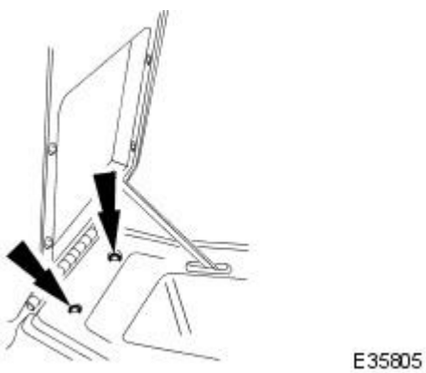

4. Operate latch to release the cup holder lid.
5. Slacken and remove the ten screws securing inner finisher to glovebox lid.

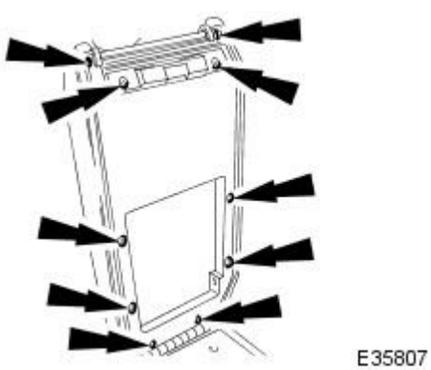

6. Remove inner finisher and hinge from glove box lid.
7. Slacken and remove cup holder latch securing screw and remove latch assembly.

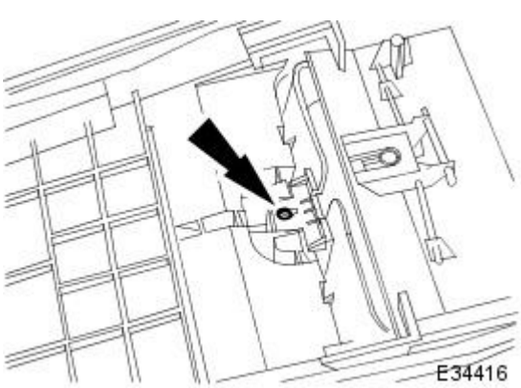

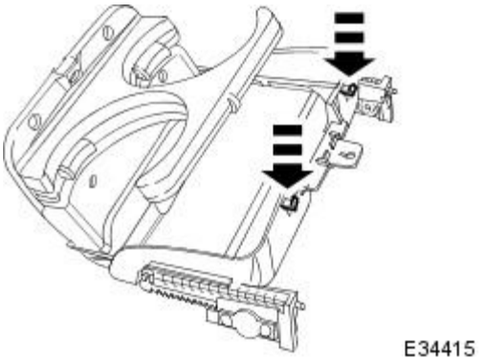

8. Open cupholder, depress tang each side of latch location and withdraw cupholder assembly. from base.

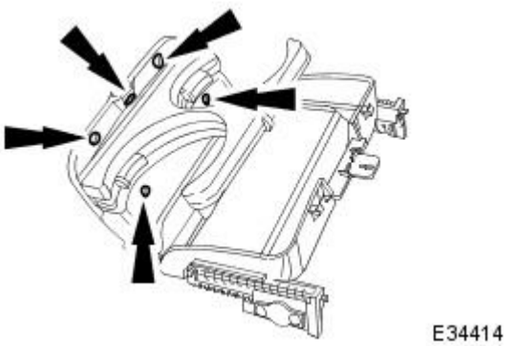

9. Slacken and remove the five cup holder lid trim panel securing screws and remove panel from lid by releasing lower edge and withdrawing upwards.

Installation

1. Fit and fully seat trim panel to cup holder lid ensuring that panel hook engages lid and panel engages lid damper wire.
2. Fit and tighten screws securing trim panel to cup holder lid.
3. Fit and fully seat cupholder and trim panel assembly to glove box lid.
4. Position cup holder latch and fit and tighten securing screw.
5. Fit hinge to glove box lid.
6. Fit and fully seat inner finisher to glove box lid and fit and tighten securing screws.
7. Close cup holder lid, position glove box lid assembly on centre console. and fit and tighten securing screws.
8. Close centre console glove box lid.

Instrument Panel and Console - Steering Column Lower Shroud

Removal and Installation

Removal

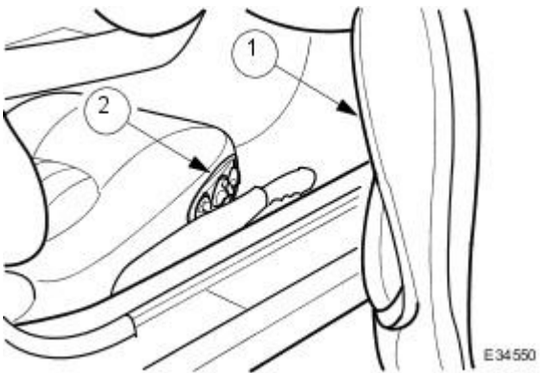

1. Move the driver's seat rearwards.

1. Open driver's door and ensure that it remains open.
2. On driver's seat switch pack, move front switch rearwards to traverse driver's seat to the rear.

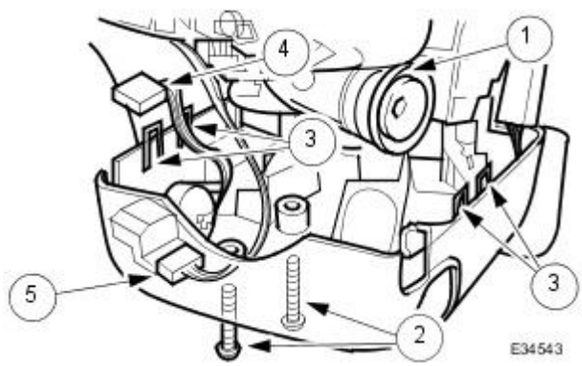

2. Remove the lower cowl from the steering column.

1. Remove key from ignition switch.
2. Slacken and remove cowl securing screws.
3. Separate lower cowl from upper cowl (four tangs) and move lower cowl forward to access multiplugs.
4. Disconnect the rheostat multiplug.
5. Disconnect the column adjustment harness multiplug.

- Move lower cowl clear of steering column.

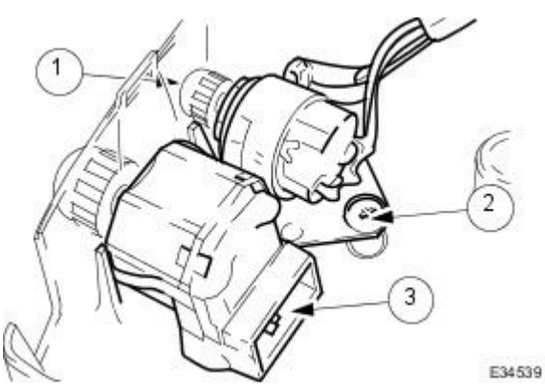

3. Remove the rheostat from the cowl.

1. Remove adjusting knob from rheostat.
2. Slacken and remove rheostat securing screw.
3. Move retaining tangs away from the column adjustment switch and release the switch from the lower cowl.

- Remove lower cowl from the steering column.

Installation

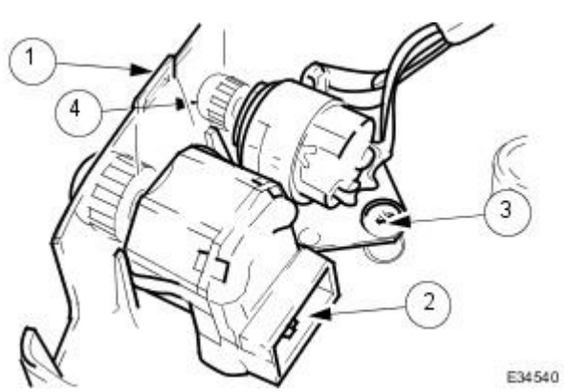

1. Fit rheostat and column switch to the lower cowl.

1. Position lower cowl to front of steering column.
2. Fit and fully seat column adjustment switch to cowl ensuring that retaining tangs fully engage.
3. Position rheostat in cowl and fit and tighten securing screws.
4. Fit and fully seat rheostat adjusting knob.

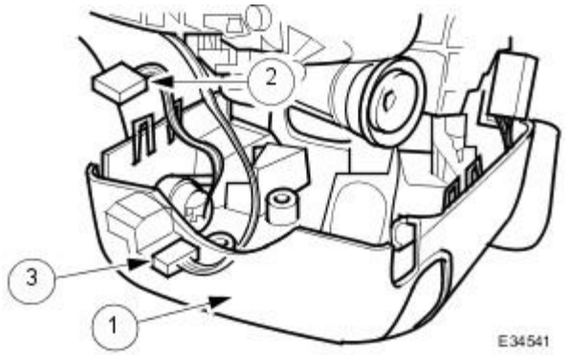

2. Connect multiplugs.

1. Position cowl to facilitate re-connection of multiplugs.
2. Connect rheostat harness multiplug.
3. Connect column adjustment harness multiplug.

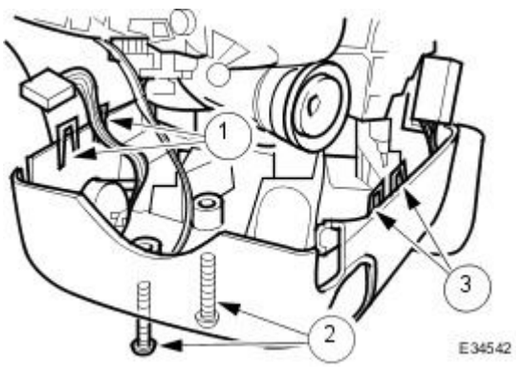

3. Fit lower cowl.

1. Locating four dowels, fit lower cowl to upper cowl.
2. Fit and tighten cowl securing screws.

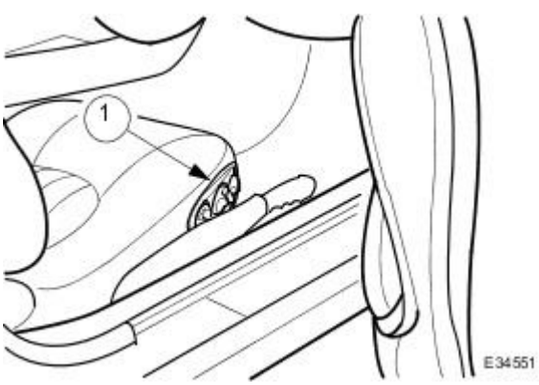

4. Re-position driver's seat.

1. On driver's seat switch pack move front switch forward to return seat to original position.

- Shut driver's door.

Handles, Locks, Latches and Entry Systems - Handles, Locks, Latches and Entry Systems

Description and Operation

Central Locking System

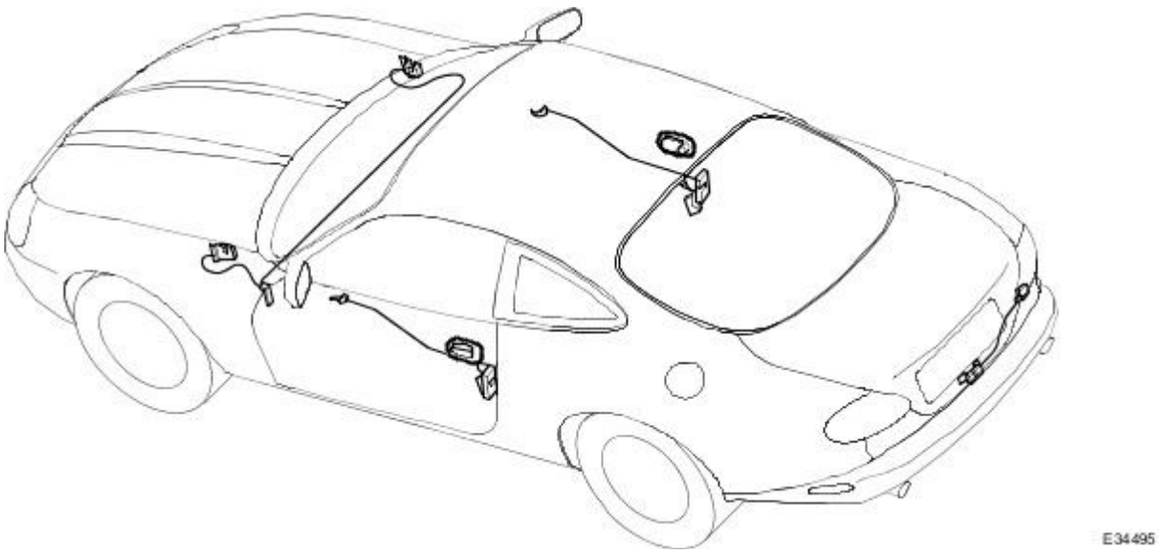

The central locking system employs single key access to the driver's door, trunk lid and ignition switch/steering column lock. An additional green headed valet or parking services key permits access via the driver's door, and ignition/start-up, but denies access to the trunk and glovebox.

A valet switch located in the underscuttle on the outboard side of the steering column, precludes normal internal access to the trunk.

When the vehicle is not locked, each door catch can be externally released by the corresponding door handle which operates via a single rod. When unlocked, or 'single action' locked, the door catches can also be internally released by the interior handles, each of which operates via a single cable. Use of either key in the external door barrel, operates the lock via a short rod to provide locking of the door latch. These locking functions can also be achieved by use of the remote transmitter.

The trunk lid can be independently unlocked via a switch located on the driver's side underscuttle. This will only operate at vehicle speeds up to 8 km/h (5 mph).

External Trunk Lock

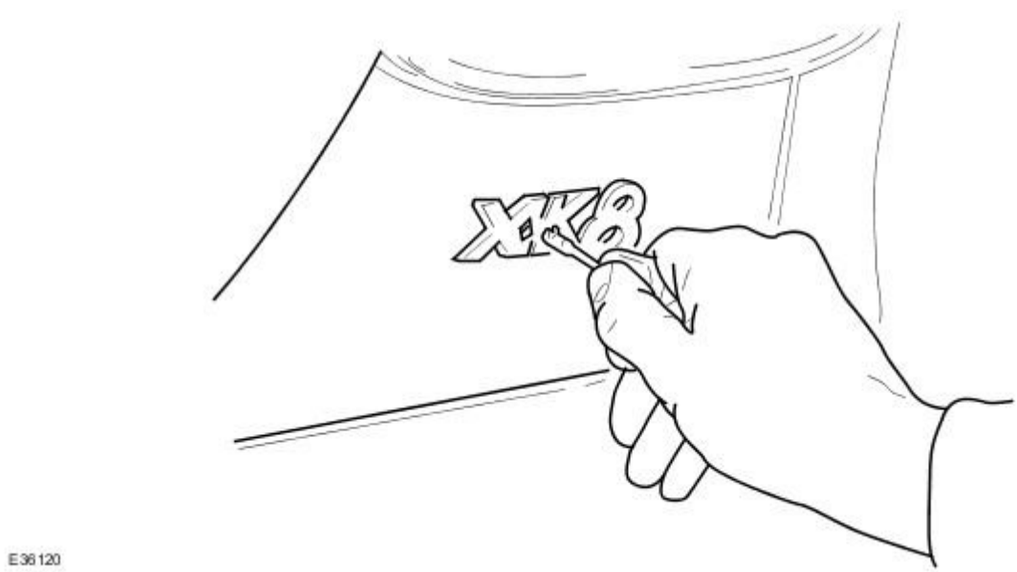

A lock barrel located between the X and K of the XK8 badge on the RH side of the trunk rear panel provides external access to the trunk via the black-headed key only.

Internal Trunk Release and Filler Flap Emergency Release

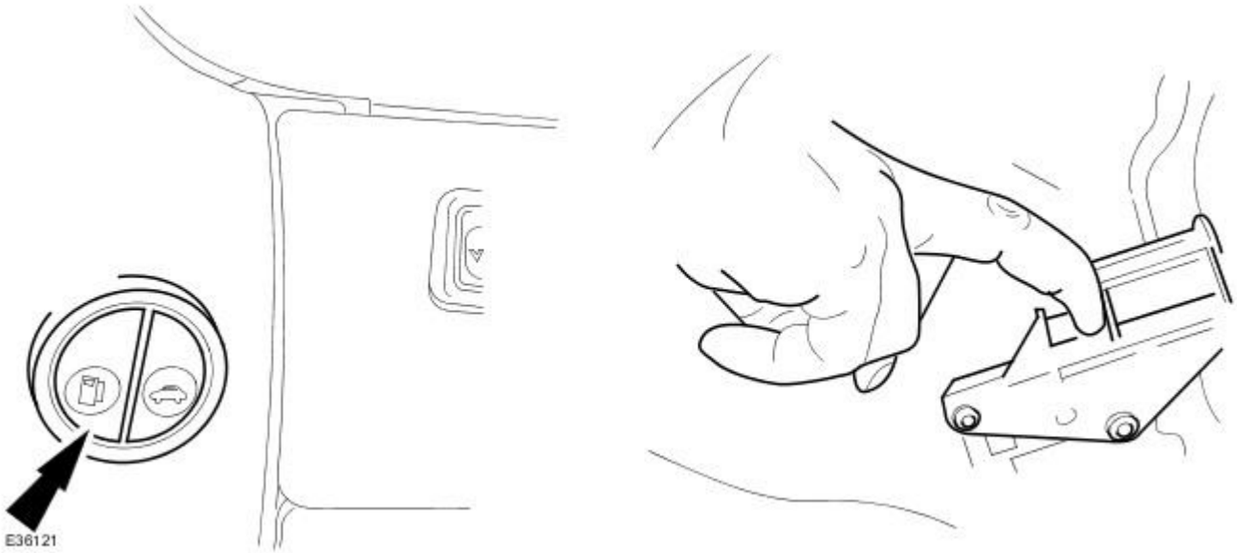

The fuel filler flap is released via a switch located on the driver's underscuttle. This switch will only operate if the engine is not running and the vehicle is unlocked, or the ignition is in position I or II.

An emergency filler flap release lever is accessed by removing the LH side trunk lining below the filler.

Key Operation

To 'single action' lock or unlock the vehicle, the key is inserted in the door lock, turned towards the front or rear of the vehicle respectively, and released. Holding the key in the lock position will close all windows, and on convertible models, will also raise the top. Releasing the key stops all operations. 'Single action' locking of the vehicle locks both doors, the trunk lid and the fuel filler flap, and sets the alarm system.

A 'superlocking' function deadlocks both doors, preventing door opening from the interior, and provides all of the above functions. To raise the convertible top however, the key must again be held in the 'lock' position. To 'superlock' the vehicle, the key is inserted in the door lock and turned to the unlock position, then within three seconds, turned to the lock position and released.

Remote Operation

Remote Central Locking Transmitter Unit

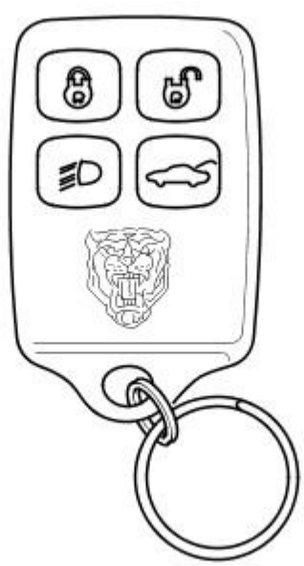

A four-button transmitter unit provides for remote controlled central locking of the vehicle.

The button bearing a red closed padlock symbol locks the vehicle and arms the security system. To remote 'single action' lock, the transmitter is pointed towards the vehicle and this button is pressed and released. To 'superlock' the vehicle, the above operation is repeated within three seconds. This function can also be used to remote close any windows. Completion of 'superlocking' is indicated by an audible 'chirp' from the security system and a single flash from the direction indicators. The vehicle is unlocked and the security system disarmed by pressing the button with the open padlock symbol.

The trunk lock can also be remotely released by operating the button bearing the trunk lid open symbol.

The button with dipped headlamp symbol is for emergency use. When depressed three times within three seconds, it switches the headlamps on for 25 seconds and operates the vehicle alarm 5 times.

Handles, Locks, Latches and Entry Systems - Door Ajar Switch

Removal and Installation

Removal

1. Turn ignition key to position II.
2. Motor door glass to fully raised position.
3. Turn ignition key to position O.
4. Remove battery cover and disconnect ground cable from battery terminal. Refer to 86.15.19.
5. Remove door casing for access. Refer to 76.34.01.
6. Remove door primary water shedder. Refer to 76.58.07.
7. Position PVC secondary water shedder for access.
8. Remove door latch assembly. Refer to 86.65.16
9. Slacken and remove latch assembly cover securing screw.

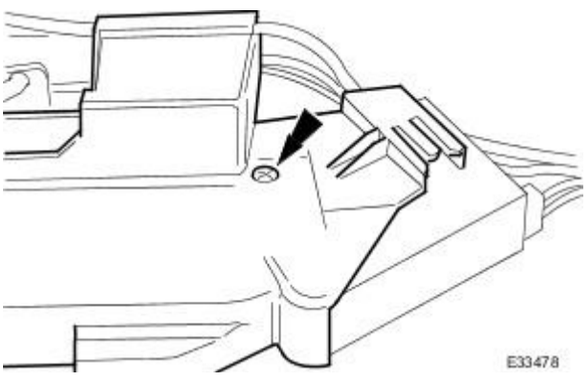

10. Release cover to latch inner locating boss and remove cover.

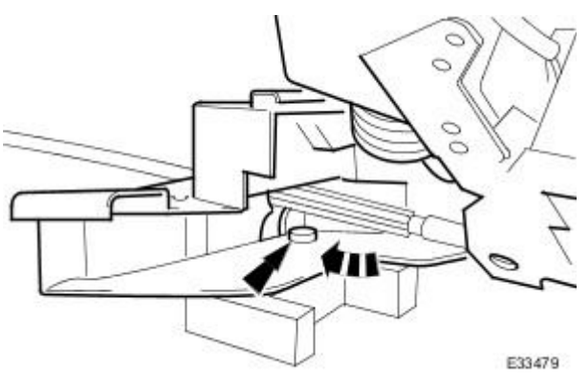

11. Release door ajar switch securing tangs and remove switch from latch assembly.

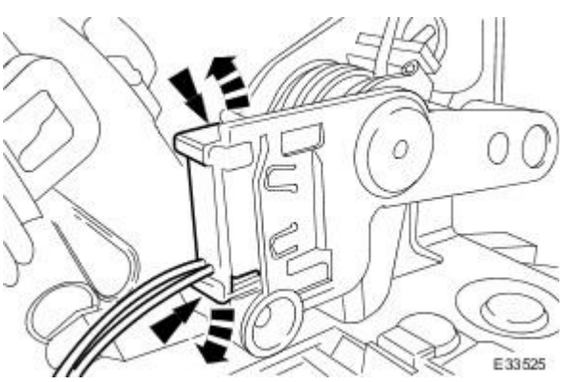

12. Remove and discard switch harness securing tape.
13. Remove harness multiplug pin protector and using special tool MS.1540, release switch terminal pins from multiplug.

Installation

1. Fit and fully seat terminal pins in harness multiplug and fit terminal pin protector.

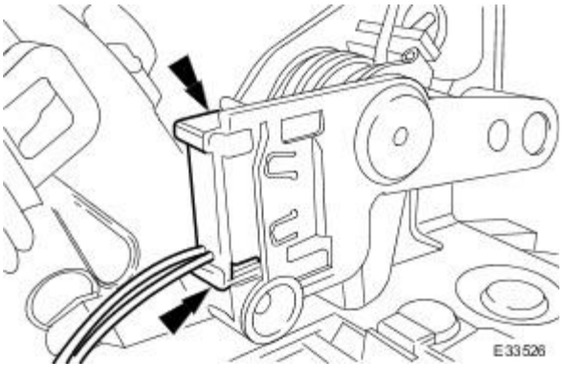

2. Fit door ajar switch to latch assembly, ensuring that both retaining tangs are fully seated.

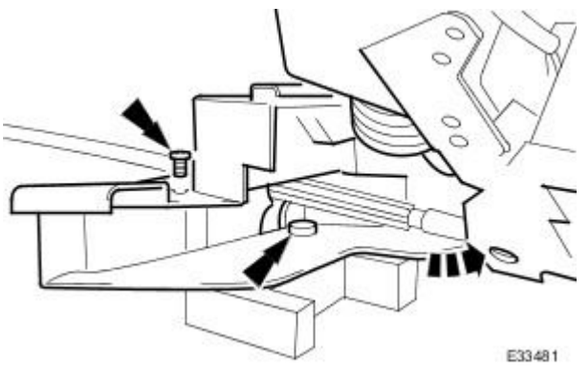

3. Secure switch harness with suitable tape.
4. Fit cover to latch assembly.
   - Position cover on latch assembly, ensuring that internal boss locates correctly in latch housing.
   - Fit and tighten cover securing screw.
5. Fit latch assembly to door. Refer to 86.65.16.
6. Reposition secondary water shedder in door.
7. Fit main water shedder to door. Refer to 76.58.07.
8. Fit door casing. Refer to 76.34.01.
9. Connect ground cable to battery terminal and fit battery cover. Refer to 86.15.15.

Handles, Locks, Latches and Entry Systems - Door Ajar Warning Indicator Switch

Removal and Installation

Removal

1. Turn ignition key to position II.
2. Motor door glass to fully raised position.
3. Turn ignition key to position O.
4. Remove battery cover and disconnect ground cable from battery terminal. Refer to 86.15.19.
5. Remove door casing for access. Refer to 76.34.01.
6. Remove door primary water shedder. Refer to 76.58.07.
7. Position PVC secondary water shedder for access.
8. Remove door latch assembly. Refer to 86.65.16
9. Slacken and remove latch assembly cover securing screw.

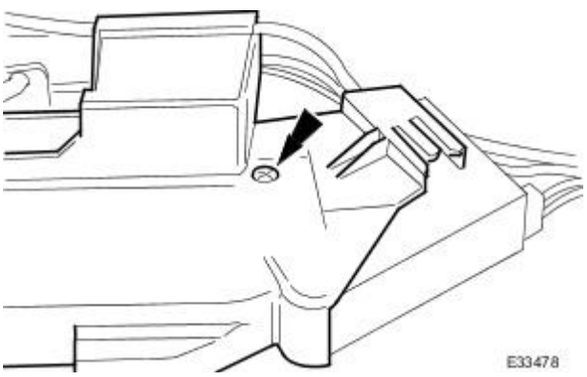

10. Release cover to latch inner locating boss and remove cover.

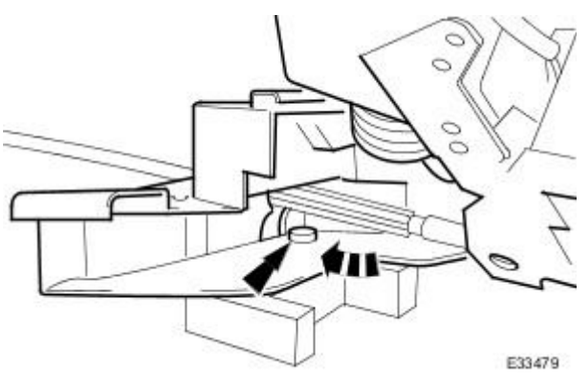

11. Release door lock/unlock switch securing tang, depress pip and remove switch from latch assembly.

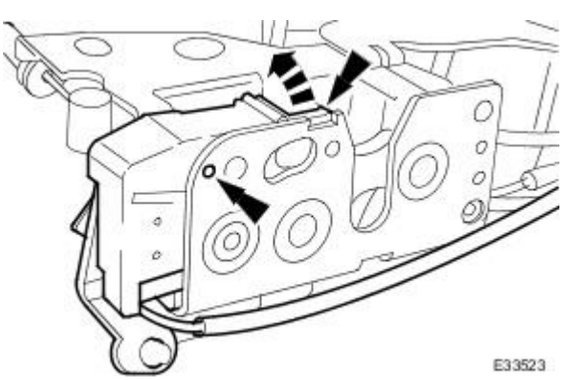

12. Remove and discard switch harness securing tape.
13. Remove harness multiplug pin protector and using special tool MS.1540, release switch terminal pins from multiplug.

Installation

1. Fit and fully seat terminal pins in harness multiplug and fit terminal pin protector.

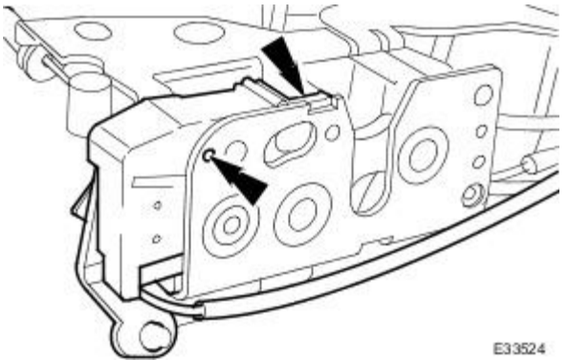

2. Fit door lock/unlock switch to latch assembly, ensuring that tang and pip are correctly located.

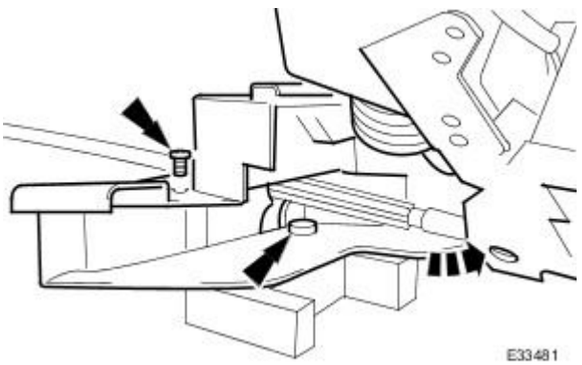

3. Secure switch harness with suitable tape.
4. Fit cover to latch assembly.
   - Position cover on latch assembly, ensuring that internal boss locates correctly in latch housing.
   - Fit and tighten cover securing screw.
5. Fit latch assembly to door. Refer to 86.65.16.
6. Reposition secondary water shedder in door.
7. Fit main water shedder to door. Refer to 76.58.07.
8. Fit door casing. Refer to 76.34.01.
9. Connect ground cable to battery terminal and fit battery cover. Refer to 86.15.15.

Handles, Locks, Latches and Entry Systems - Door Latch

Removal and Installation

Removal

1. Turn ignition key to position II.

2. Motor door glass to fully raised position.

3. Turn ignition key to position O.

4. WARNING: BEFORE COMMENCING WORK WITHIN A DOOR INTERIOR, THE GROUND CABLE MUST BE DISCONNECTED FROM THE BATTERY TERMINAL TO PREVENT INADVERTENT ACTIVATION OF THE GLOBAL GLASS CLOSING FEATURE.

Remove battery cover and disconnect ground cable from battery terminal. Refer to 86.15.19

5. Remove door escutcheon.

1. Holding door handle in the open position, remove the escutcheon screw cover.
2. Remove the escutcheon screw, remove escutcheon from door casing and return door handle to closed position.

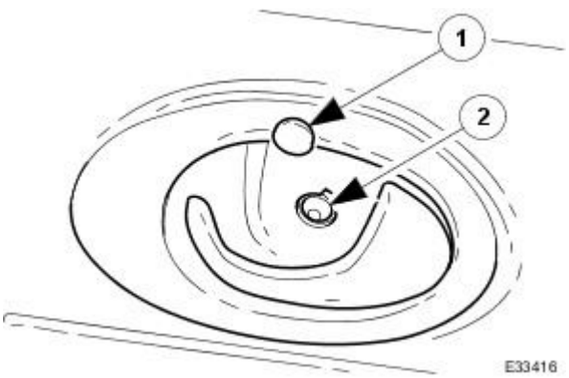

6. Remove trim mat from rear of door pocket and remove the screw.

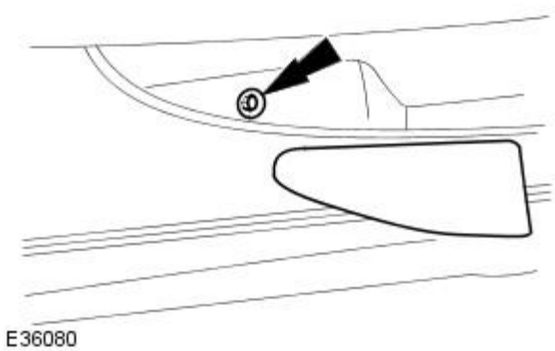

7. Position door switch pack for access.

1. Using a suitable plasrtic hook, release plastic stud and remove trim from front of door pocket.
2. Remove switch pack to door casing screw and position switch pack for access.

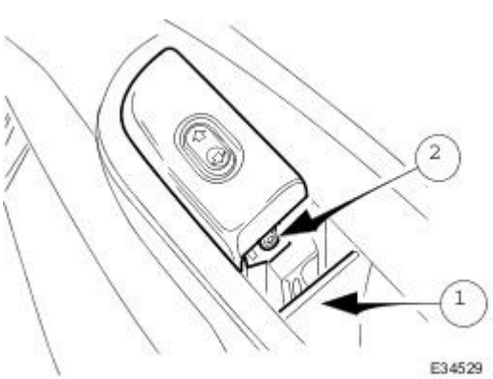

8. Remove casing to door bracket screw.

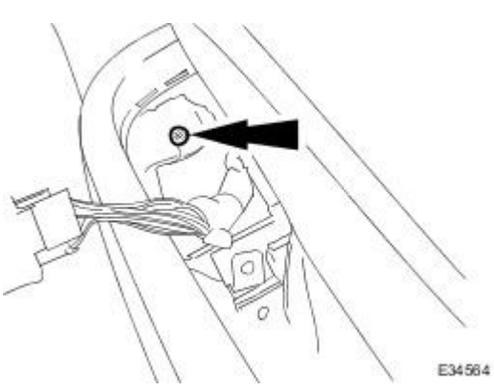

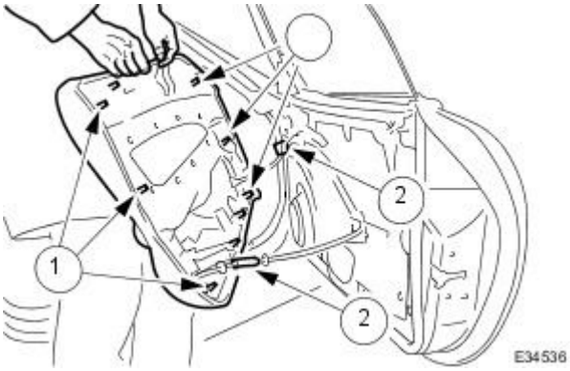

9. Remove door casing for access to multiplugs.

1. Release the eight casing to door studs.
2. Position the casing for access and disconnect the door switch pack and puddle lamp connectors.

10. Remove door casing from vehicle and detach switch pack.

11. Remove door water shedder. Refer to 76.58.07.

12. Remove the door glass rear runner lower screws.

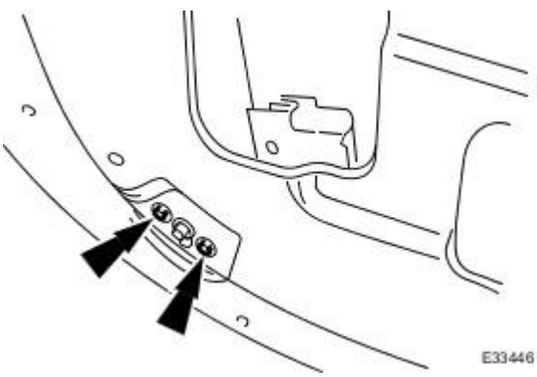

13. Reposition door glass rear runner.

- Mark the position of the glass rear runner upper screw.
- Remove the upper screw and move the runner away from the glass.

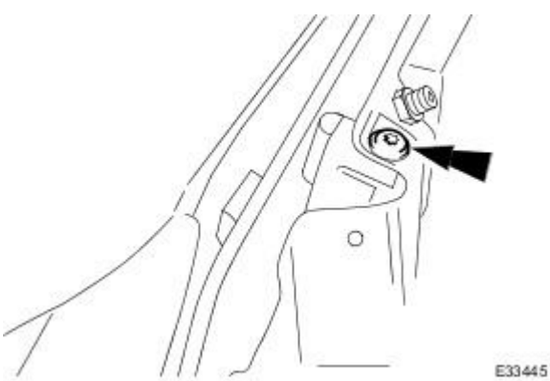

14. Where fitted, remove door lock security shield .

- Remove bolt securing lock barrel operating rod security shield.
- Release shield from spring clip at rear and remove shield from door.

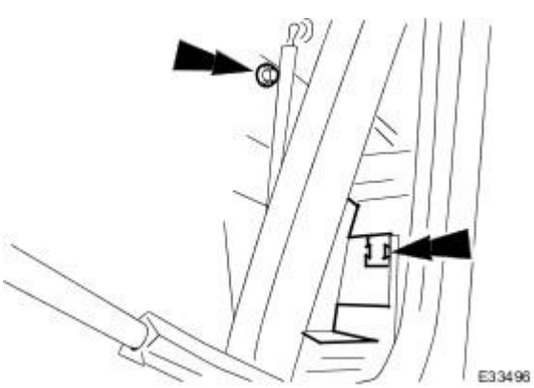

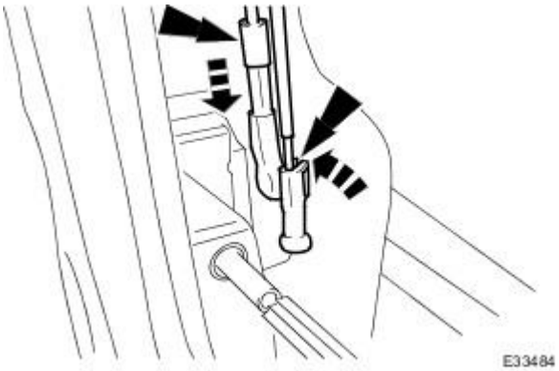

15. Disconnect door handle and lock barrel (driver door only) operating rods from lock links.

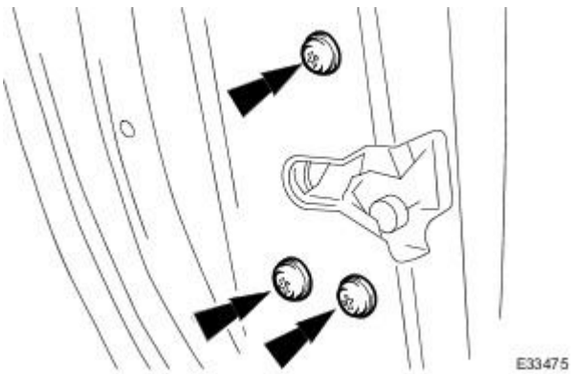

16. Remove the three screws and position lock/motor assembly for access.

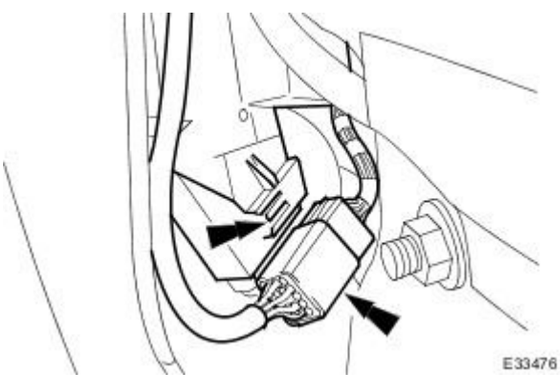

17. Remove lock motor harness connector from mounting bracket and disconnect connector.

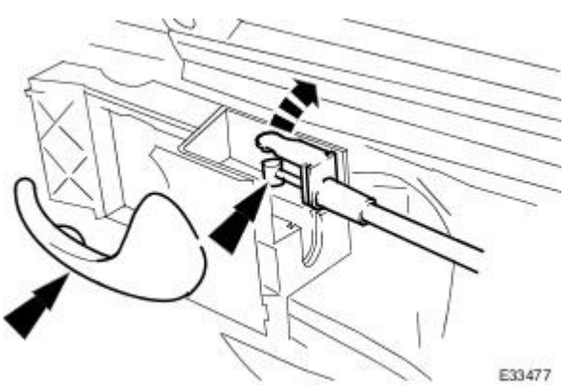

18. Release operating cable from door handle.

- Move inner door handle to the locked position.
- Remove cable outer from support bracket.
- Disconnect cable inner from door inner handle.

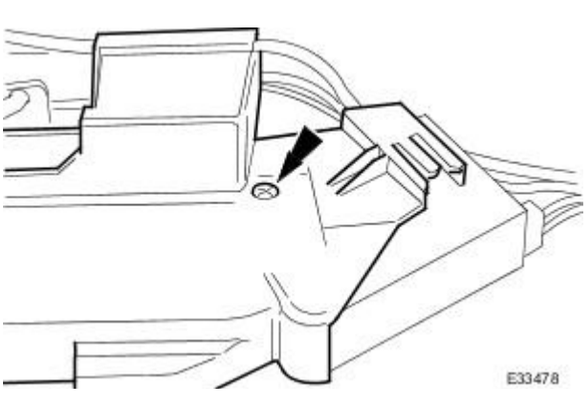

19. Remove lock/motor assembly from door.

20. Remove lock/motor assembly cover screw.

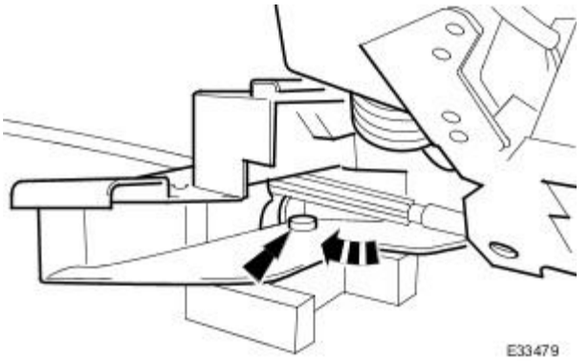

21. Releasing upper retaining boss, remove cover from lock/motor assembly.

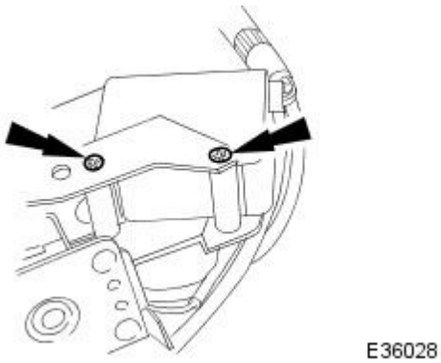

22. Remove motor to lock screws.

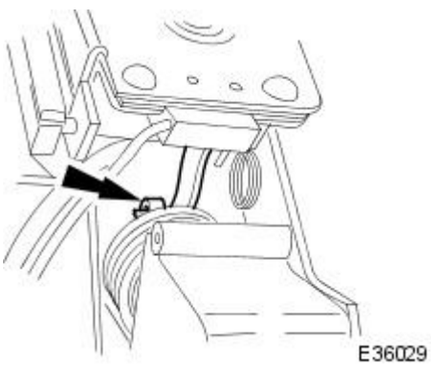

23. Release lock motor from lock operating arm.

24. Remove lock from door.

Installation

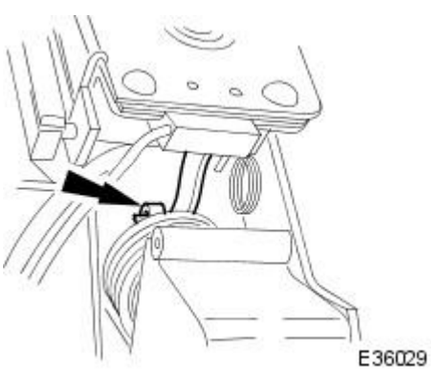

1. Connect lock motor to lock operating arm.

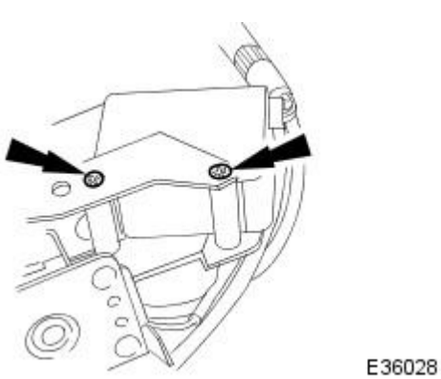

2. Install lock motor screws.

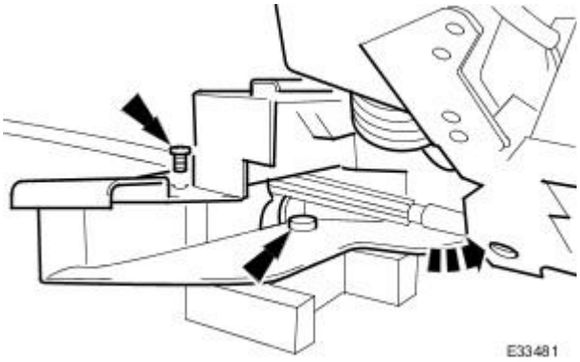

3. Install cover.

- Position cover on lock motor ensuring upper locating boss is correctly located.
- Install cover screw.

4. Position lock/motor assembly in door.

5. Move inner door handle outwards to the locked position.

6. Connect lock/motor assembly cable to door inner handle.

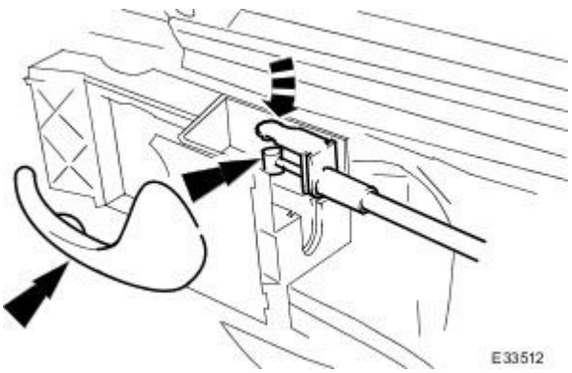

- Place lock assembly in door.
- Connect cable inner to door handle.
- Install cable outer on support bracket.

7. Connect harness to latch assembly.

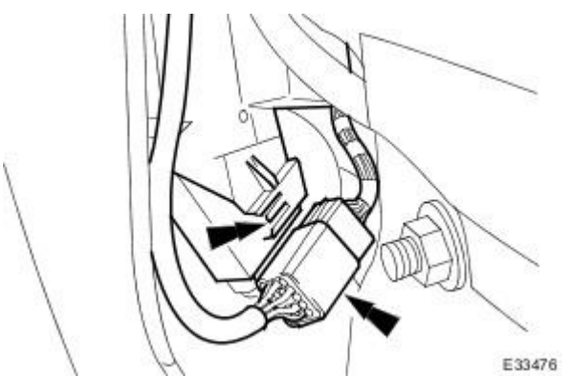

- Working through door aperture, position latch assembly for access.
- Connect harness connector.
- Install connector on mounting bracket.

8. Position latch assembly in door and and install screws.

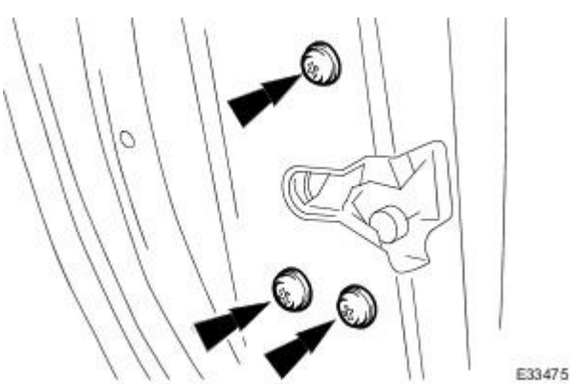

E34563

9. Connect door handle and lock barrel (driver door only) operating rods to latch assembly.

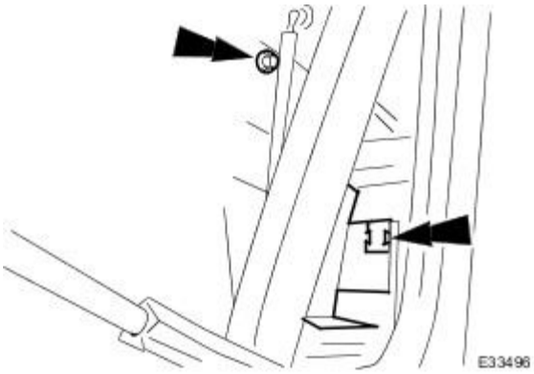

10. where fitted, install lock security shield.

- Install security shield over lock barrel operating rod and locate under spring clip at rear.
- Install securing bolt.

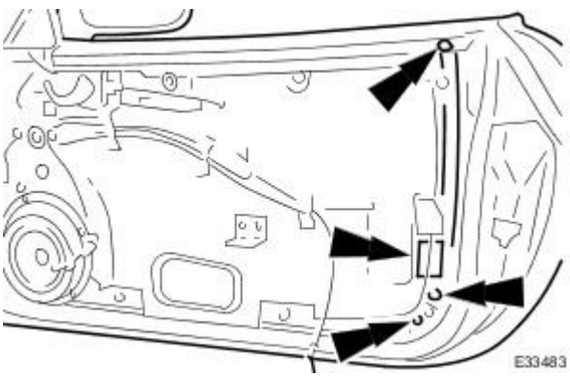

11. Install glass rear runner.

- Position rear runner on glass.
- Install but do not tighten lower screws.
- Install upper screw. ensure it is aligned with marker then fully tighten.
- Fully tighten lower screws.

12. Reposition PVC secondary water shedder.

13. Fit door main water shedder. Refer to 76.58.07.

14. Install new securing studs on casing.

15. Position but do not secure switch pack on casing.

16. Position casing at door and connect switch pack and puddle lamp connectors.

17. Align casing to door and press and fully seat securing studs into door locations.

18. Install casing securing screw at front of switch pack location.

19. Align switch pack to casing and install screw at rear.

20. Install trim to front of door pocket and fully seat plastic fastener.

21. Install casing screw at rear of door pocket.

22. Install trim mat at rear of door pocket.

23. Holding door handle in open position, install escutcheon on casing.

24. Install escutcheon screw and fit screw cover.

25. Return door handle to closed position.

26. Connect ground cable to battery terminal and install battery cover. Refer to 86.15.15.

Handles, Locks, Latches and Entry Systems - Door Latch Cable

Removal and Installation

Removal

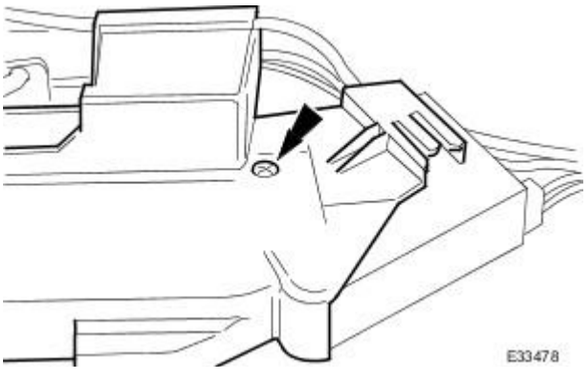

1. Remove door latch assembly. Refer to 86.65.16.
2. Slacken and remove latch assembly cover securing screw.

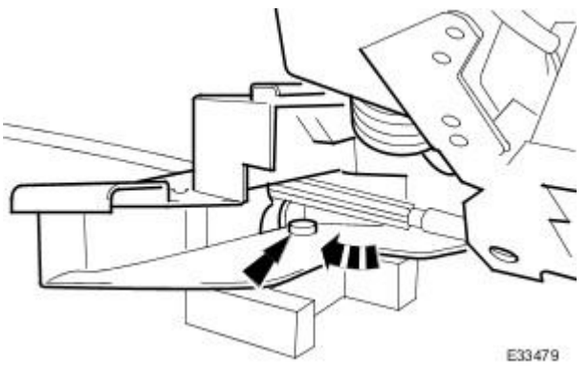

3. Release cover to latch inner locating boss and remove cover.

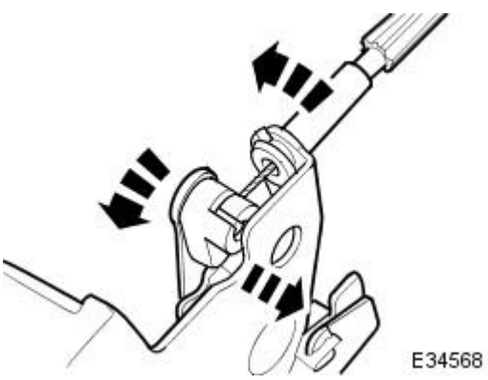

4. Release control cable from bracket, rotate 90 degrees to align with slot in bush and withdraw cable nipple from latch assembly.

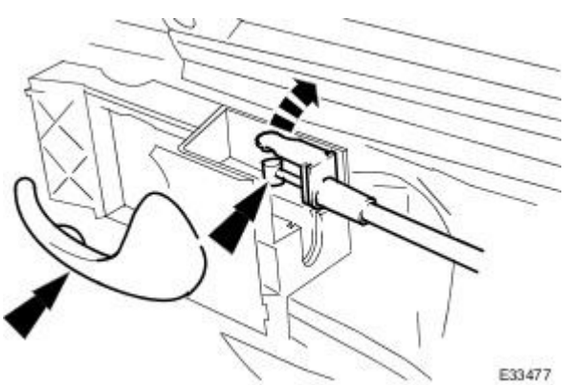

5. Release operating cable from door handle.
   - Move inner door handle to the locked position.
   - Remove operating cable outer abutment from support bracket.
   - Disconnect cable inner from door inner handle and remove cable from door..

Installation

1. Fit control cable nipple to latch assembly bush, rotate 90 degrees to captive position and locate outer cable on bracket.

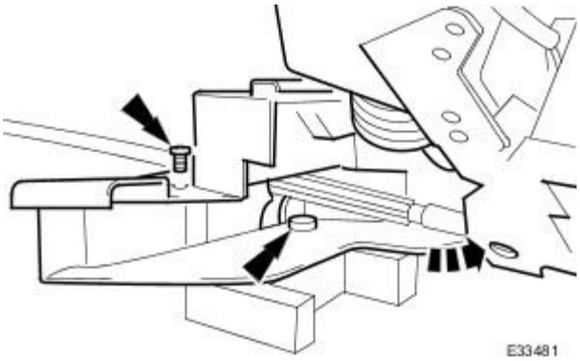

2. Fit cover to latch assembly.

- Position cover on latch assembly, ensuring that internal boss locates correctly in latch housing.
- Fit and tighten cover securing screw.

3. Fit latch assembly and cable to door. Refer to 86.65.16.

4. Reposition secondary water shedder in door.

5. Fit main water shedder to door. Refer to 76.58.07.

6. Fit door casing. Refer to 76.34.01.

7. Connect ground cable to battery terminal and fit battery cover. Refer to 86.15.15.

Handles, Locks, Latches and Entry Systems - Door Lock Actuator

Removal and Installation

Removal

1. Turn ignition key to position II.
2. Motor door glass to fully raised position.
3. Turn ignition key to position O.
4. Remove battery cover and disconnect ground cable from battery terminal. Refer to 86.15.19
5. Remove door casing for access. Refer to 76.34.01.
6. Remove door water shedder. Refer to 76.58.07.
7. Position PVC secondary water shedder for access.
8. Slacken and remove the door glass rear runner lower securing screws.

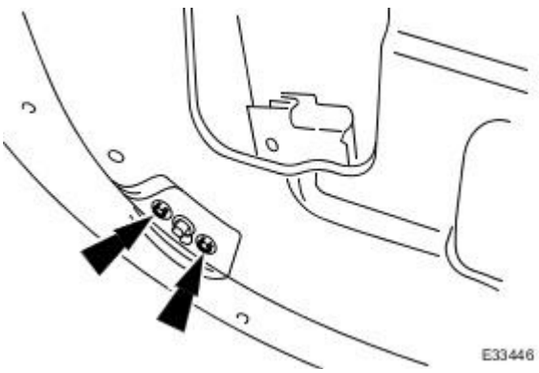

9. Reposition door glass rear runner.
   - Mark the position of the glass rear runner upper securing screw.
   - Slacken and remove the upper securing screw and move the runner away from the glass.

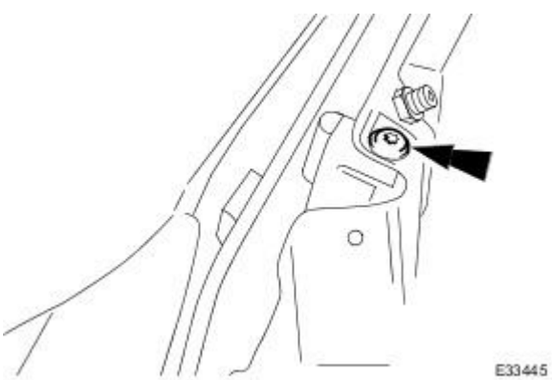

10. UK specification driver door only.
    - Remove bolt securing lock barrel operating rod security shield.
    - Release shield from spring clip at rear and remove shield from door.

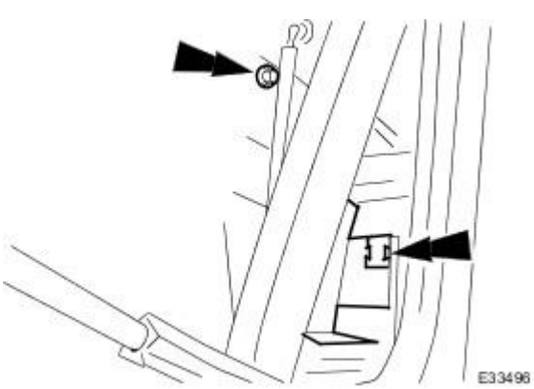

11. Disconnect door handle and lock barrel (driver door only) operating rods from latch links.

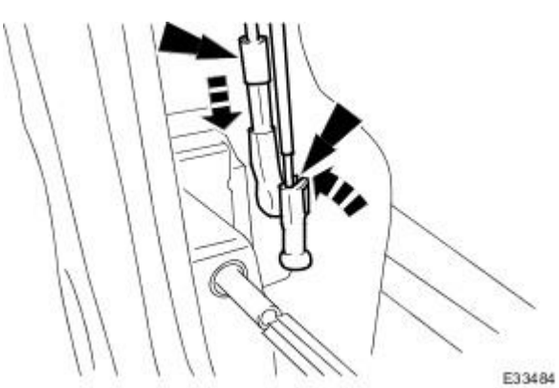

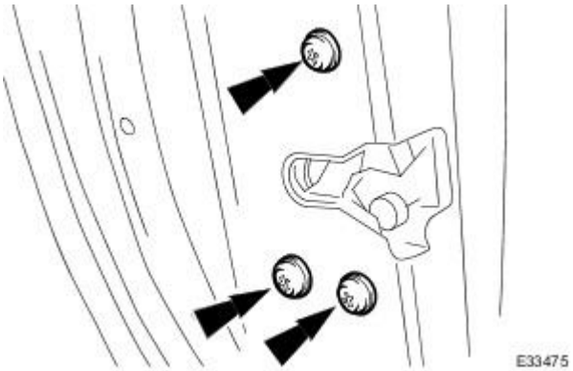

12. Slacken and remove the three latch assembly securing screws and position latch for access.

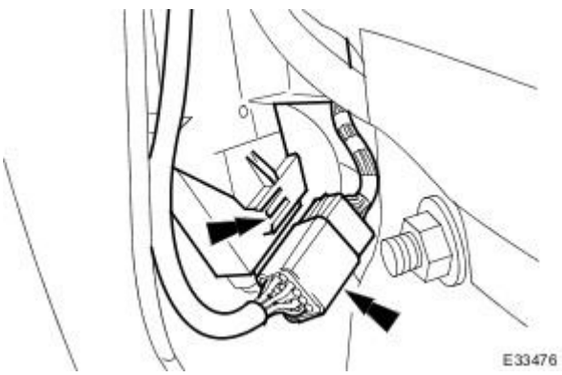

13. Remove latch motor harness multiplug from mounting bracket and disconnect multiplug.

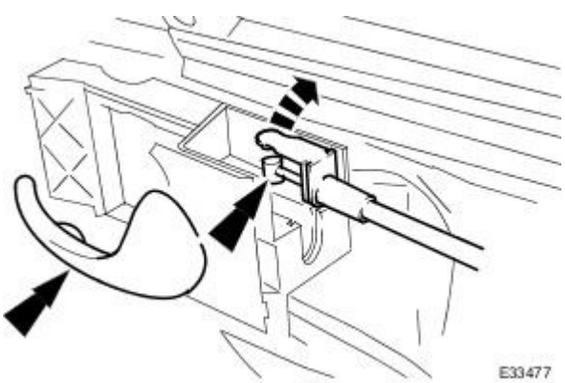

14. Release operating cable from door handle.

- Move inner door handle to the locked position.
- Remove operating csble outer abutment from support bracket.
- Disconnect cable inner from door inner handle.

15. Remove lock motor assembly from door.

Installation

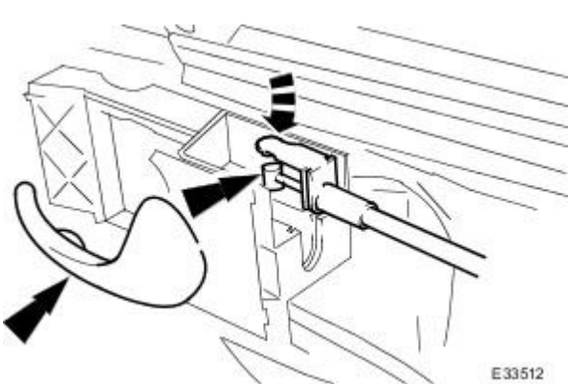

1. Move door handle to the locked position.

2. Connect latch assembly cable to door inner handle.

- Place latch assembly in door.
- Connect cable inner to door handle.
- Fit and fully seat cable outer abutment on support bracket.

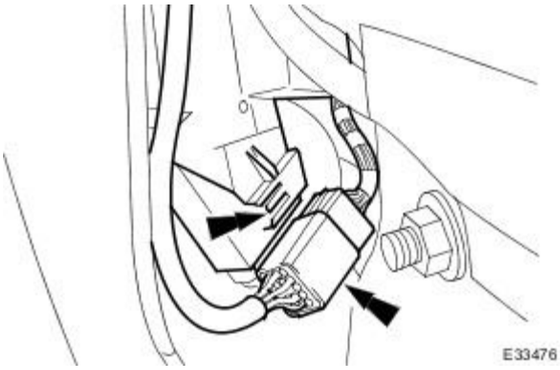

3. Connect harness to latch assembly.

- Working through door aperture, position latch assembly for access.
- Connect harness multiplug.
- Fit multiplug onto mounting bracket.

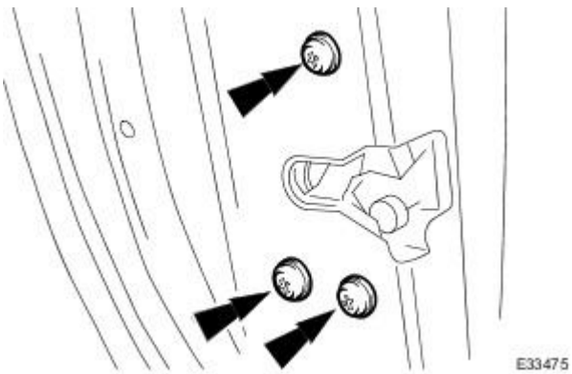

4. Position latch assembly in door and fit and tighten securing screws.

E34563

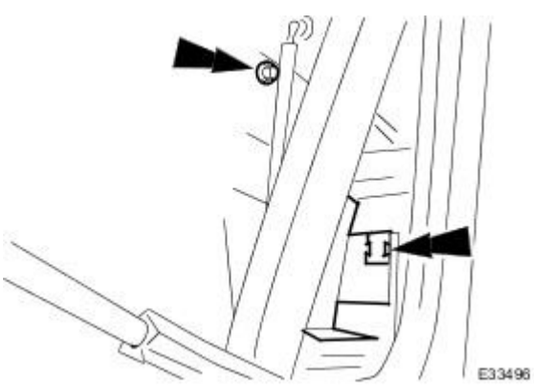

5. Connect door handle and lock barrel (driver door only) operating rods to latch assembly.

6. UK specification driver door only.

- Fit security shield over lock barrel operating rod and locate under spring clip at rear.
- Fit and tighten securing bolt.

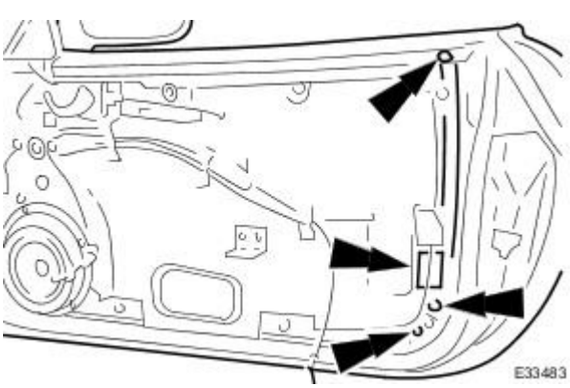

7. Fit glass rear runner.

- Position rear runner on glass.
- Fit but do not tighten lower securing screws.
- Fit upper securing screw. ensure it is aligned with marker then fully tighten.
- Fully tighten lower securing screws.

8. Reposition PVC secondary water shedder.

9. Fit door main water shedder. Refer to 76.58.07.

10. Fit door casing. Refer to 76.34.01.

11. Connect ground cable to battery terminal and fit battery cover. Refer to 86.15.15.

Handles, Locks, Latches and Entry Systems - Door Lock Control Switch

Removal and Installation

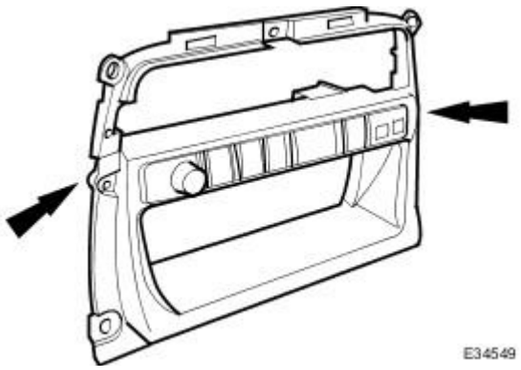

1. Remove battery cover and disconnect ground cable from battery terminal. Refer to 86.15.15.
2. Remove 'J' gate surround. Refer to 76.25.24.
3. Remove centre console for access. Refer to 76.25.01.
4. Remove radio console for access. Refer to 76.25.15.
5. Disconnect switch module harness multiplug, release module end locaters and lightly press module out of console.

Installation

1. Fit switch module to console ensuring that end locaters are fully seated.
2. Connect switch module harness multiplug.
3. Fit radio console. Refer to 76.25.15.
4. Fit centre console. Refer to 76.25.01.
5. Fit 'J' gate surround. Refer to 76.25.24.
6. Connect ground cable to battery terminal and fit battery cover. Refer to 86.15.15.

Handles, Locks, Latches and Entry Systems - Door Lock Cylinder

Removal and Installation

Removal

1. WARNING: BEFORE COMMENCING WORK WITHIN A DOOR INTERIOR, THE EARTH CABLE MUST BE DISCONNECTED FROM THE BATTERY TERMINAL TO PREVENT INADVERTENT ACTIVATION OF THE GLOBAL GLASS CLOSING FEATURE.

Remove driver's door casing. Refer to 76.34.01.

2. Remove driver's door handle. Refer to 76.58.07.

3. Remove operating arm and bias spring.

1. Remove 'C' clip securing plastic operating arm to barrel.
2. Remove operating arm and bias spring from barrel.

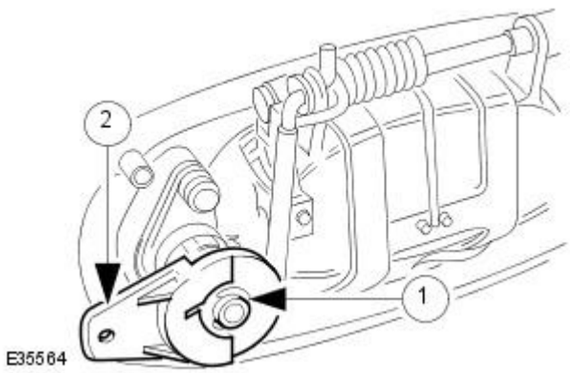

4. Slacken and remove screw securing barrel to housing and withdraw barrel.

Installation

1. NOTE: For re-fitting of original lock barrel, refer to operations 4 to 9.

Identify key cut code.

1. Hold key so that cut outs can be identified and commencing at key grip, note and record cut out sequence.

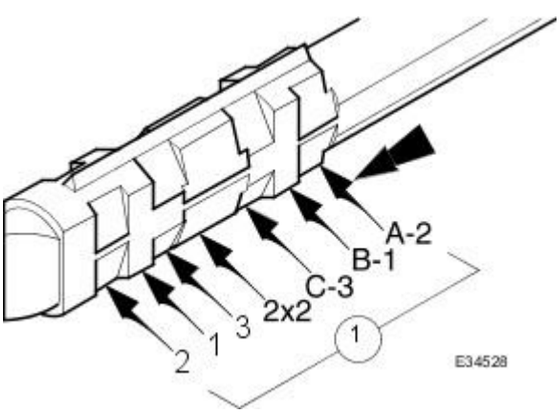

2. Fit lock discs to barrel.

1. Grease bore of lock barrel.
2. Ensure lock discs match recorded key code.
3. Grease the first seven discs and install them in the barrel in sequence with embossed spacers in between and orientated to align roller locations.
4. Fit wavy spring spacer.
5. Grease and fit final disc.

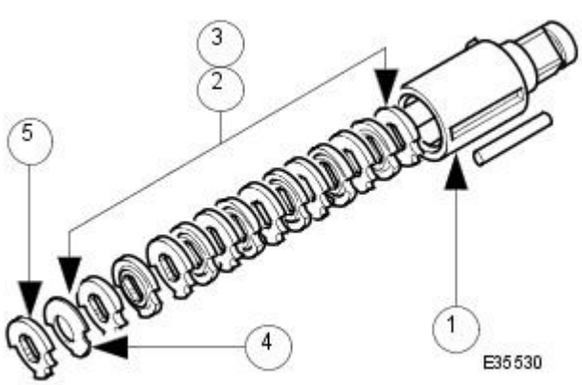

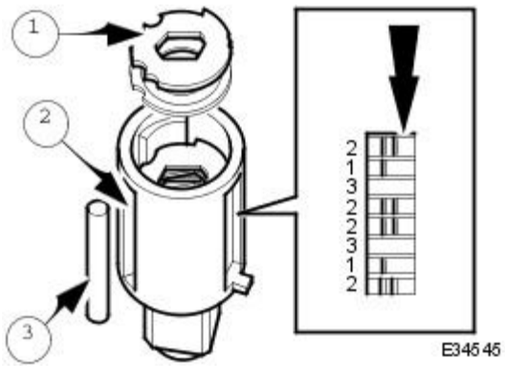

3. Fit shutter assembly and roller to barrel.

1. Grease shutter assembly and fit to barrel.
2. Align recesses in discs and spacers to accept the steel roller.
3. Grease steel roller and fit into recesses via barrel slot.

- Via adjacent barrel slot, check discs for correct sequence and orientation.

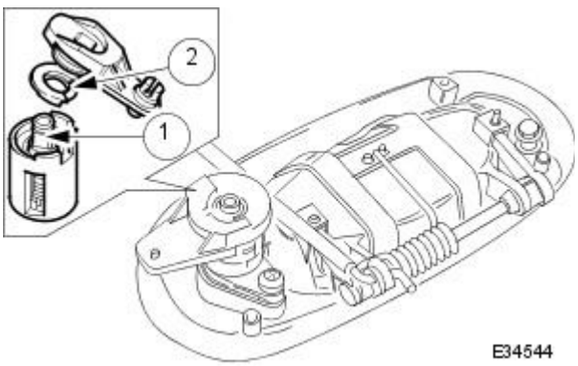

4. Fit lock barrel and shutter assembly to housing.

1. Align and fit barrel into lock housing.
2. Fit plastic securing ring to barrel and rotate to engage locking tangs.

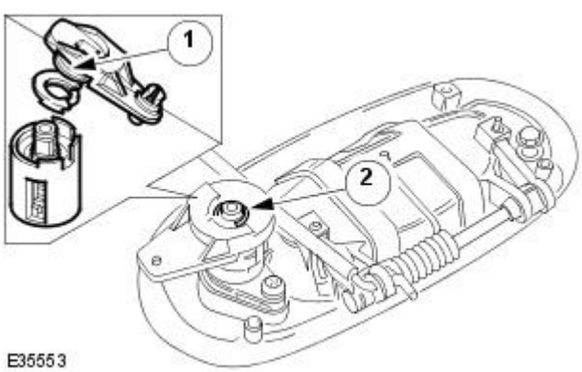

5. Fit operating arm to barrel.

1. Fit bias spring to operating arm ensuring it is fully seated and tensioned, with ends positioned each side of pillar.
2. Fit operating arm and bias spring assembly to barrel and secure with 'C' clip.

6. Position lock assembly in door handle and fit and tighten securing screw.

7. Fit key and check lock function.

8. Fit driver's door handle. Refer to operations in this section.

9. Fit driver's door casing. Refer to 76.34.01.

Handles, Locks, Latches and Entry Systems - Exterior Driver Door Handle

Removal and Installation

Removal

1. WARNING: BEFORE COMMENCING WORK WITHIN A DOOR INTERIOR, THE EARTH CABLE MUST BE DISCONNECTED FROM THE BATTERY TERMINAL TO PREVENT INADVERTENT ACTIVATION OF THE GLOBAL GLASS OPEN/CLOSE FEATURE.

Ensure that door glass is fully up.

2. Remove battery cover and disconnect earth lead from terminal. Refer to 86.15.19.

3. Remove door casing. Refer to 76.34.01.

4. Remove door casing center support bracket.

1. Slacken and remove the two casing support bracket securing bolts and remove bracket from door.

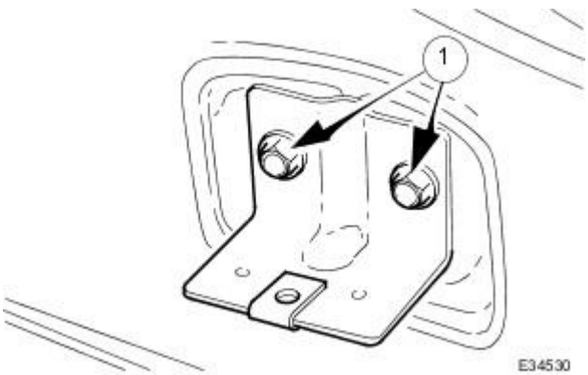

5. Remove tape securing puddle lamp harness to water shedder and reposition harness for access.

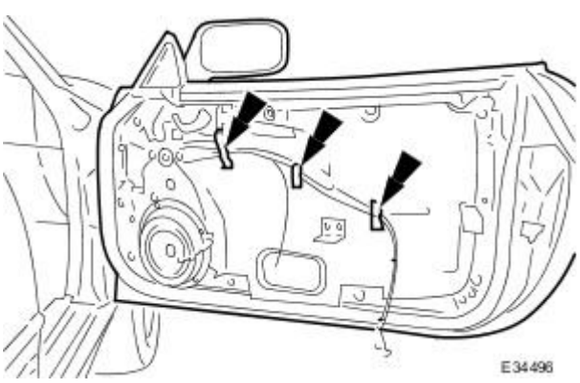

6. Carefully peel back main water shedder remove from door and place adhesive face downwards on clean dry plastic sheet.

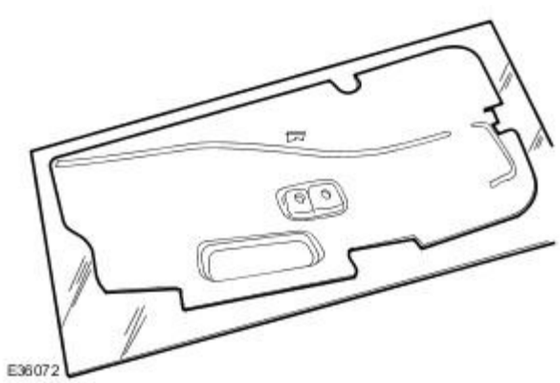

7. Position PVC secondary water shedder for access.

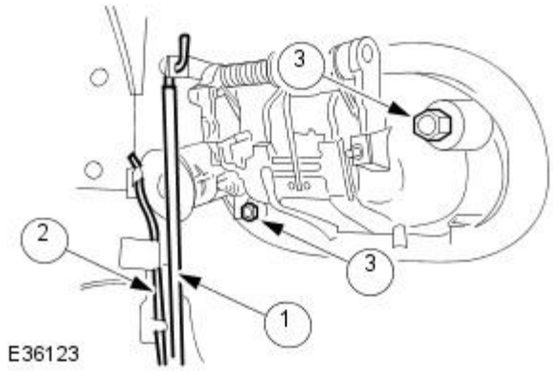

8. Disconnect and remove door handle.

1. Disconnect link rod from door handle.
2. Disconnect lock barrel operating arm link rod from motor.
3. Slacken and remove the two door handle securing screws and remove door handle from vehicle.

9. Remove lock assembly from door handle. Refer to 76.37.71.

Installation

1. Fit lock assembly to door handle. Refer to 76.37.71.

2. Connect lock barrel link rod to operating arm.

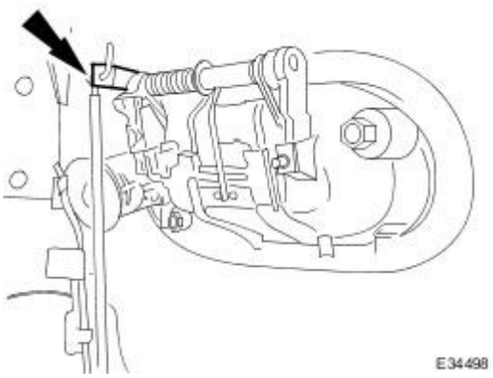

3. Fit door handle to door.

- Position and fully seat door handle.
- Fit and tighten the two door handle securing screws.
- Connect lock barrel operating arm link rod to motor.
- Connect door handle to lock operating link rod.

4. Reposition PVC secondary water shedder.

5. Fit main water shedder to door.

- Ensure that adhesive face of water shedder and all door contact surfaces are clean, free of grease and oil, and absolutely dry.
- Commencing at the top, align and fit water shedder to door.
- Reposition puddle lamp harness and secure to water shedder using suitable tape.
- Position door casing center support bracket. and fit and tighten securing bolts.

6. Fit door casing. Refer to 76.34.01.

7. Connect earth cable to battery terminal and fit battery cover. Refer to 86.15.15.

Handles, Locks, Latches and Entry Systems - Exterior Passenger Door Handle

Removal and Installation

Removal

1. WARNING: BEFORE COMMENCING WORK WITHIN A DOOR INTERIOR, THE EARTH CABLE MUST BE DISCONNECTED FROM THE BATTERY TERMINAL TO PREVENT INADVERTENT ACTIVATION OF THE GLOBAL GLASS CLOSING FEATURE.

Ensure that door glass is fully up.

2. Remove battery cover and disconnect earth lead from terminal. Refer to 86.15.19.

3. Remove door casing. Refer to 76.34.01.

4. Remove door casing center support bracket.

1. Slacken and remove the two casing support bracket securing screws and remove bracket from door.

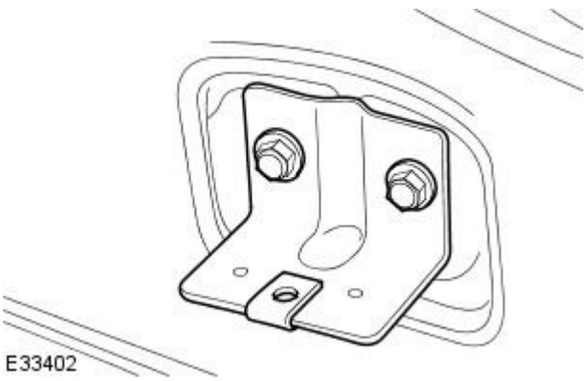

5. Remove tape securing puddle lamp harness to water shedder and reposition harness for access.

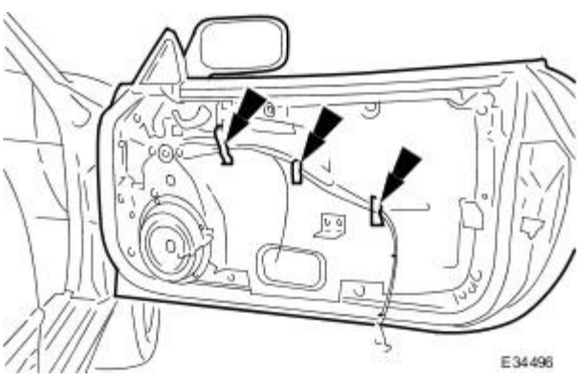

6. Carefully peel back water shedder, remove from door and place adhesive face downwards on clean dry plastic sheet.

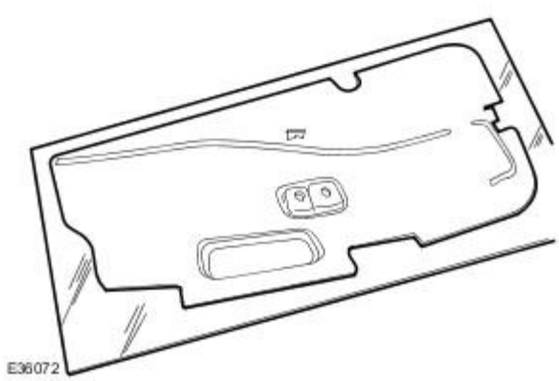

7. Disconnect and remove door handle.

1. Disconnect link rod from door handle.
2. Slacken and remove the two door handle securing screws and remove door handle from vehicle.

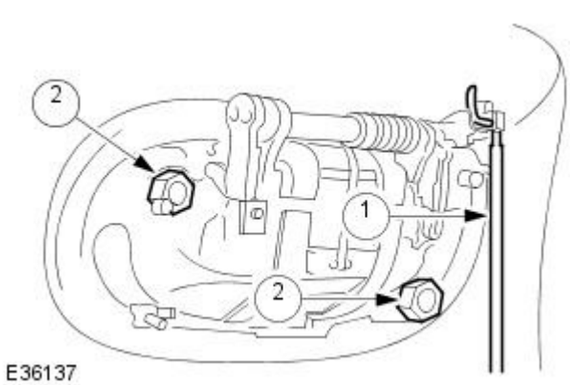

Installation

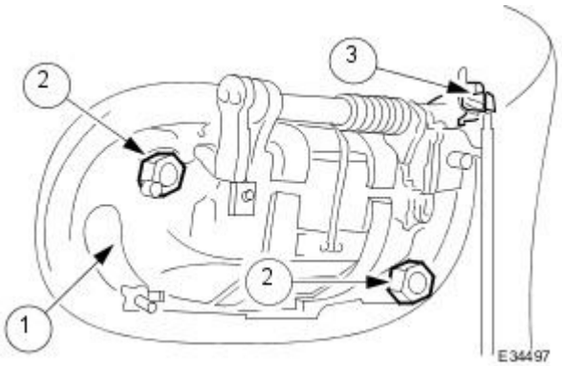

1. Fit door handle to door.

1. Position and fully seat door handle.
2. Fit and tighten the two door handle securing screws.
3. Connect door handle to link rod.

2. Fit water shedder to door.

- Ensure that adhesive face of water shedder and all door contact surfaces are clean, free of grease and oil, and absolutely dry.
- Commencing at the top, align and fit water shedder to door.
- Reposition puddle lamp harness and secure to water shedder using suitable tape.
- Position door casing center support bracket. and fit and tighten securing bolts.

3. Fit door casing. Refer to 76.34.01.

4. Connect earth cable to battery terminal and fit battery cover. Refer to 86.15.15.

Handles, Locks, Latches and Entry Systems - Glove Compartment Lid Lock Cylinder

Removal and Installation

Removal

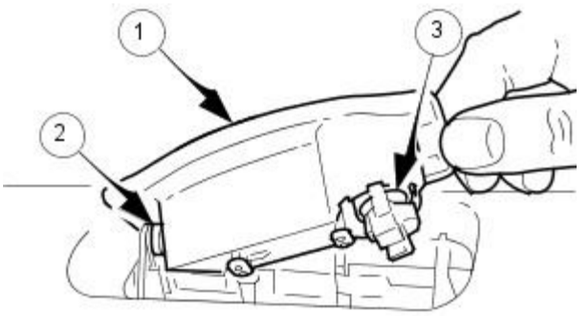

E33429

1. Remove glovebox lid. Refer to 76.52.02.

2. Remove the glove box handle and lock barrel.

1. Holding the handle in the open position, remove it from the mounting bracket by carefully prising the RH support outwards.
2. Remove the handle return spring.
3. Releasing the retaining tangs, remove the lock barrel.

Installation

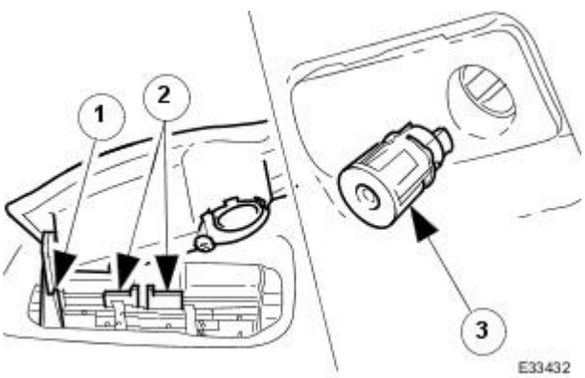

E33432

1. Fit glove box handle and lock barrel to lid.

1. Fit handle return spring ensuring that it engages in the lid mounting slot.
2. Position lock rods inwards and fit and fully seat handle in right-hand mounting bracket.
3. Fit lock barrel to lid.

2. Fit glovebox lid. Refer to 76.52.02.

Handles, Locks, Latches and Entry Systems - Hood Ajar Switch

Removal and Installation

Removal

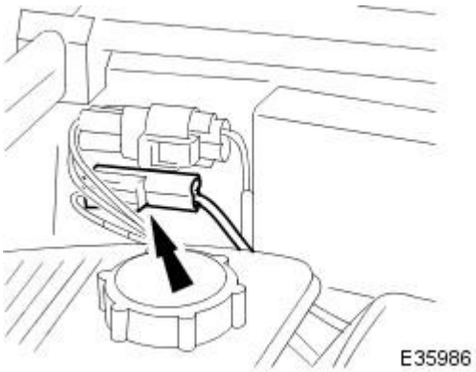

1. Open hood and fit cover to RH side fender.
2. Release hood open microswitch harness multiplug from body tang and disconnect multiplug.

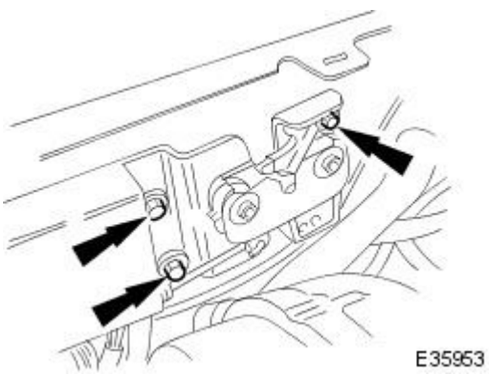

3. Remove three bolts securing RH bonnet latch/microswitch assembly to body.

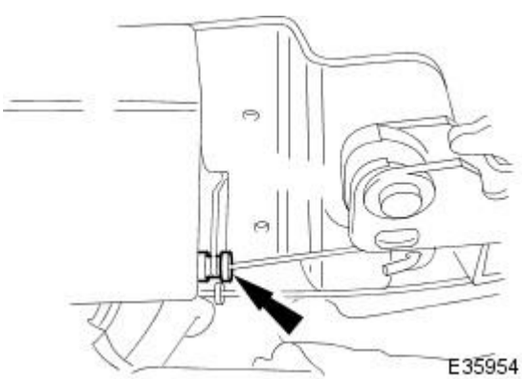

4. Withdraw hood release outer cable from latch mounting bracket.

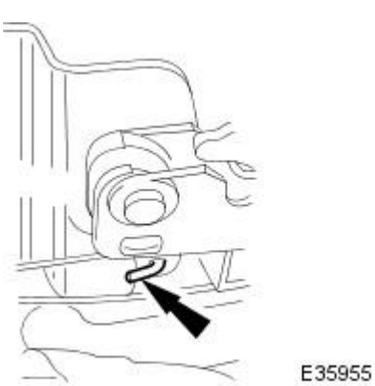

5. Disconnect hood release cable hook from latch lever.
6. Remove latch/microswitch assembly from vehicle.

Installation

1. Position latch/microswitch assembly at body.
2. Connect release cable hook to latch lever.
3. Locate and fully seat release outer cable in latch mounting bracket.
4. Position latch/microswitch assembly on body apertures and install securing bolts.
5. Connect hood open microswitch harness multiplug and fit and fully seat multiplug on body tang.
6. Remove fender cover, shut hood and check that latch and microswitch function correctly.

Handles, Locks, Latches and Entry Systems - Ignition Lock Cylinder

Removal and Installation

Removal

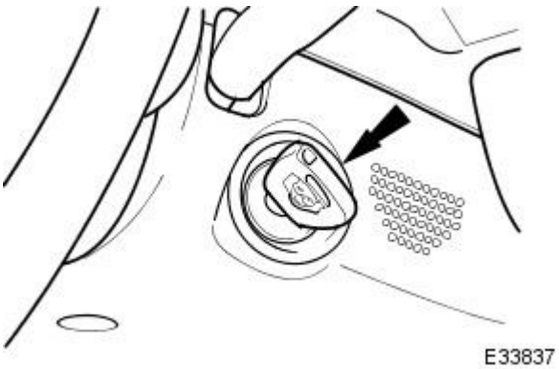

1. Remove the ignition key from the steering column lock.

2. Remove the steering column lower cowl; refer to Section 501-05.

3. Insert the ignition key into the steering column lock.

1. Turn the key to the AUXILIARY position.

E33539

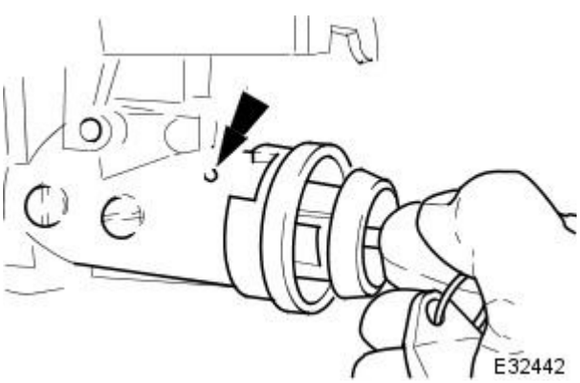

4. Remove the lock barrel from the steering column lock.

1. Press the lock barrel retaining peg to release the barrel.
2. Withdraw the lock barrel from the steering lock.

5. Remove the ignition key.

Installation

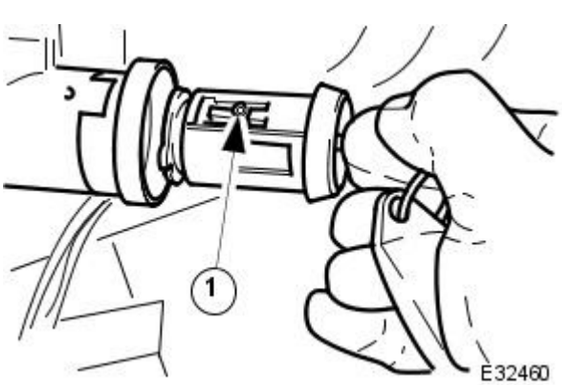

1. Insert the ignition key into the lock barrel.

2. Align the lock barrel to the steering column lock.

1. Rotate the ignition key until alignment of the lock barrel is attained.

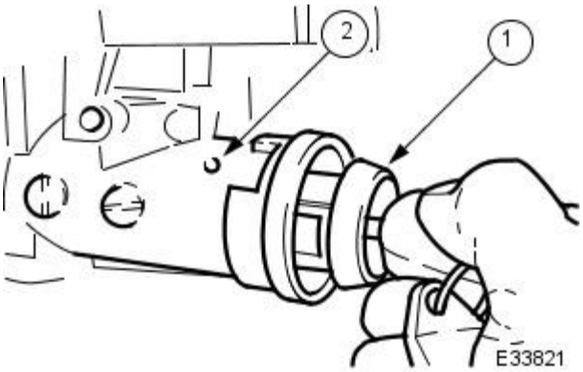

3. Install the lock barrel to the steering column lock.

1. Fully seat the lock barrel to the steering column lock.
2. Ensure that the retaining peg has engaged.

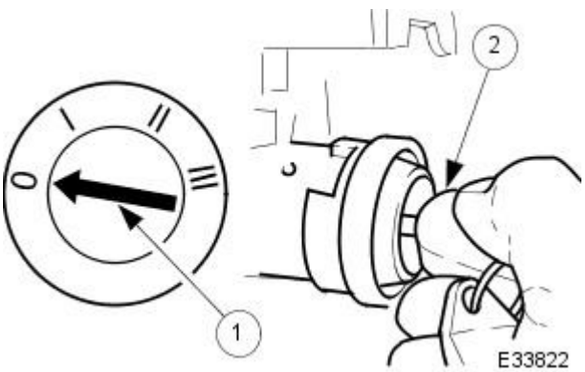

4. Turn the ignition key to the OFF position.

1. Withdraw the ignition key from the lock.

5. Install the steering column lower cowl; refer to Section 501-05.

6. Insert the ignition key into the steering lock.

Published: 11-May-2011

Handles, Locks, Latches and Entry Systems - Luggage Compartment Lid and Fuel Filler Door Release Switch

Removal and Installation

Removal

1. Remove battery cover and disconnect ground cable from battery terminal. Refer to 86.15.19.
2. Remove driver side underscuttle for access to lower fascia. Refer to 76.46.11.
3. Release retaining tangs and withdraw switch assembly from driver side lower fascia.

E35956

4. Disconnect harness multiplug from fuel filler flap/trunk lid release switch assembly.

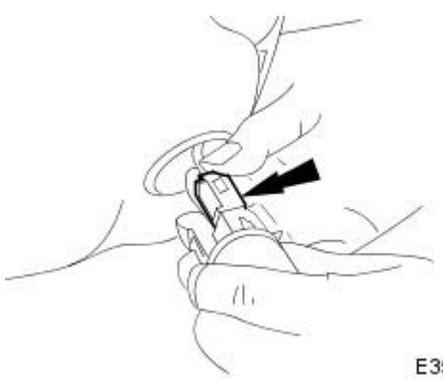

E35957

Installation

1. Install fuel filler flap/trunk lid release switch assembly to driver side lower fascia, ensuring that retaining tangs are fully seated.
2. Connect harness multiplug to switch assembly.
3. Install driver side underscuttle. Refer to 76.46.11
4. Connect ground cable to battery terminal and install battery cover. Refer to 86.15.15.

Handles, Locks, Latches and Entry Systems - Luggage Compartment Lid Latch

Removal and Installation

Removal

1. Remove trunk floor carpet.
2. Remove trunk rear finisher. Refer to 76.19.44.
3. Remove tape securing lock mechanism harness and disconnect harness multiplug.

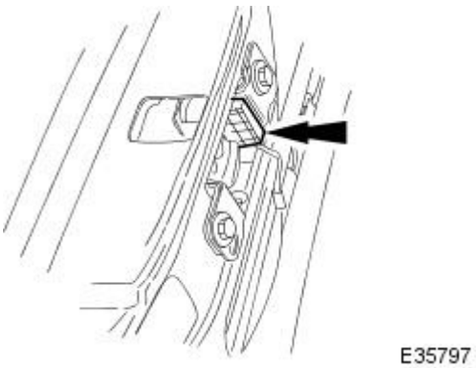

4. Slacken and remove lock mechanism securing bolts.

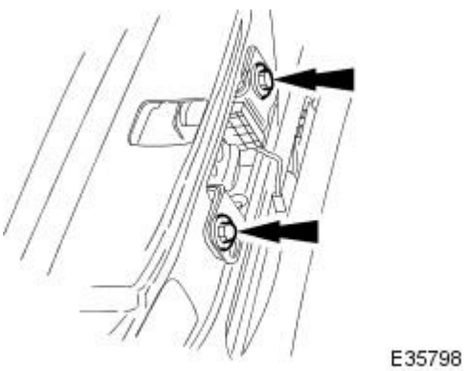

5. Position lock mechanism for access and disconnect lock barrel operating cable.

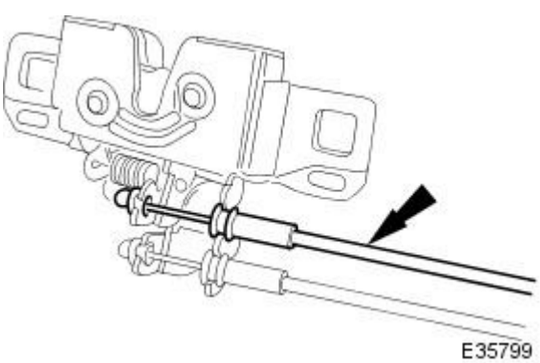

6. Disconnect trunk lock actuator operating cable

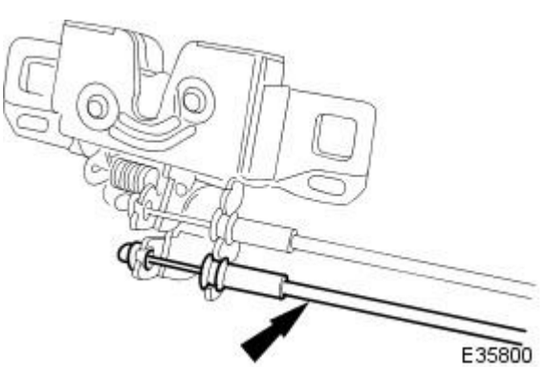

7. Remove lock mechanism from trunk lid.

Installation

1. Position lock mechanism in trunk lid.

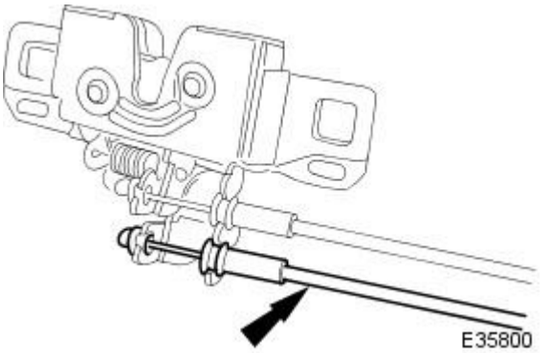

2. Connect trunk lock actuator operating cable.

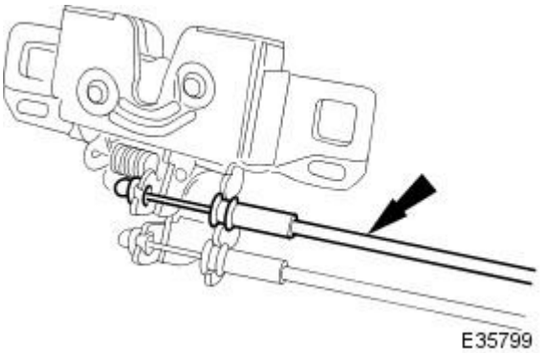

3. Connect trunk lock barrel operating cable.

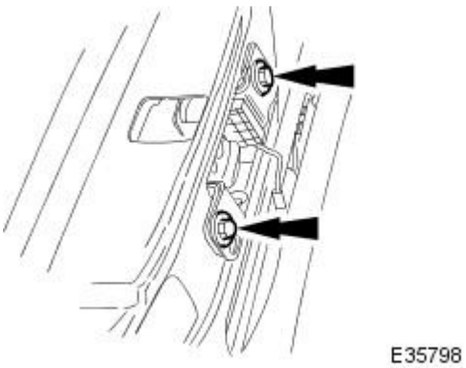

4. Position and fully seat lock mechanism and fit but do not tighten securing bolts.

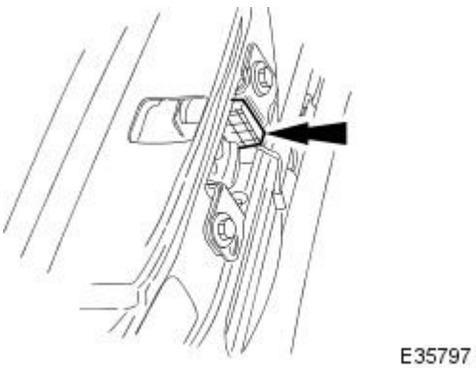

5. Connect trunk lock harness multiplug.

6. Close trunk lid, and check lock for satisfactory operation.

7. Open trunk lid adjust lock position as necessary and fully tighten securing bolts.

8. Secure harness to trunk lid with linen adhesive tape.

9. Fit trunk rear finisher. Refer to 76.19.44.

10. Fit trunk floor carpet.

Handles, Locks, Latches and Entry Systems - Luggage Compartment Lid Latch Actuator

Removal and Installation

Removal

1. Remove battery cover and disconnect ground cable from battery terminal. Refer to 86.15.19.
2. Remove trunk floor carpet.
3. Remove trunk rear finisher. Refer to 76.19.44.
4. Remove the two trunk lid lock motor mounting bracket securing screws and position bracket/motor assembly for access.

5. Free motor release cable outer from bracket abutment.

6. Disconnect release cable hook from motor rod and withdraw motor/bracket assembly from trunk.

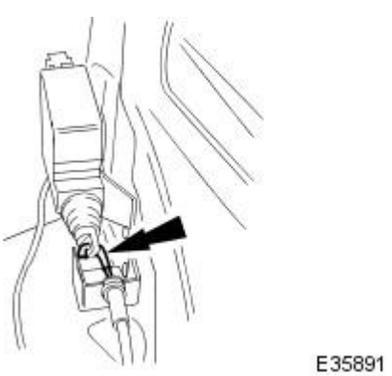

7. Remove two screws securing motor to mounting bracket and remove motor from bracket.

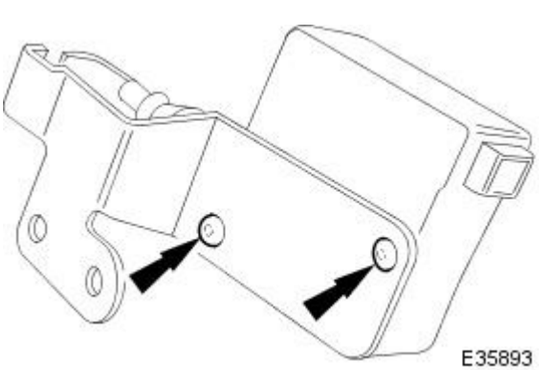

Installation

1. Position trunk lid lock motor on mounting bracket.
2. Install motor to mounting bracket securing screws.
3. Fit release cable hook onto motor rod.
4. Position motor release cable outer on bracket abutment.

5. Position and fully seat lock motor/ mounting bracket assembly.
6. Install bracket securing screws.
7. Install trunk rear finisher. Refer to 76.19.44.
8. Install trunk floor carpet.
9. Connect ground cable to battery terminal and install battery cover. Refer to 86.15.15.

Handles, Locks, Latches and Entry Systems - Luggage Compartment Lid Lock Cylinder

Removal and Installation

Removal

1. Remove trunk floor carpet.
2. Remove battery cover. Refer to 86.15.19.
3. Remove trunk rear finisher. Refer to 76.19.44.
4. Remove adhesive tape from trunk access aperture
5. Slacken and remove lock barrel housing securing nuts and release housing from operating cable abutment bracket.

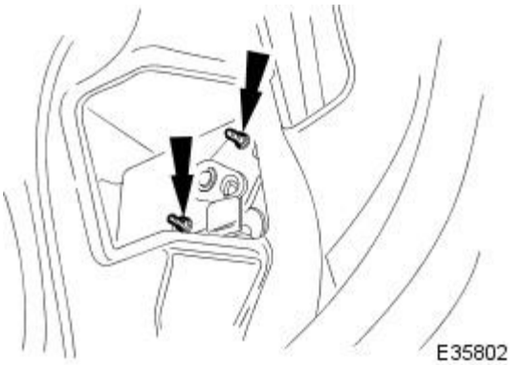

E35802

6. Disconnect cable from lock barrel operating arm and remove barrel and housing from trunk.

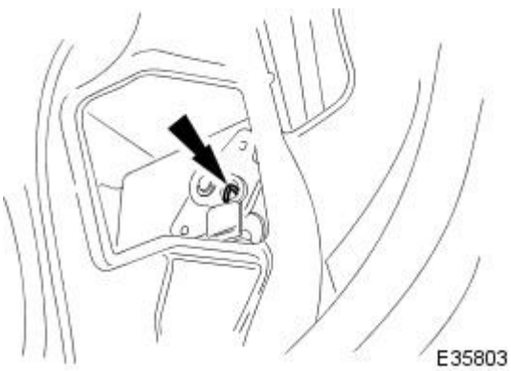

E35803

7. Remove circlip securing operating arm to lock barrel and remove operating arm and bias spring from barrel.

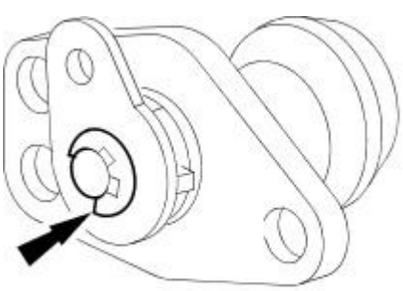

E35812

8. Remove barrel from housing.
   - Release detent plunger and spring from housing and withdraw barrel assembly.
   - Remove spring clip from housing groove.

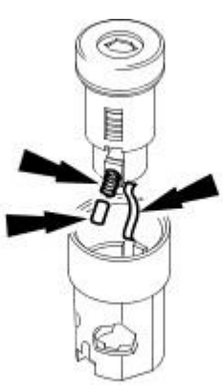

E35822

E35823

9. Using a flat-bladed screwdriver, ease barrel cover free and discard cover and plastic tension ring.

E35824

10. Remove:
    1. Closing plate.
    2. Shutter flap, tension spring and pivot pin.

3. Retaining key.
4. Shutter housing.

E35825

11. NOTE: If original discs and spacers are to be fitted, record sequence during removal.

Remove discs and spacer washers from barrel.

Installation

E35826

1. Fit and fully seat plastic sealing ring on barrel flange.

2. If original discs are to be fitted, proceed to step 3 noting positions recorded during removal.

3. Identify key cut code.

- Hold key so that cut outs can be identified and commencing at key grip, note and record cut out sequence.

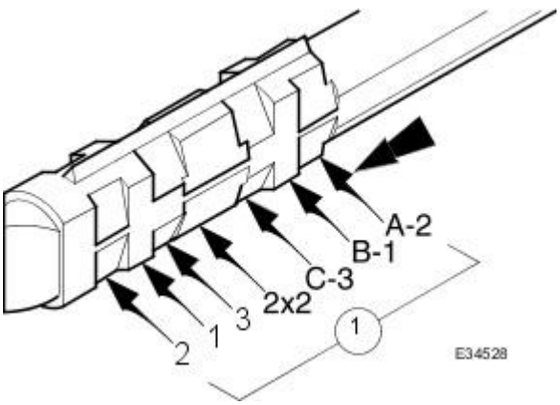

4. Fit lock discs to barrel.

1. Apply grease supplied to bore of lock barrel.
2. Ensure lock discs match recorded key code.
3. Grease the first seven discs and install them in the barrel in sequence with embossed spacers in between and orientated to align roller locations.
4. Fit wavy spring spacer.
5. Grease and fit final disc.
6. Through barrel slot, check discs for correct sequence and orientation.

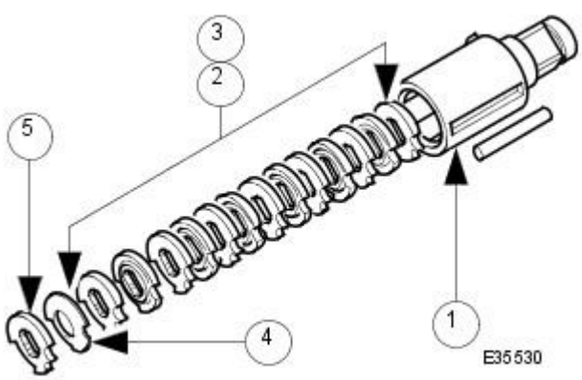

E35827

5. Align discs and spacers to accept the steel rollers grease rollers and fit into disc recesses via barrel slot.

E35828

6. Grease and fit shutter pivot and spring ensuring that spring is correctly tensioned.

E35829

7. Grease and fit detent plunger and spring to lock barrel recess.

8. Grease and fit spring clip into groove in bore of barrel housing.

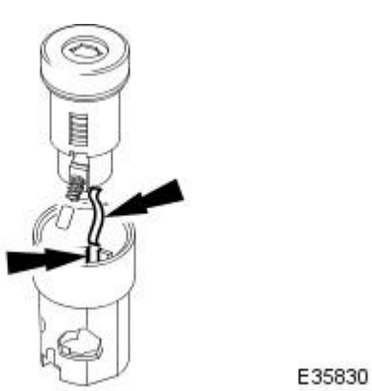

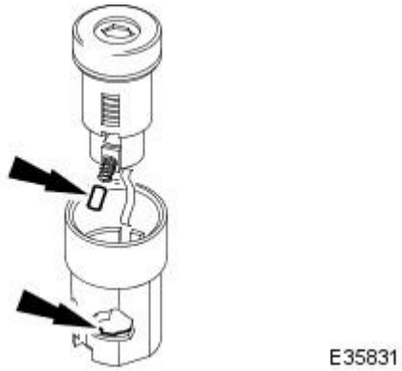

9. Aligning detent plunger with groove in housing, push barrel assembly home until plunger engages in rear recess.

10. Turn key to locate plunger in housing detent, check for satisfactory lock operation and remove key.

11. Fit operating arm and bias spring to barrel.

- Fit bias spring to barrel, locating lower tang on lock housing pillar.
- Position operating arm at housing, locate bias spring upper tang on arm pillar and seat arm with spring tensioned.

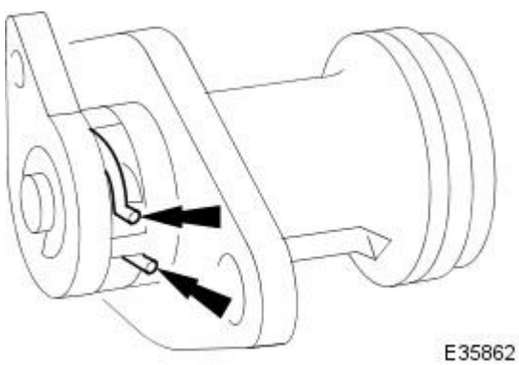

12. Fit and fully seat arm securing circlip.

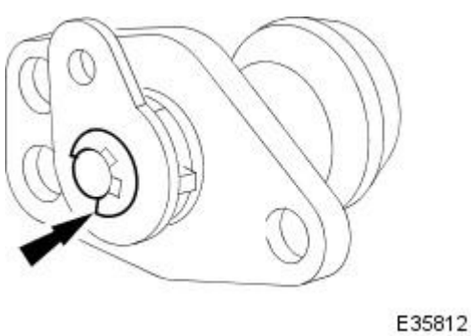

13. Position lock barrel and housing at cable abutment bracket and connect operating cable.

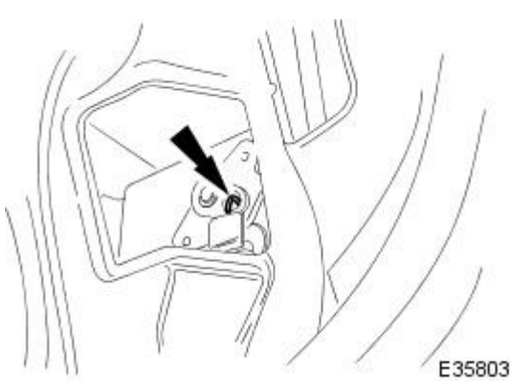

14. Position barrel and housing assembly on cable abutment bracket studs and fit and tighten securing nuts.

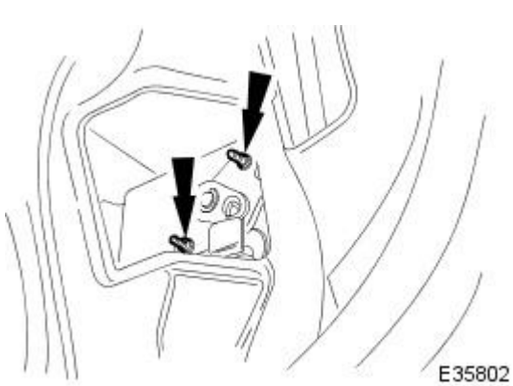

15. Fit new adhesive tape to panel aperture.

16. Fit trunk rear finisher. Refer to 76.19.44.

17. Fit trunk floor carpet.

18. Fit battery cover. Refer to 86.15.19.

Published: 11-May-2011

Handles, Locks, Latches and Entry Systems - Luggage Compartment Lid Warning Indicator Switch

Removal and Installation

Removal

1. Remove trunk floor carpet.
2. Remove trunk lock mechanism for access. Refer to 76.19.25.
3. Carefully ease warning switch tangs from trunk lock mechanism.

E35992

4. Remove warning switch assembly from lock mechanism.

Installation

1. Position warning switch on lock mechanism and fit and fully seat tangs.
2. Install trunk lock mechanism. Refer to 76.19.25
3. Install trunk floor carpet.

Wipers and Washers -

Torques

Component	Nm
Nut securing wiper arm to spindle	15,5 - 20,5

Published: 11-May-2011

Wipers and Washers - Wipers and Washers

Description and Operation

Windshield Wipers

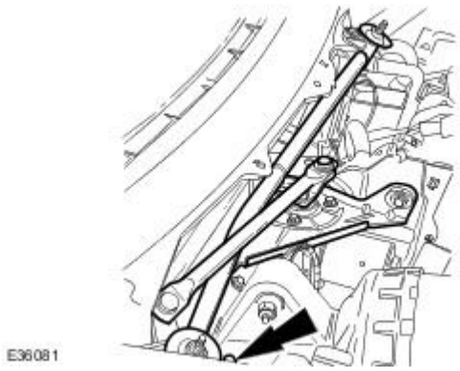

The conventional twin wiper system is driven by a single motor controlled from the right hand column stalk switch. The motor which has 'microswitch overload protection,' is mounted on a bracket below the plenum cover on the driver's side. Available only as a complete assembly including motor, the wiper system is handed to suit market requirements. The wiper arms are dedicated to either driver or passenger side installation and incorporate blade carriers that enable wipers to be parked in lowest possible position on the windshield. The wiper blades are of synthetic rubber. Windshield washer jet assemblies are mounted on the wiper arms.

Operating modes selected by a column mounted wiper control stalk switch, are normal, high speed, flick wipe, and six settings of intermittent operation with delays ranging from 2 to 20 seconds. On vehicles with rain sensing installed, the first intermittent setting is replaced by an AUTO position.

Windshield Washers

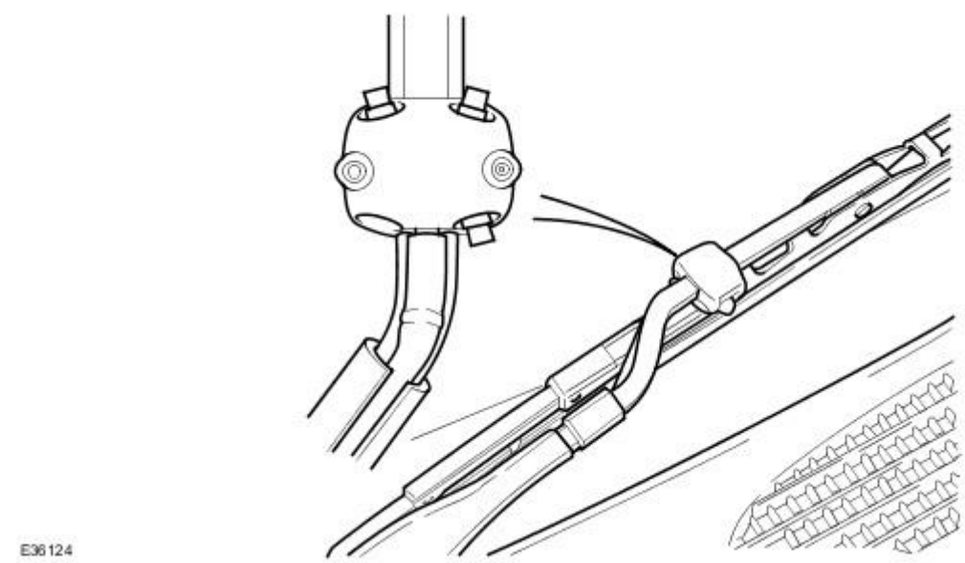

The windshield washers are of wiper arm mounted, running jet configuration, with each jet assembly incorporating a conventional nozzle plus three nozzles of silicone rubber 'duckbill' design. If the system is initially operated at low ambient temperatures, the 'duckbill' nozzles permit any frozen residual washer fluid to be ejected under pump pressure. The windshield wash feed tubes supplied assembled in the associated wiper arms fit at their lower ends onto connectors in the plenum cover. Located on the rear face of the washer fluid reservoir the windshield wash pump is connected by feed tubes to the plenum cover. The seven liter washer fluid reservoir is situated in a cavity formed by the front bumper, LH front valance and the front wing liner.

The windshield washers are operated by pressing the button at the end of the wiper control stalk switch. Pressing and releasing the button operates the washers for 1 - 1.4 seconds and the wipers complete three sweeps. An optional drip wipe function adds a further sweep of the wipers after a 4 second delay, to clear residual fluid from the windshield. If the button is held depressed, the washers and wipers will operate continuously for up to 20 seconds.

Headlamp Powerwash System

Headlamp Powerwash Jet Assembly (Retracted and Extended)

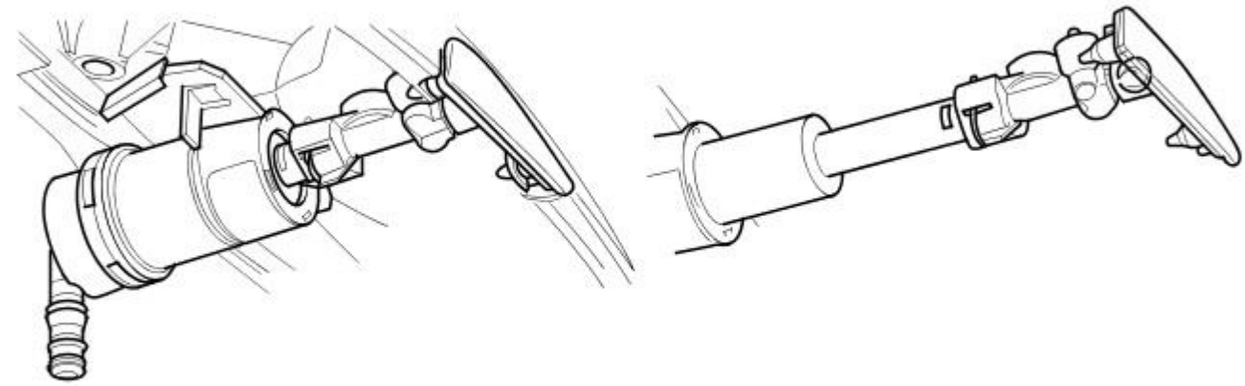

E36125

The headlamp powerwash system incorporates a telescopic nozzle unit mounted in the lower section of each headlamp. Each nozzle is connected via snap fittings to a powerwash pump mounted above the windshield wash pump on the rear face of the washer fluid reservoir.

The powerwash system operates in conjunction with the windshield washers when the ignition switch is in position II and the headlamp switch is in the dip or main beam position. When the powerwash pump is activated, the nozzle units under fluid pressure, extend forward approximately 72 mm and commence the wash cycle. The wash cycle consists of two 800 ms pulses separated by a six second delay. To conserve washer fluid, headlamp powerwash will only function on every sixth operation of the windshield wash switch.

When the 'WASHER FLUID LOW' message is illuminated, the windshield washers will continue to operate for a limited period but the headlamp powerwash will not function until the fluid level is restored.

Rain Sensing System

The rain sensing system installed for some markets, provides automatic wiper operation when rain is detected on the windshield. The system detects differing levels of rainfall and varies wiper operation ranging from intermittent to maximum continuous, to suit prevailing requirements.

The system which is brought into operation by selecting AUTO on the wiper control switch bezel, does not preclude normal manual control of wiper operation.

The system consists of a rain sensor, an electronic control module and a dedicated wiper control switch.

The rain sensor is an optical transducer that is sensitive to changes in infra-red light penetration of the windshield created by the refractive effects of water droplets. The sensor elements consist of two groups of light emitting diodes which alternately project infra-red light onto the windshield and a photo-diode that receives resulting reflections from the glass. All of the infra-red light is reflected back from a moisture-free windshield, resulting in a constant 5V output signal from the sensor and no wiper activation. Rain falling on the light sensing area of the windshield results in refraction and diffusion of a proportion of the projected light with a corresponding imbalance of light received by the photodiode. This results in pulsed outputs from the sensor, the frequency and duration of which are directly proportional to the number and size of water droplets respectively. These pulses together with wiper switch position signals are received by the sensor control module and processed to mimic column switchgear operation. In this recognisable form, signals are input to the body processor module (BPM) where they are interpreted as normal wiper operation requests.

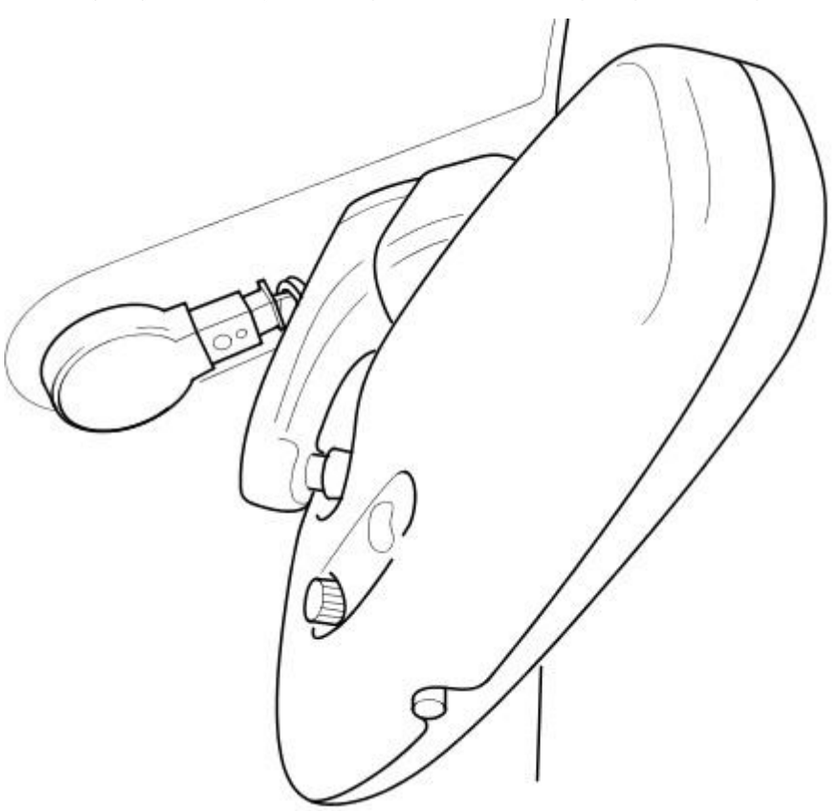

E36054

The rain sensor unit is installed on the inside of the windshield within the rear view mirror stem cover. The unit is secured to the glass by a special adhesive that facilitates service removal. When installing a rain sensor unit, it must be positioned in the clear circle within the obscuration band.

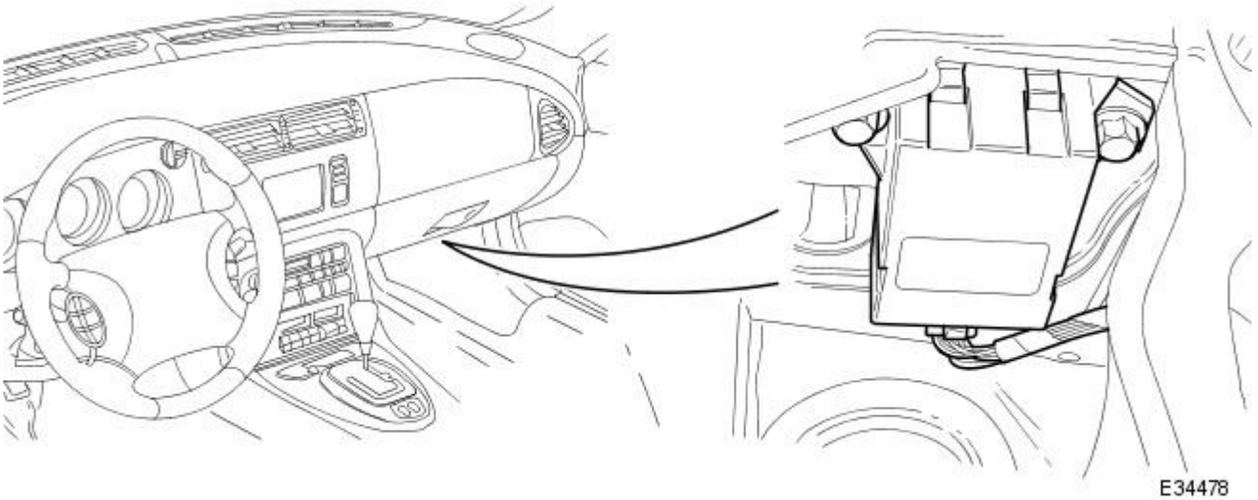

The rain sensor control module is a non-serviceable unit installed on the passenger side dash panel and connected to the rain sensor unit and the body processor module.

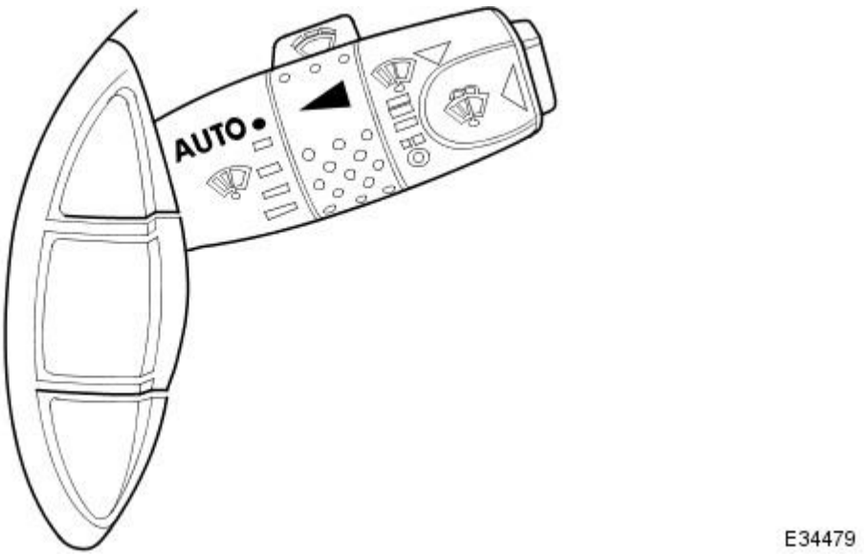

The column mounted wiper control stalk switch on vehicles with rain sensing installed, has an AUTO position (this replaces the first intermittent setting on non rain-sensing wiper controls), five intermittent settings, and normal, high speed and flick wipe positions.

Wipers and Washers - Headlamp Washer Jet

Removal and Installation

Removal

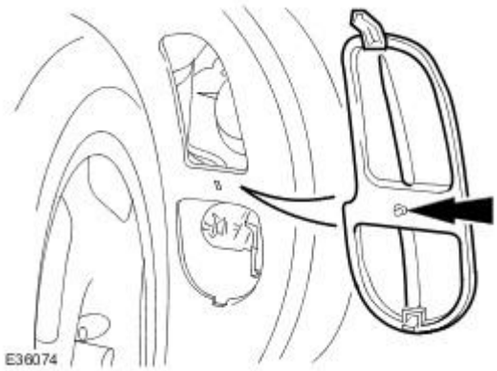

1. Turn steering wheel to full lock position that provides access to appropriate wheel arch liner.
2. Remove wheel arch liner access panel.
   - Rotate liner access cover fastener 1/4 turn and remove cover from vehicle. Ensure that fastener is retained.

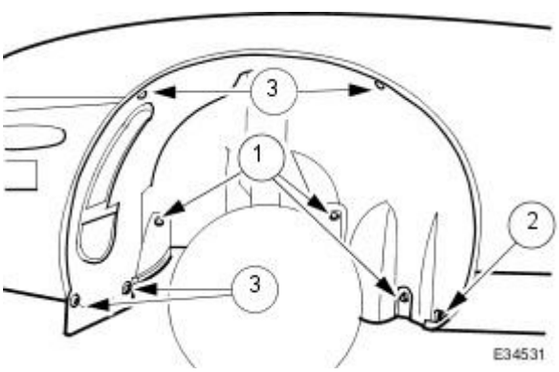

3. Remove clips securing front of wheel arch liner to fender.

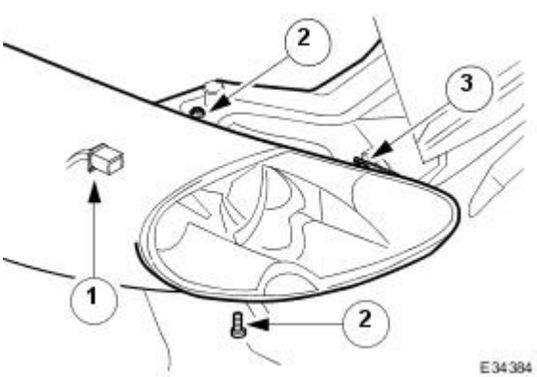

4. Position front of wheel arch liner for access.
5. Remove headlamp rear trim cover and water deflector.
6. Remove headlamp fixings.
   1. Disconnect headlamp harness multiplug.
   2. Slacken and remove headlamp upper and lower securing bolts.
   3. Slacken headlamp securing nut.

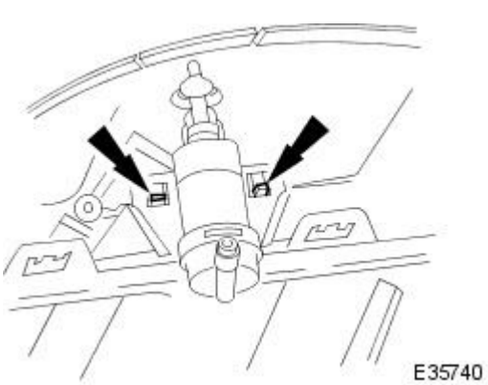

7. Remove powerwash jet assembly from headlamp.
   - Carefully withdraw and position headlamp for access to underside, release washer jet tangs and remove assembly from headlamp.

Installation

1. Fit powerwash jet assembly to headlamp, ensuring tangs fully seat.
2. Fit headlamp assembly to BIW.
3. Fit but do not fully tighten headlamp upper and lower securing bolts.

4. Align headlamp with vehicle profile as detailed in 501-18.
5. Tighten headlamp securing nut.
6. Fully tighten headlamp securing bolts.
7. Connect feed hose to powerwash jet assembly.
8. Connect harness multiplug to headlamp.
9. Fit headlamp rear trim panel and water deflector.
10. Fit and fully seat front of wheelarch liner and secure with new fasteners.
11. Fit and fully seat access panel to wheelarch liner and rotate fastener 1/4 turn to secure.
12. Return steering to straight ahead position.
13. Carry out headlamp beam alignment.

Wipers and Washers - Rain Sensor

Removal and Installation

Removal

1. Remove battery cover and disconnect ground cable from battery terminal. Refer to 86.15.19.
2. Remove cover from rear view mirror base.

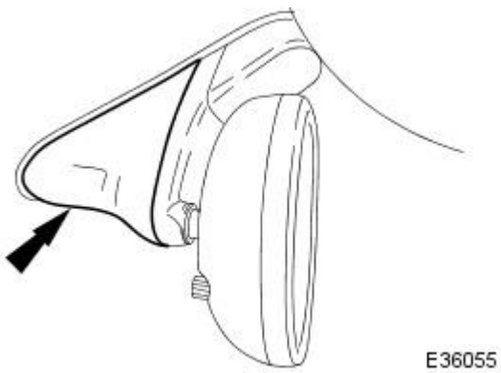

3. Disconnect flying lead from sensor unit connector.

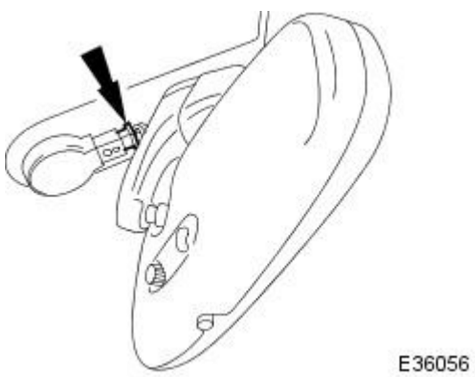

4. Using a thin plastic blade, carefully remove sensor unit from windshield.

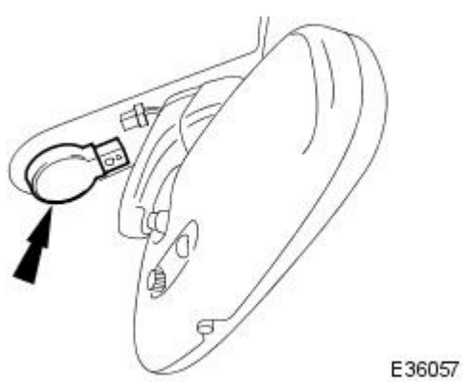

5. Using an approved solvent, remove residual adhesive from windshield.
6. If sensor is to be re-used, remove adhesive pad and clean base of unit using an approved solvent.

Installation

1. Install new adhesive pad.
   - Peel backing paper from one side of new adhesive pad.
   - Position pad correctly in clear area of obscuration band and press firmly to fully seat.
   - Peel remaining backing paper from adhesive pad.

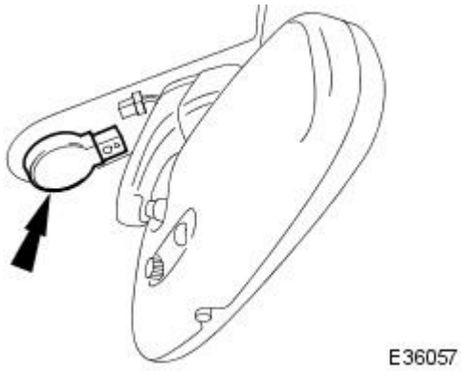

2. Ensuring sensor is correctly orientated, press firmly into position on adhesive pad.

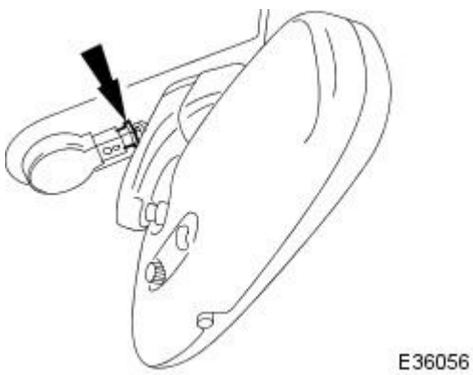

3. Connect flying lead connector to sensor unit.

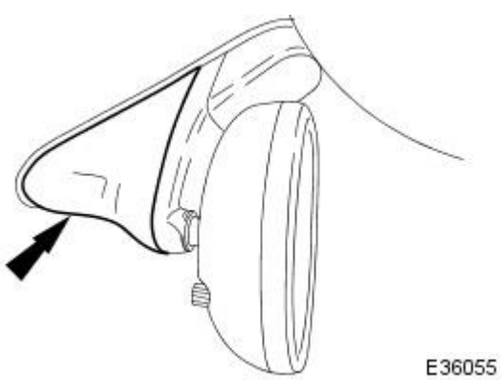

4. Install cover over sensor and mirror base ensuring tangs fully engage.

5. Connect ground cable to battery terminal and install battery cover. Refer to 86.15.15.

Wipers and Washers - Rain Sensor Module

Removal and Installation

Removal

1. Remove battery cover and disconnect ground cable from battery terminal. Refer to 86.15 19.
2. Remove glove box for access. Refer to 76.52.03.
3. Remove two bolts securing module to passenger side dash panel.

4. Disconnect harness connector from module and remove module from vehicle.

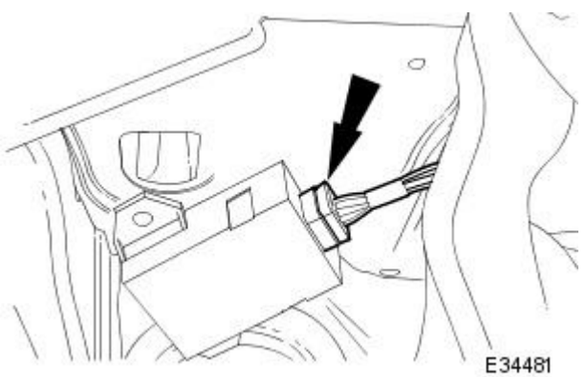

Installation

1. Position module at dash panel and connect harness connector.
2. Install module bolts.
3. Install glove box.
4. Connect ground cable to battery terminal and install battery cover. Refer to 86.15.15.

Wipers and Washers - Windshield Washer Pump and Headlamp Washer Pump

Removal and Installation

Removal

1. Raise front of vehicle and support on stands.
2. Remove LH front wheel.
3. Remove LH front wheel arch liner. Refer to 76.10.90.
4. Position a suitable drain receptacle under fluid reservoir.
5. Supporting reservoir, carefully release pump from connectors and seals.

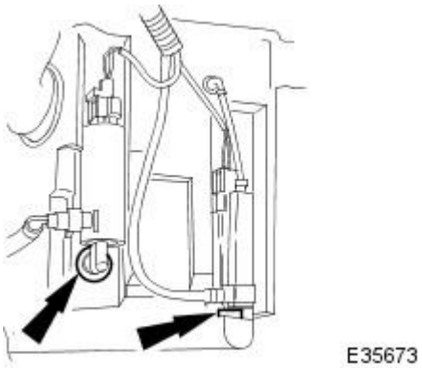

6. Disconnect pump hoses and harness multiplug.

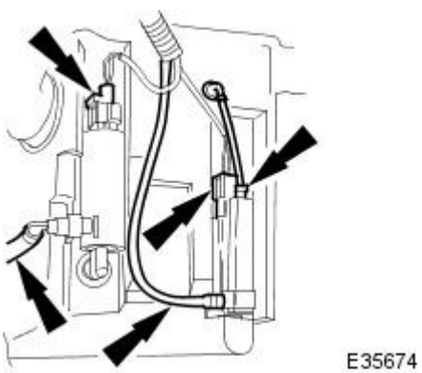

7. Remove and discard pump to reservoir sealing washers and clean surrounding area of reservoir.
8. Remove drain receptacle.

Installation

1. Fit and fully seat new sealing washers to reservoir.
2. Apply suitable lubricant to outer face of sealing washers.
3. Positioning pump at reservoir, press and firmly seat connectors firmly in sealing washers.
4. Connect hoses to pump and reservoir.
5. Open hood and fill reservoir with correct fluid.
6. Check that all connections are free from leakage.
7. Close hood.
8. Connect harness multiplug to pump
9. Fit LH wheel arch liner. Refer to 76.10.90.
10. Fit LH front road wheel.
11. Raise vehicle, remove stands and lower vehicle onto wheels.

Wipers and Washers - Windshield Washer Reservoir

Removal and Installation

Removal

1. Fit LH fender cover and open hood.
2. Raise front of vehicle and support on stands.
3. Remove LH front wheel.
4. Remove LH front wheel arch liner. Refer to 76.10.90.
5. Remove windshield washer and headlamp powerwash pumps from reservoir. Refer to 84.10.21.
6. Remove elbow from reservoir filler neck.

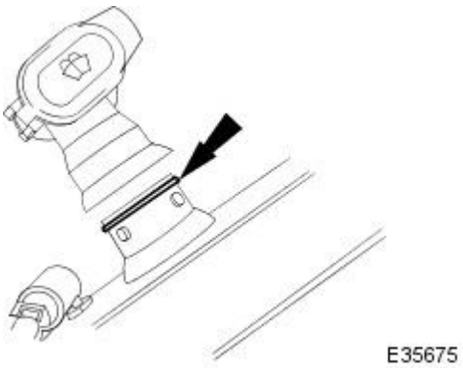

7. Remove filler neck.
   - Carefully pull lower end of filler neck from reservoir and discard sealing ring.
   - Remove and discard 'O' ring seal from filler neck upper end.

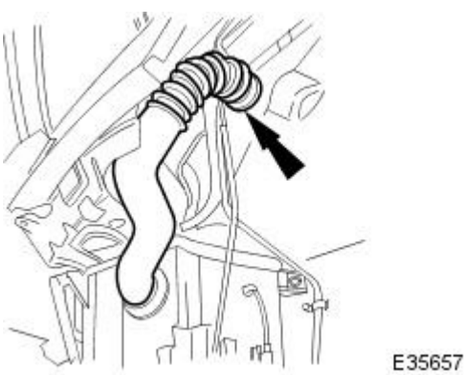

8. Slacken and remove the three reservoir to BIW securing bolts and remove reservoir from vehicle.

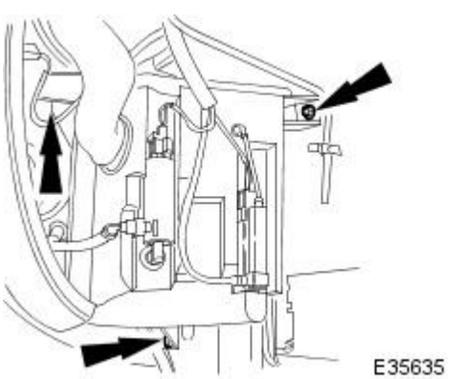

Installation

1. Position reservoir in wheelarch, align with BIW holes and fit and tighten the three securing bolts.
2. Clean pump seal and filler neck seal locations.
3. Fit and fully seat new windshield washer and powerwash pump sealing washers to reservoir apertures.
4. Fit and fully seat new filler neck lower sealing ring to reservoir aperture.
5. Apply suitable lubricant to sealing washers and filler neck seal.

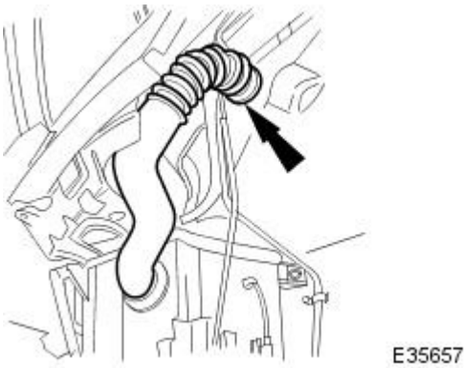

6. Position filler neck upper end in BIW aperture and fully seat lower end in sealing ring.

7. Fit windshield washer and powerwash pumps to reservoir. Refer to 84.10.21.
8. Fit new 'O' ring seal to upper end of filler neck. and apply suitable lubricant.
9. Fit and firmly seat filler elbow to upper end of filler neck.
10. Fill reservoir with correct fluid.
11. Check that all connections are free from leakage.
12. Connect harness multiplugs to pumps.
13. Fit LH wheel arch liner. Refer to 76.10.90.
14. Fit LH front road wheel.
15. Raise vehicle, remove stands and lower vehicle onto wheels.
16. Remove fender cover and close hood.

Wipers and Washers - Windshield Wiper Motor

Removal and Installation

Removal

1. Remove battery cover and disconnect earth cable from battery terminal. Refer to 86.15.19.
2. Remove wiper arm and blade assemblies. Refer to operations in this section.
3. Remove plenum chamber cover. Refer to Section 501-02.
4. Slacken and remove the bolt securing the driver side water deflector to the plenum chamber and remove the deflector.

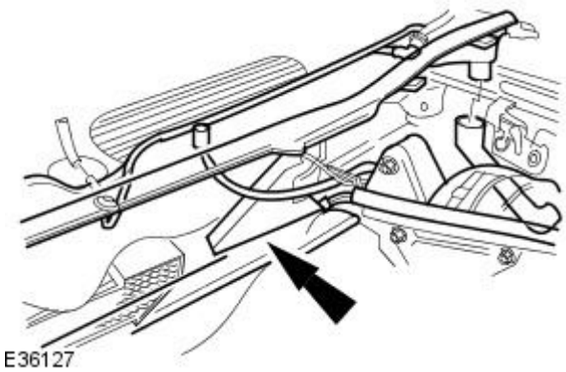

5. Remove convertible model bulkhead brace.
    1. Slacken and remove the driver side bulkhead brace rear securing bolt.
    2. Slacken and remove the bulkhead brace front securing nut and remove brace from vehicle.

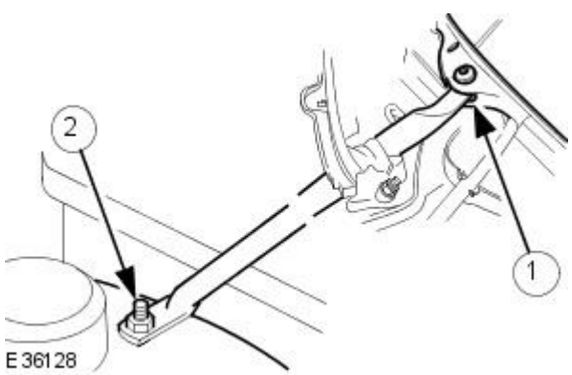

6. Sever the strap securing the wiper motor multiplug to the securing bracket and disconnect the multiplug.

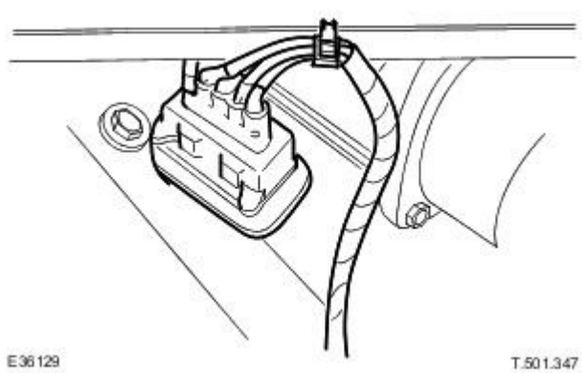

7. Slacken and remove the three wiper motor/linkage securing bolts and withdraw the motor and linkage from the plenum chamber.

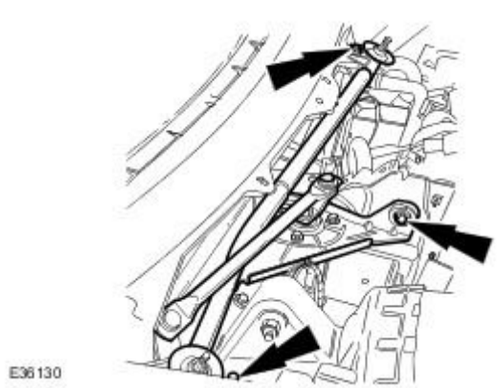

8. Remove the wiper motor/linkage mounting rubbers and spacers.

Installation

1. Fit mounting rubbers and treat the bores with a suitable lubricant.
2. Fit spacers to mounting rubbers.
3. Position wiper motor/linkage assembly in the plenum chamber and fit and tighten securing bolts.
4. Connect wiper motor harness multiplug and secure to bracket with new retaining strap.
5. Fit convertible model bulkhead brace.
   - Position driver side bulkhead brace, locating front on suspension turret stud and fit and tighten rear securing bolt.
   - Fit and tighten nut securing front of brace to suspension turret.
6. Position driver side water deflector in plenum chamber and fit and tighten securing bolt.
7. Fit plenum chamber cover. Refer to Section 501-02.
8. Fit wiper arm assemblies. Refer to operations in this section.
9. Connect earth cable to battery terminal and fit battery cover. Refer to Section 414-01.

Wipers and Washers - Wiper Pivot Arm

Removal and Installation

Special Tool(s)	
E36413	Windshield wiper arm extractor 18G2

Removal

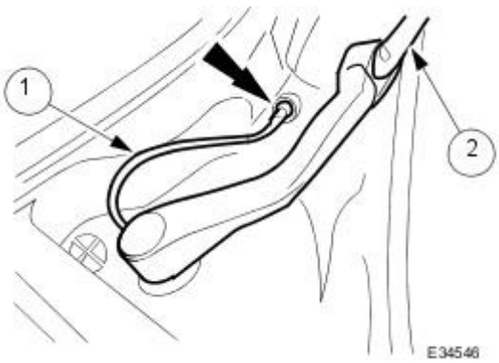

1. Disconnect windshield washer tubing.

1. Open the hood.
2. Disconnect wiper arm windshield washer tubing from plenum cover connector.
3. Note position of wiper blade on windshield.

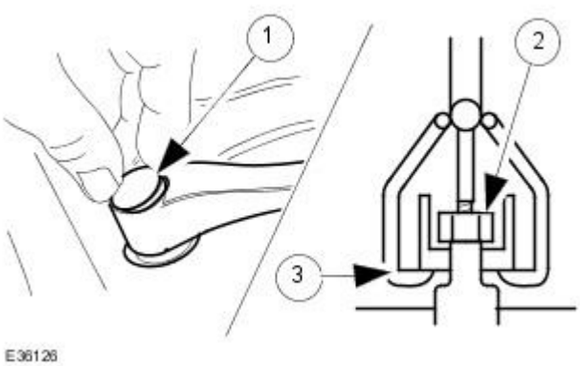

2. Withdraw wiper arms from spindles.

1. Remove plastic cover from wiper arm securing nut.
2. Slacken but do not remove wiper arm securing nut.
3. Fit extractor 18G2 and ensuring that wiper and plenum cover are not damaged, release wiper arm from tapered spindle.

- Remove extractor, remove wiper arm securing nut and lift wiper arm off spindle.

Installation

1. Fit wiper arm and blade.

- Fit wiper arm and blade assembly onto spindle splines aligning blade to original position on windshield.
- Fit wiper arm securing nut.
- Supporting the wiper arm, carefully tighten the securing nut to press arm on to tapered splines.

2. Fit plastic cover over securing nut.

- Connect washer tubing to plenum cover.
- Close hood.

Published: 11-May-2011

Convertible Top - Convertible Top

Description and Operation

Description

The convertible top has a fully lined and padded interior, and is mounted on an aluminum frame with steel linkages providing lightness with good structural strength.

When lowered, the top folds to a low stack height in the body and is concealed by a matching soft cover. A front seal shot moulded to the windshield header and 'A' posts, achieves highly efficient weatherproofing, reduced noise levels and improved aerodynamics.

The green tinted glass backlight is bonded to the top to achieve a semi-flush finish.

Power Operation

Convertible Top Hydraulic Power Pack

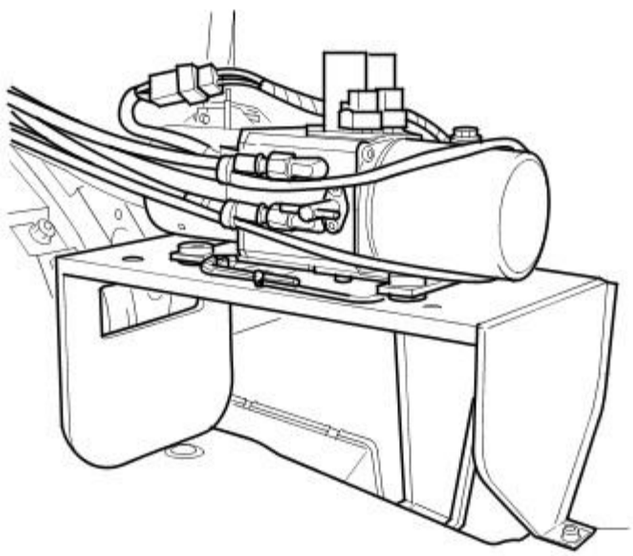

E36131

Powered actuation and latching is provided by an electrically driven hydraulic pump installed in RH side of trunk. With the ignition switch in position I or II, both the convertible top and rear quarter glass are operated by a single switch located forward of the 'J' gate and marked 'ROOF. The top is lowered by pressing and holding the rear of the switch until top movement ceases.When the top unlatches, an audible alarm sounds for 0.7 seconds , the rear quarters fully open and any fully closed door glass lowers 12 mm. The audible alarm operates again when the top starts to move. If the door glass is closed, the rear quarters close, then all glass lowers 12 mm.

When the top is fully lowered, the audible alarm operates and the door glass returns to the fully closed position. The top is raised by pressing and holding the front of the switch until the top is fully erected and latched.When the top is fully raised and latched, the audible alarm operates again and all glass closes.

Operation of the convertible top is inhibited at vehicle speeds in excess of 16 km/h (10 mile/h). If the vehicle exceeds this speed when the top is moving to the lowered position, it will continue to the fully down position. Should the vehicle exceed this speed when the top is being raised, further movement will be inhibited until the speed is reduced.

Emergency Manual Raising of Top

Manual Latching of Top Using Key Provided

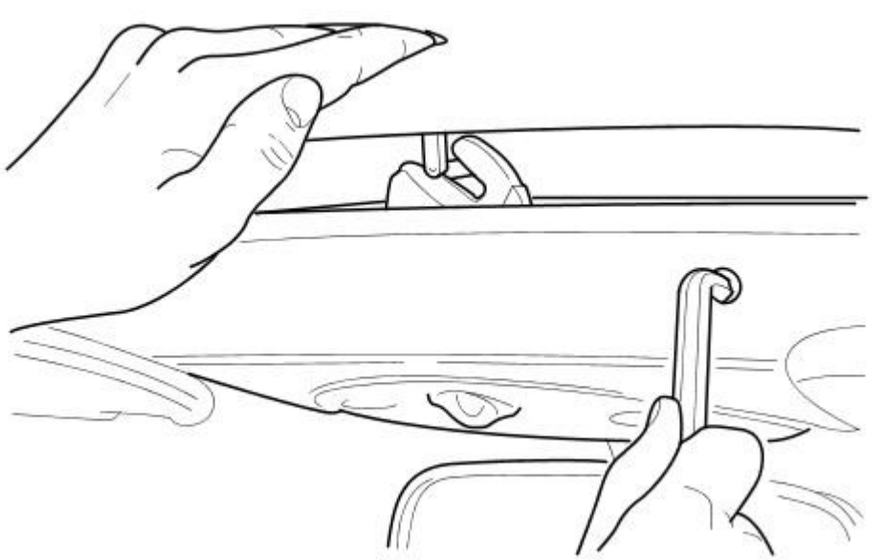

E36087

In the event of latch failure when the top is raised, a visual warning will illuminate on instrument panel. In such an emergency, the top must be manually positioned using a center pull down facility, then latched using a key stowed alongside the top operating pump. To manually operate the latch, the key is inserted in the recess in the windscreen header, turned clockwise to ensure the latch is fully

released, then turned counter-clockwise to lock.

The top can also be manually raised in the event of failure to power operate. In such a situation, the pump isolating valve must first be turned fully counter-clockwise to the manual operation position. Manual latching is then achieved as described above. When manually raising the top, the linkages from the frame to the wheel arches must be moved to the over-center position.

Emergency Manual Lowering of Top

In the event of failure of powered lowering of the top, the following procedure must be adopted. Failure to follow this procedure when manually lowering the top can result in damage to the frame and operating linkages.

1. **1.** Lower the rear quarter glass by pressing the rear of the 'ROOF' button once.
2. **2.** Rotate the pump valve (located in the RH side-well of the trunk) counter-clockwise to the manual operation position.
3. **3.** Remove the blanking plug from the header trim, insert the Allen key provided (stowed alongside the top pump) and unlatch the top by turning the key clockwise.

Direction of Manual Thrust During Emergency lowering of Top

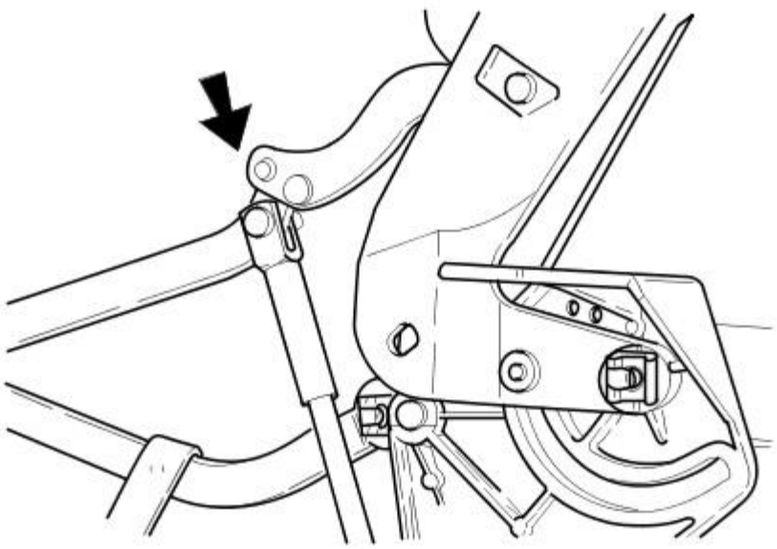

E36082

4. **4.** Reaching behind the top rear quarter curtains, pull the rams and linkages at both sides firmly downwards as far as possible.
5. **5.** Manually lower top to stowed position, if necessary repeating step 4 above.

Convertible Top - Convertible Top Assembly

Removal and Installation

Removal

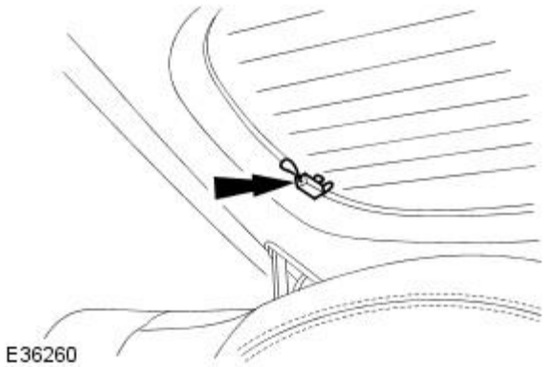

1. Remove carpet from convertible top stowage compartment.
2. Disconnect backlight heater harness connectors.

3. Ensuring that backlight heater harness is clear, power top to fully lowered position.
4. Remove rear seat cushion. Refer to 76.70.37.
5. Remove rear seat squab. Refer to 76.70.38.
6. Remove LH and RH rear quarter trim cappings.
7. Remove LH and RH rear quarter trim panels. Refer to 76.13.73.
8. Remove rear speaker assembly (premium ICE only). Refer to 86.51.06.
9. Slacken and remove nuts securing squab panel stiffener bracket to BIW and remove bracket from vehicle.

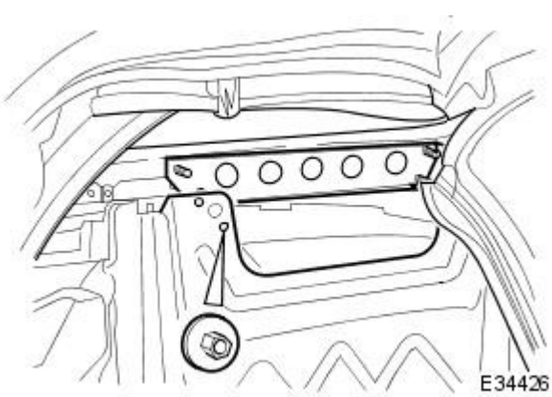

10. Remove heated backlight. Refer to 76.81.11.
11. Slacken and remove bolt securing ground cable to frame and position cable clear of frame.

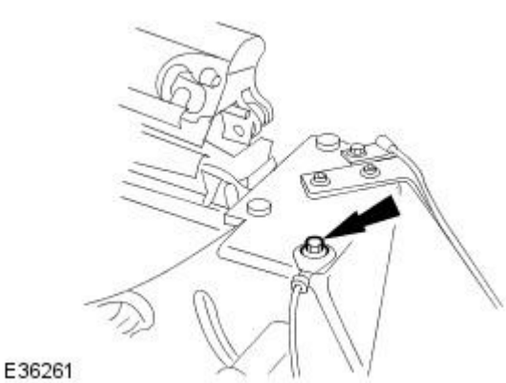

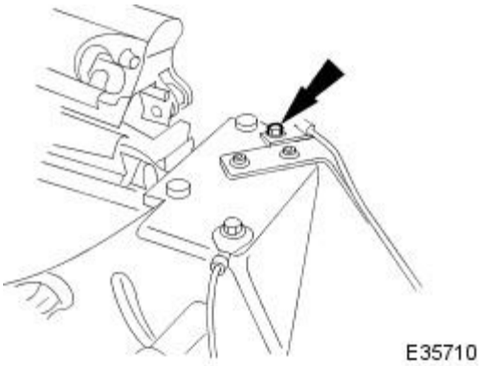

12. Slacken and remove security aerial retaining clip securing bolt.

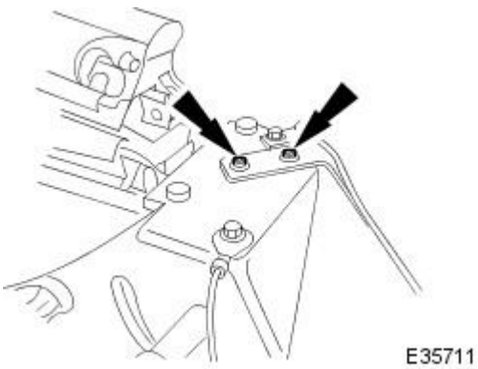

13. Slacken and remove security aerial mounting bracket securing screws and position aerial clear of top.

14. NOTE: Do not allow top to latch.

Power top to 3/4 closed position.

15. Remove battery cover and disconnect ground cable from battery terminal. Refer to 86.15.19.

16. Position trunk RH liner for access and turn hydraulic pump valve fully counter- clockwise to the manual operation position.

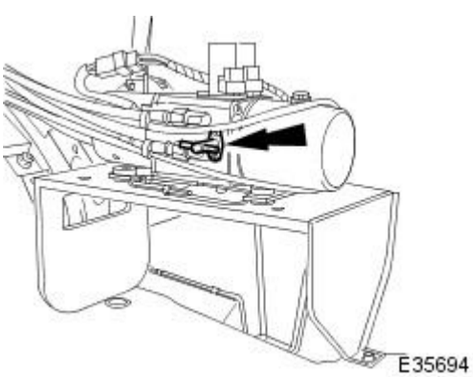

17. Remove backlight link lever securing clips and position link levers for access.

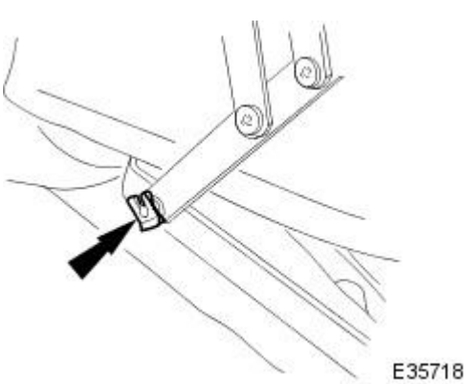

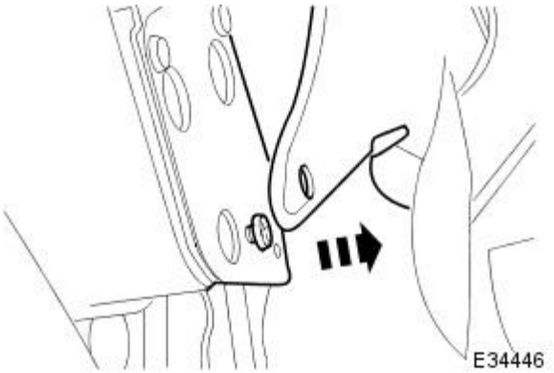

18. Remove mounting bracket cover plate securing screws

- Slacken and remove mounting bracket cover plate lower securing screw, position headlining for access and remove the two remaining screws.

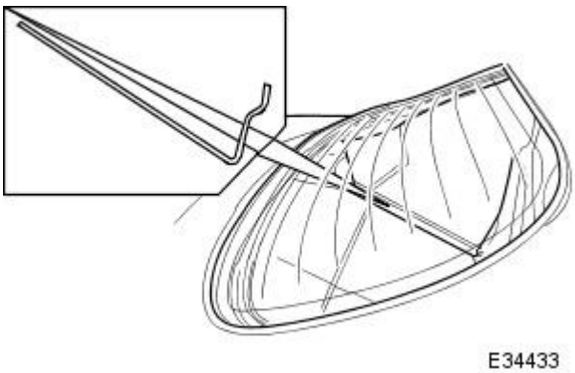

19. Release headlining rear securing rods from securing clips.

E34434

20. Slacken and remove nuts securing rear tack strip to BIW.

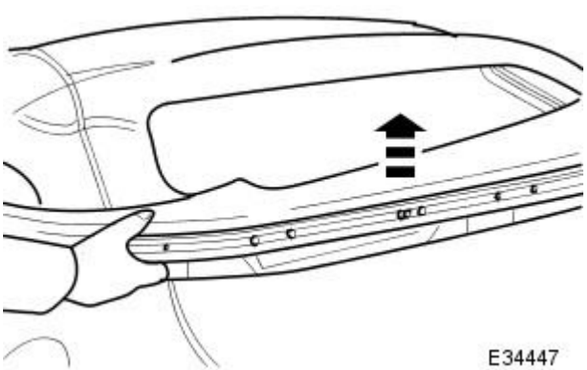

21. Withdraw tack strip from vehicle and remove end covers from tack strip.

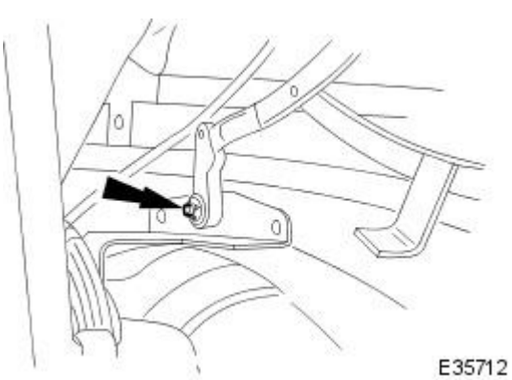

22. Remove over-centre link lever retaining clips, remove nylon spacers and position link levers for access.

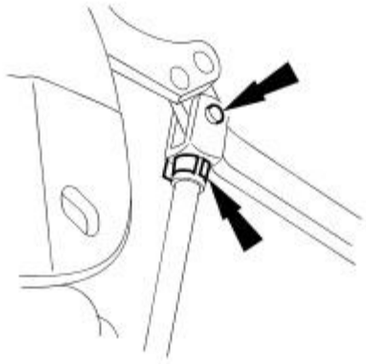

23. Disconnect hydraulic cylinder actuating rods from convertible top frame.

- Remove spring clip/pin securing each hydraulic cylinder rod to frame.
- Partially retract cylinder rod and withdraw from frame.

E34457

24. Move each hydraulic cylinder clear of outer half pivot, position cylinder to facilitate top removal and remove and retain wavy washer from pivot.

25. Tape plastic sheet over trunk lid, rear panel and fenders to protect paint

26. Slacken and remove upper bolts securing mounting brackets to BIW.

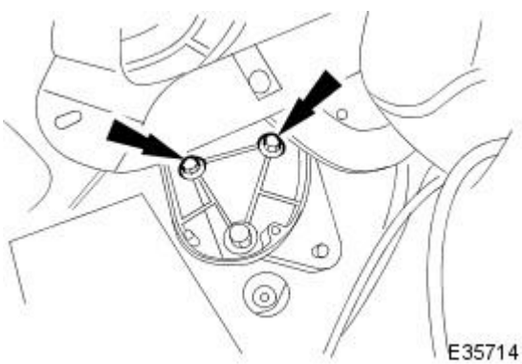

27. Slacken but do not remove mounting bracket lower securing bolts.

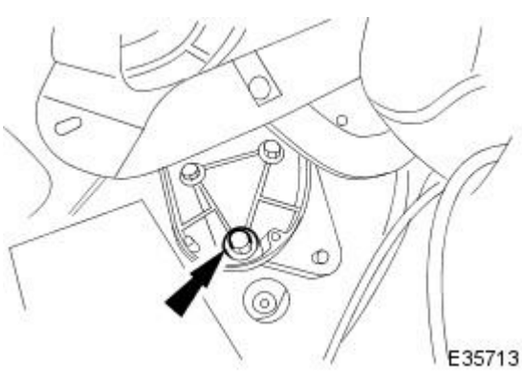

28. Manually lower convertible top.

29. Slacken and remove rear quarter glass inner seal rear securing screws.

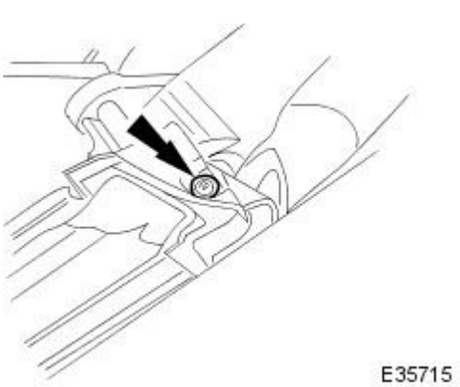

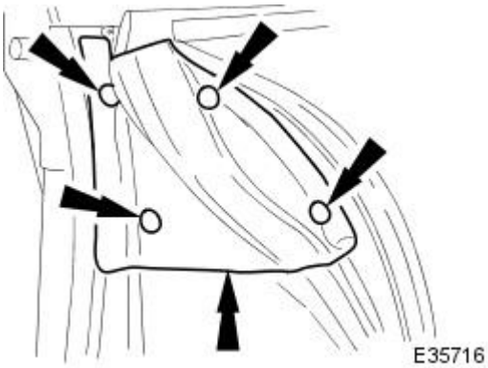

30. Release and discard rear quarter glass inner seal front fir tree fasteners and remove seals from carriers.

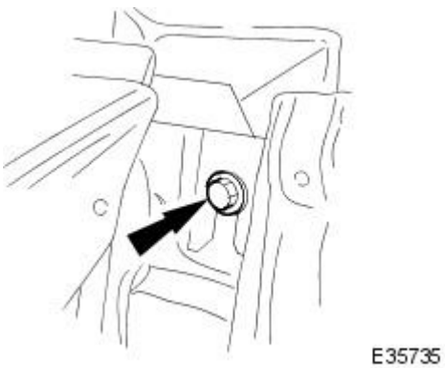

31. Slacken the front bolt securing each seal carrier to BIW.

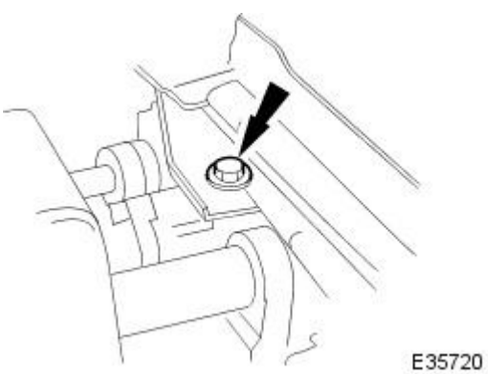

32. Slacken and remove the rear bolts securing each seal carrier to BIW and remove seal carriers.

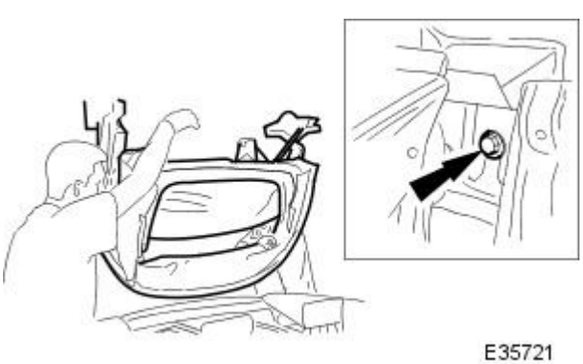

33. Ensure that mounting bracket lower bolts are sufficiently slackened, then with assistance, carefully lift and remove convertible top assembly from vehicle.

Installation

1. With assistance, carefully lift convertible top assembly and position in vehicle, locating lower slot in each mounting bracket on BIW bolt.

2. Fit mounting bracket upper securing bolts.

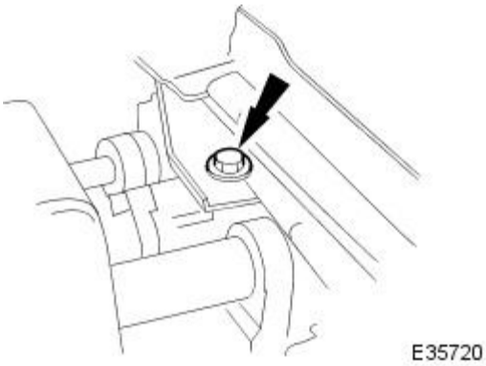

3. Position rear quarter glass inner seal carriers and fit but do not tighten rear securing bolts.

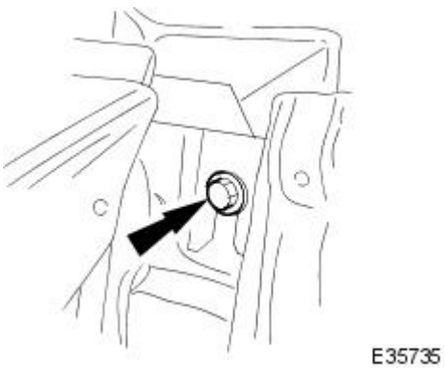

4. Fully tighten seal carrier front securing bolts.

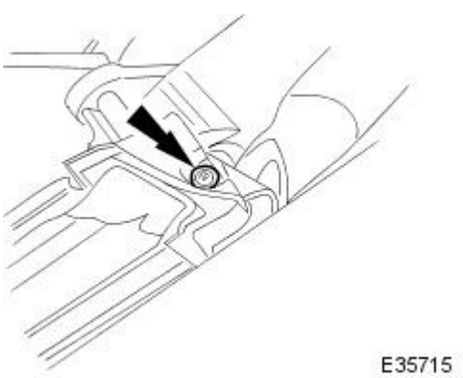

5. Fit and fully seat inner seals in carriers and fit and tighten rear securing screws.

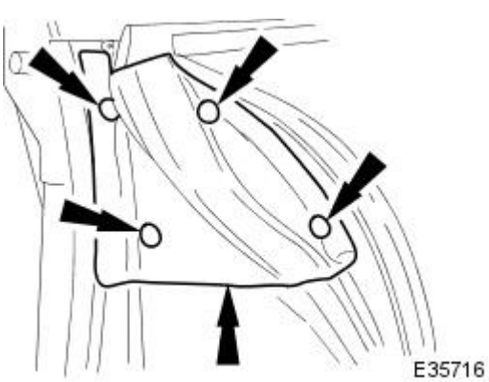

6. Secure front of inner seals with new fir tree fasteners.

7. Manually raise convertible top.

8. Fit wavy washers onto half pivots and fit and fully seat hydraulic cylinders.

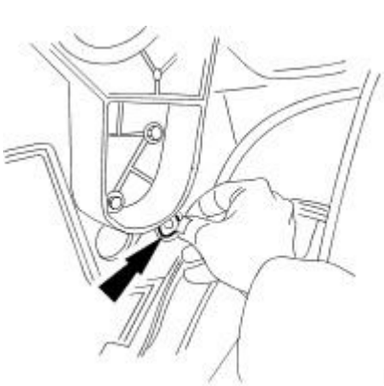

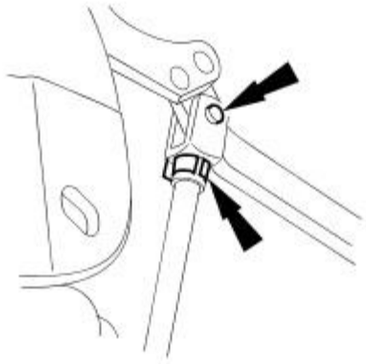

E36256

9. Fit hydraulic cylinder actuating rod ends to frame.

- Align and extend cylinder rods to convertible top frame.
- Position end of each rod on linkage and secure with clip/pin assemblies.

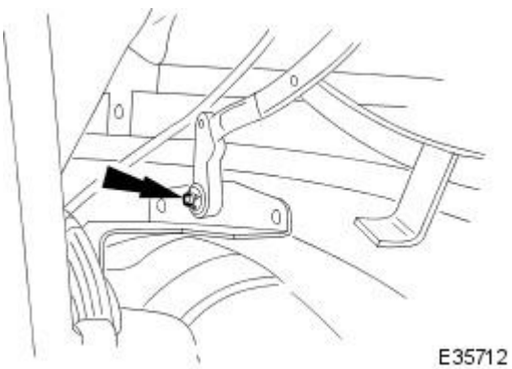

E35712

10. Position over-centre link levers, fit nylon spacers and fit link rod securing clips.

E34434

11. Position tack strip on BIW and fit end covers.

12. Commencing in centre, fit and tighten tack strip securing bolts.

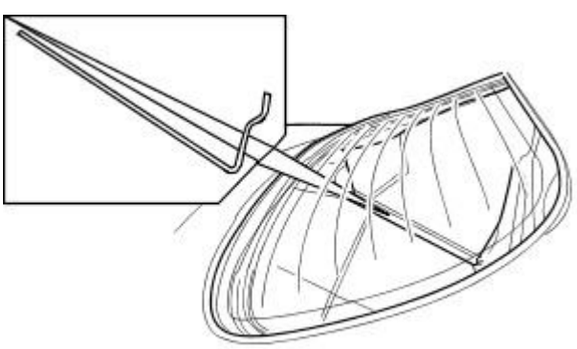

E34433

13. Fit and fully seat headlining rear securing rods.

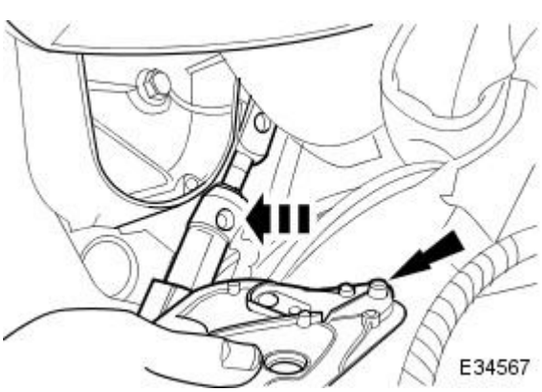

E34567

14. Fit mounting bracket cover plates.

- Fit and fully seat mounting bracket cover plates, ensuring that half pivots locate correctly in ram recesses.
- Fit and tighten upper securing screws.

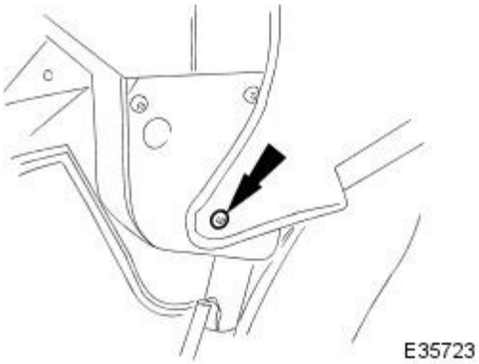

15. Position headlining rear quarters over mounting bracket cover plates and fit and tighten lower securing screws.

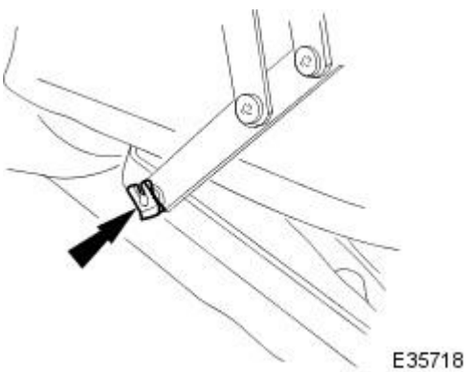

16. Position backlight link levers and fit and fully seat securing clips.

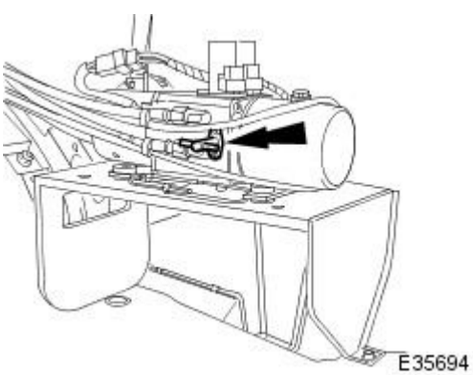

17. Turn hydraulic pump valve fully clockwise to power operation position.

18. Position and fully seat trunk RH liner.

19. Connect ground cable to battery terminal. Refer to 86.15.15.

20. Manually guiding latch striker into header mechanism, power convertible top to fully raised position

21. Accessing through cover plate apertures, tighten mounting bracket securing bolts.

22. Tighten rear quarter inner seal carrier rear securing bolts.

23. Remove protective sheet from rear bodywork.

24. Power convertible top to fully lowered position and back to fully raised position, checking for satisfactory operation and ensuring thar cover is correctly tensioned and fre from ripples or sagging

25. Position security aerial and fit and tighten mounting bracket securing screws.

26. Fit and tighten security aerial 'P' clip securing bolt.

27. Position ground cable eyelet and fit and tighten securing bolt.

28. Position squab panel stiffener bracket and fit and tighten securing bolts.

29. Fit heated backlight. Refer to 76.81.11.

30. Fit carpet to convertible top stowage compartment.

31. Fit rear speaker assembly (premium ICE only). Refer to 86.51.06

32. Fit rear quarter trim panels. Refer to 76.13.73.

33. Fit rear quarter panel cappings.

34. Fit rear seat squab. Refer to 76.70.38.

35. Fit rear seat cushion. Refer to 76.70.37.

36. Connect backlight heater.harness connectors.

37. Fit battery cover.

Convertible Top - Convertible Top Headliner

Removal and Installation

Removal

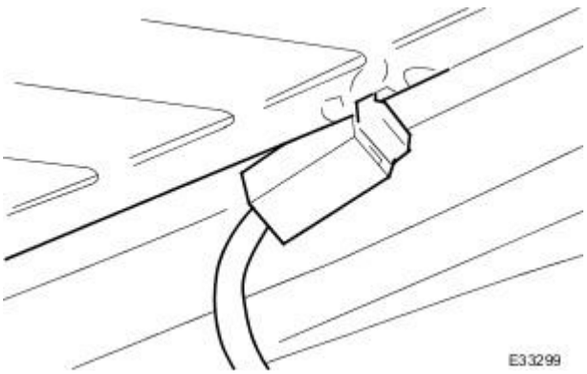

1. Remove carpet from convertible top stowage compartment.
2. Disconnect heated backlight harness connectors and position harness clear of top.

3. Power top to fully down position.
4. Remove rear seat cushion. Refer to 76.70.37.
5. Remove rear seat squab. Refer to 76.70.38.
6. Remove rear quarter casing cappings Refer to 76.13.73.
7. Remove rear quarter casings. Refer to 76.13.73.
8. Remove rear speaker -Premium ICE only. Refer to 86.51.06.
9. Slacken and remove squab panel stiffener bracket to body securing nuts and remove bracket.

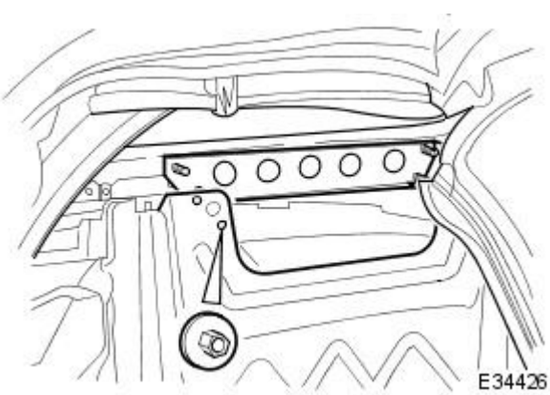

10. NOTE: Do not allow top to latch.

    Power top to 3/4 closed position.
11. Remove battery cover and disconnect ground cable from battery terminal. Refer to 86.15.19.
12. Position trunk RH liner for access and turn hydraulic pump valve fully counter-clockwise to manual operation position.

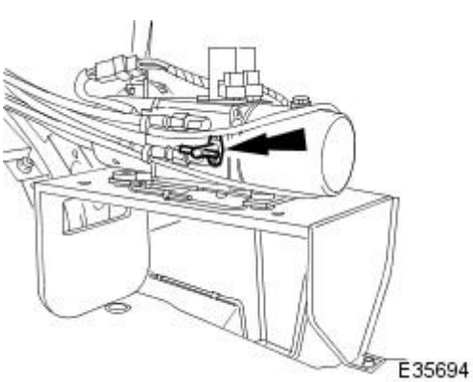

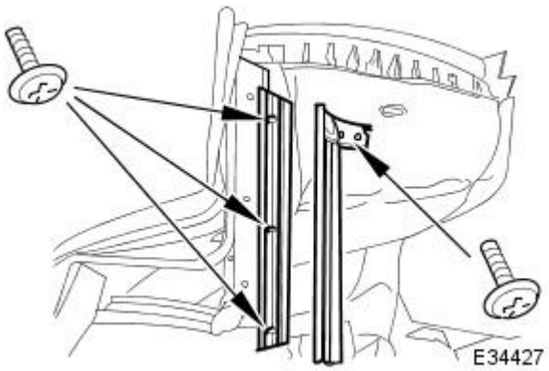

13. Remove LH cantrail seal and carrier.

- Slacken and remove screws securing LH cantrail seal to frame and withdraw seal.
- Slacken and remove screws securing LH cantrail seal carrier and remove seal carrier from vehicle.

14. Slacken and remove screws securing RH cantrail seal to frame and remove seal.

15. Slacken and remove screws securing RH cantrail seal carrier and remove seal carrier.

16. Remove LH main column seal and carrier.

- Withdraw LH main column seal from carrier.
- Slacken and remove screws securing seal carrier and remove carrier from vehicle.

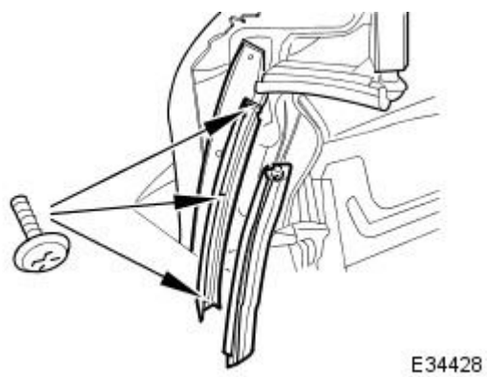

17. Release and remove RH main column seal from carrier.

18. Slacken and remove screws securing RH main column seal carrier and remove carrier.

19. Remove latch striker and guide pins.

- Slacken and remove latch striker securing screws and remove striker from header plate.
- Slacken and remove screws securing latch plate guide pins to frame and remove guide pins.

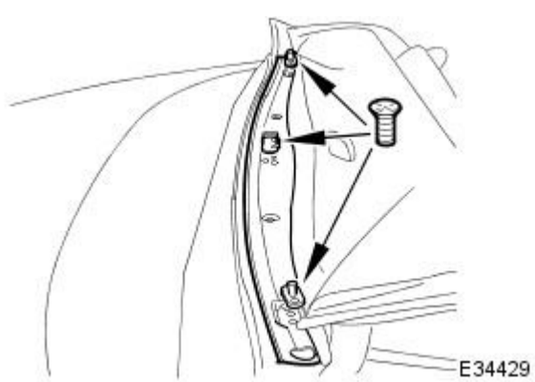

20. Slacken and remove screws securing latch plate to frame and remove latch plate.

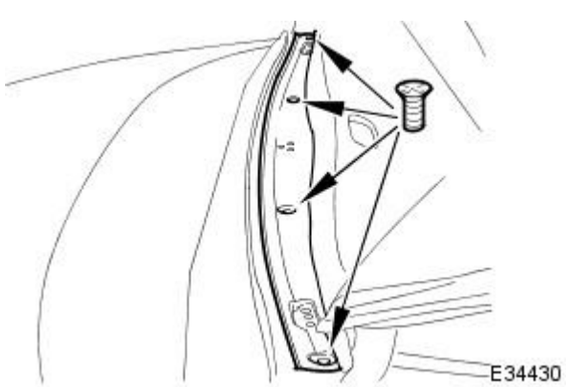

21. Noting positions for installation, release bonded sections of cover from frame.

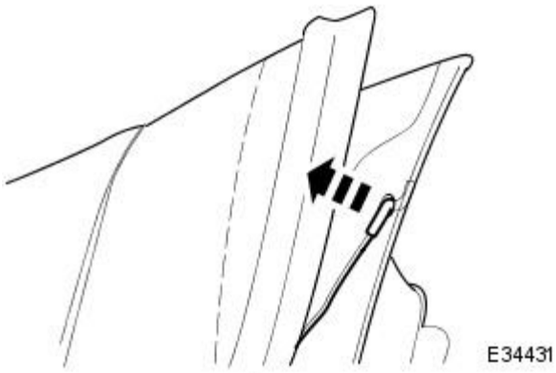

22. Disconnect roof side tension cables from frame.

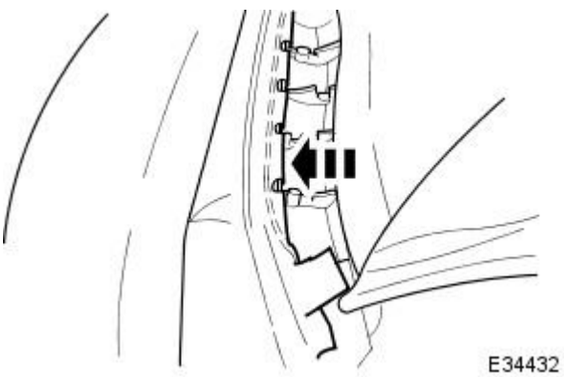

23. Release cover front retaining rod from retaining clips in frame and remove rod from cover.

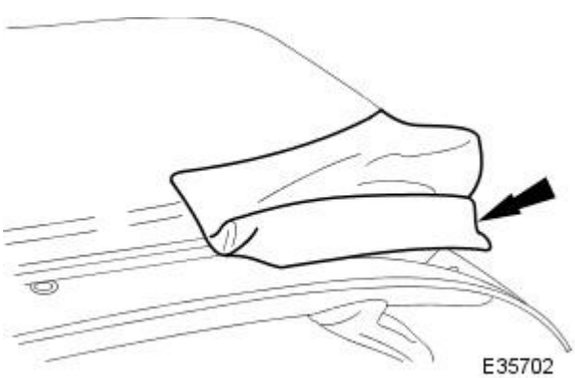

24. Noting the positions for installation, release bonded areas of padding bag from frame and withdraw bag from front of frame.

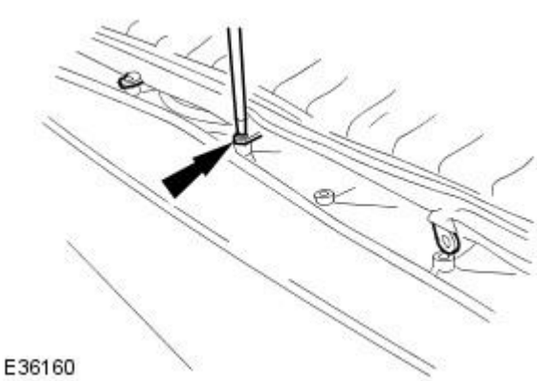

25. Slacken and remove eight screws and outer clips securing padding bag to frame.

26. Manually move top to fully raised position.

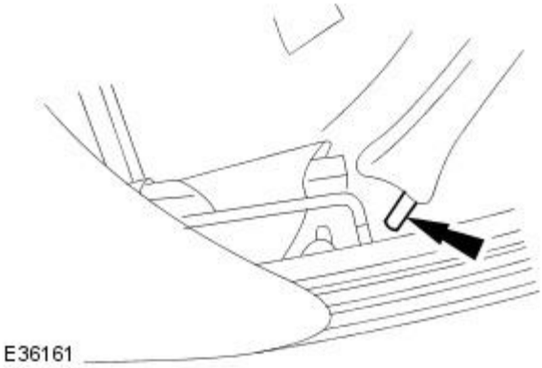

27. Position top cover and padding bag rearwards and release both headlining rear tension rods.

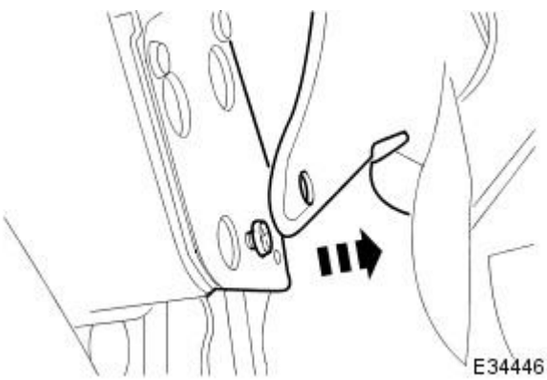

28. Slacken and remove screws securing headlining to main column bracket covers.

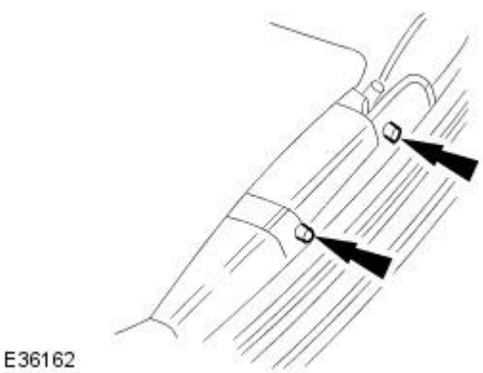

29. Drill out the two rivets each side, securing rear of headlining.

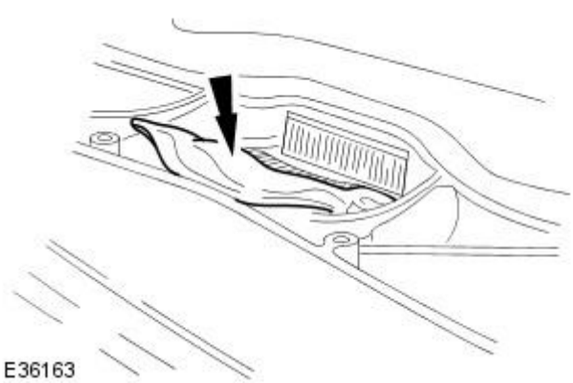

30. Release section of headlining secured by velcro strips to frame around pull-down handle aperture (bonded on early vehicles).

31. Exercising care to avoid damaging cords, drill out the two pop rivets securing tension cords to frame.

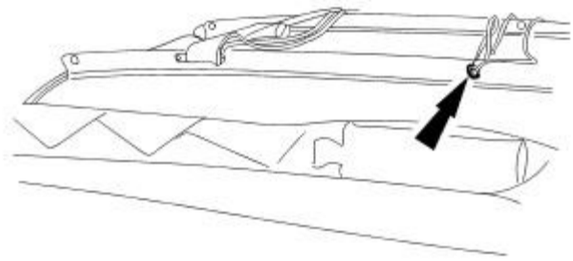

E36164

32. Position tension cords for access.

33. Drill out the seven pop rivets securing front bow rail to top frame and remove rail.

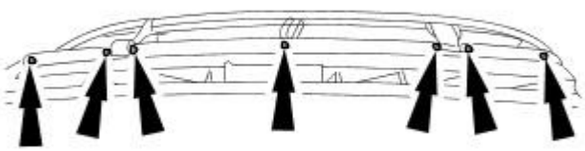

E36165

34. Withdraw the front bow rail from the headlining piping, tension cords and straps.

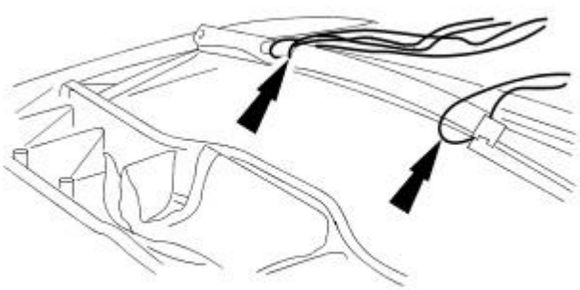

E36166

35. Position tension cords for access.

36. Drill out pop rivets securing centre bow rail to top frame and remove rail from headlining piping.

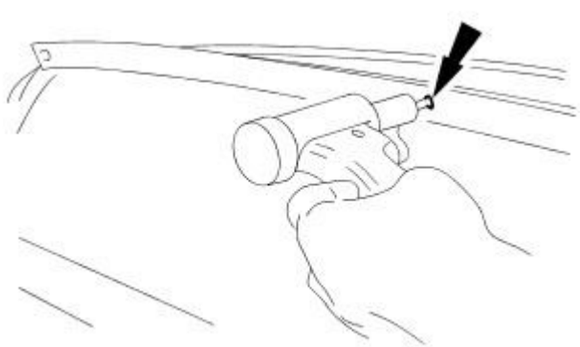

E36167

37. Withdraw headlining rear edge flange from retaining slot in rear bow rail and position rear tension cables for disconnection.

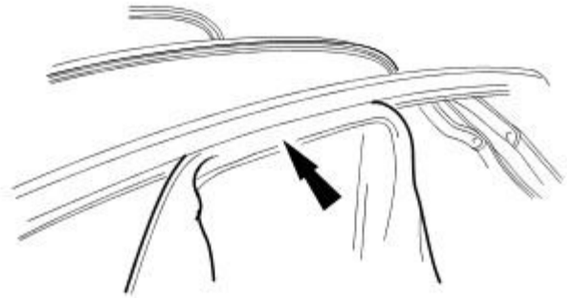

E36168

38. Release and remove tension cable retaining bushes, and disconnect cables from frame.

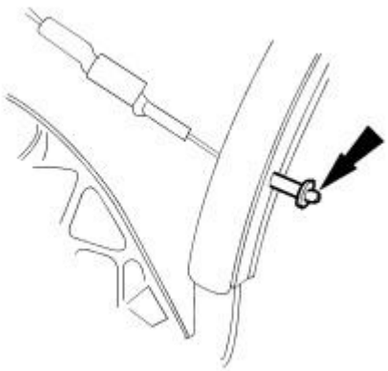

E36169

39. Release headlining fir tree or press stud fasteners from cantrails. Refer to Note in Step 42.

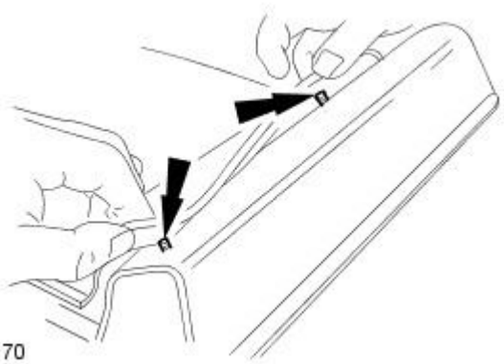

E36170

40. Release front of headlining from double-sided tape on frame.

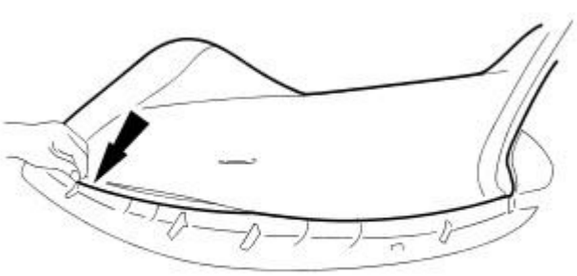

E36171

41. Release the side tension cords and rear tension cables and remove headlining from vehicle.

42. NOTE: On certain early model year vehicles, press-stud fixings securing the the headlining to the frame must be removed and replaced by fir-tree fixings. The procedure for this modification is detailed in Technical Bulletin Number 501-14.

Clean rivet swarf from convertible top area and remove double-sided tape from front of frame.

Installation

1. Place headlining in vehicle, positioning and seating rear of lining in rear bow rail slot.

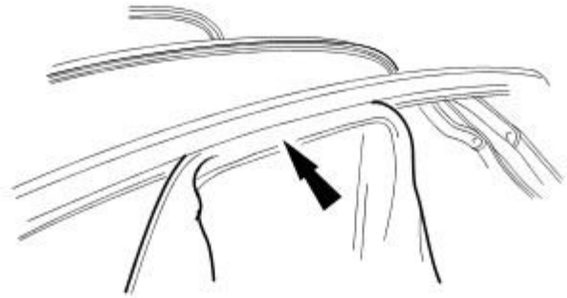

E36168

2. Move padding bag forward for access and check that lining is fully seated on rear bow rail.
3. Route rear tension cables through the headlining piping.

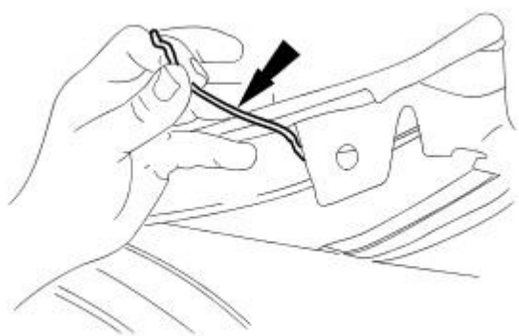

E36172

4. Connect rear tension cables onto frame and fit and fully seat retaining bushes.

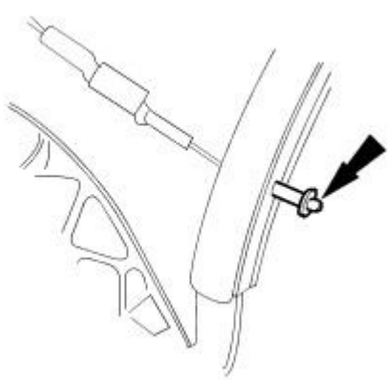

E36169

5. Move padding bag rearward for access.
6. To prevent damage to headlining during fitting, apply protective tape to leading end of centre bow rail.
7. Ensuring correct orientation, feed centre bow rail into the headlining.

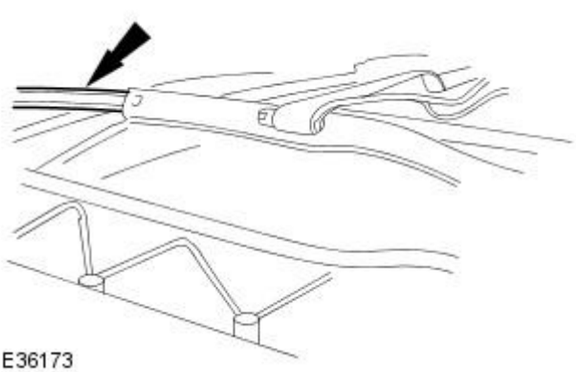

E36173

8. Manually lower top to halfway position.

9. Align bow rail to frame and secure with pop rivets.

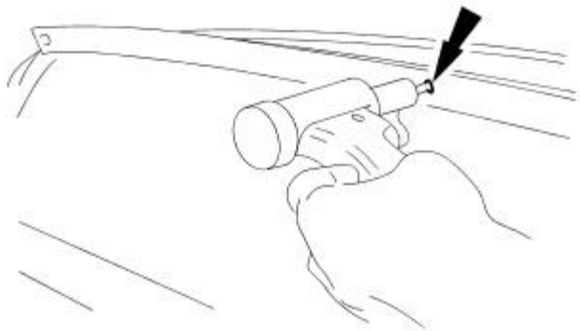

E36167

10. To prevent damage to headlining during fitting, apply protective tape to leading end of front bow rail.

11. Fit tension cords and straps to front bow rail.

- Cut slits in front bow rail piping to accommodate the tension cords and straps.
- Ensuring that tension cords and straps are not twisted, position them in the appropriate slits in the bow rail piping.

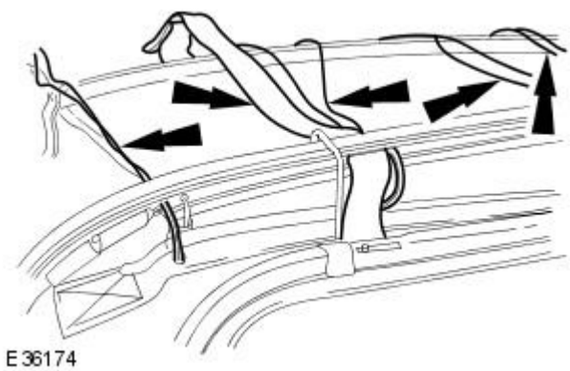

E36174

12. Ensuring correct orientation, feed the front bow rail into the headlining, simultaneously threading tension cords and straps through the piping slits onto the bow rail.

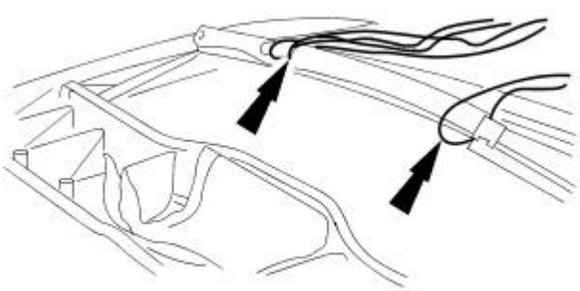

E36166

13. Align front bow rail to frame and secure with pop rivets.

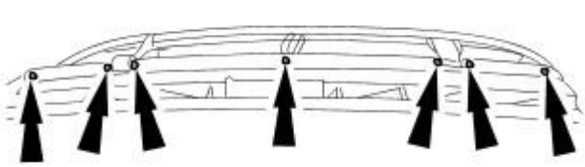

E36165

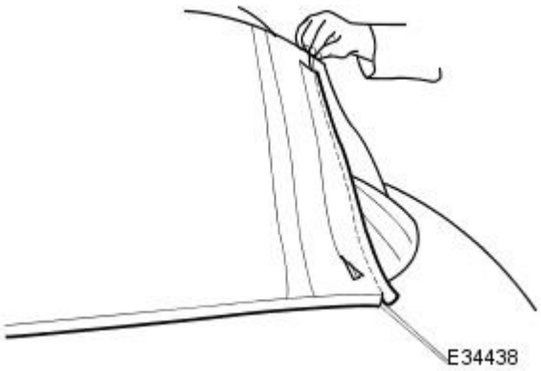

14. Using a piece of welding rod or similar draw wire, pull the outer tension cords through the headlining piping.

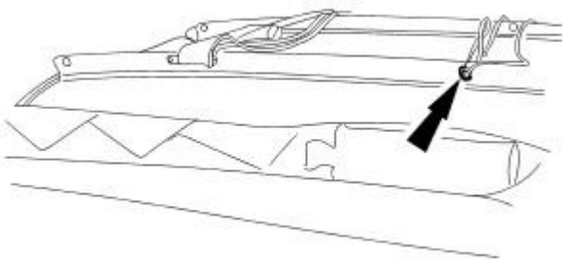

15. Position the outer tension cords to the frame and secure with pop rivets.

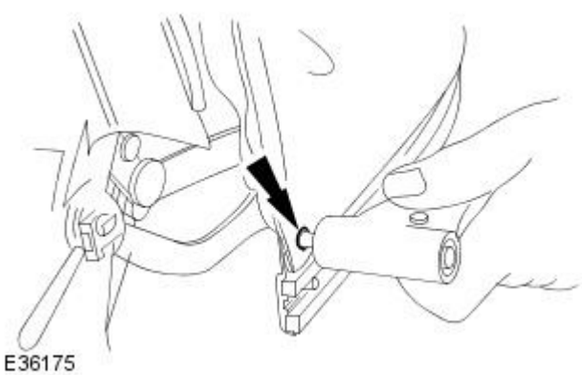

16. Manually move top to fully raised position.

17. Align rear of headlining, pierce it through existing holes at riveting points in the retaining brackets and pop rivet headlining to retaining brackets.

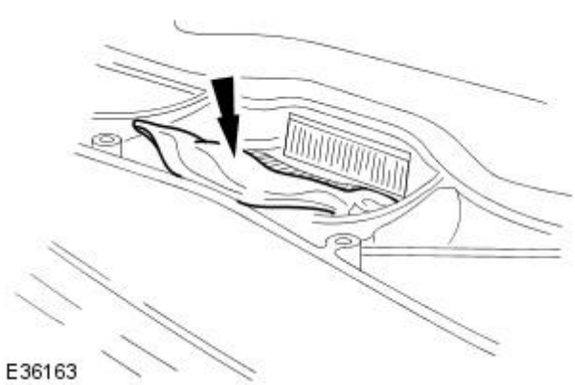

18. Secure headlining at pull-down handle aperture.

- Remove backing from Velcro strips and position and firmly seat at pull-down handle aperture.
- Feed headlining trim material through frame to pull-down handle aperture and secure on Velcro strips.

19. Fit and fully seat new fir tree fasteners securing headlining to frame.

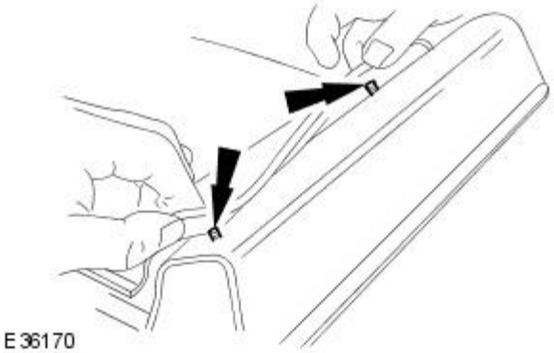

E36170

20. Remove backing from double-sided tape on front of headlining and position and firmly seat lining on frame.

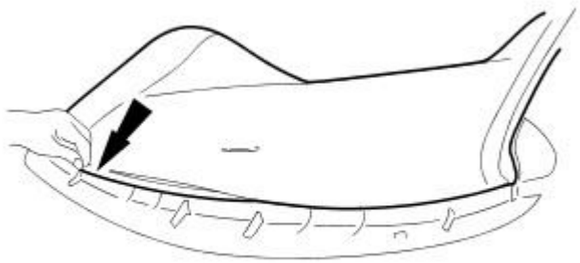

E36171

21. Align padding bag to frame and secure with 'P' clips and retaining screws.

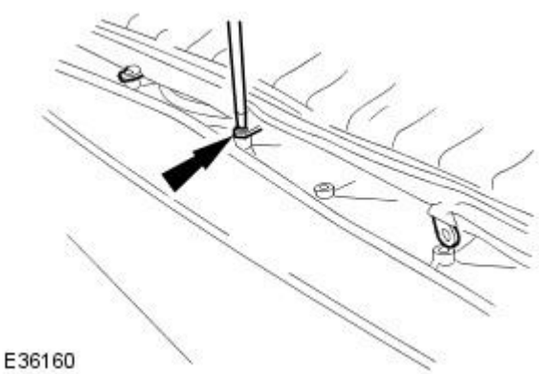

E36160

22. Apply adhesive to front edge of padding bag and position and fully seat on frame.

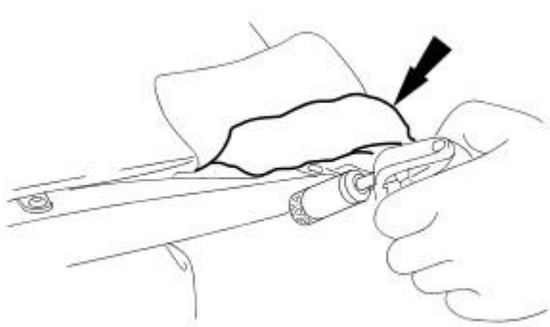

E36176

23. Manually move top to half down position.

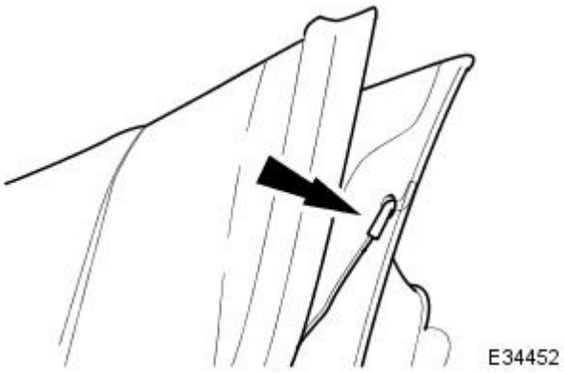

24. Using a piece of welding rod or similar draw wire, pull side tension cables through outer cover and secure them to frame.

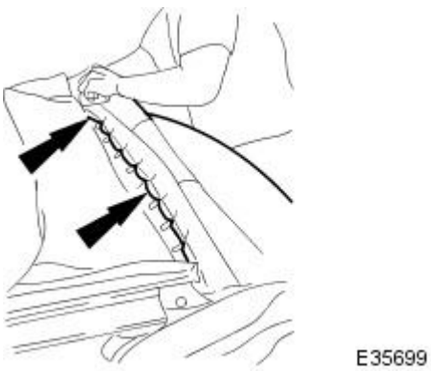

25. Apply adhesive to adjacent front positions of cover and frame and fully seat cover on frame.

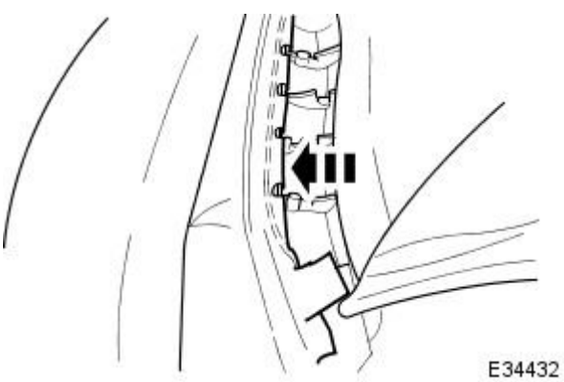

26. Fit front retaining rod to cover and seat rod in securing clips.

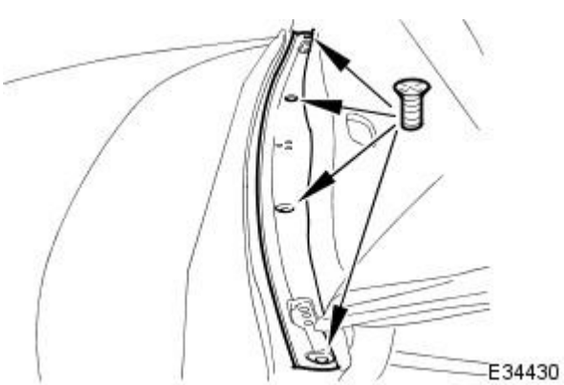

27. Position latch plate and fit and tighten securing screws.

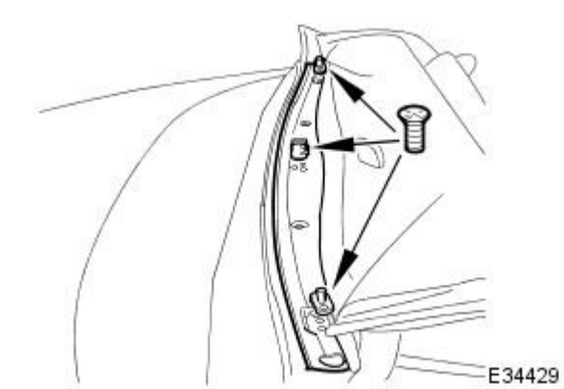

28. Position guide pins and latch striker and fit and tighten securing screws.

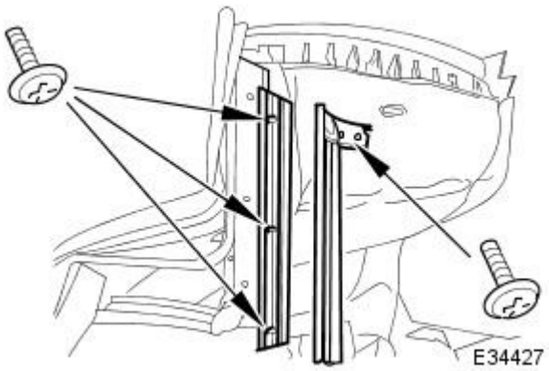

29. Fit cantrail seal carriers.

- Position cantrail seal carriers and fit but do not securing screws.
- Ensuring that seal carriers are positioned towards outboard end of elongated holes, tighten securing screws.

30. Fit and fully seat cantrail seals in carriers and fit and tighten securing screws..

31. Connect ground cable to battery terminal. Refer to 86.15.15.

32. Turn hydraulic pump valve fully clockwise to power operation position and return trunk RH liner to correct position.

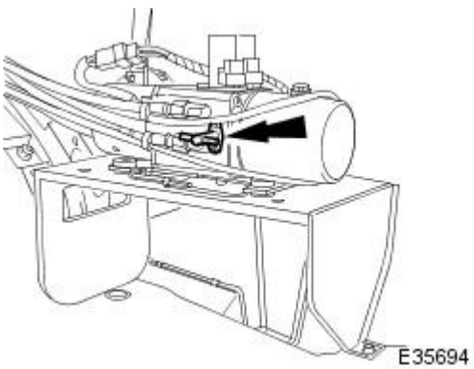

33. Ensuring that rear quarter lights are fully lowered, power top to fully up and latched position.

34. Apply adhesive to adjacent areas of cover and frame at main column and fully seat cover on frame.

35. Power top to half down position.

36. Fit main column seal carriers.

- Position main column seal carriers and fit but do not tighten securing screws.
- Ensuring that carriers are positioned towards outboard end of elongated holes, tighten securing screws.

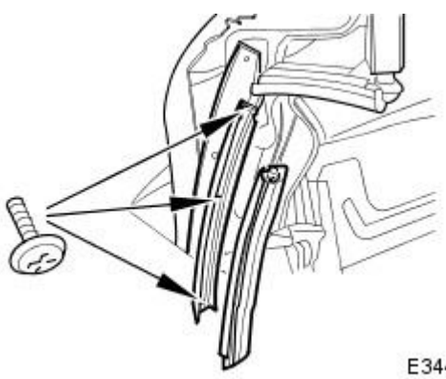

37. Fit and fully seat main column seals in carriers.

38. Power top to fully up and latched position.

39. Position headlining and fit and fully seat rear securing rods.

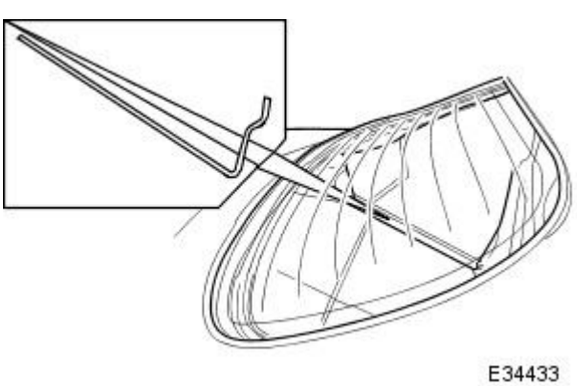

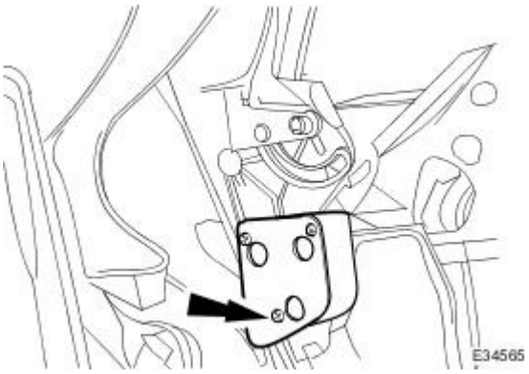

40. Position headlining over cover plates and fit and tighten securing screws.

41. Remove protective tape from BIW.

42. Power top from fully down to fully up positions, checking for satisfactory operation and ensuring that cover is correctly tensioned and free from rippling.

43. Position squab panel stiffener bracket and fit and tighten securing nuts.

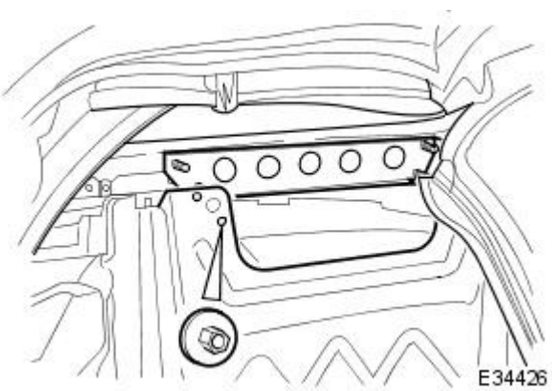

44. Fit carpet to convertible top stowage compartment.

45. Fit rear speaker assemblies. Refer to 86.51.06.

46. Fit rear quarter trim panels. Refer to 76.13.73.

47. Fit rear quarter panel cappings. Refer to 76.13.73.

48. Fit rear seat squab. Refer to 76.70.38.

49. Fit rear seat cushion. Refer to 76.70.37.

50. Connect backlight heater harness multiplugs.

51. Fit battery cover.

Convertible Top - Convertible Top Hydraulic Lift Cylinder

Removal and Installation

Removal

1. Power convertible top to fully lowered position.
2. Power adjacent front seat to fully forward position.
3. Remove battery cover and disconnect ground cable from battery terminal. Refer to 86.15.19.
4. Remove rear seat cushion. Refer to 76.70.37.
5. Remove rear seat squab. Refer ti 76.70.38.
6. Remove rear quarter casing cappings. Refer to 76.13.73.
7. Remove rear quarter casings. Refer to 76.13.73.
8. Remove rear speaker (premium ICE only). Refer to 86.51.06.
9. Position trunk RH liner for access and turn hydraulic pump valve fully counter-clockwise to manual operation position.

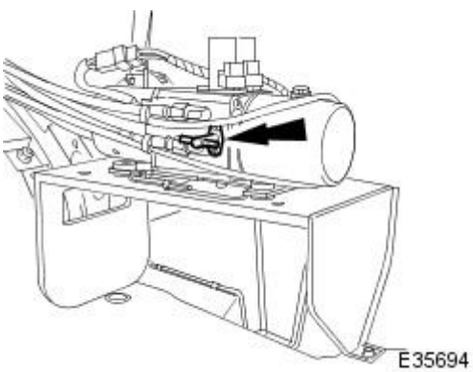

10. Manually move convertible top to fully raised position.
11. Remove clip/pin assembly securing hydraulic cylinder to frame linkage.

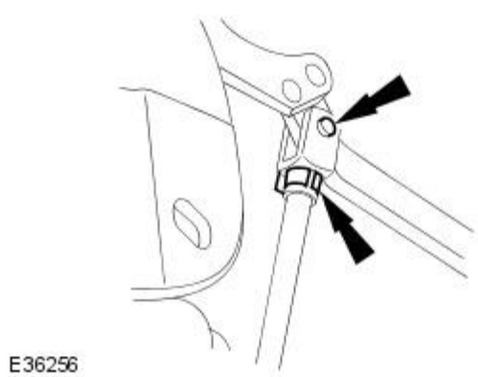

12. Disconnect hydraulic cylinder harness multiplug (RH hydraulic cylinder only).

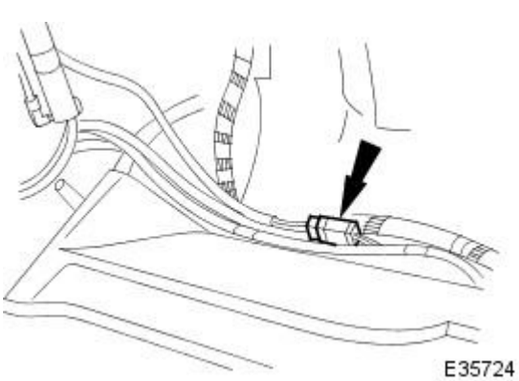

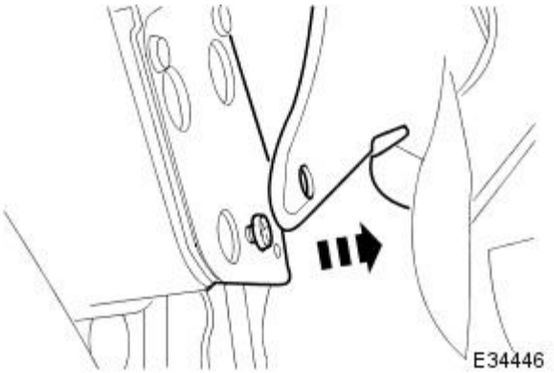

13. Free headlining rear quarter for access.
    - Slacken and remove mounting bracket cover plate lower securing screw, position headlining for access and remove two remaining screws.

E34457

14. Move hydraulic cylinder clear of half pivot and remove and retain wavy washer from pivot.
15. Position a piece of absorbent cloth below hydraulic cylinder to protect paintwork from any fluid spillage.
16. Identify and mark position of hoses relative to hydraulic cylinder connectors, disconnect hoses and remove and discard 'O' ring seals.

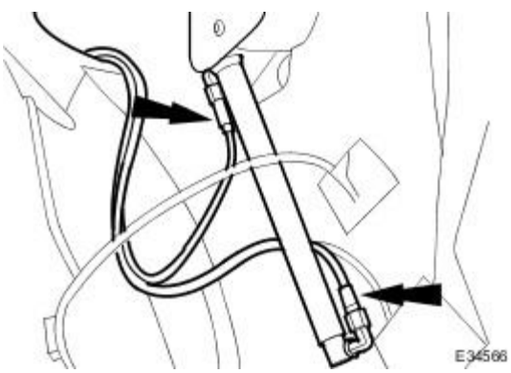

17. Fit blanking plugs to hydraulic cylinder and hose connectors.
18. Remove hydraulic cylinder from vehicle.

Installation

1. Remove blanking plugs from hose and pump connectors.
2. Install new 'O' ring seals in hose connectors.
3. Position hydraulic cylinder in vehicle and ensuring correct orientation as marked during removal, fit and tighten hose connectors to cylinder.
4. Fit wavy washer to mounting bracket pivot and install and fully seat hydraulic cylinder on pivot.

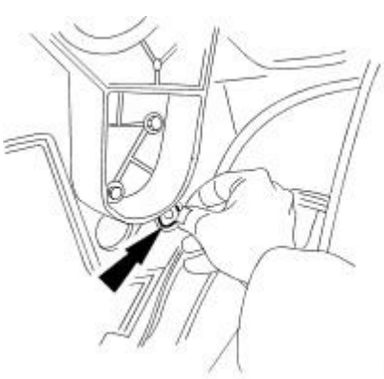

5. Fit mounting bracket cover plate, ensuring that inner half pivot locates in cylinder recess and fit and tighten upper securing screws.

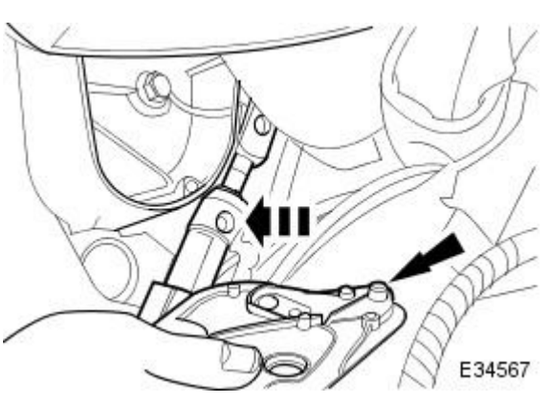

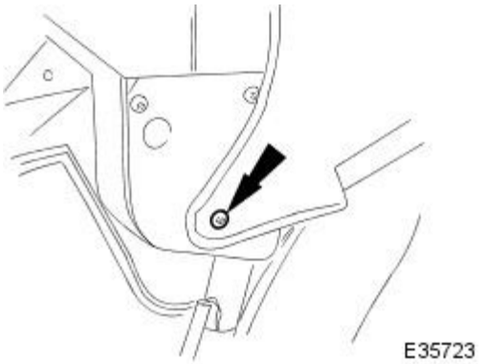

6. Position headlining rear quarters over mounting bracket cover plates and fit and tighten lower securing screws.

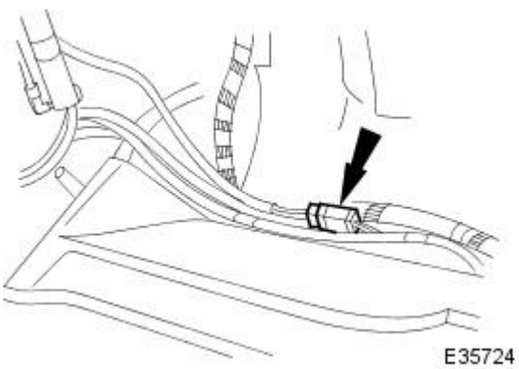

7. Connect hydraulic cylinder harness multiplug (RH hydraulic cylinder only).

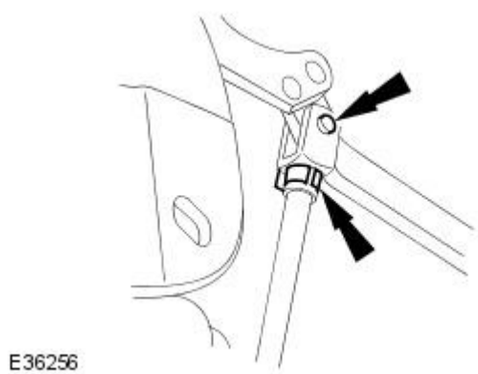

8. Fit hydraulic cylinder to frame.

- Align and extend cylinder actuating rod to convertible top frame location.
- Fit and fully seat clip/pin assembly to secure cylinder rod end on frame.

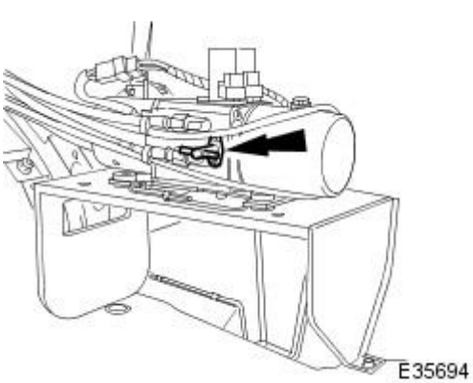

9. Manually move convertible top to fully lowered position.

10. Turn hydraulic pump valve fully clockwise to power operation position.

11. Connect ground cable to battery terminal. Refer to 86.15.15.

12. Check hydraulic system for satisfactory operation and freedom from leaks.

1. Power top to fully raise position.
2. Power top to fully lowered position.
3. Power top to fully raised position.
4. Check all connections for leakage.

13. Remove protective cloth positioned below ram.

14. Remove trunk floor carpet.

15. Remove trunk front liner. Refer to 76.19.31.

16. Remove trunk rear finisher. Refer to 76.19.44.

17. Remove trunk RH liner.

18. Position a piece of absorbent cloth on trunk floor to protect paintwork from any fluid spillage.

19. CAUTION: Two fluid levels are marked on the pump reservoir body. The upper mark denotes the fluid level when the top is fully lowered and the lower mark denotes the level when the top is fully raised.

• NOTE: The convertible top hydraulic system is 'self-bleeding' and does not require further action to expel entrapped air.

Slacken and remove reservoir filler plug and remove and discard 'O' ring seal.

20. Check fluid level and top up .as necessary.

21. Fit new 'O' ring seal to filler plug.

22. Fit and fully tighten filler plug on reservoir.

23. Remove protective cloth from trunk floor.

24. Fit RH liner to trunk.

25. Fit trunk rear finisher. Refer to 76.19.44.

26. Fit trunk front liner. Refer to 76.19.31.

27. Fit trunk floor carpet.

28. Fit battery cover.

29. Fit rear speaker assemblies. Refer to 86.51.06.

30. Fit rear quarter casings. Refer to 76.13.73.

31. Fit rear quarter casing cappings.

32. Fit rear seat squab. Refer to 76.70.38.

33. Fit rear seat cushion. Refer to 76.70.37.

34. Power adjacent front seat to original position.

Convertible Top - Convertible Top Hydraulic Lift Cylinder Hoses

Removal and Installation

Removal

1. Power convertible top to fully lowered position.
2. Power adjacent seat to fully forward position.
3. Remove battery cover and disconnect ground cable from battery terminal. Refer to 86.15.19.
4. Remove trunk floor carpet.
5. Remove trunk front liner. Refer to 76.19.31.
6. Remove trunk rear finisher. Refer to 76.19.44.
7. Remove trunk RH liner.
8. Position a piece of absorbent cloth on trunk floor to protect paintwork from any fluid spillage.
9. Turn hydraulic pump valve fully counter-clockwise to manual operation position.

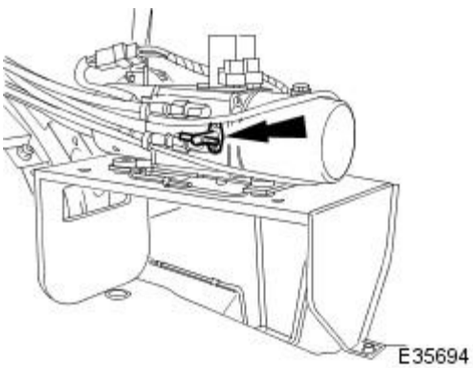

10. Remove rear seat cushion. Refer to 76.70.37.
11. Remove rear seat squab. Refer to 76.70.38.
12. Remove rear quarter casing cappings. Refer to 76.13.73.
13. Remove rear quarter casings. Refer to 76.13.73.
14. Remove rear speaker (premium ICE only). Refer to 86.51.06.
15. Manually move top to fully raised position.
16. Position a piece of absorbent cloth below hydraulic cylinder to protect paintwork from any fluid spillage.
17. Disconnect hoses from hydraulic cylinder.
    - Identify and mark position of hoses relative to hydraulic cylinder connectors.
    - Slacken and remove hoses from hydraulic cylinder and fit blanking plugs to cylinder and hose connectors.

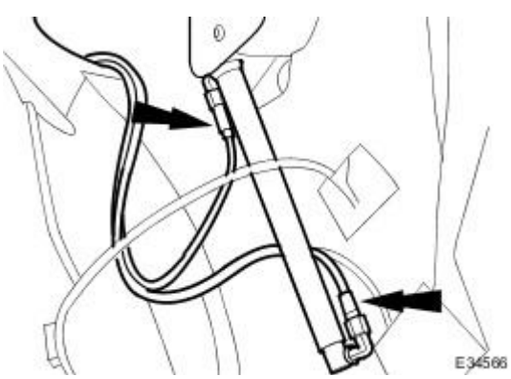

18. Remove carpet from convertible top stowage compartment.
19. Route free end of each hose under headlining and rear harnesses and around seat squab support panel to RH side of vehicle (LH hydraulic cylinder hoses only).

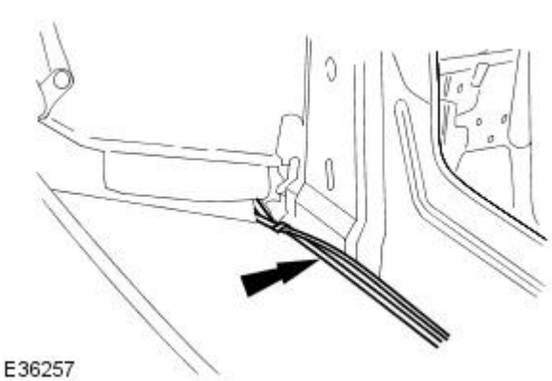

20. Sever, remove and discard tie straps securing hoses and rear harness to BIW.

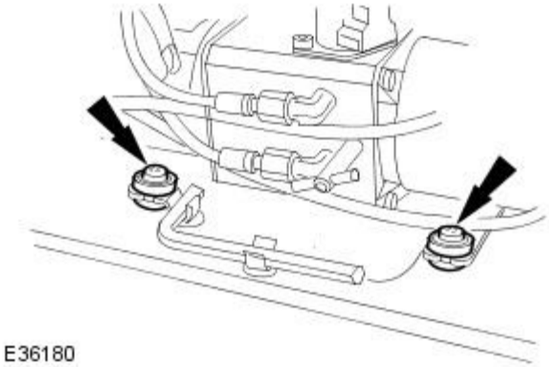

E36180

21. Slacken and remove the two pump assembly securing bolts, release pump from outboard grommet locations and position for access to outboard hoses.

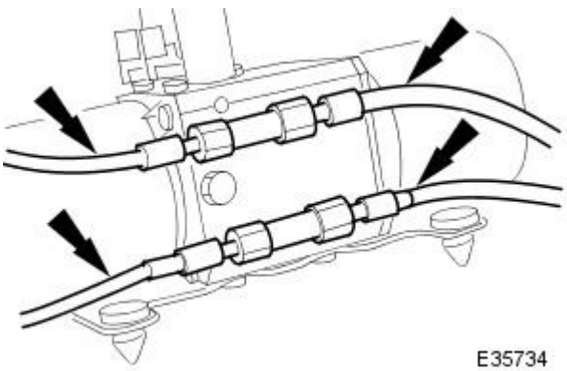

E35734

22. Identify and mark pump outboard hose connections.

1. LH cylinder: Pump rear connectors - hydraulic cylinder bottom hose to lower connector.

• NOTE: Pump inboard connectors are for latch operating hoses only.

2. RH cylinder: Pump front connectors - hydraulic cylinder top hose to lower connector.

23. Disconnect appropriate hoses from pump, remove and discard 'O' ring seals and fit blanking plugs to hoses and pump connectors.

24. Carefully withdraw hoses through BIW aperture into vehicle interior and remove hoses from vehicle.

E36258

Installation

1. Place hydraulic hoses in convertible top stowage compartment.

2. LH hydraulic cylinder only: Route pump connecting ends of hoses across top stowage compartment to RH side of vehicle.

3. Pass pump connecting ends of hoses through BIW RH aperture and into trunk.

E36258

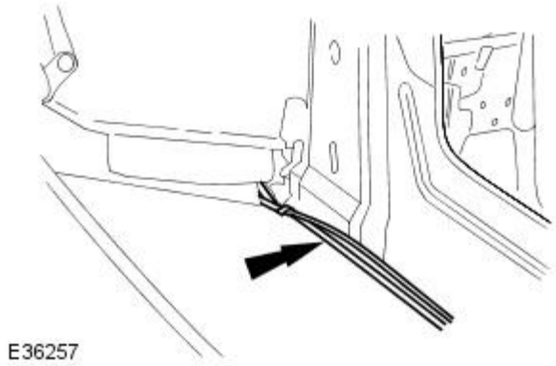

4. LH cylinder only: Route hydraulic cylinder end of hoses around LH end of seat squab support panel and under rear harnesses and headlining to cylinder location.

5. Remove blanking plugs from hydraulic cylinder and corresponding hose connectors, fit new 'O' ring seals to hose connectors.

6. Noting identifying marks applied during removal, connect and tighten hoses onto cylinder.

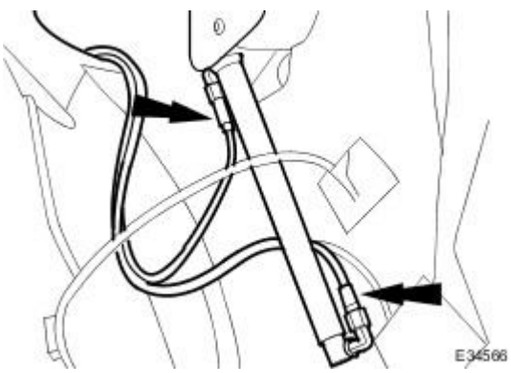

7. Remove blanking plugs from hydraulic pump and corresponding hose connectors and fit new 'O' ring seals to hose connectors.

8. Connect and tighten hoses on pump outboard connectors ensuring corrct orientation as follows:

1. LH cylinder: Pump rear connectors - cylinder bottom hose to lower connector.

• NOTE: Pump inboard connectors are for latch operating hoses only.

2. RH cylinder: Pump front connectors - cylinder top hose to lower connector.

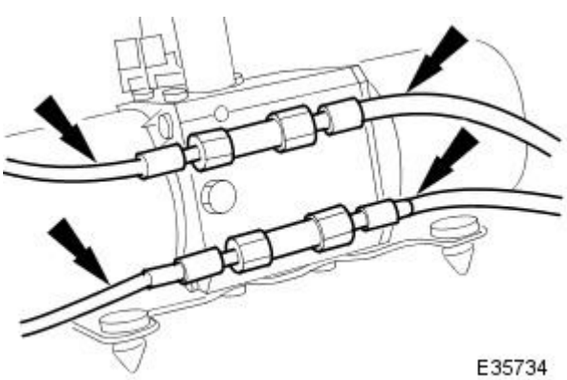

9. Fit new tie straps to BIW, position harness and hoses in straps and tighten straps to secure.

10. Fit carpet to convertible top stowage compartment.

11. Position pump on platform and fully seat rubber mounting grommets.

12. Fit and tighten pump securing bolts.

13. Manually move convertible top to fully lowered position.

14. Turn hydraulic pump valve fully clockwise to power operation position.

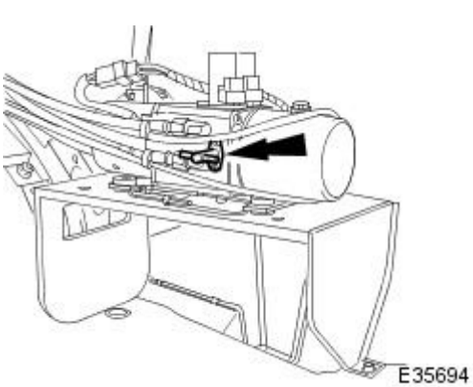

15. Connect ground cable to battery terminal. Refer to 86.15.15.

16. Check hydraulic system for satisfactory operation and all connections for freedom from leaks.

1. Power top to fully raise position.

2. Power top to fully lowered position.

3. Power top to fully raised position.

4. Check hose connections for leakage.

17. CAUTION: Two fluid levels are marked on the pump reservoir body. The upper mark denotes the fluid level when the top is fully lowered and the lower mark denotes the level when the top is fully raised.

• NOTE: The convertible top hydraulic system is 'self-bleeding' and does not require further action to expel entrapped air.

Slacken and remove reservoir filler plug and remove and discard 'O' ring seal.

18. Check fluid level and top up .as necessary.

19. Fit new 'O' ring seal to filler plug.

20. Fit and fully tighten filler plug on reservoir.

21. Remove protective cloth from trunk floor.

22. Fit RH liner to trunk.

23. Fit trunk rear finisher. Refer to 76.19.44.

24. Fit trunk front liner. Refer to 76.19.31.

25. Fit trunk floor carpet.

26. Fit battery cover.

27. Fit rear speaker assemblies. Refer to 86.51.06.

28. Fit rear quarter casings. Refer to 76.13.73.

29. Fit rear quarter casing cappings.

30. Fit rear seat squab. Refer to 76.70.38.

31. Fit rear seat cushion. Refer to 76.70.37.

32. Power adjacent front seat to original position.

Convertible Top - Convertible Top Hydraulic Pump

Removal and Installation

Removal

1. Power convertible top to fully lowered position.
2. Remove battery cover and disconnect ground cable from battery terminal. Refer to 86.15.19.
3. Remove trunk floor carpet.
4. Remove trunk front liner. Refer to 76.19.31.
5. Remove trunk rear finisher. Refer to 76.19.44.
6. Remove trunk RH liner.
7. Sever and remove tie strap securing pump harness multiplug to pump hose and disconnect multiplug from pump motor.

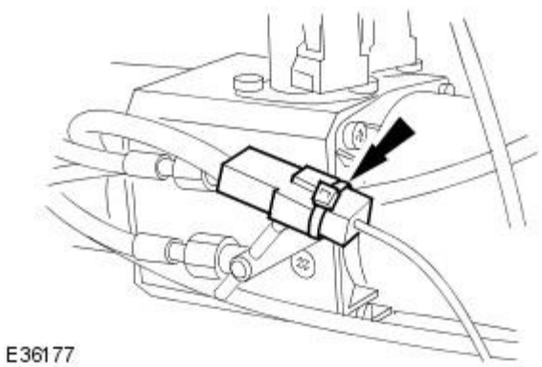

E36177

8. Disconnect harness multiplugs from raise and lower solenoid control valves.

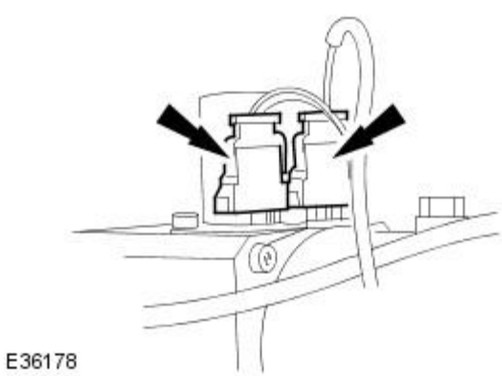

E36178

9. Position a piece of absorbent cloth on trunk floor to protect paintwork from any fluid spillage.
10. Identify and mark position of inboard hoses relative to pump, disconnect hoses, remove and discard 'O' ring seals and fit blanks to pump and hose connectors.

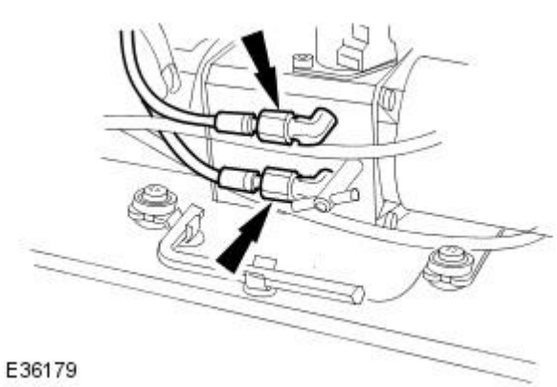

E36179

11. Slacken and remove the two pump assembly securing bolts.

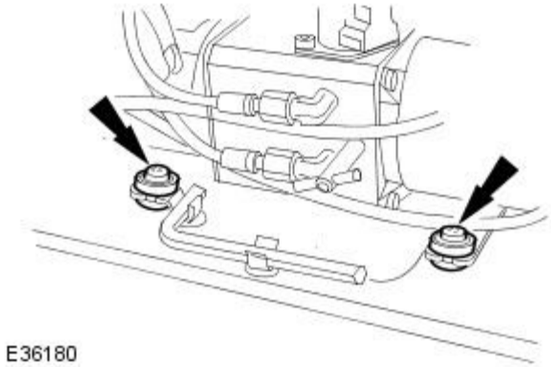

E36180

12. Remove pump from mounting.

- Release pump from outboard grommet locations and position pump for access to outboard hoses.
- Identify and mark position of outboard hoses relative to pump, disconnect hoses, remove and discard 'O' ring seals and fit blanks to hose and pump connectors.

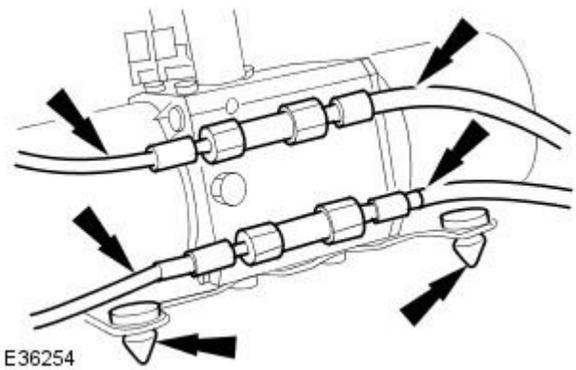

E36254

13. Remove pump from trunk.

14. If pump is to be renewed:

1. Remove and retain mounting rubbers from pump.
2. Remove connector blanks.
3. Slacken and remove pump reservoir filler ,plug
4. Invert pump over a suitable receptacle and allow fluid to completely drain.
5. Fit and tighten reservoir filler plug and connector blanks.

Installation

1. Ensure that convertible top is in fully lowered position.

2. CAUTION: Two fluid levels are marked on the pump reservoir body. The upper mark denotes the fluid level when the top is fully lowered and the lower mark denotes the level when the top is fully raised.

Slacken and remove the filler plug, fill the reservoir with correct fluid to the upper mark on the reservoir body and fit and tighten filler plug.

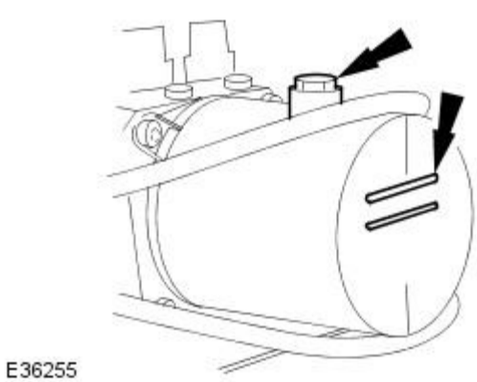

E36255

3. Fit and fully seat rubber mounting grommets to base of pump assembly.

4. Remove blanks from pump outboard connectors.

5. Remove blanks and fit new 'O' ring seals to outboard hoses.

6. Position pump on trunk platform for access to outboard connectors.

7. Noting positional marks made during removal, connect and fully tighten outboard hoses on pump.

8. Position pump on platform and fully seat mounting grommets.

9. Fit and tighten pump securing bolts.

10. Remove blanks from inboard connectors and associated hoses.

11. Fit new 'O' ring seals to inboard hoses and noting positional marks, connect and fully tighten hoses on pump connectors

12. Position pump harness correctly and connect multiplugs to solenoid

control valves.

13. Connect harness multiplug to pump motor.

14. Secure pump motor harness to hoses using new tie strap.

15. Connect ground cable to battery terminal. Refer to 86.15.15.

16. Check hydraulic system for satisfactory operation and freedom from leaks:

1. Power top to fully raised position.
2. Power top to fully lowered position.
3. Power top to fully raised position.

17. CAUTION: Two fluid levels are marked on the pump reservoir body. The upper mark denotes the fluid level when the top is fully lowered and the lower mark denotes the level when the top is fully raised.

• NOTE: The convertible top hydraulic system is 'self-bleeding' and does not require further action to expel entrapped air.

Slacken and remove pump reservoir filler plug.

18. Check fluid level and top up as necessary to lower mark on reservoir.

19. Fit and tighten reservoir filler plug.

20. Remove protective cloth from trunk floor.

21. Fit RH liner to trunk.

22. Fit trunk rear finisher. Refer to 76.19.44.

23. Fit trunk front liner. Refer to 76.19.31.

24. Fit trunk floor carpet.

25. Fit battery cover.

Convertible Top - Convertible Top Latch

Removal and Installation

Removal

1. Power convertible top to fully lowered position.
2. Remove battery cover and disconnect ground cable from battery terminal. Refer to 86.15.19.
3. Remove roof console. Refer to 76.13.69.
4. Where fitted, disconnect microphone harness multiplug.

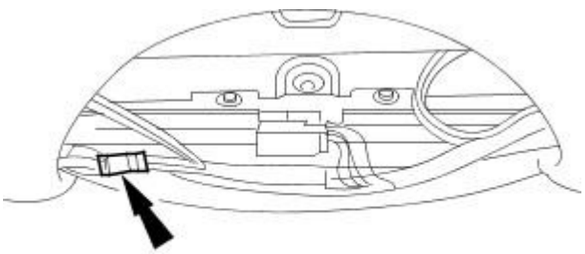

E35717

5. Remove the sun visors. Refer to 76.10.48
6. Remove the sun visor retaining clips. Refer to 76.10.58
7. Remove 'A' post upper trim finishers. Refer to 76.13.31.
8. Carefully remove and discard fir tree fastener retaining trim finisher on header rail and remove finisher from header rail.

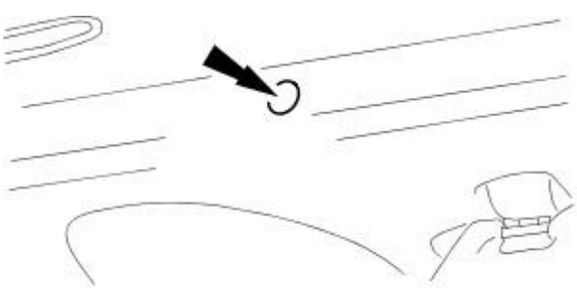

E35725

9. Remove and discard retaining stud from LH end of header seal.

E36259

10. Lift rear edge of seal for access and slacken and remove latch cover LH end securing screw.

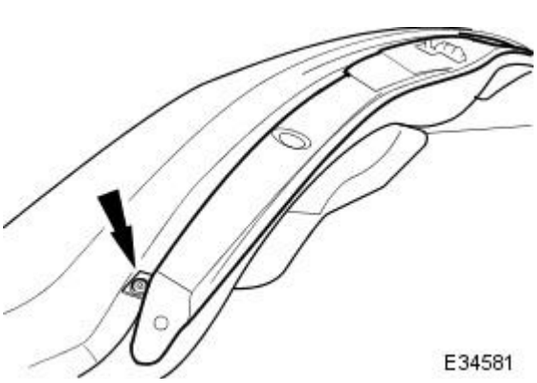

E34581

11. Remove retaining stud from RH end of header seal, lift rear edge of seal for access and slacken and remove latch cover RH end securing screw.

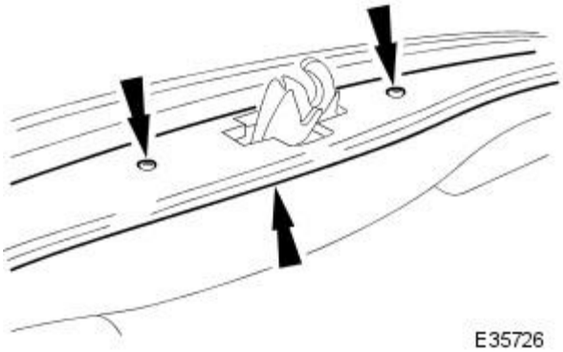

12. Slacken and remove two remaining latch cover securing screws and remove latch cover from header rail.

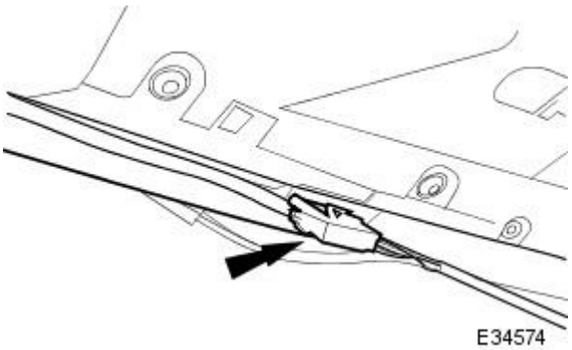

13. Disconnect convertible top harness multiplug.

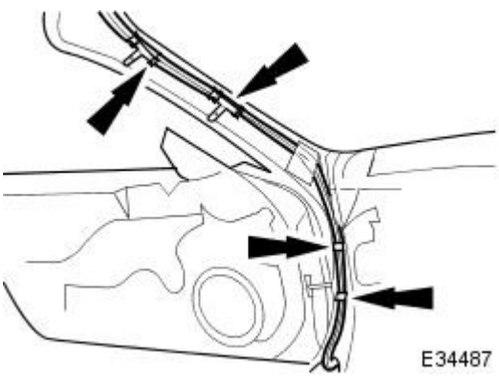

14. Release hydraulic hose retaining clips from LH upper 'A' post.

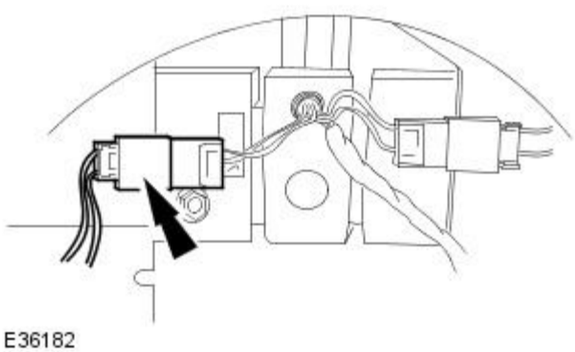

15. Release sun visor harness multiplugs from retainers on latch assembly bracket.

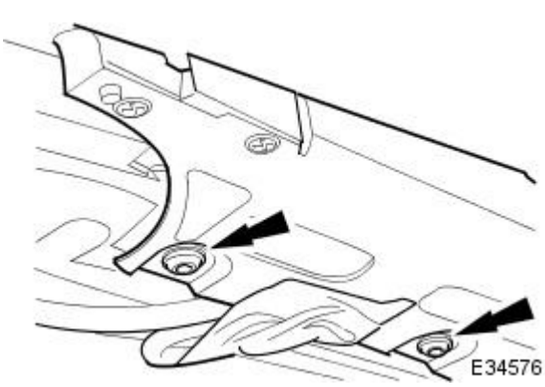

16. Slacken and remove the seven latch assembly to BIW header lower securing screws.

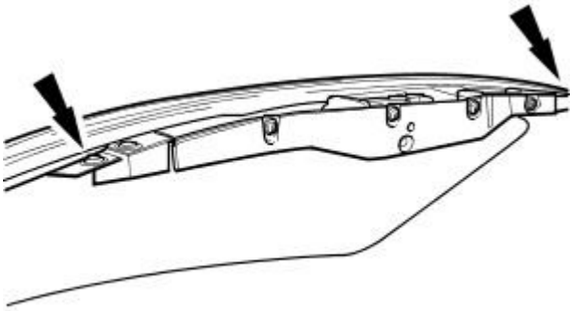

E34575

17. Slacken and remove the latch assembly to BIW header upper securing screws.

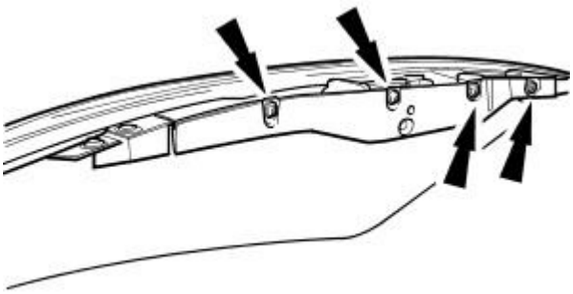

E34577

18. NOTE: When carrying out the following operation, do not disturb securing bolts installed in the open-ended slots.

Slacken and remove the latch assembly to BIW header rear securing screws.

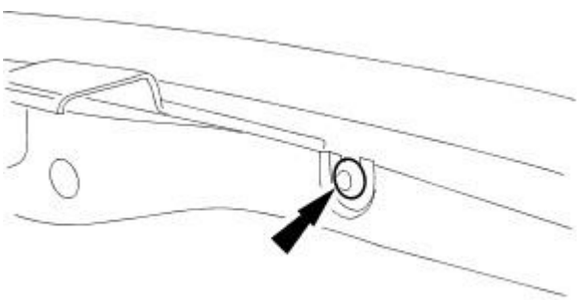

E35727

19. Supporting latch assembly, slacken but do not remove securing bolts installed in the rear inner open-ended slots.

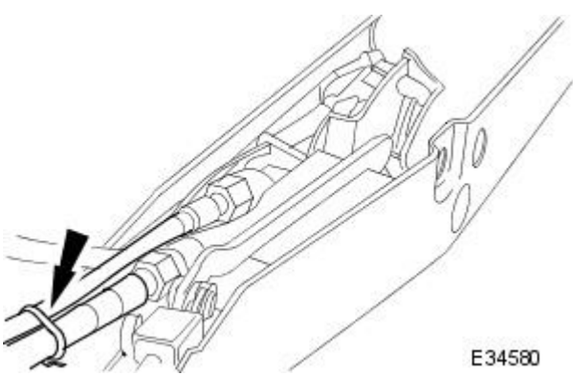

E34580

20. Withdraw latch assembly and sever and remove tie straps securing hydraulic hoses to assembly.

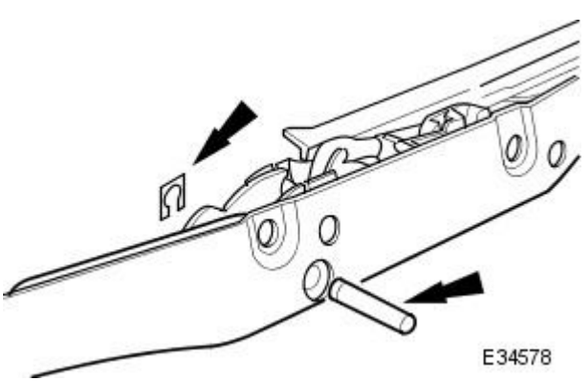

E34578

21. Remove spring clip from latch actuator clevis pin and withdraw pin.

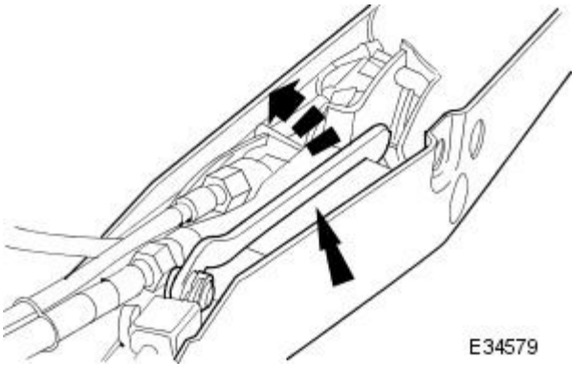

22. Pull retaining lever away from latch hydraulic cylinder.

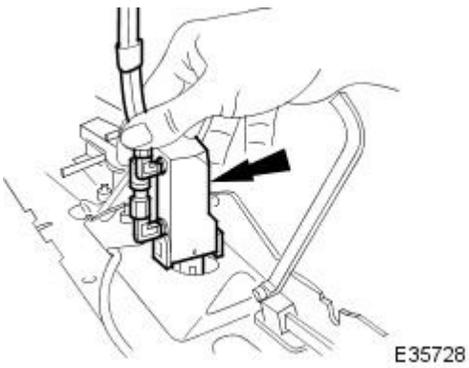

23. Lift hydraulic cylinder to vertical position and separate from latch assembly.

24. Remove latch assembly from vehicle.

Installation

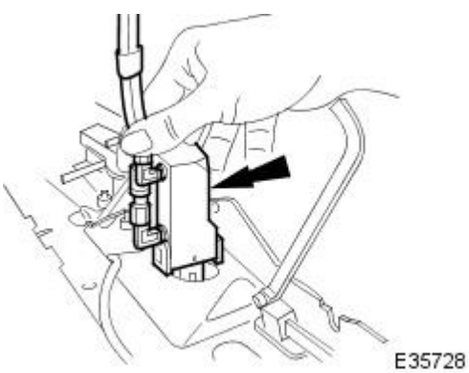

1. Position hydraulic cylinder vertically in latch assembly slots and lower to engage lugs.

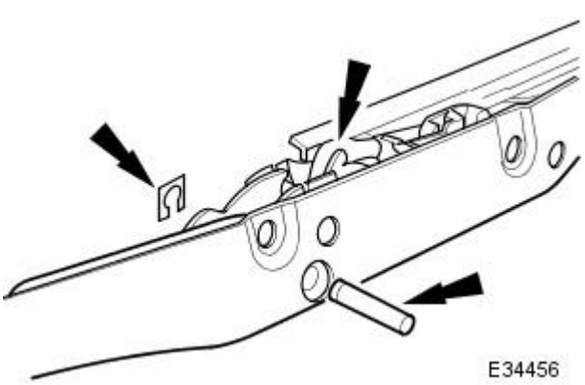

2. Retain hydraulic cylinder in latch assembly.

- Move locking lever across to secure actuator.
- Fit and fully seat clevis pin.
- Fit retaining clip to clevis pin.

3. Using new tie strap, secure hydraulic hoses to latch assembly.

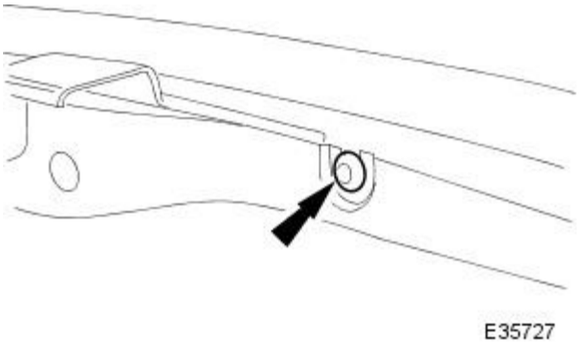

4. Ensuring that hydraulic hoses are not trapped, position open-ended slots in rear face of latch assembly under the undisturbed rear screws.

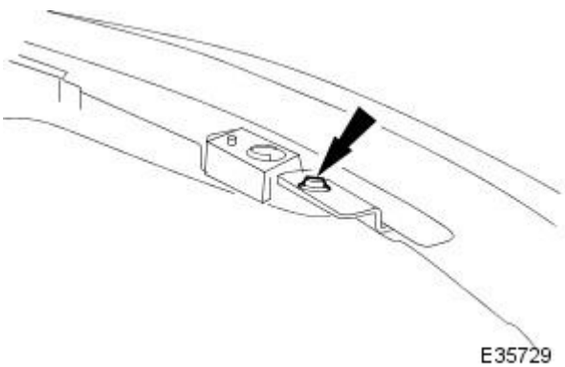

5. Supporting the latch assembly, fit but do not tighten the two top securing screws.

6. Fit but do not tighten the remaining securing screws.

7. Tighten the two top securing screws.

8. Tighten all remaining securing screws.

9. Install sun visor harness multiplugs on latch assembly bracket retainers.

10. Connect latch assembly harness multiplug.

11. Fit and fully seat hydraulic hose retaining clips on upper 'A' post

12. Fit latch assembly cover panel. Refer to 76.86.20.

13. Position trim finisher on header rail and secure with new fir tree fastener, exercising care to avoid damaging finisher.

14. Fit upper 'A' post trim finisher. Refer to 76.13.31.

15. Fit the sun visor retaining clips. Refer to 76.10.58

16. Fit the sun visors. Refer to 76.10.48

17. Where applicable, connect microphone harness multiplug.

18. Fit roof console. Refer to 76.13.69.

19. Connect ground cable to battery terminal and fit battery cover. Refer to 86.15.15.

20. Check hydraulic system for satisfactory operation and all connections for freedom from leaks.

1. Power top to fully raised position.
2. Power top to fully lowered position.
3. Power top to fully raised position.

Convertible Top - Convertible Top Latch Hydraulic Cylinder

Removal and Installation

Removal

1. Remove convertible top latch assembly for access. Refer to 76.86.19.
2. Sever and remove tie straps securing hydraulic hoses to latch assembly.
3. Identify and mark position of hydraulic hoses relative to hydraulic cylinder.
4. To protect the vehicle interior from any fluid spillage, position a plastic sheet immediately below the hydraulic cylinder.
5. Disconnect hydraulic hoses from hydraulic cylinder, remove and discard 'O' ring seals from hose connectors and fit blanking plugs to hydraulic cylinder and hoses.

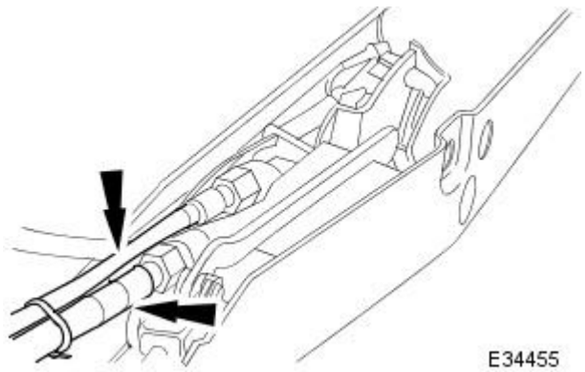

6. Place latch assembly on a clean work surface.
7. Remove spring clip from hydraulic cylinder clevis pin and withdraw pin.

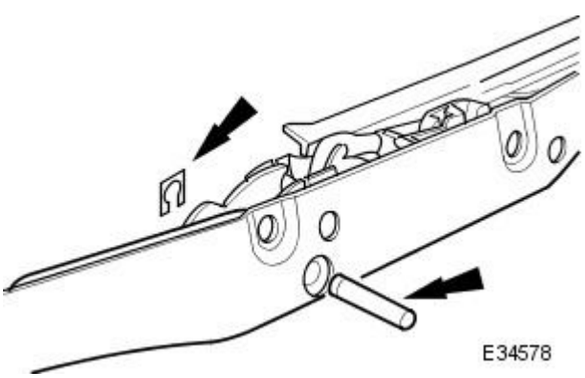

8. Pull retaining lever away from latch hydraulic cylinder.

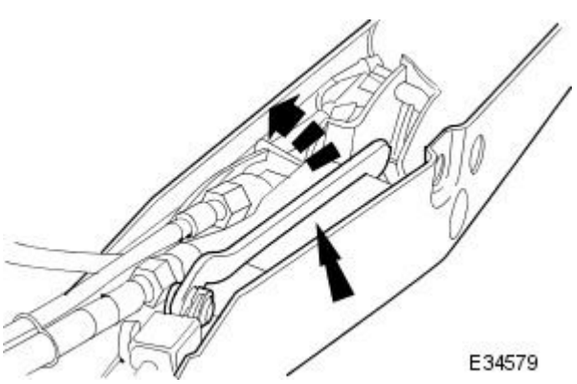

9. Lift hydraulic cylinder to vertical position and separate from latch assembly.

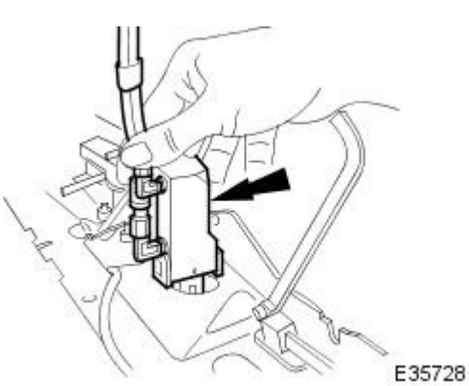

Installation

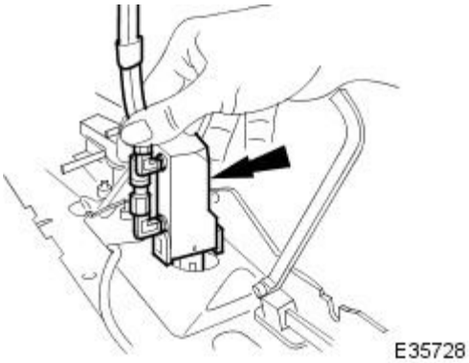

1. Position hydraulic cylinder in latch assembly slots and lower to engage lugs.

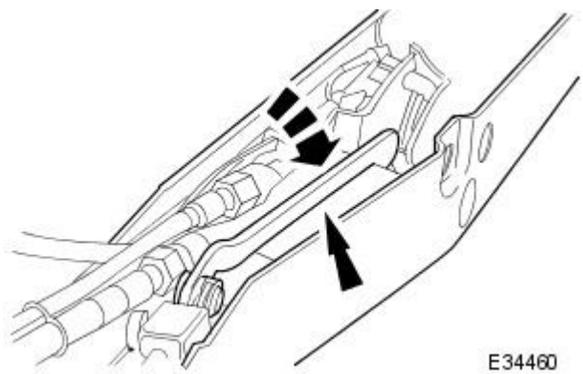

2. Move locking lever across to secure hydraulic cylinder.

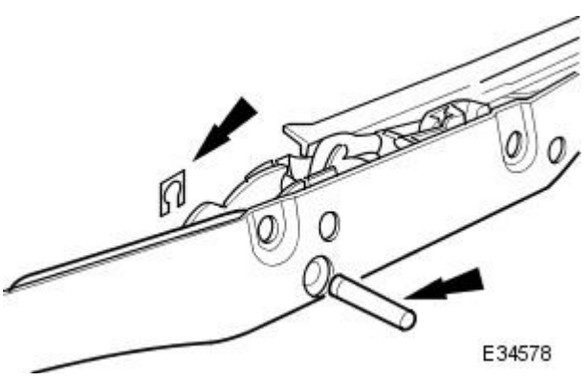

3. Fit and fully seat clevis pin and fit retaining cip.

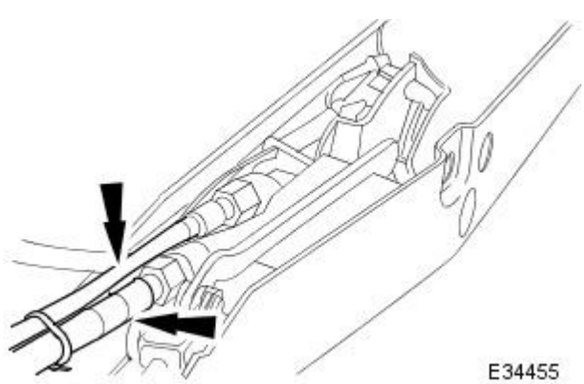

4. Connect hoses to hydraulic cylinder.

- Position latch assembly in vehicle, remove blanking plugs from hoses and cylinder connectors and fit new 'O' ring seals to hose connectors.
- Noting marked positions, fit and tighten hoses to actuator, ensuring that hoses are not twisted or distorted.

5. Remove plastic protective sheet from vehicle interior.

6. Using a new tie strap, secure hydraulic hoses to the latch assembly.

7. Fit latch assembly to BIW header. Refer to 76.86.19.

8. Fit latch assembly cover panel. Refer to 76.86.20.

9. Connect ground cable to battery terminal and fit battery cover. Refer to 86.15.15.

10. Check hydraulic system for satisfactory operation and freedom from leaks.

1. Power top to fully raised position.
2. Power top to fully lowered position.
3. Power top to fully raised position.
4. Check that hose connections are free from leakage.

11. Position trim finisher on header rail and secure with new fir tree

fastener, exercising care to avoid damaging finisher.

12. Fit upper 'A' post trim finisher. Refer to 76.13.31.

13. Fit sun visors and retention bezels. Refer to 76.10.47.

14. Where applicable, connect microphone harness multiplug.

15. Fit roof console. Refer to 76.13.69.

Convertible Top - Convertible Top Latch Hydraulic Cylinder Hoses

Removal and Installation

Removal

1. Power convertible top to fully lowered position.
2. Remove battery cover and disconnect ground cable from battery terminal. Refer to 86.15.19.
3. Remove trunk floor carpet.
4. Remove trunk front liner. Refer to 76.19.31.
5. Remove trunk rear finisher. Refer to 76.19.44.
6. Remove trunk RH liner.
7. Position a piece of absorbent cloth on trunk floor to protect paintwork from any fluid spillage.
8. Sever and remove tie strap securing hydraulic pump hose to pump harness.

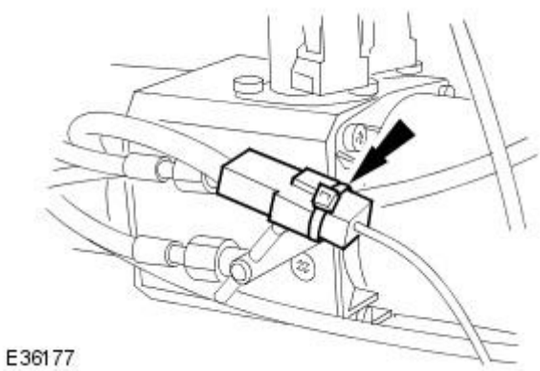

E36177

9. Mark with location and slacken and disconnect hydraulic hoses from pump.

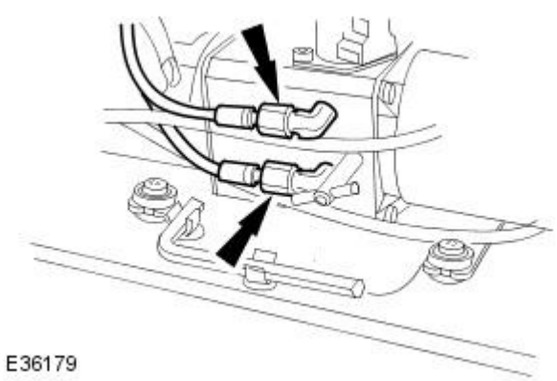

E36179

10. Remove and discard 'O' ring seals from hose connectors and fit blanking plugs to hoses and pump connectors.
11. Remove rear seat cushion. Refer to 76.70.37.
12. Remove rear seat squab. Refer to 76.70.38.
13. Remove LH rear quarter casing capping. Refer to 76.13.73.
14. Remove LH rear quarter casing. Refer to 76.13.73.
15. Remove LH rear speaker (premium ICE only). Refer to 86.51.06.
16. Remove front LH seat. Refer to 76.70.01.90.
17. Remove 'J' gate surround. Refer to 76.25.24.
18. Remove centre console. Refer to 76.25.01.
19. Remove LH sill treadplate. Refer to 76.76.01.
20. Remove glovebox. Refer to 76.52.03.
21. Remove fascia LH end fusebox. Refer to 86.70.57.
22. Remove roof console. Refer to 76.13.69.
23. Remove the sun visors. Refer to 76.10.48
24. Remove the sun visor retaining clips. Refer to 76.10.58
25. Remove 'A' post upper trim finishers. Refer to 76.13.31.

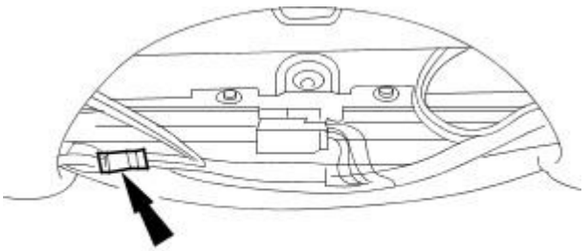

E35717

26. Where applicable disconnect microphone harness multiplug.

27. Carefully remove and discard fir tree fastener retaining trim finisher on header rail and remove finisher from header rail.

28. Remove convertible top latch assembly cover panel. Refer to 76.86.20.

29. Disconnect convertible top harness multiplug.

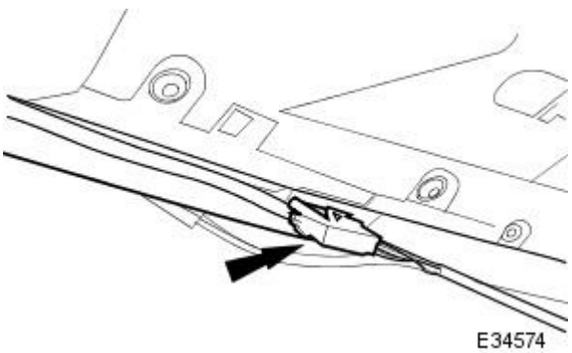

E34574

30. Release hydraulic hose retaining clips from LH upper 'A' post.

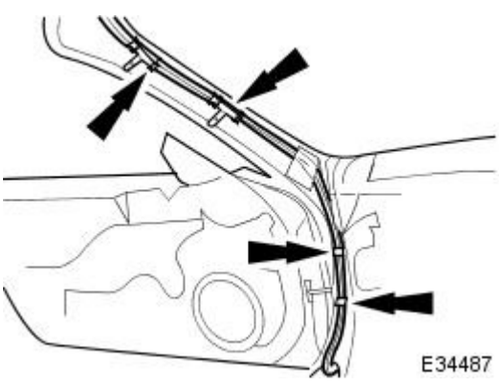

E34487

31. Release sun visor multiplugs from retainers on latch assembly bracket.

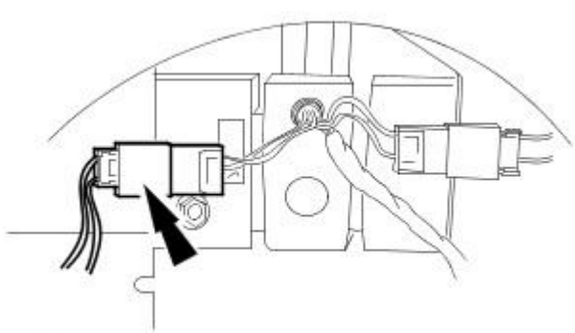

E36182

32. Position a piece of absorbent cloth in LH footwell to protect vehicle interior from any fluid spillage.

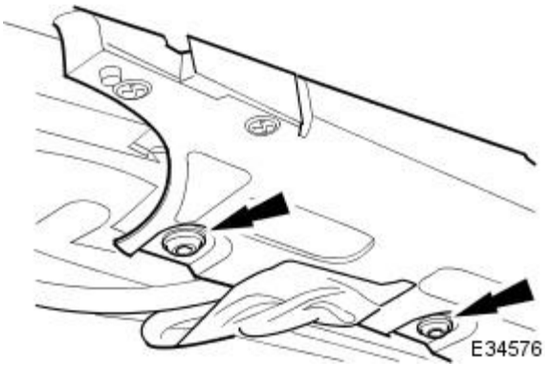

33. Slacken and remove the latch assembly to BIW header lower securing screws.

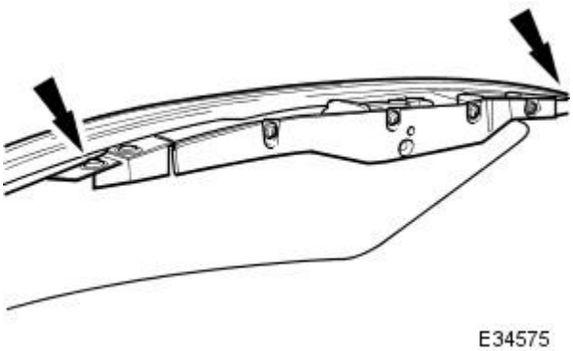

34. Slacken and remove the latch assembly to BIW header upper securing screws.

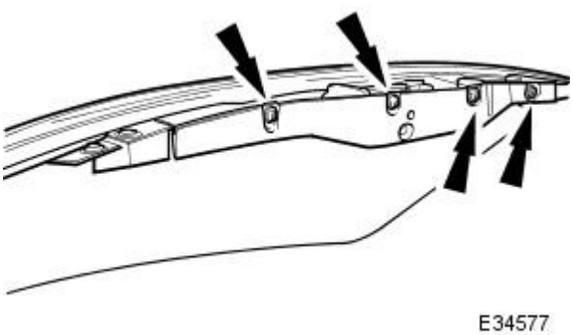

35. NOTE: When carrying out the following operation, do not disturb securing bolts installed in the open-ended slots.

Slacken and remove the latch assembly to BIW header rear securing screws.

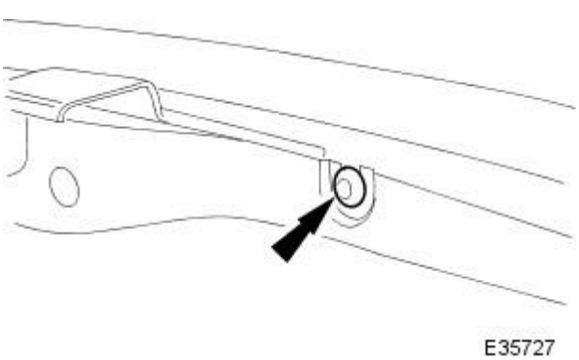

36. Supporting latch assembly, slacken but do not remove securing screws installed in rear open-ended slots.

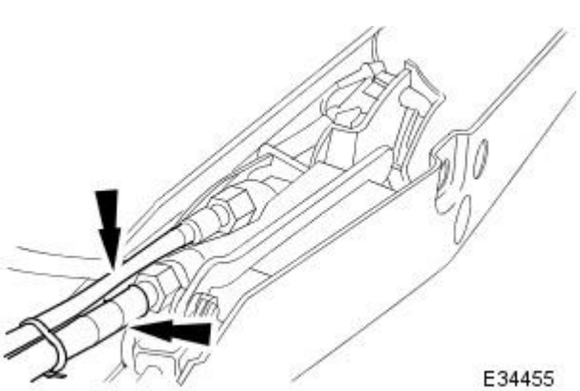

37. Withdraw latch assembly, position in LH footwell and sever and remove tie straps securing hoses to latch hydraulic cylinder and harness.

38. Mark latch hydraulic cylinder hoses with locations and disconnect hoses from cylinder assembly.

39. Remove and discard 'O' ring seals from hoses and fit blanking plugs to hoses and hydraulic cylinder connectors.

40. Remove and discard tape securing hoses to 'A' post adjacent to top of fascia.

41. Withdraw hoses from retaining clips in fascia LH end fusebox aperture.

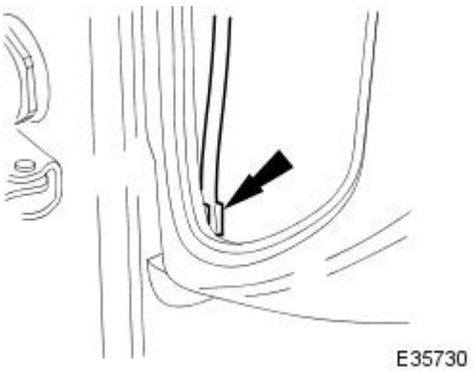

42. Route hoses from behind fascia to lower 'A' post.

43. Remove tape securing hoses to front of inner sill.

44. Lift edge of LH carpet for access, sever and remove tie straps securing hoses and release hoses from BIW clips.

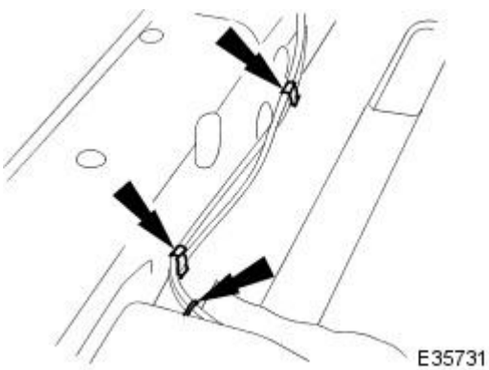

45. Release hoses from spring clip at transmission tunnel and draw hoses under carpet to tunnel.

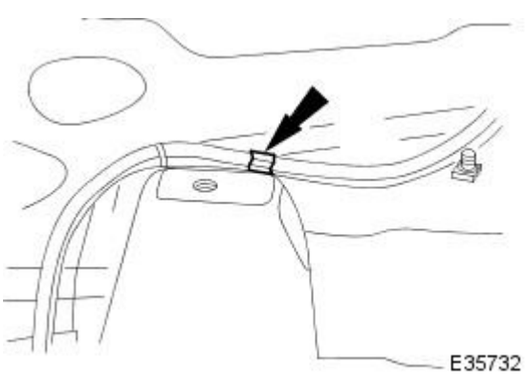

46. Lift LH carpet at transmission tunnel and heel board and release hoses from retaining clips.

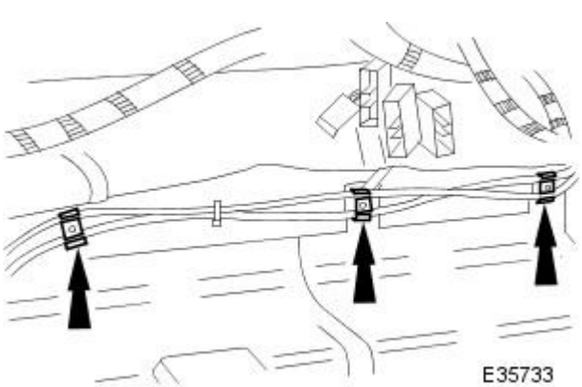

47. withdraw hoses from under transmission tunnel insulation, harness and carpet.

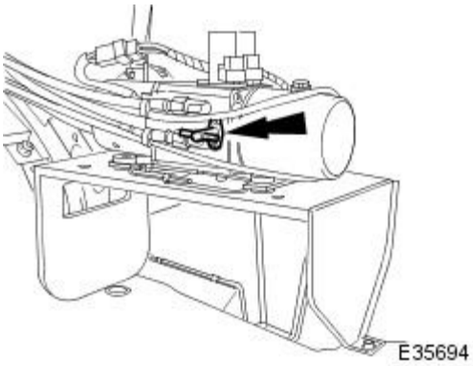

48. Rotate hydraulic pump valve fully counter-clockwise to the manual operation position.

49. Manually move convertible top to fully up position.

50. Sever and remove tie straps securing hoses to power cable and rear harness.

51. Carefully withdraw hoses through BIW aperture into vehicle interior and remove from vehicle.

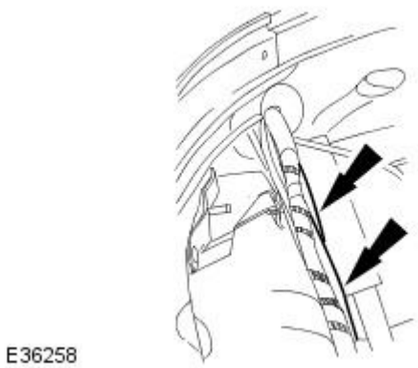

Installation

1. Position hoses in convertible top stowage compartment.

2. Route hydraulic pump end of hoses through BIW aperture into trunk.

3. Remove blanking plugs from hoses and pump connectors.

4. Fit new 'O' ring seals to hoses and fit and tighten hoses onto pump.

5. Mark free end of each hose with position of corresponding connector on latch hydraulic cylinder as identified on removal.

6. Secure pump harness to hoses with new tie strap.

7. Route hydraulic hoses along rear harness and power cable and using new tie straps secure hoses to BIW at rear quarter above wheel arch.

8. Using new tie straps, secure rear harness and hydraulic hoses to BIW.

9. Using new tie straps, secure hydraulic hoses to power cable.

10. Manually move convertible top to fully lowered position.

11. Route hydraulic hoses under carpet, transmission tunnel insulation and harness.

12. Fit and fully seat hoses in retaining clips on carpet underside.

13. Fit and secure hoses in new BIW tie straps.

14. Route hoses under carpet across rear of footwell to 'A' post.

15. Install hoses in spring clip at transmission tunnel.

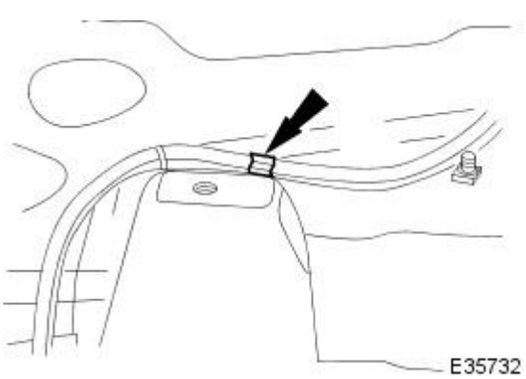

16. Under front section of carpet, fit new tie straps to BIW and secure hydraulic hoses.

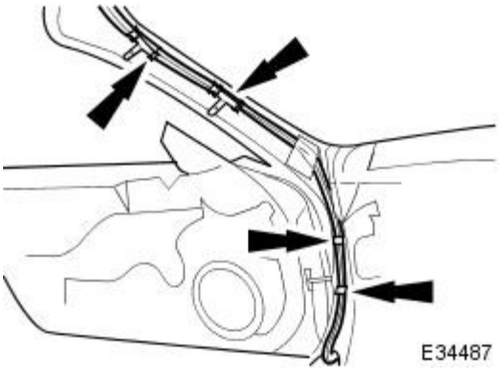

17. Route hoses up LH 'A' post, and accessing through fascia end fuse box aperture, fit and fully seat in retaining clips.

18. Using linen tape, secure hydraulic hoses to front of inner sill and top and bottom of upper 'A' post.

19. Remove blanking plugs from hose connectors and fit new 'O' ring seals.

20. Noting positions marked on hose connectors, fit and tighten hoses on hydraulic cylinder.

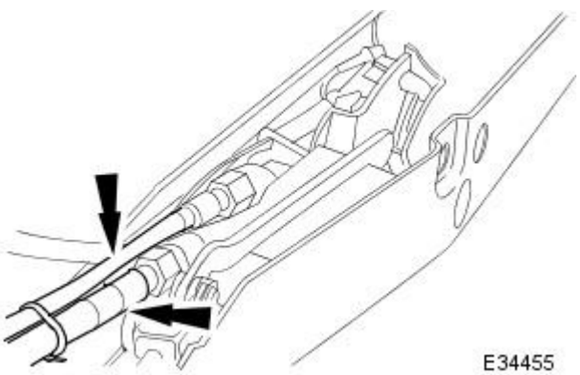

21. Using new tie strap, secure hoses to hydraulic cylinder.

22. Fit and fully seat hydraulic hose retaining clips on upper 'A' post.

23. Fit fascia LH end fusebox. Refer to 86.70.57.

24. Fit latch assembly to header rail. Refer to 76.86.19.

25. Fit glovebox. Refer to 76.52.03.

26. Fit sill tread plate. Refer to 76.76.01.

27. Fit centre console. Refer to 76.25.01.

28. Fit 'J' gate surround. Refer to 76.25.24.

29. Fit rear speaker assemblies. Refer to 86.51.06.

30. Connect ground cable to battery terminal. Refer to 86.15.15.

31. Rotate hydraulic pump valve fully clockwise to power operation position.

32. Check hydraulic system for satisfactory operation.

1. Power top to fully raised position.
2. Power top to fully lowered position.
3. Power top to fully raised position.
4. Check that all hose connections are free from leakage.

33. Remove protective cloth from LH footwell.

34. Fit LH rear quarter trim panel. Refer to 76.13.73.

35. Fit LH rear quarter panel capping.

36. Fit rear seat cushion. Refer to 76.70.37.

37. Fit rear seat squab. Refer to 76.70.38.

38. Fit front seat. Refer to 76.70.01.90.

39. CAUTION: Two fluid levels are marked on the pump reservoir body. The upper mark denotes fluid level when the top is fully lowered and the lower mark denotes the level when the top is fully raised.

• NOTE: The convertible top hydraulic system is 'self-bleeding' and does not require any further action to dispel entrapped air.

Slacken and remove reservoir filler plug and remove and discard 'O' ring seal.

40. Check fluid level and top up as necessary to low mark on reservoir.

41. Fit new 'O' ring seal to filler plug and fit and fully tighten on reservoir..

42. Remove protective cloth from trunk floor.

43. Fit RH liner to trunk.

44. Fit trunk rear finisher. Refer to 76.19.44.

45. Fit trunk front liner. Refer to 76.19.31.

46. Fit trunk floor carpet.

47. Fit battery cover.

Convertible Top - Convertible Top Material

Removal and Installation

Removal

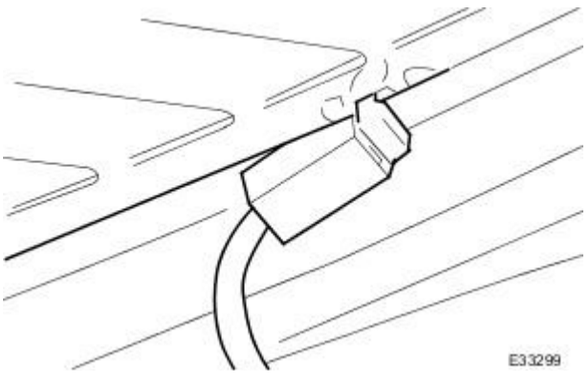

1. Remove carpet from top stowage compartment.
2. Disconnect backlight heater harness multiplugs.

3. Ensuring that backlight heater harness is clear, power top to fully lowered position.
4. Remove rear seat cushion. Refer to 76.70.37.
5. Remove rear seat squab. Refer to 76.70.38.
6. Remove LH and RH rear quarter trim cappings. Refer to 76.13.73.
7. Remove LH and RH rear quarter trim panels. Refer to 76.13.73.
8. Remove rear speaker assemblies. Refer to 86.51.06.
9. Slacken and remove nuts securing squab panel stiffener bracket to BIW and remove bracket from vehicle.

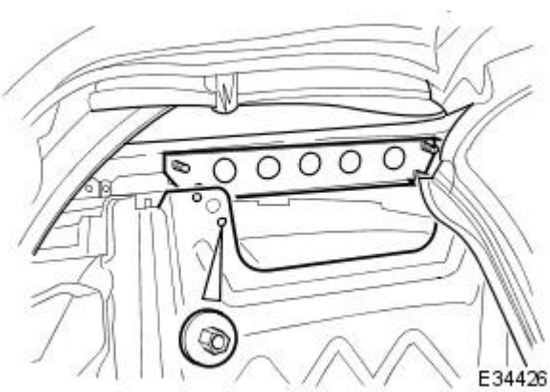

10. Remove heated backlight from roof. Refer to 76.81.11.
11. Noting their positions, remove staples securing cover to backlight frame and release cover from frame.

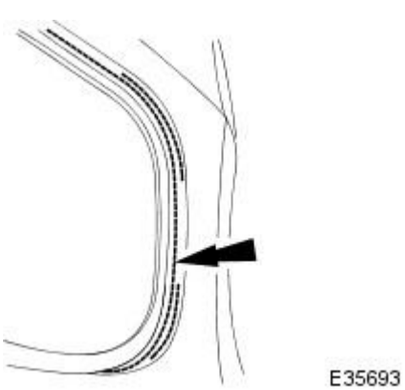

12. NOTE: Do not allow top to latch.

    Power top to 3/4 closed position.
13. Remove battery cover and disconnect ground cable from battery terminal. Refer to 86.15.19.

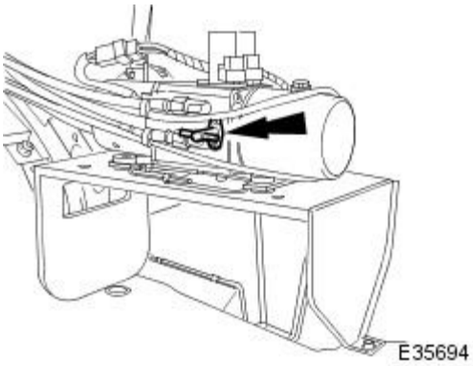

14. Position trunk RH liner for access and turn hydraulic pump valve fully counter-clockwise to manual operation position.

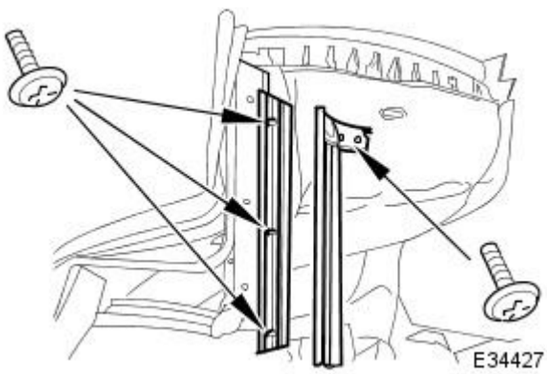

15. Remove LH cantrail seal and carrier.

- Slacken and remove screws securing LH cantrail seal to frame and withdraw seal.
- Slacken and remove screws securing LH cantrail seal carrier and remove seal carrier from vehicle.

16. Slacken and remove screws securing RH cantrail seal to frame and remove seal.

17. Slacken and remove screws securing RH cantrail seal carrier and remove seal carrier.

18. Remove LH main column seal and carrier.

- Withdraw LH main column seal from carrier.
- Slacken and remove screws securing seal carrier and remove carrier from vehicle.

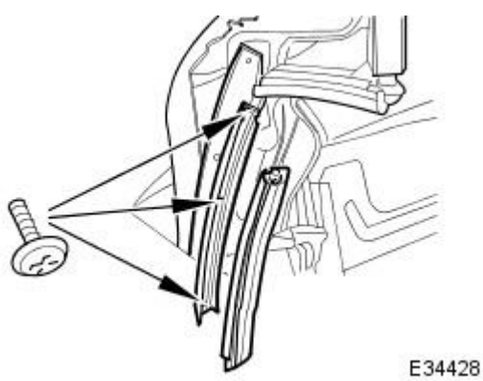

19. Release and remove RH main column seal from carrier.

20. Slacken and remove screws securing RH main column seal carrier and remove carrier.

21. Remove latch striker and guide pins.

- Slacken and remove latch striker securing screws and remove striker from header plate.
- Slacken and remove screws securing latch plate guide pins to frame and remove guide pins.

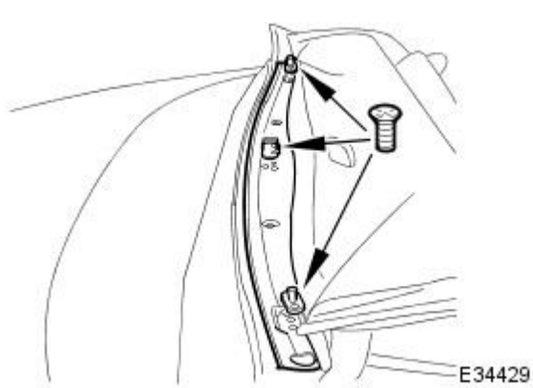

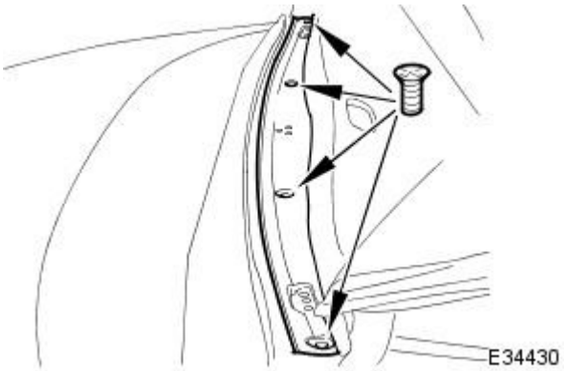

22. Slacken and remove screws securing latch plate to frame and remove latch plate.

23. Noting positions for installation, release bonded sections of cover from frame.

24. Disconnect convertible top side tension cables from frame.

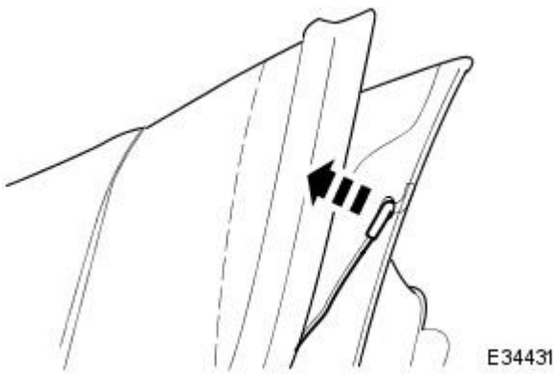

25. Release cover front retaining rod from retaining clips in frame and remove rod from cover.

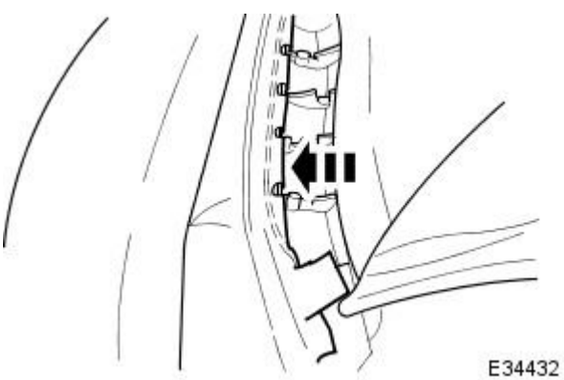

26. Manually close but do not latch top.

27. Slacken and remove screws securing headlining rear quarters to main column bracket cover plates.

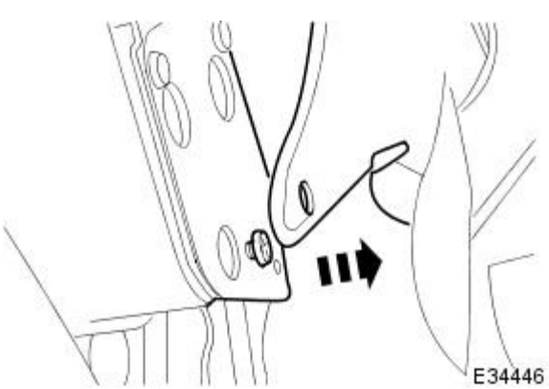

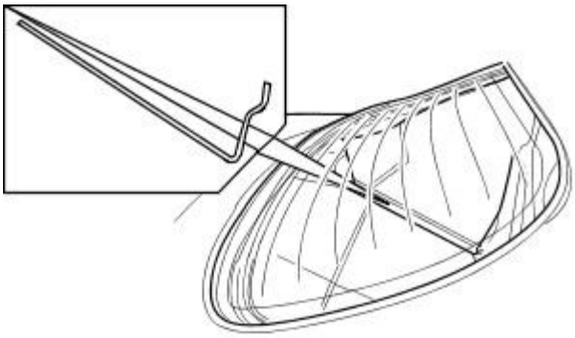

E34433

28. Release and remove headlining rear securing rods.

E34434

29. Slacken and remove bolts securing rear tack strip to BIW.

30. Withdraw tack strip from vehicle and remove end covers from tack strip.

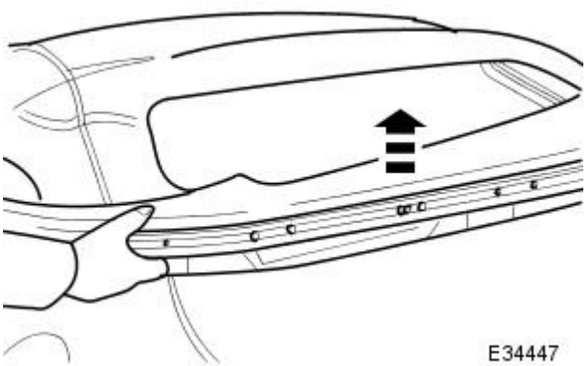

E34447

31. Apply protective tape to adjacent painted areas of BIW.

32. Position tack strip clear of BIW and drill out pop rivets securing tack strip to cover.

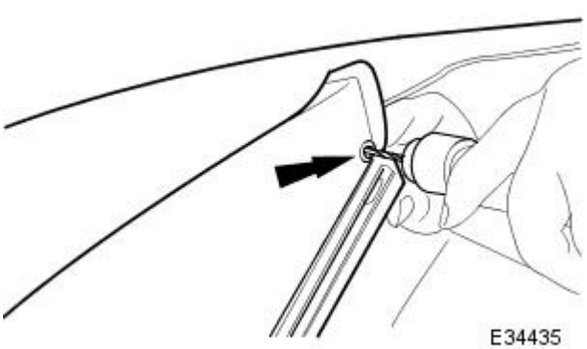

E34435

33. Release cover from tack strip and withdraw side tension cables through cover piping.

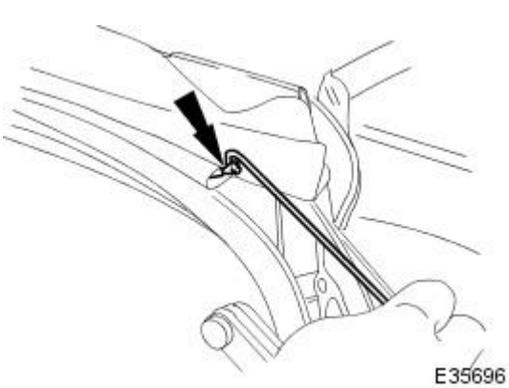

E35696

34. Remove cover from vehicle.

35. Remove sealing strip from backlight frame and clean off any residual sealant.

36. Noting positions for installation, clean residual adhesive from frame.

37. Using white spirit, ensure that frame is grease free and dry.

Installation

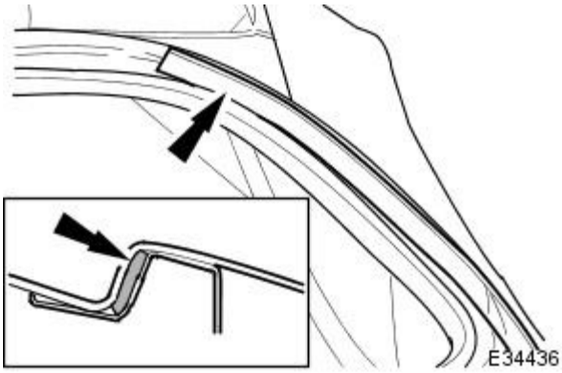

1. Apply new sealant strip to backlight frame.

2. Place cover on clean work surface, fold in half to determine centre and mark centreline with tape at rear edge.

3. Measure and mark centreline of tack strip.

4. Position cover on frame, aligning tape with tack strip centreline.

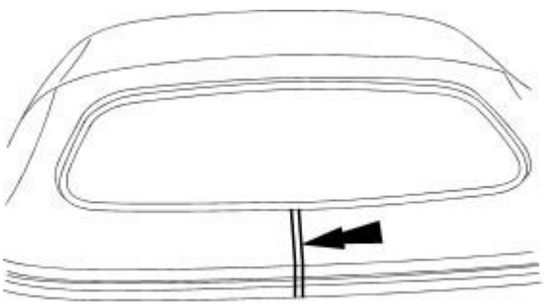

5. NOTE: It may be necessary to use a suitably soft drift and mallet to fully seat cover in tack strip.

Fit and fully seat rear edge of cover in tack strip retaining flange.

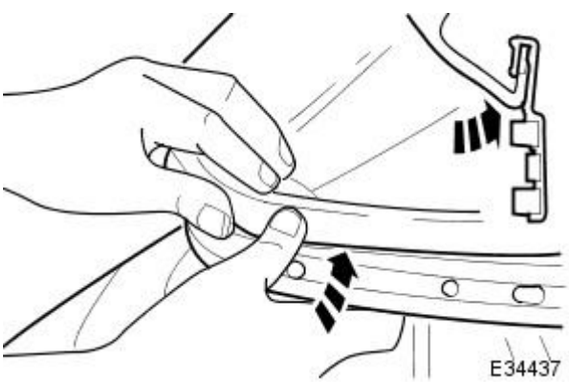

6. Using a suitable pointed tool pierce cover through existing holes in tack strip, drill through penetrations and pop rivet cover to tack strip.

7. Fit end covers to tack strip.

8. Position tack strip on BIW and commencing in centre fit and tighten securing bolts.

E34434

9. Using a piece of welding rod or similar material, draw side tension cables through cover piping

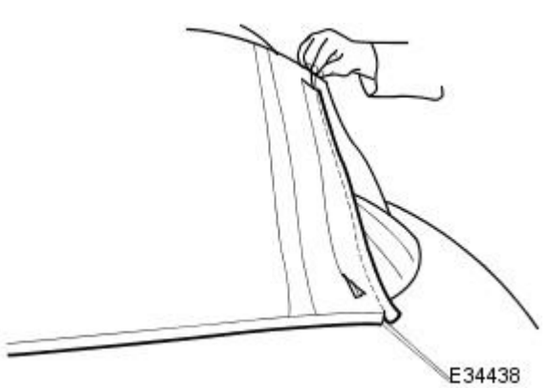

10. Ensure that cover is correctly positioned on frame.

11. Manually lower top to halfway position.

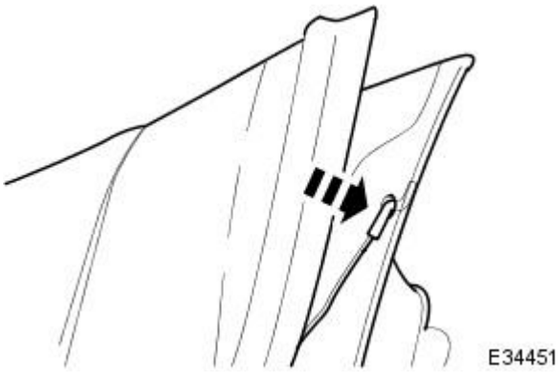

12. Connect side tension cables to frame.

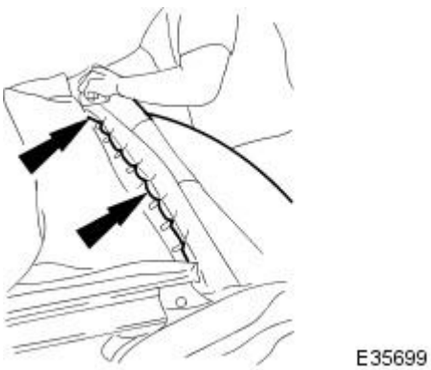

13. Apply adhesive to adjacent front positions of cover and frame and fully seat cover on frame.

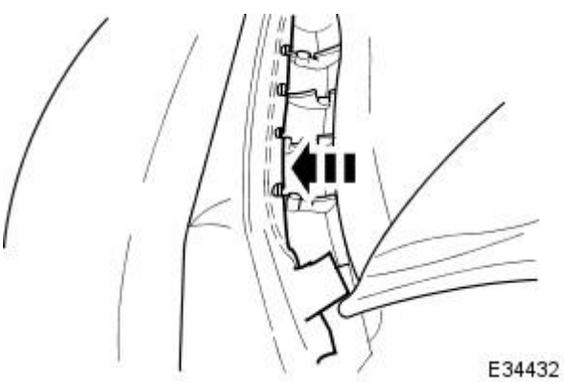

14. Fit front retaining rod to cover and seat rod in retaining clips.

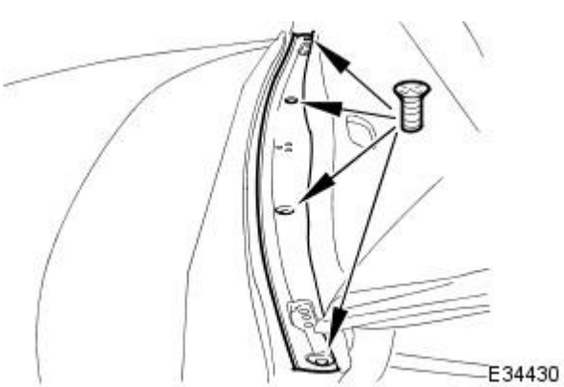

15. Position latch plate and fit and tighten securing screws.

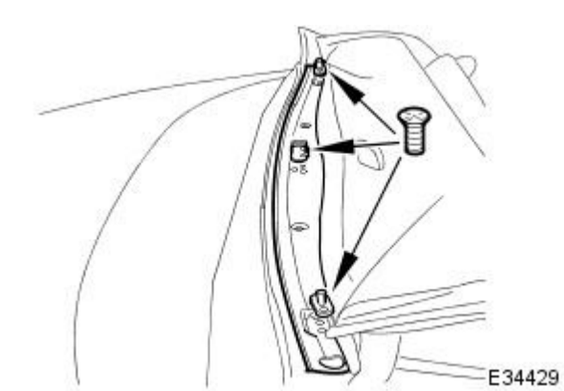

16. Fit guide pins and latch striker.

- Position guide pins and fit and tighten securing screws.
- Position latch striker and fit and tighten securing screws.

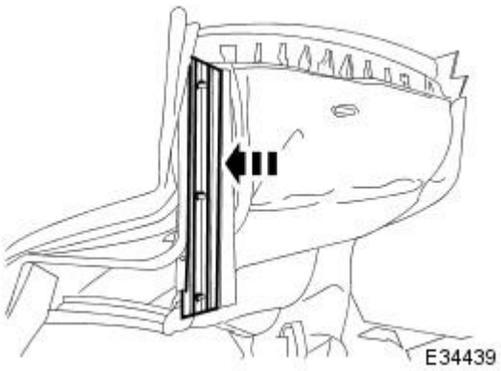

17. Fit cantrail seal carriers.

- Position cantrail seal carriers and fit but do not securing screws.
- Ensuring that seal carriers are positioned towards outboard end of elongated holes, tighten securing screws.

18. Fit and fully seat cantrail seals in carriers and fit and tighten securing screws..

19. Connect ground cable to battery terminal. Refer to 86.15.15.

20. Turn hydraulic pump valve fully clockwise to power operation position.

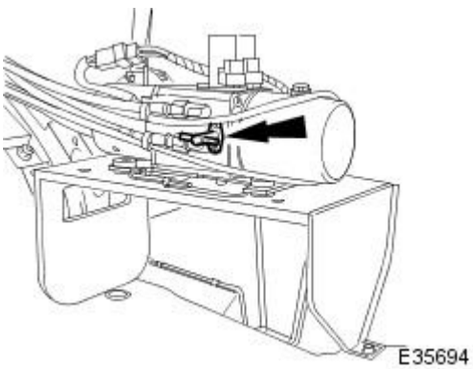

21. Ensuring that rear quarter lights are fully lowered, power top to fully up and latched position.

22. Apply adhesive to adjacent areas of cover and frame at main column and fully seat cover on frame.

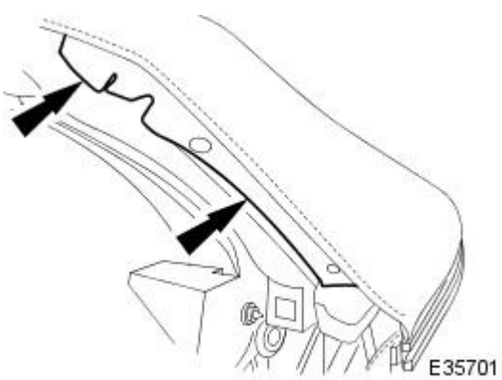

23. Power top to half down position.

24. Fit main column seal carriers.

- Position main column seal carriers and fit but do not tighten securing screws.
- Ensuring that carriers are positioned towards outboard end of elongated holes, tighten securing screws.

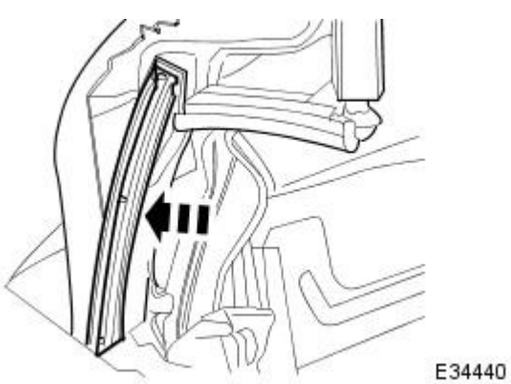

25. Fit and fully seat main column seals in carriers.

26. Power top to fully up and latched position.

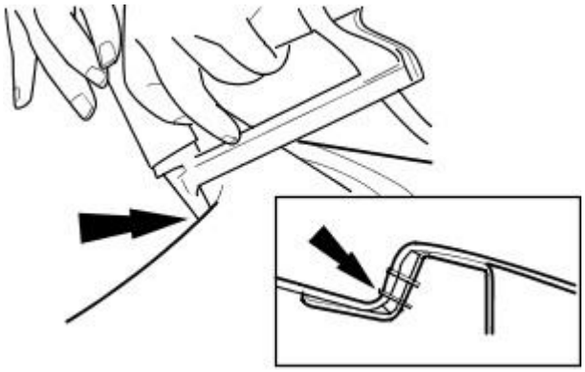

27. Staple cover to backlight frame.

- Commencing at bottom centre and working to position half-way up one side, staple cover to backlight frame. If necessary, slit cover within backlight frame to relieve tension.
- Repeat stapling operation along opposite side.

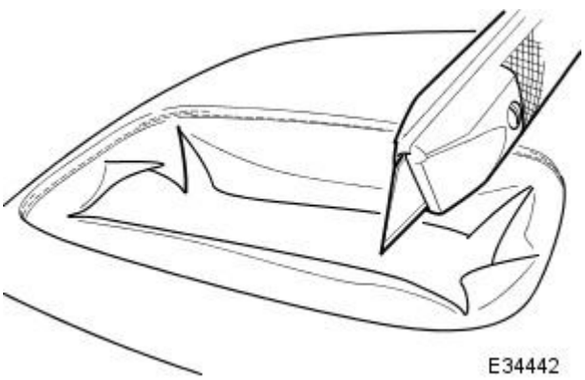

28. Commencing at top centre, staple cover along top and down sides to meet previous stapling, if necessary, gradually slitting cover within frame to relieve tension in fabric. At each corner, add a further outer row of staples for reinforcement.

29. Trim off excess fabric to facilitate backlight fitment.

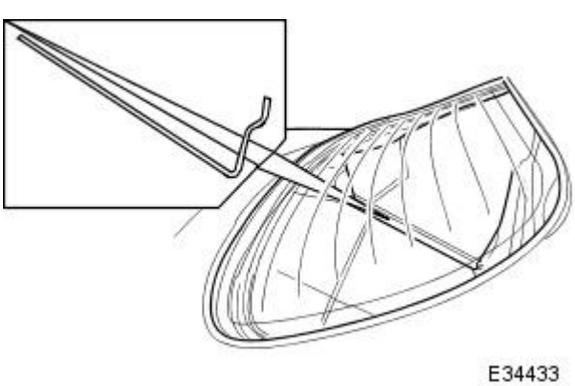

30. Position headlining and fit and fully seat rear securing rods.

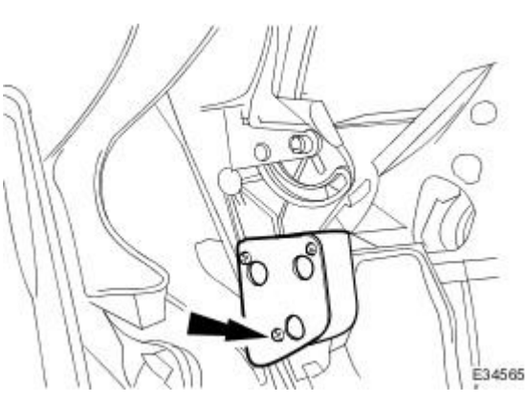

31. Position headlining over cover plates and fit and tighten securing screws.

32. Remove protective tape from BIW.

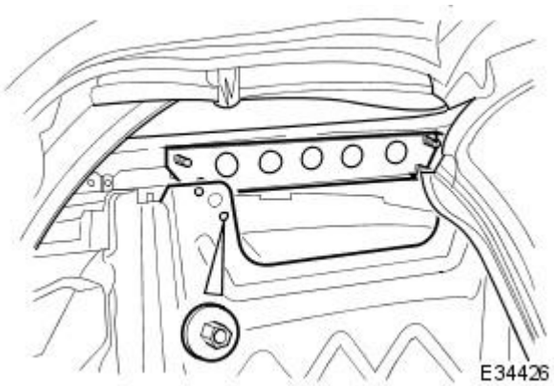

33. Power top from fully down to fully up positions, checking for satisfactory operation and ensuring that cover is correctly tensioned and free from rippling.

34. Position squab panel stiffener bracket and fit and tighten securing nuts.

35. Fit heated backlight. Refer to 76.81.11.

36. Fit carpet to convertible top stowage compartment.

37. Fit rear speaker assemblies. Refer to 86.51.06.

38. Fit rear quarter trim panels. Refer to 76.13.73.

39. Fit rear quarter panel cappings. Refer to 76.13.73.

40. Fit rear seat squab. Refer to 76.70.38.

41. Fit rear seat cushion. Refer to 76.70.37.

42. Connect backlight heater harness multiplugs.

43. Fit battery cover.

Convertible Top - Header Rail Lower Trim Panel

Removal and Installation

1. Remove roof console. Refer to 76.13.69.
2. Remove interior mirror. Refer to 76.10.56.
3. Remove the sun visors. Refer to 76.10.48
4. Remove the sun visor retaining clips. Refer to 76.10.58
5. Remove both 'A' post upper finishers. Refer to 76.13.31.
6. Withdraw finisher from header rail.

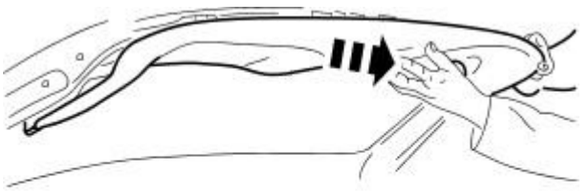

E36045

Installation

1. Position and fully seat finisher on header rail.

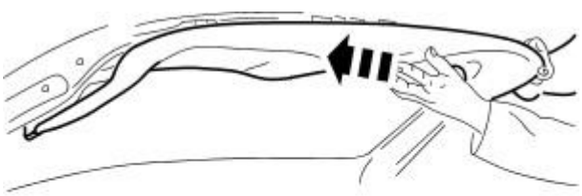

E36046

2. Install 'A' post upper finishers. Refer to 76.13.31.
3. Install the sun visor retaining clips. Refer to 76.10.58
4. Install the sun visors. Refer to 76.10.48
5. Install roof console. Refer to 76.13.69.
6. Install interior mirror. Refer to 76.10.56.

Convertible Top - Header Rail Upper Trim Panel

Removal and Installation

Removal

1. Power convertible top to fully lowered position.
2. Remove battery cover and disconnect ground cable from battery terminal. Refer to 86.15.19.
3. Remove roof console. Refer to 76.13.69.
4. Where fitted, disconnect microphone harness multiplug.

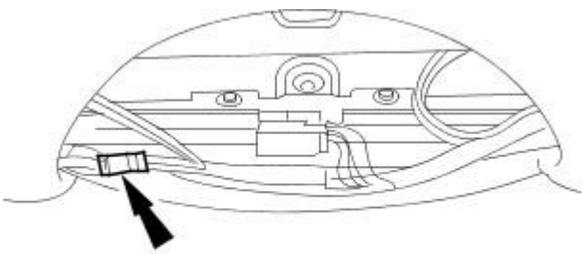

E35717

5. Remove the sun visors. Refer to 76.10.48
6. Remove sun visor retaining clips. Refer to 76.10.58
7. Remove 'A' post upper trim finishers. Refer to 76.13.31.
8. Carefully remove and discard fir tree fastener retaining trim finisher on header rail and remove finisher from header rail.

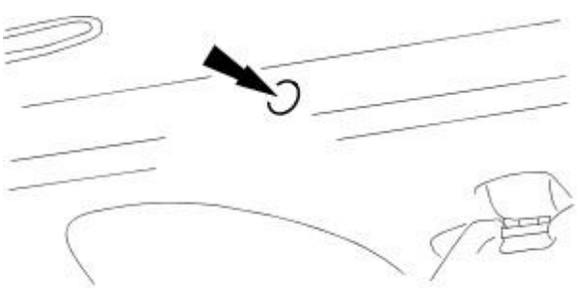

E35725

9. Carefully remove and discard retaining stud from LH end of header seal.

E36259

10. Lift rear edge of seal for access and slacken and remove latch cover LH securing screw.

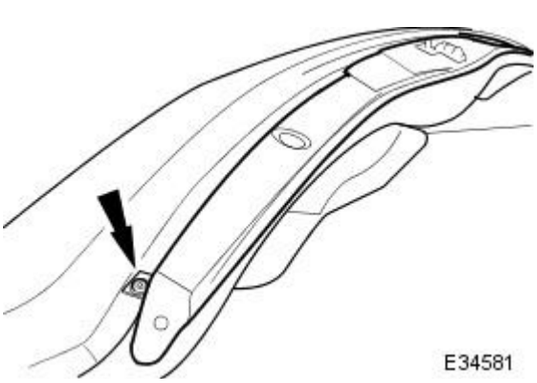

E34581

11. Remove and discard retaining stud from RH end of header seal, lift rear edge of seal and slacken and remove latch cover RH securing screw.

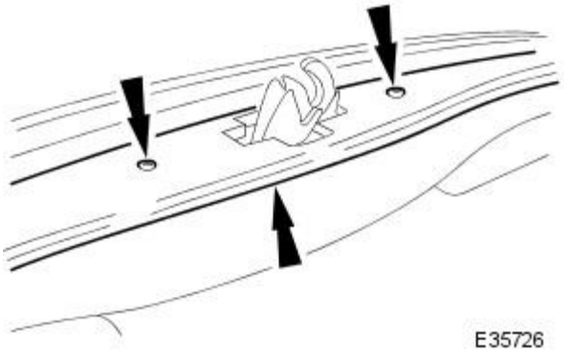

12. Slacken and remove the latch cover centre securing screws and remove latch cover from header rail.

Installation

1. Position latch cover on header rail and fit and tighten centre securing screws.
2. Lift RH edge of header seal for access and fit and tighten the latch cover RH securing screw.
3. Fit and fully seat new retaining stud to RH end of header seal.
4. Lift LH edge of header seal for access and fit and tighten the latch cover LH securing screw.
5. Fit and fully seat new retaining stud to LH end of header seal.
6. Ensuring that microphone flying lead is routed towards harness multiplug, position trim finisher on header rail and secure with new fir tree fastener.
7. Fit 'A' post upper trim finishers. refer to 76.13.31.
8. Fit the sun visor retaining clips. Refer to 76.10.58
9. Fit the sun visors. Refer to 76.10.48
10. Connect microphone flying lead to harness.
11. Fit roof console. Refer to 76.13.69.
12. Fit ground cable to battery terminal and fit battery cover. Refer to 86.15.15.
13. Power convertible top to fully raised position

Convertible Top - Header Rail Weatherstrip

Removal and Installation

Removal

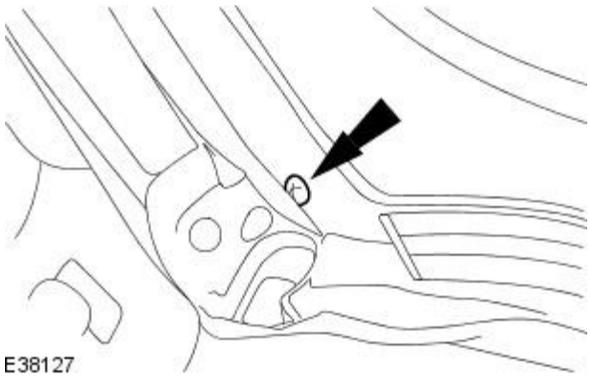

1. Power the convertible top to the fully lowered position.
2. Remove the header rail weatherstrip right-hand retaining screw.

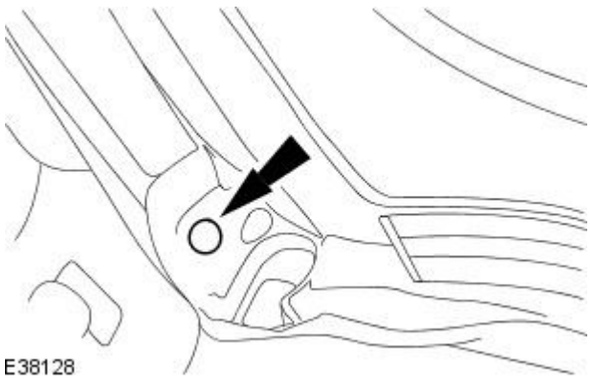

3. Detach the header rail weatherstrip right-hand upper retaining clip.

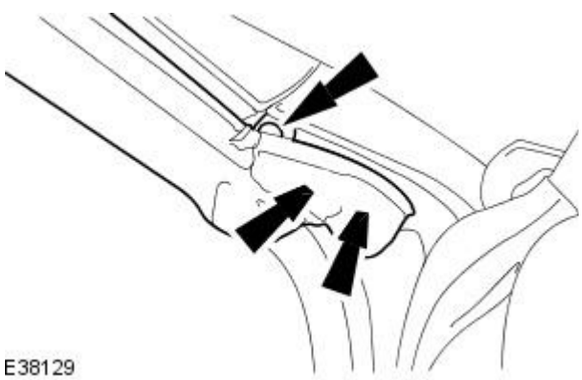

4. Detach the header rail weatherstrip right-hand lower retaining clips.

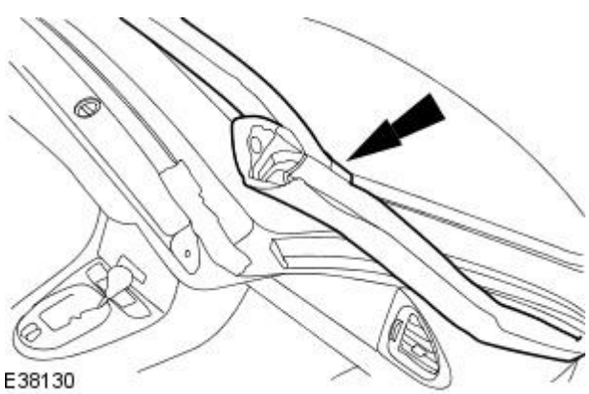

5. Detach the header rail weatherstrip from the right-hand locating channel.

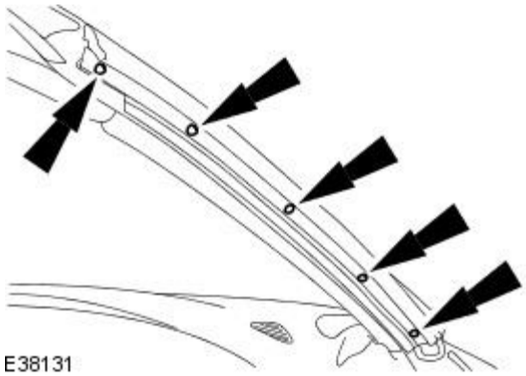

6. Remove the header rail weatherstrip right-hand locating channel.

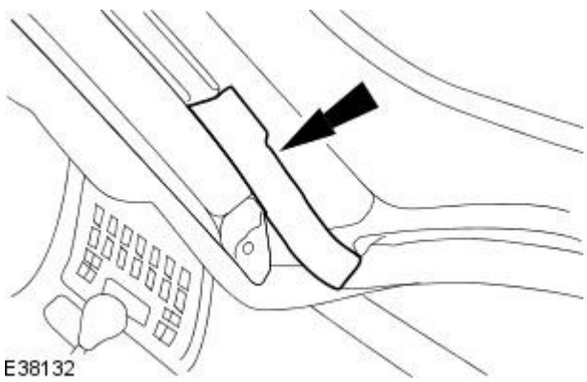

7. NOTE: Note the position of the header rail weatherstrip right-hand insulator.

Remove and discard the header rail weatherstrip right-hand insulator.

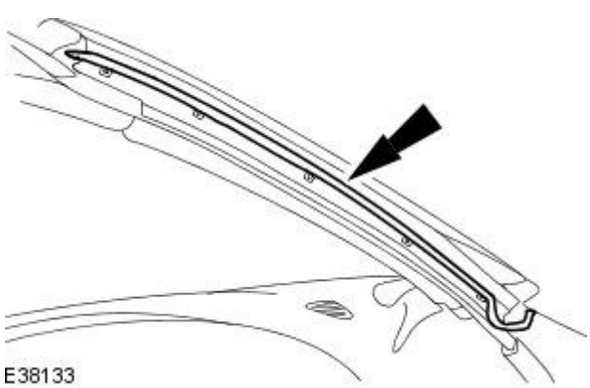

8. NOTE: Note the position of the header rail weatherstrip right-hand locating channel insulator.

Remove and discard the header rail weatherstrip right-hand locating channel insulator.

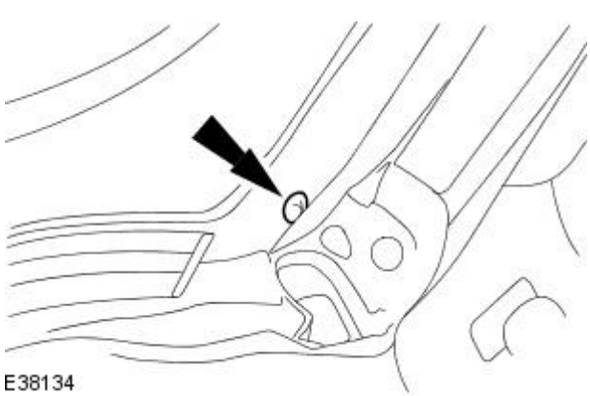

9. Remove the header rail weatherstrip left-hand retaining screw.

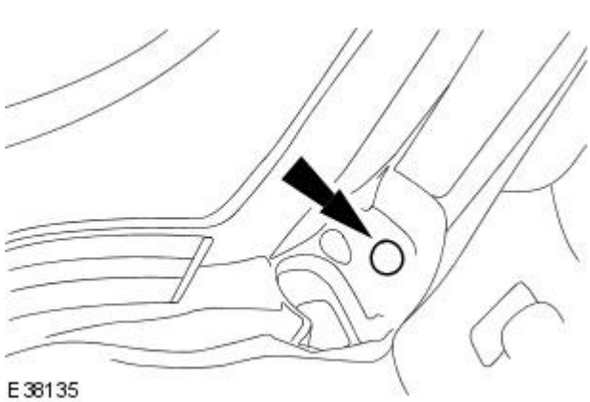

10. Detach the header rail weatherstrip left-hand upper retaining clip.

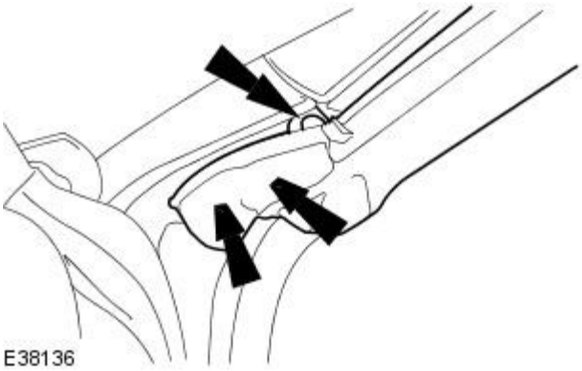

11. Detach the header rail weatherstrip left-hand lower retaining clips.

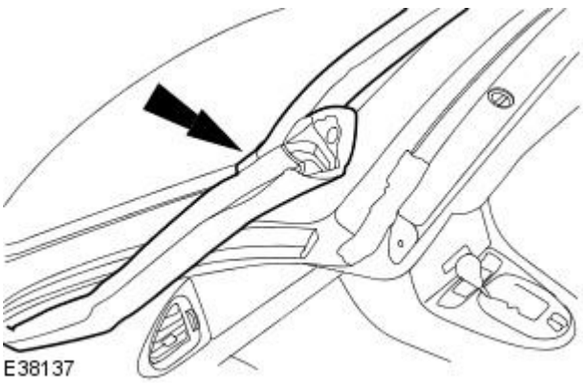

12. Detach the header rail weatherstrip from the left-hand locating channel.

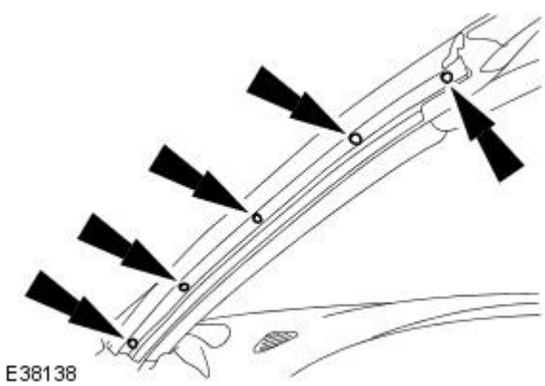

13. Remove the header rail weatherstrip left-hand locating channel.

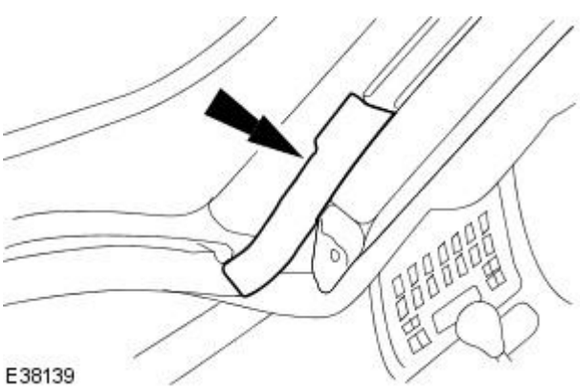

14. NOTE: Note the position of the header rail weatherstrip left-hand insulator.

Remove and discard the header rail weatherstrip left-hand insulator.

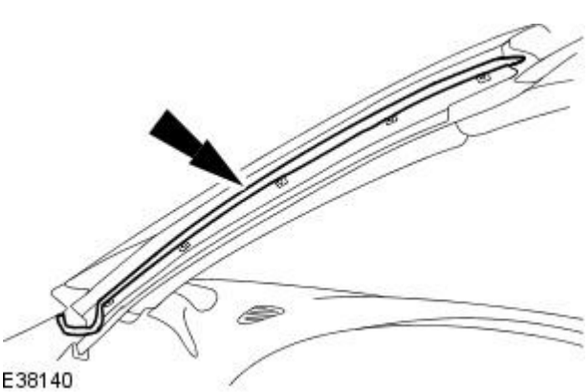

15. NOTE: Note the position of the header rail weatherstrip left-hand locating channel insulator.

Remove and discard the header rail weatherstrip left-hand locating channel insulator.

16. NOTE: Note the position of the header rail weatherstrip.

Remove the header rail weatherstrip from the header rail.

Installation

1. CAUTION: Make sure all adhesive has been removed from the insulator mating surfaces.

• NOTE: Install the header rail weatherstrip to the position noted during removal.

• NOTE: Install new header rail weatherstrip locating channel insulators to the positions noted during removal.

• NOTE: Install new header rail weatherstrip insulators to the positions noted during removal.

To install, reverse the removal procedure.

Bumpers -

Torques

Component	Nm
Bolts securing bumper beam to strut	39 - 51
Bolts securing bumper guide to body	15,5 - 20,5
Bolts securing energy absorbing strut to body	22 - 28
Bolts securing non-energy absorbing strut to body	15,5 - 20,5

Bumpers - Bumpers

Description and Operation

Front Bumper

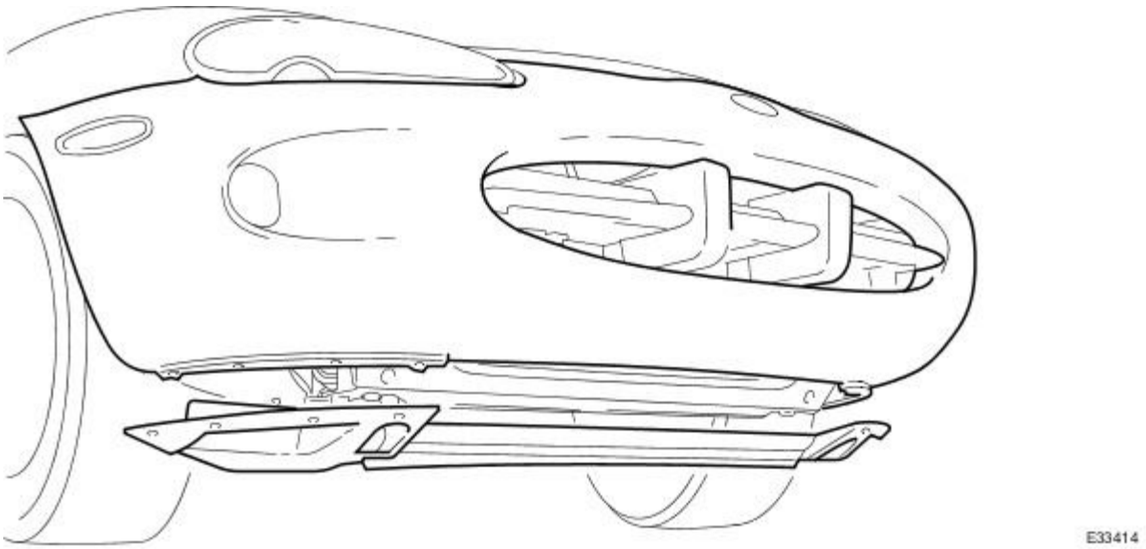

The front bumper is part of a fully integrated 'soft front end' that satisfies bumper impact requirements. The bumper has a polyurethane cover color-matched to the body and moulded to form an elliptical air intake. The cover is secured to the body via fixings to the fenders and the BIW upper crossmember. The lower section of the cover The cover lower extremity is attached to a GMT undertray fitted to assist air flow through the cooling pack and is supported in the center by clips integral with the overrider covers.

Front Bumper Beam , Mounting Struts and Splitter Vane

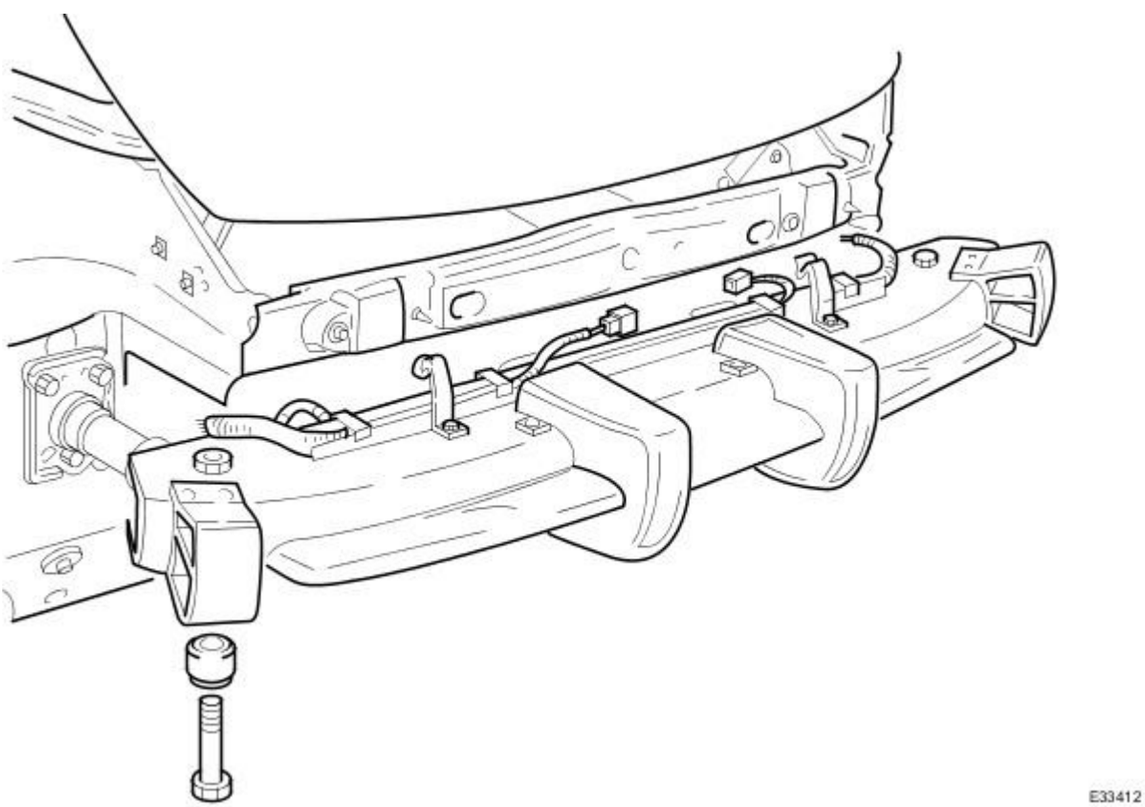

Glass mat thermoplastic (GMT) bumper beams are secured by a single bolt and nut to each of two GMT mounting brackets, each of which is in turn attached to the BIW by three bolts and nuts. Aluminum bumper beams installed for certain markets are similarly mounted, but employ menasco energy absorbing struts instead of GMT mounting brackets.

A chromed splitter vane, located centrally in the air intake, is secured to the bumper beam lower face by three rivets. Two polycarbonate overrider covers that fit over the splitter vane and overriders are secured by scrivets to the upper face of the bumper beam.

A plastic air deflector is attached to the undertray in each wheelarch area to improve airflow in the front wheel area.

Left- and right-handed twin circular fog lamps installed in recesses in the lower section of the cover are accessed by removal of the undertray. Side marker lamps fitted to the bumper cover for some markets, serve only as side reflectors for other markets. Side marker lamps/reflectors are pressed in from the outside and unclipped from inside.

Rear Bumper Assembly and Mountings

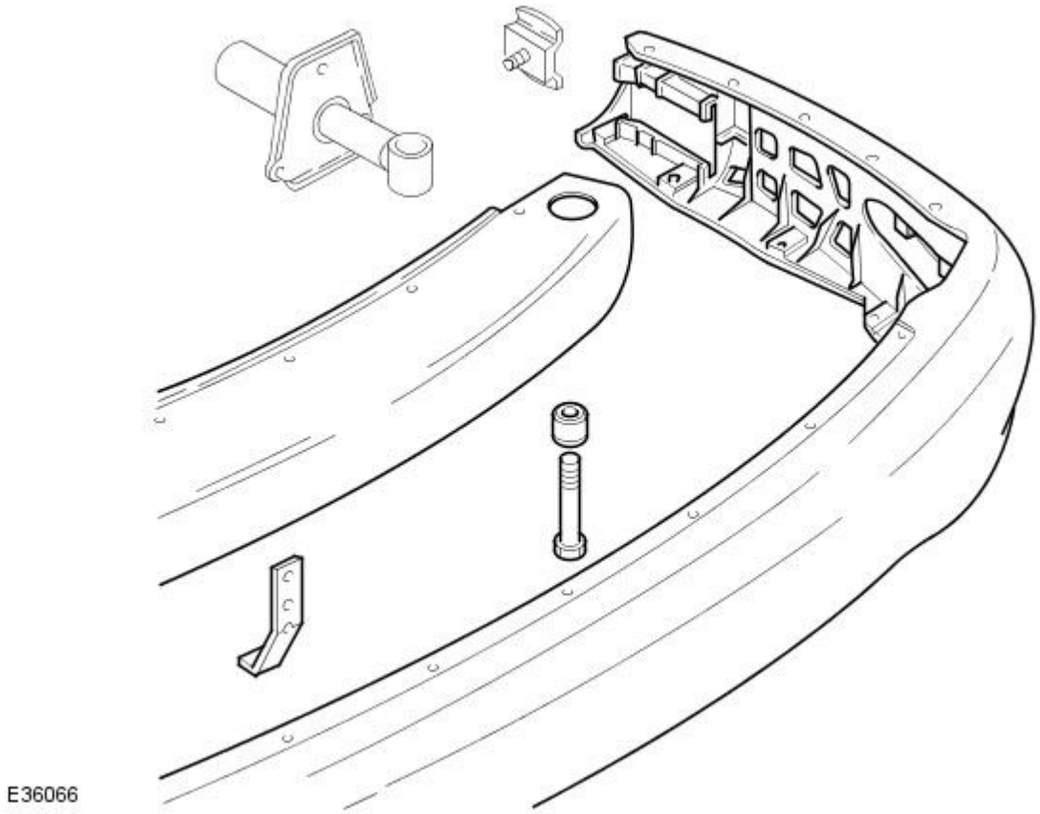

The rear bumper has a color matched, moulded polyurethane cover mounted on a GMT or aluminum beam dependent upon the market. The beams are respectively mounted on two brackets or energy absorbing menasco struts, each of which is located and secured to the BIW by three bolts.

The bumper cover incorporates integral LH and RH support armatures which engage in guide blocks secured to the body by a captive bolt and a nut. Under low speed impact, this configuration enables the bumper to move forward on the guide blocks, preventing rear body damage.

Rear side marker lamps/reflectors are fitted and removed in the same manner as those at the front.

Bumpers - Front Bumper

Removal and Installation

Removal

1. Remove the front bumper cover.
   For additional information, refer to: Front Bumper Cover (501-19 Bumpers, Removal and Installation).
2. Detach the ambient air temperature sensor.

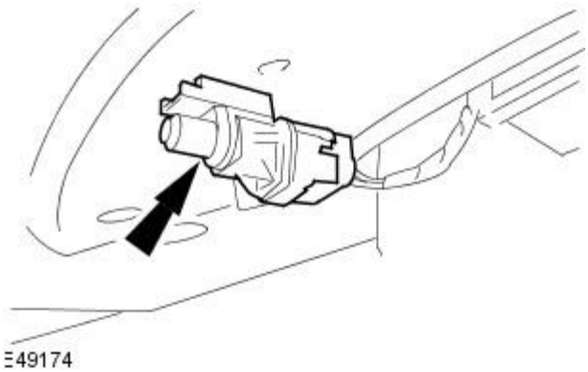

3. Detach the power steering oil cooler.

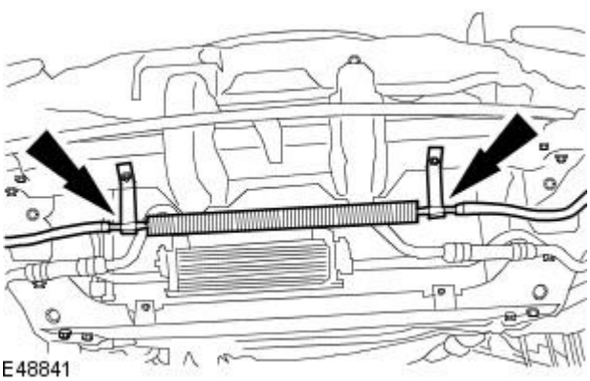

4. Detach the headlamp washer hose.

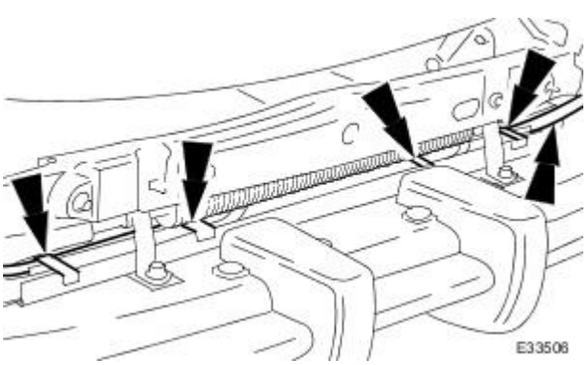

5. Remove the wiring harness to front bumper retaining clips.

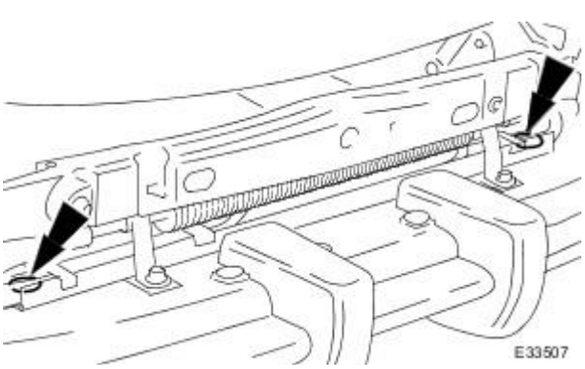

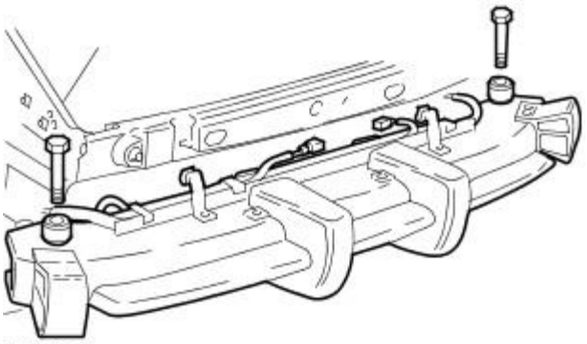

6. Remove the front bumper.

Installation

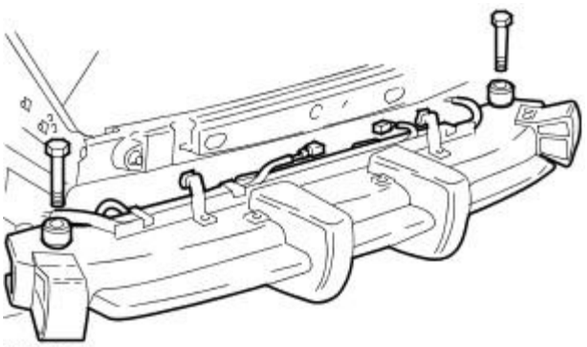

1. Install the front bumper.

- Tighten to 45 Nm.

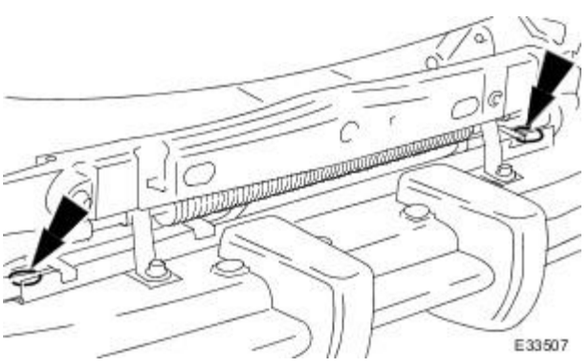

2. Install the wiring harness to front bumper retaining clips.

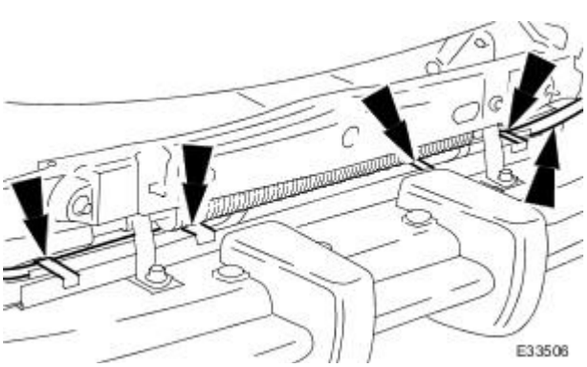

3. Attach the headlamp washer hose.

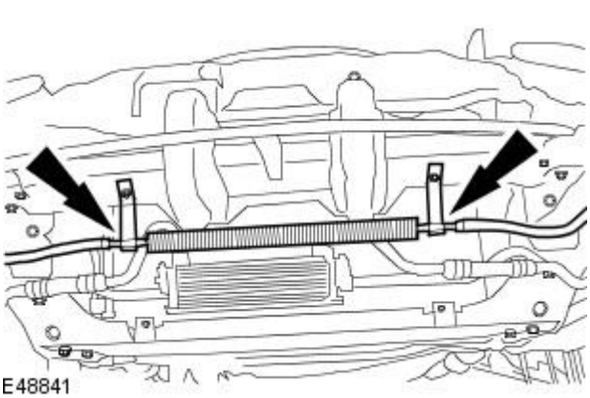

4. Attach the power steering oil cooler.

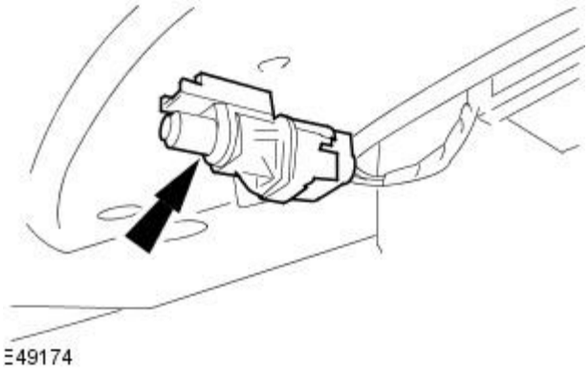

5. Attach the ambient air temperature sensor.

6. Install the front bumper cover.
For additional information, refer to: Front Bumper Cover (501-19 Bumpers, Removal and Installation).

Bumpers - Front Bumper Cover

Removal and Installation

Removal

Vehicles with supercharger

1. Remove the radiator grill.

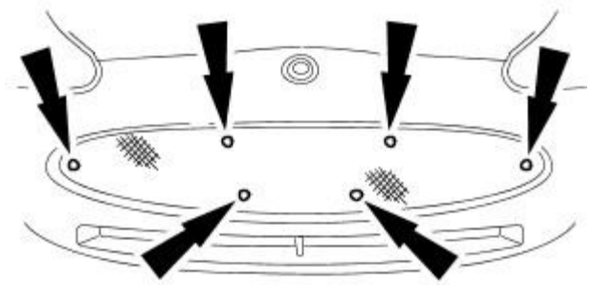

E49171

All vehicles

2. Remove the radiator splash shield.
For additional information, refer to: Radiator Splash Shield (501-02 Front End Body Panels, Removal and Installation).

3. Remove the front side marker lamps.
For additional information, refer to: Front Side Marker Lamp (417-01 Exterior Lighting, Removal and Installation).

4. NOTE: Right-hand shown, left-hand similar.

Disconnect the front fog lamp electrical connector.

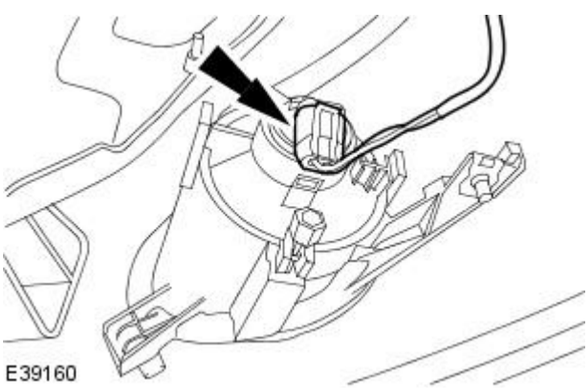

E39160

5. NOTE: Right-hand shown, left-hand similar.

Remove the front bumper cover retaining bolts.

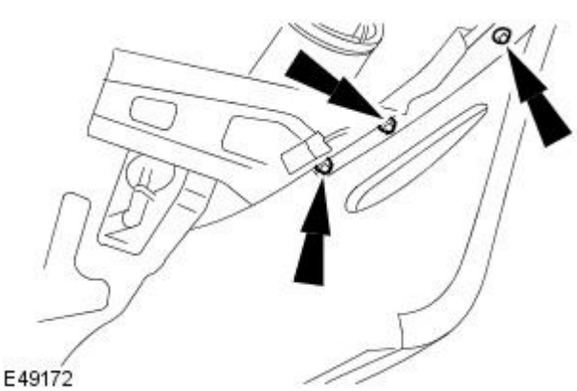

E49172

6. Remove the front bumper cover.

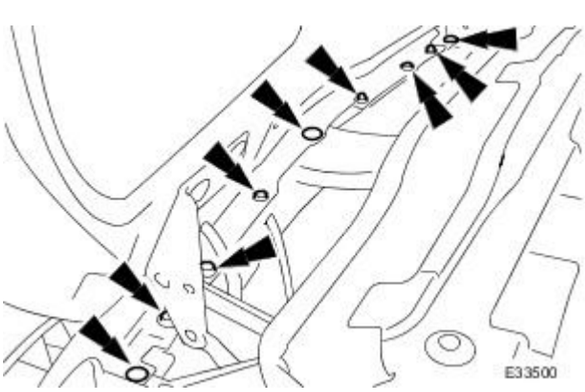

E33500

Installation

All vehicles

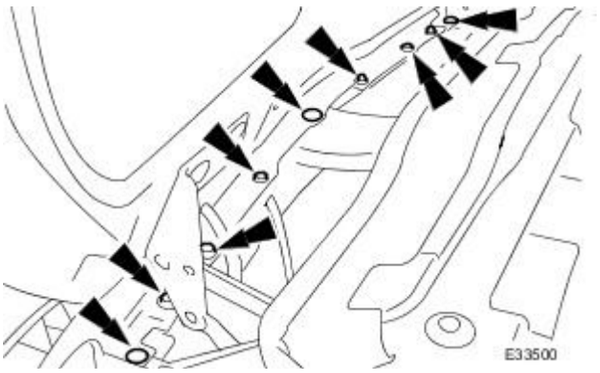

1. Install the front bumper cover.

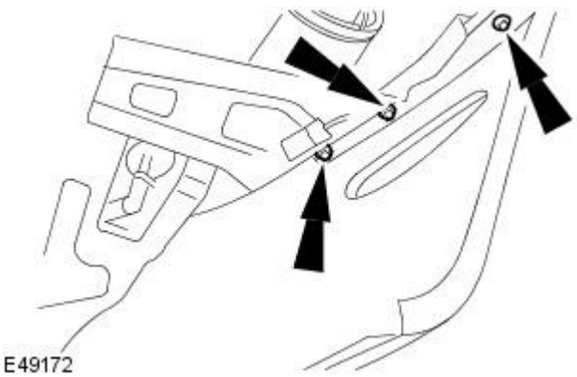

2. NOTE: Right-hand shown left-hand similar.

Install the front bumper cover retaining bolts.

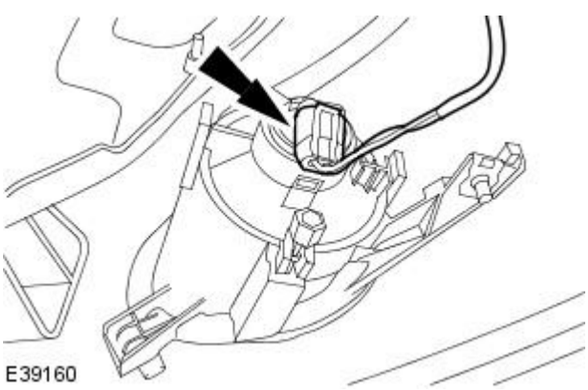

3. NOTE: Right-hand shown, left-hand similar.

Connect the front fog lamp electrical connector.

4. Install the front side marker lamps.
For additional information, refer to: Front Side Marker Lamp (417-01 Exterior Lighting, Removal and Installation).

5. Install the radiator splash shield.
For additional information, refer to: Radiator Splash Shield (501-02 Front End Body Panels, Removal and Installation).

Vehicles with supercharger

6. Install the radiator grill.

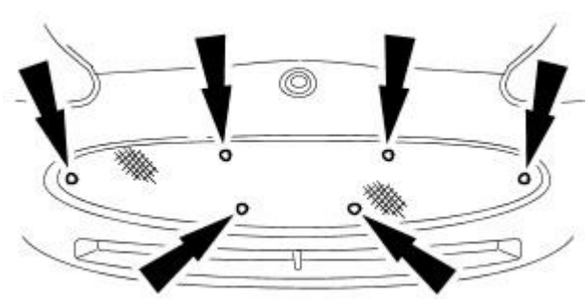

Bumpers - Front Bumper Isolator

Removal and Installation

Removal

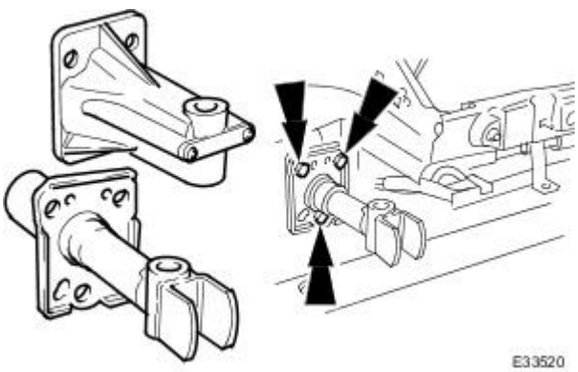

1. Remove battery cover and disconnect ground cable from battery terminal.
2. Raise front of vehicle to working height and support on stands.
3. Remove bumper cover. Refer to 76.22.28
4. Remove bumper splitter vane. Refer to 76.22.87.
5. Remove bumper beam. Refer to 76.22.26.
6. Slacken and remove three bolts securing strut to front lower cross-member and remove strut from vehicle.

Installation

1. Position strut on cross-member and fit and tighten securing bolts.
2. Fit bumper beam. Refer to 76.22.26.
3. Fit Splitter vane assembly. Refer to 76.22.87.
4. Fit bumper cover. Refer to 76.22.28
5. Check bumper to BIW clearances and adjust as necessary. Refer to Section 18.
6. Raise front of vehicle, remove stands and lower vehicle onto wheels.

Bumpers - Rear Bumper

Removal and Installation

Removal

1. Remove the rear bumper cover.
   For additional information, refer to: Rear Bumper Cover (501-19 Bumpers, Removal and Installation).
2. NOTE: Remove and discard the retaining rivets.

   Remove the rear bumper cover support brackets.

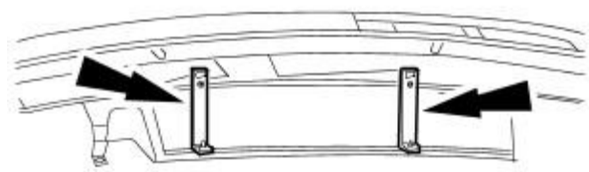

E49167

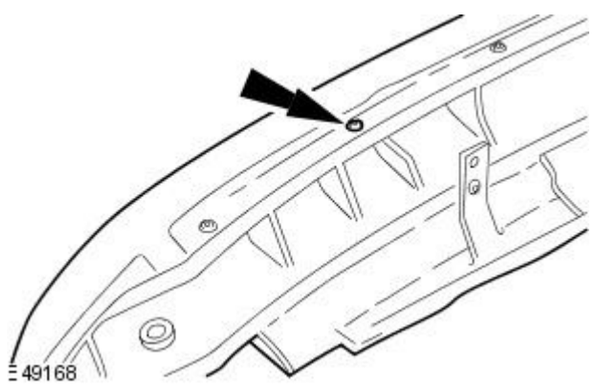

E49168

3. NOTE: Remove and discard the retaining rivets.

   Remove the rear bumper from the rear bumper cover.

Installation

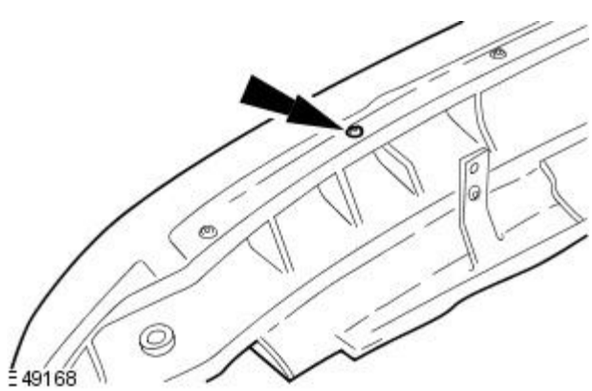

E49168

1. NOTE: Install new retaining rivets.

   Install the rear bumper to the rear bumper cover.

2. NOTE: Install new retaining rivets.

   Install the rear bumper cover support brackets.

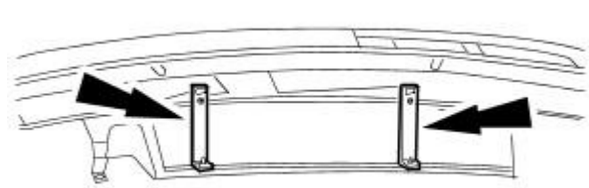

E49167

3. Install the rear bumper cover.
   For additional information, refer to: Rear Bumper Cover (501-19 Bumpers, Removal and Installation).

Bumpers - Rear Bumper Cover

Removal and Installation

Removal

All vehicles

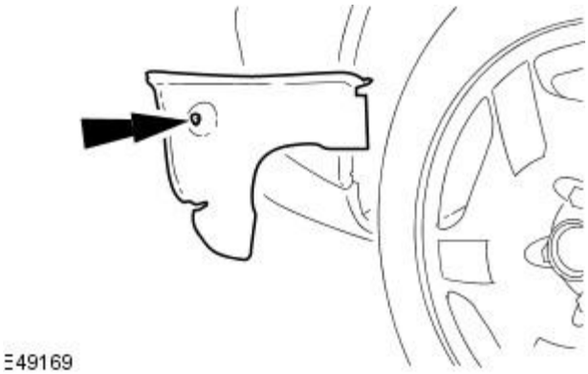

1. NOTE: Right-hand shown, left-hand similar.

   Remove the rear fender splash shield.

Vehicles built up to 01/2004

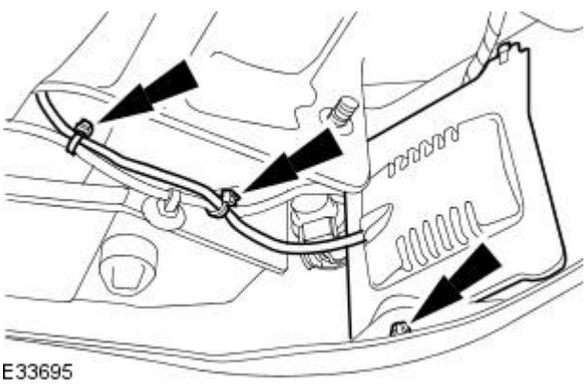

2. Detach the cellular phone antenna.

Vehicles built 02/2004 onwards

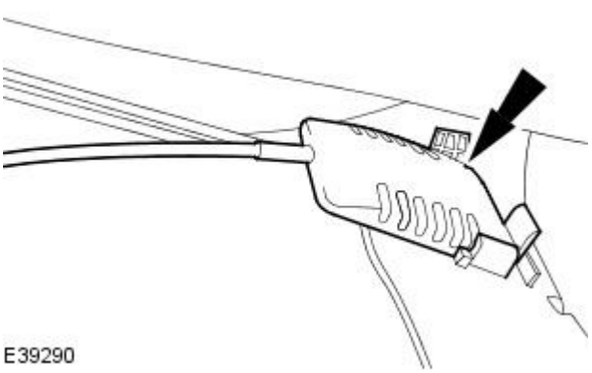

3. Detach the cellular phone antenna.

All vehicles

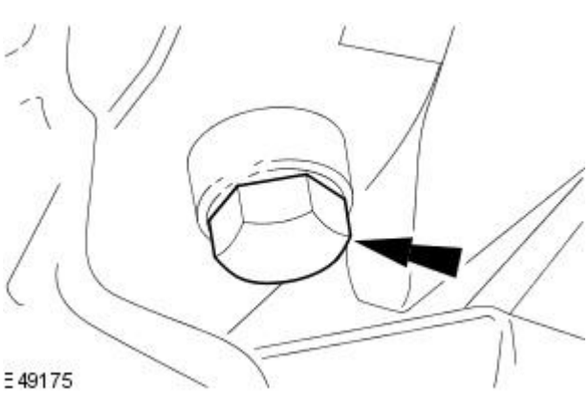

4. Disconnect the rear sidemarker lamp electrical connectors.
5. NOTE: Right-hand shown, left-hand similar.

   Detach the rear bumper cover.

   - Remove the retaining bolt.

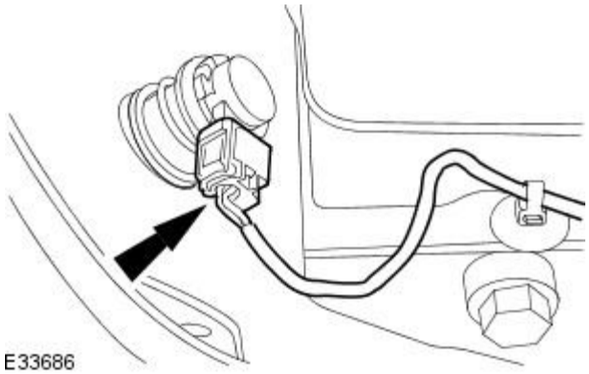

6. NOTE: One electrical connector shown, remaining electrical connectors similar.

Disconnect the rear parking aid sensor electrical connector.

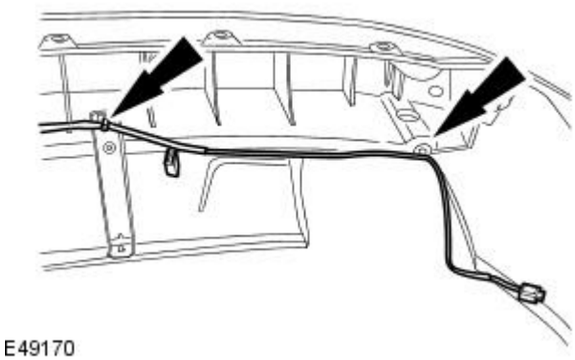

7. NOTE: Left-hand shown, right-hand similar

Detach the rear parking aid sensor wiring harness.

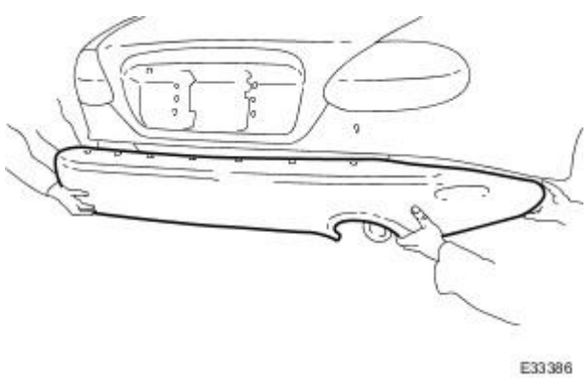

8. Remove the rear bumper cover.

Installation

All vehicles

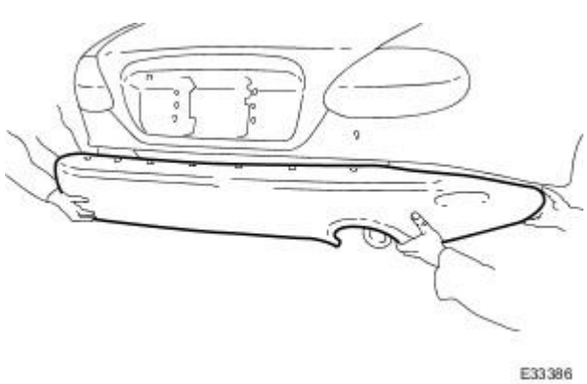

1. NOTE: Make sure the rear bumper cover aligns correctly to the sliding guides.

Install the rear bumper cover.

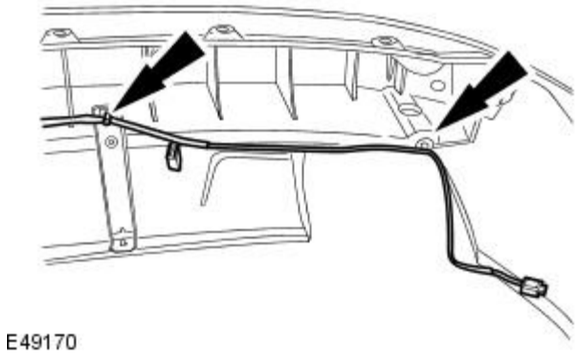

2. NOTE: Left-hand shown, right-hand similar

Attach the parking aid sensor wiring harness.

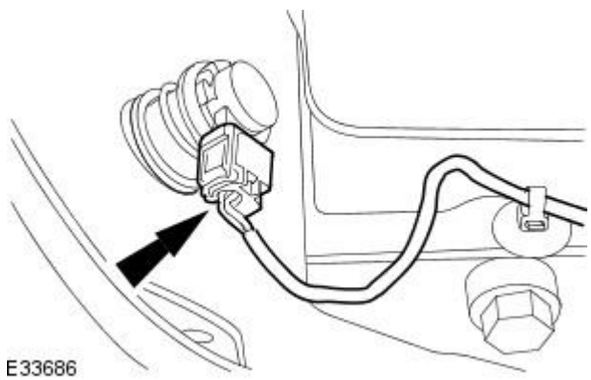

3. NOTE: One electrical connector shown, remaining electrical connectors similar.

Connect the parking aid sensor electrical connector.

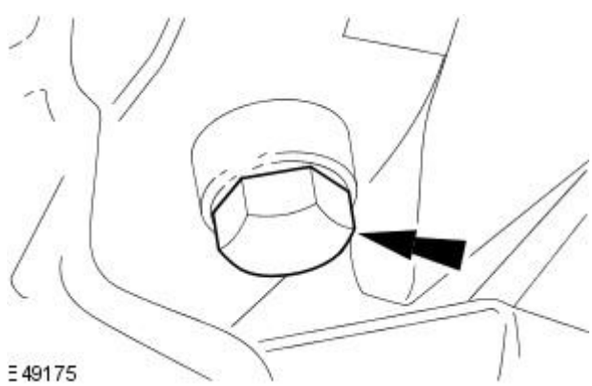

4. Install the bumper cover.

- Tighten to 45 Nm.

5. Connect the sidemarker lamp electrical connectors.

Vehicles built up to 01/2004

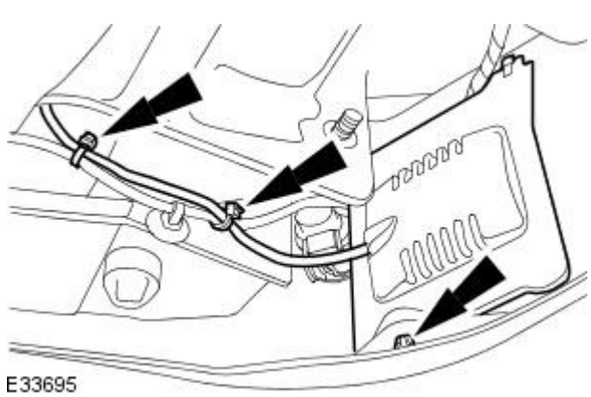

6. Attach the cellular phone antenna.

Vehicles built 02/2004 onwards

7. Attach the cellular phone antenna.

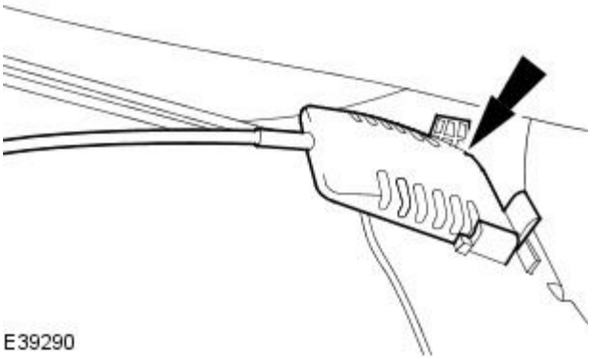

All vehicles

8. NOTE: Right-hand shown, left-hand similar.

Install the rear fender splash shield.

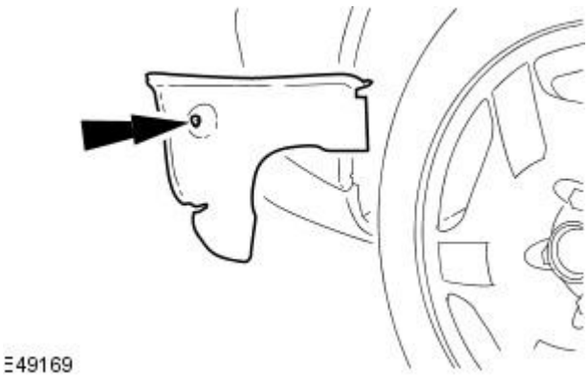

Bumpers - Rear Bumper Isolator

Removal and Installation

Removal

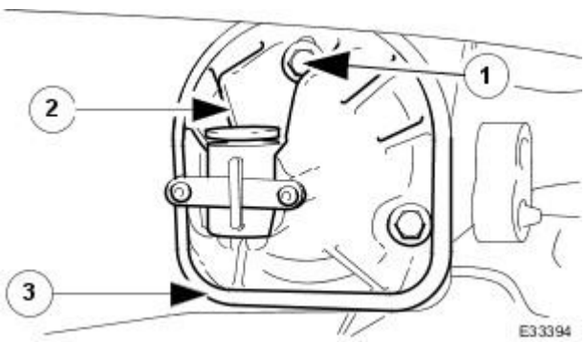

1. WARNING: THE REAR BUMPER IS CLOSE TO THE EXHAUST PIPES WHICH MAY BE HOT. CARE MUST THEREFORE BE EXERCISED WHEN WORKING IN THIS VICINITY.

Remove rear bumper cover and beam. Refer to 76.22.77 and 76.22.27.

2. Remove rear strut.

1. Slacken and remove rear strut securing bolts.
2. Remove strut from body rear panel.
3. Remove and discard strut gasket.
4. Remove height adjuster spacer.

Installation

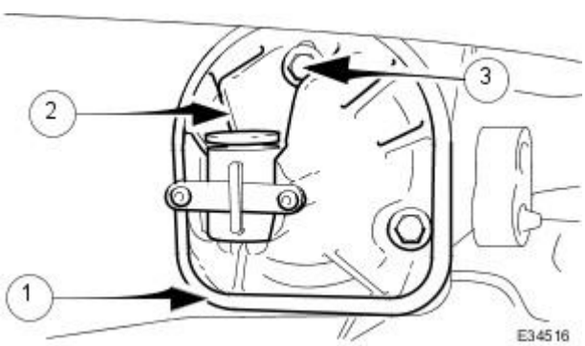

1. Fit rear strut.

1. Fit and align new strut gasket.
2. Position rear strut.
3. Fit and tighten strut securing bolts
4. Fit height adjuster spacer.

2. Fit rear bumper beam and cover. Refer to 76.22.27 and 76.22.77.

Safety Belt System -

Torque Specifications

Description	Nm	lb-ft	lb-in
Rear seat buckle	60 - 80	44 - 153	-
Coupe pillar loop nut	30 - 40	22 - 30	-
Webbing guide bracket	7 - 10	-	62 - 89
Rear seat belt inertia reel retaining bolt	34 - 46	25 - 34	-
Seat belt guide bracket retaining bolts	7 - 10	-	62 - 89
Front seat belt height adjuster retaining bolts	17 - 23	13 - 17	-
Front seat belt slider bar retaining bolt	34 - 46	25 - 34	-
Front seat belt retaining bolt	35	26	-
Front seat belt buckle retaining bolt	45	33	-

Safety Belt System - Safety Belt System

Description and Operation

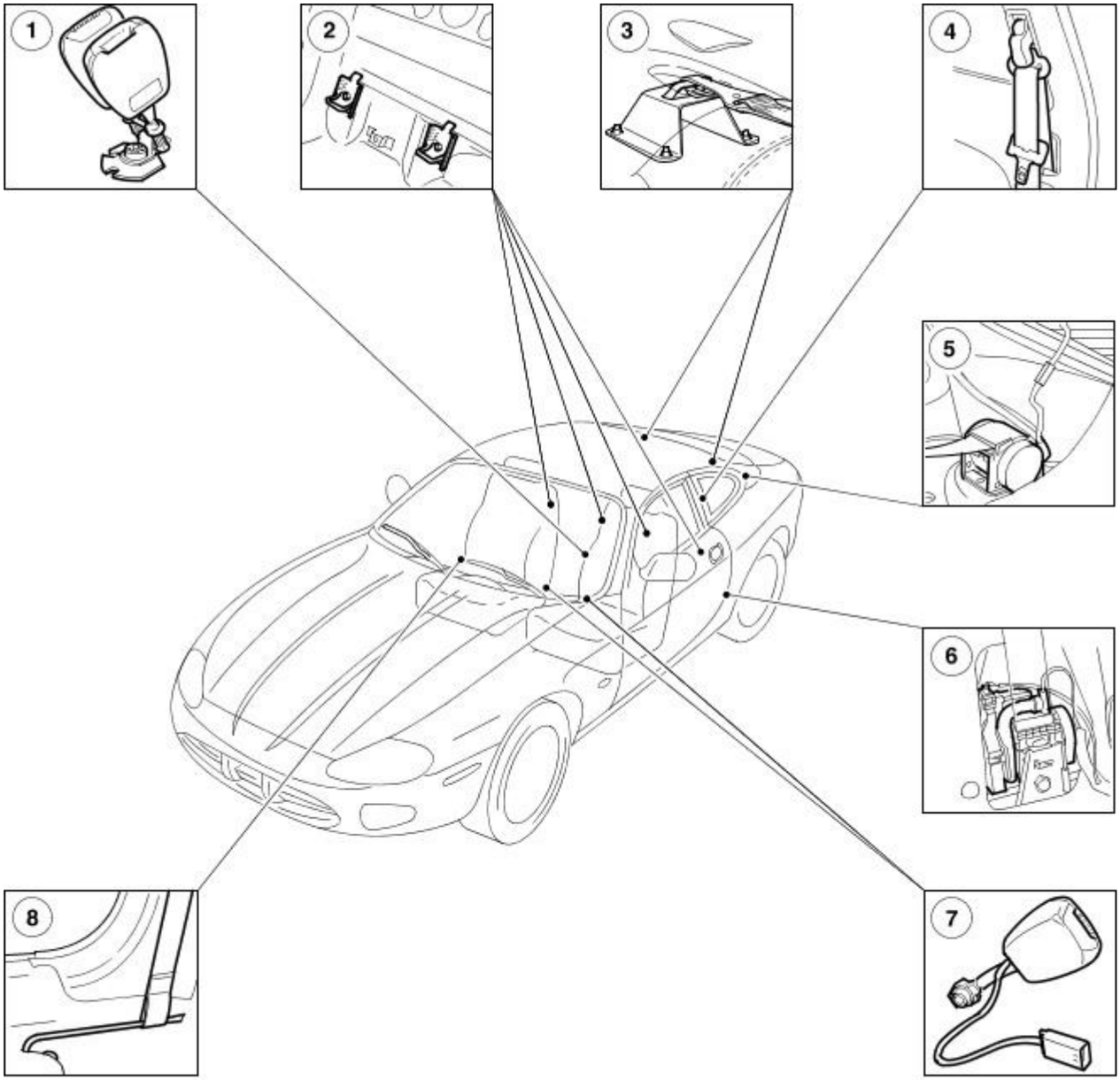

E33661

Item	Part Number	Description
1	—	Rear center seat belt buckle
2	—	Child seat lower international standards organization fix (ISOfix) anchors
3	—	Child seat upper anchor
4	—	Front seat belt upper anchor (coupe only)
5	—	Rear seat belt retractor
6	—	Front seat belt retractor and pretensioner
7	—	Front seat belt buckle
8	—	Front seat belt lower anchor

Front Seat Belts

WARNING: Prior to removal of the front seat belts and before disconnecting the front seat belt electrical connectors, the battery ground cable should be disconnected and a period of at least one minute allowed to elapse. The same amount of care should be taken when handling and storing the front seat belts, as would be taken when handling and storing air bag modules.

• NOTE: The front seat belts, which incorporate the seat belt retractors, pretensioners and the electrical comfort system, are supplied as an assembly and are not serviceable components.

The front seat belts are common to both coupe and convertible models and have three anchorage points. On both models, they are left and right-handed. Differing top fittings are selected and fitted as appropriate on installation. The coupe also has a manual, four position, seat belt shoulder height adjuster installed in each 'B' post.

Rear passenger entry and exit is aided by slider bar outboard lower mountings. The front seat belt buckles are secured to a moving inboard seat rail that enables the front seat to be moved without adjustment to the seat belt assembly. Visual and audible warnings operate if the driver seat belt tongue is not installed to the seat belt buckle when the driver seat is occupied and the ignition is switched to position I or II. The front seat belt buckles are fitted with sensors which form an integral part of the Air Bag Supplemental Restraint System (SRS). For additional information, refer toSection 501-20A Safety Belt SystemSection 501-20B Supplemental Restraint System.

The front seat belts are equipped with an electrical comfort system. Comfort system retraction applies when the seat belt tongue is

installed to the seat belt buckle, with the ignition on, and standard retraction applies when the seat belt tongue is not installed to the seat belt buckle.

Seat Belt Retractors and Pretensioners

• NOTE: The front seat belts, which incorporate the seat belt retractors, pretensioners and the electrical comfort system, are supplied as an assembly and are not serviceable components.

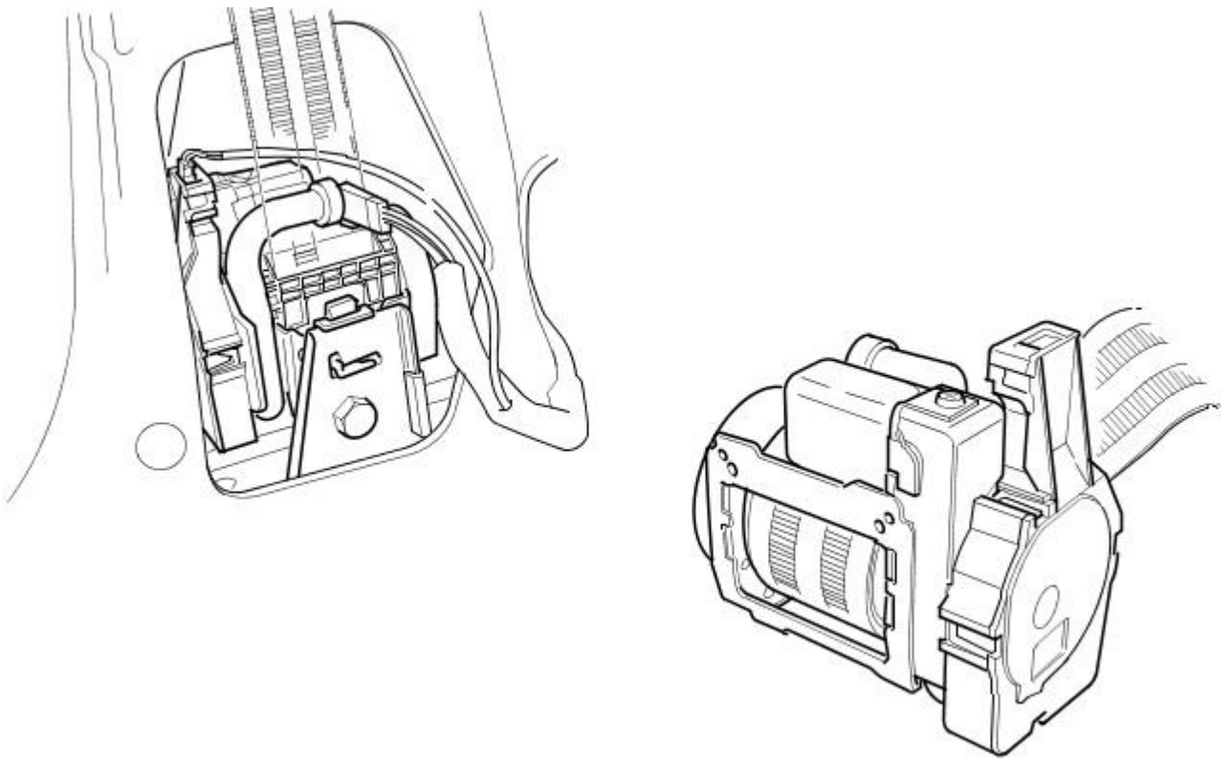

E33662

The front seat belt retractors incorporate ELR, which locks the seat belt retractor under rapid deceleration of the vehicle. At all other times the wearer is free to move the upper torso.

Each front seat belt incorporates a pretensioner device. In the event of low/high speed frontal impact, these provide additional occupant protection by removing any excess slack from the seat belts.

Seat belt pretensioning activates when a frontal impact of sufficient force occurs. Under such an impact, the restraints control module installed on the transmission tunnel generates a two ohms firing signal to each pretensioner. Receipt of this signal by each pretensioner directly triggers a pyrotechnic igniter unit. The resulting detonation propels a train of steel balls through a tube and directed onto an impeller mounted on the reel spindle. Rapid rotation of the impeller simultaneously rotates the seat belt reel, retracting any slack.

The seat belt retractors and pretensioners are not serviceable components and dismantling must not be attempted as unactivated pretensioning components contain a solid, flammable material. If a pretensioner is inadvertently damaged and ingestion or inhalation of the propellant occurs, first aid must be applied and medical advice sought.

The pretensioners provide standard emergency locking retraction (ELR) under rapid vehicle deceleration, and incorporate automatic locking retraction (ALR) on the passenger seats only, enabling child seats to be fully restrained by the seat belt.

Electrical Comfort System

• NOTE: The front seat belts, which incorporate the seat belt retractors, pretensioners and the electrical comfort system, are supplied as an assembly and are not serviceable components.

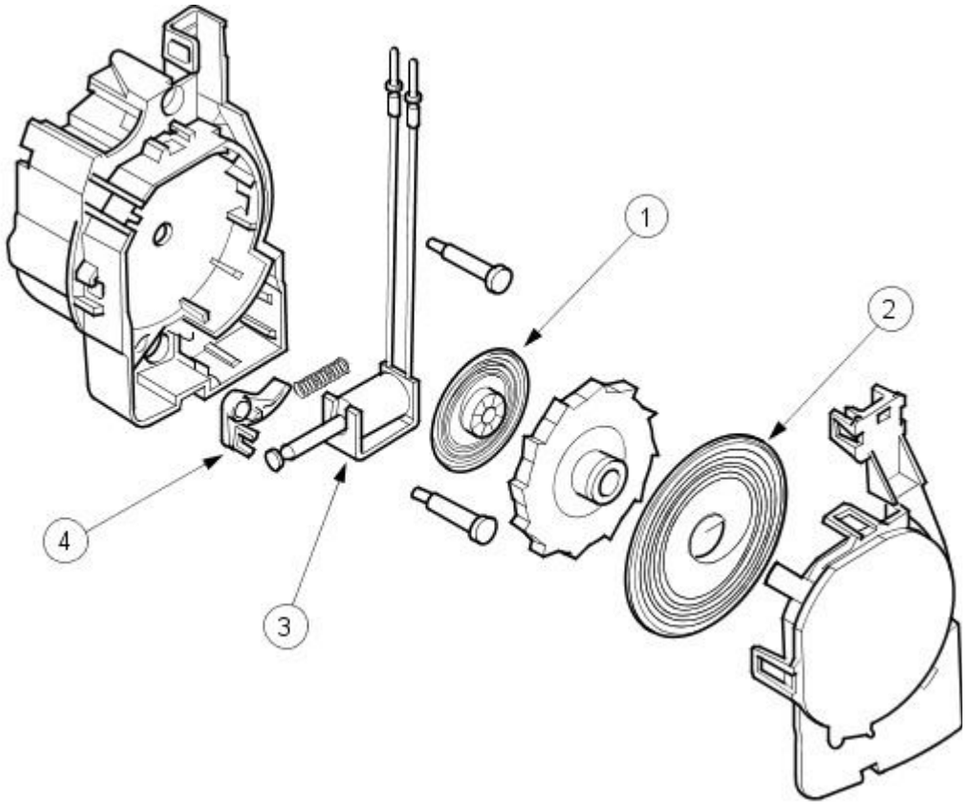

E33663

Item	Part Number	Description
1	—	Comfort spring
2	—	Retraction spring
3	—	Comfort solenoid
4	—	Comfort switch

The electrical comfort system reduces the force exerted on the occupant by the seat belt webbing under normal driving conditions. The comfort system utilizes a mechanism in the seat belt retractor to keep the seat belt webbing force at a controlled and pre-defined level.

The seat belt on initial extraction of the seat belt webbing, is controlled by the retraction spring. Whenever the seat belt tongue is installed to the seat belt buckle, with the ignition on, the comfort solenoid actuates the comfort switch causing the comfort spring to lower the force exerted on the occupant. During the period that the seat belt tongue remains installed, the comfort system is in operation, reducing the force exerted on the occupant by the seat belt webbing. When the seat belt tongue is removed from the seat belt buckle, the comfort solenoid disengages the comfort spring, re-engages the retraction spring and causes the force on the seat belt webbing to immediately revert to the higher retraction load.

Rear Seat Belts

• NOTE: The rear seat belts, which incorporate the seat belt retractors, are supplied as an assembly and are not serviceable components.

The rear seat belts are not common to both coupe and convertible models but both have three anchorage points with emergency locking retraction (ELR) and automatic locking retractors (ALR). The seat belt buckles, common to both models, are mounted on twin cables and share a single central floor anchorage. The seat belt buckle cables exit the rear seat cushion through a tailored aperture concealed by a matching gaiter.

Coupe seat belt retractors are mounted on the outboard sides of the parcel shelf, with the seat belt webbing exiting through color keyed escutcheons in the rear quarter casings. Convertible seat belt retractors are mounted on the rear seat pan behind the rear seat squab. Seat belt webbing is routed upwards behind the seat squab and exits through color keyed escutcheons surmounting the rear seat squab. The lower anchorage points, located on outboard sides of the rear seat pan, are common to both models. The rear seat belt retractors incorporate ELR, which locks the seat belt retractor under rapid deceleration of the vehicle. At all other times the wearer is free to move the upper torso.

ALR enables a child seat to be secured by any passenger seat belt. When adjusted with all slack removed, ALR locks, preventing further seat belt extraction. Unclipping of the seat belt buckle allows the seat belt to return to the normal stowed position and revert to ELR operation. The rear seats are also equipped with child seat anchorage points located on the vehicle body, suitable fro child seats that are ISOfix compatible.

Seat Belt Retractors — Coupe Vehicles

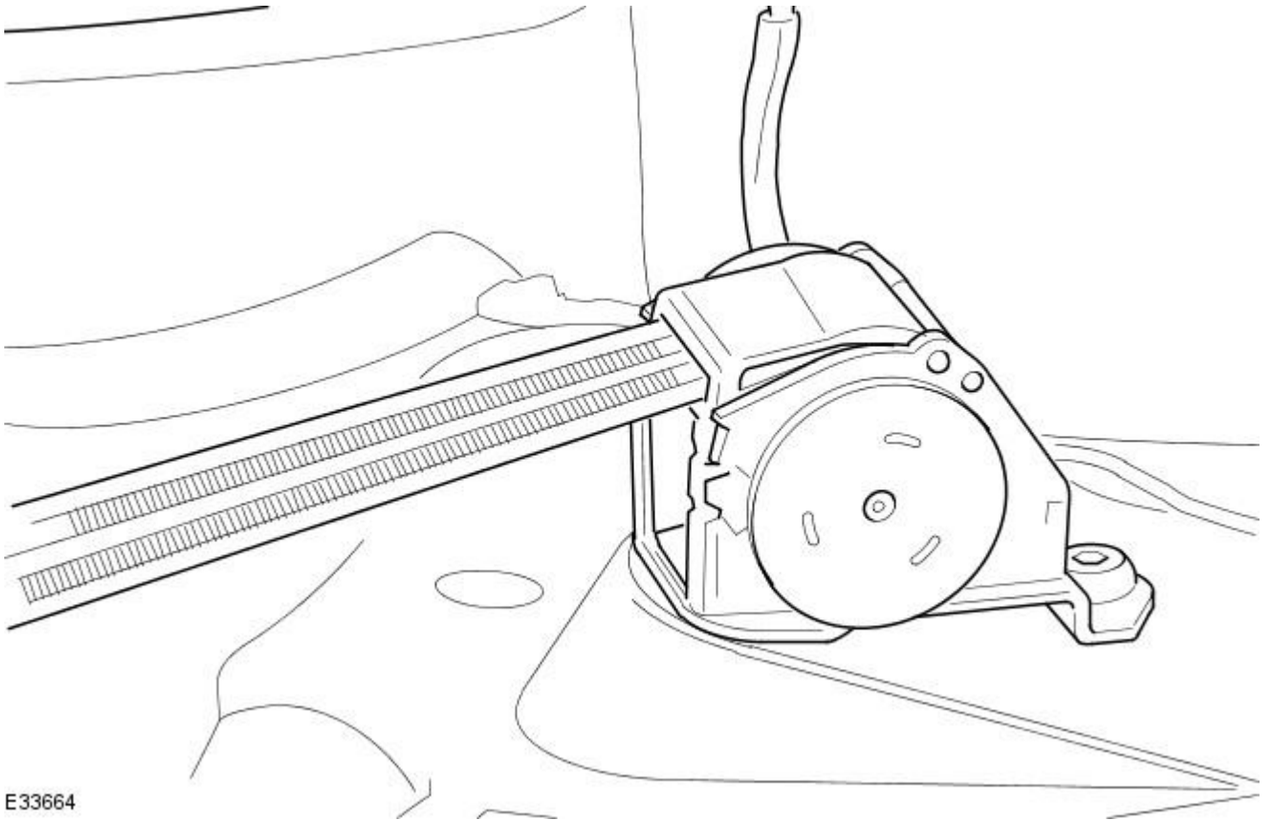

Seat Belt Retractors — Convertible Vehicles

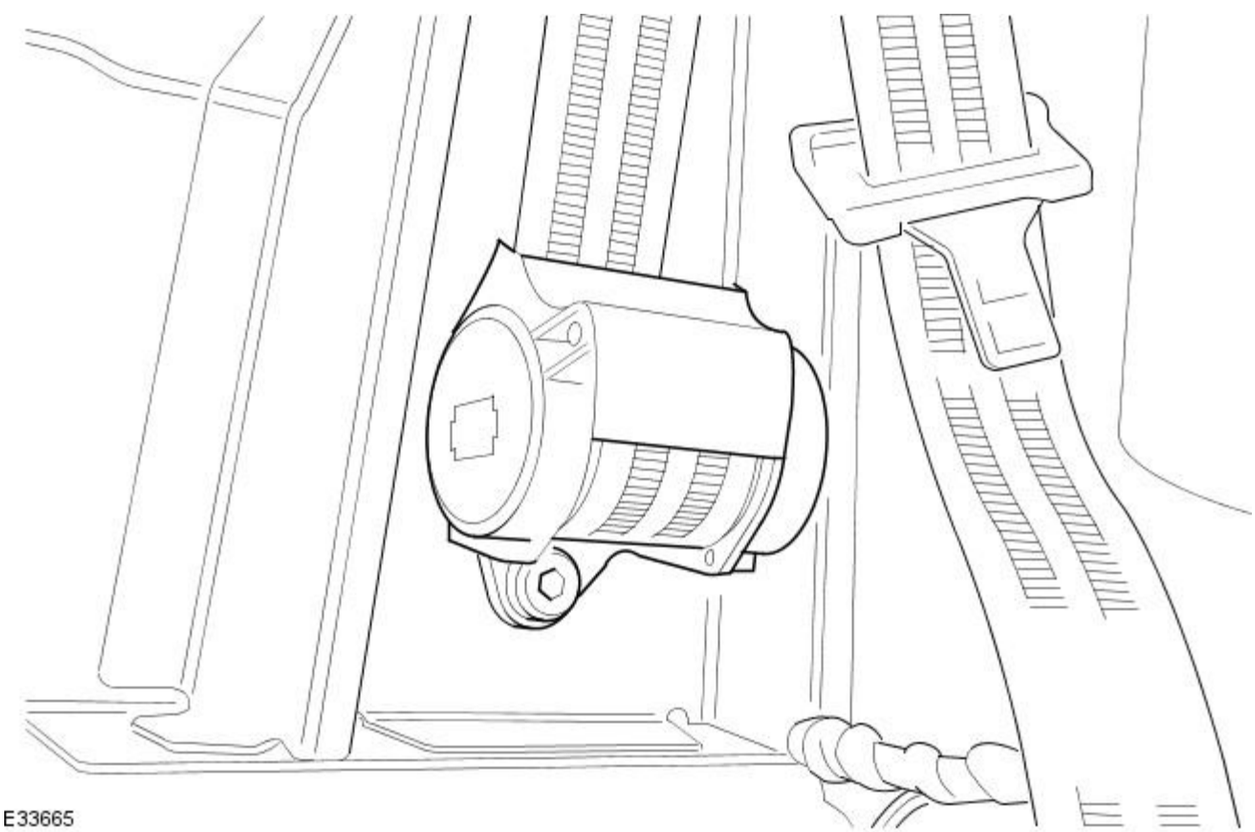

Child Seat Anchorage

• NOTE: Care must be taken not to damage or scratch the child seat anchors and they must be serviced by replacement only.

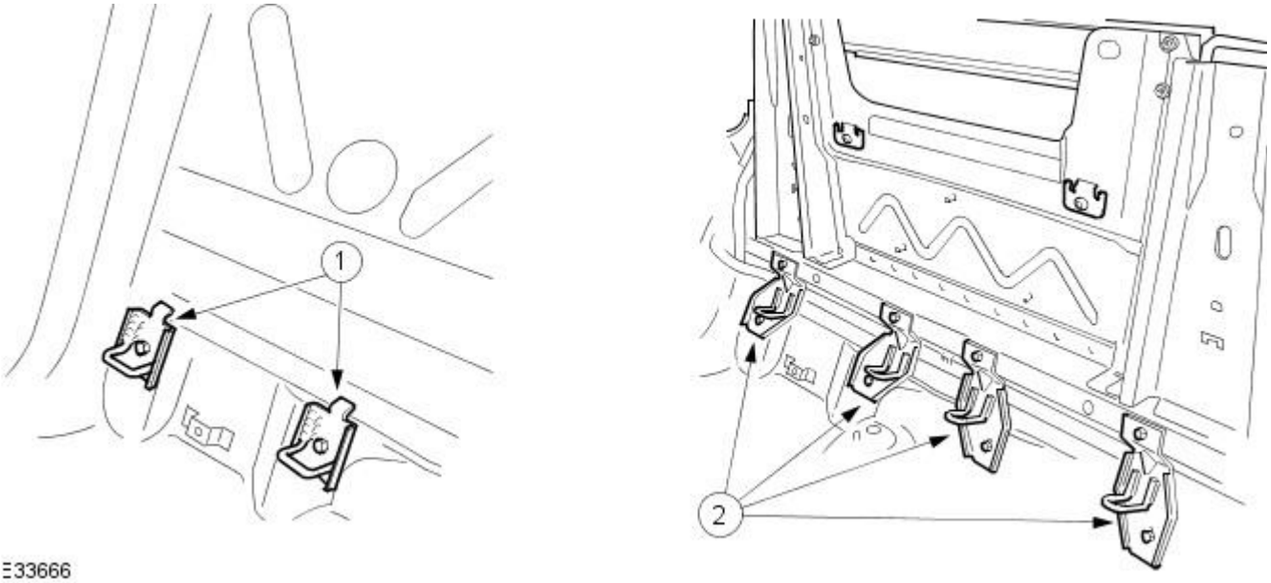

Item	Part Number	Description
1	—	Child seat lower anchors — coupe
2	—	Child seat lower anchors — convertible

The ISOfix standardized child seat anchorage system is a universal system, which allows the child seat to be secured directly and easily to the vehicle body without the use of adult seat belts. Depending on the market, the ISOfix system will be either fitted as standard, or fitted by the dealer if ordered as an accessory.

For bothrear seat outboard position, the ISOfix system uses two lower anchors bolted to the vehicle body in the seat bite line area. The lower anchors are accessible through the gap between the rear seat backrest and rear seat cushion. To ensure universal compatibility, the size, position and orientation of the lower anchors are controlled by an International Standards Organization (ISO) standard specification.

Upper anchors, which are usually used in conjunction with the lower anchors to secure the child seat, are fitted as standard to vehicles in both Australian and North American markets. In other markets, if the lower anchors are supplied as an accessory the upper anchors will also be supplied in the accessory kit.

The child seat, which must be designed to ISOfix specification, is clipped onto the anchors by either rigid extendible rails or flexible tether straps. A quick release mechanism is incorporated to allow easy removal of the child seat.

Published: 11-May-2011

Safety Belt System - Safety Belt System

Diagnosis and Testing

With the increase in complexity of electronic modules and the multiplexed communication network, the general use of electrical test equipment is no longer practical. The approved Jaguar diagnostic equipment should be used in the diagnosis and testing of occupant restraint system functions.

For detailed instructions on the diagnosis and testing of these functions, refer to the approved Jaguar diagnostic equipment user guide.

Safety Belt System - Front Safety Belt

Removal and Installation

Removal

1. Disconnect the battery ground cable. For additional information, refer to: Battery Ground Cable (414-01 Battery, Mounting and Cables, Removal and Installation).
2. Remove the rear quarter upper trim panel. For additional information, refer to: Rear Quarter Upper Trim Panel - Convertible (501-05 Interior Trim and Ornamentation, Removal and Installation).
3. Release the front safety belt
   - Remove the bolt.
   - Slide the safety belt forward and unhook from the mounting bar.

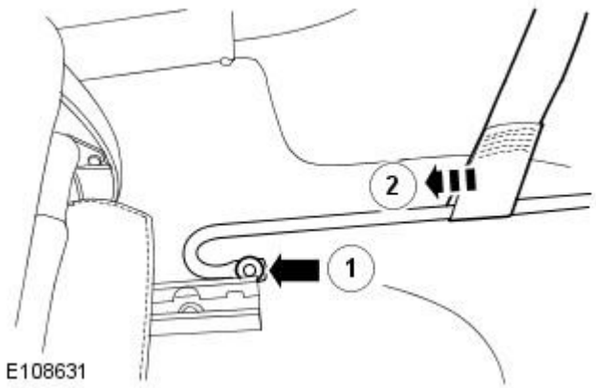

4. Detach the front safety belt guide bracket.

5. Detach the front safety belt.

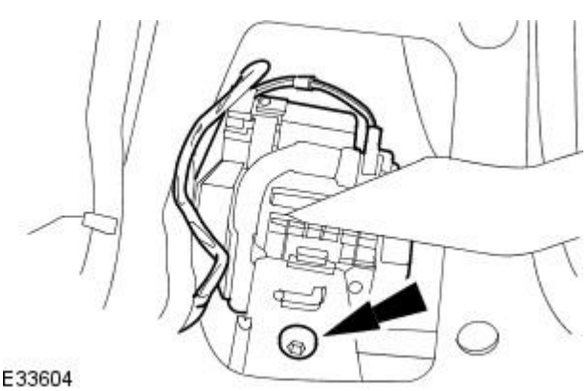

6. Remove and discard the front safety belt wiring harness retaining strap.

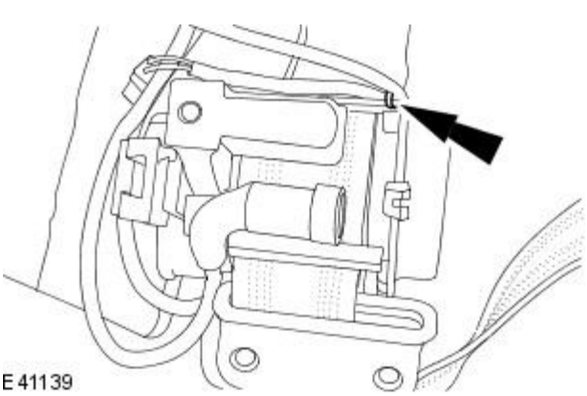

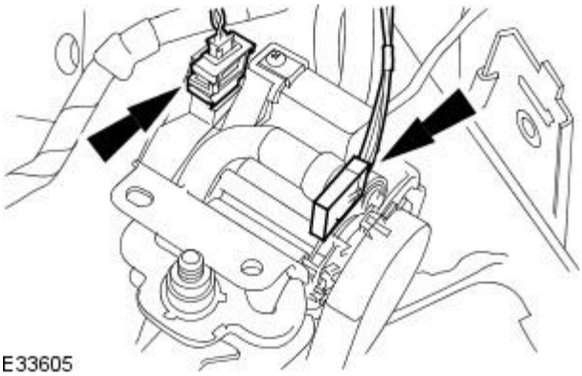

7. Remove the front safety belt.

- Disconnect the seat belt electrical connectors.

Installation

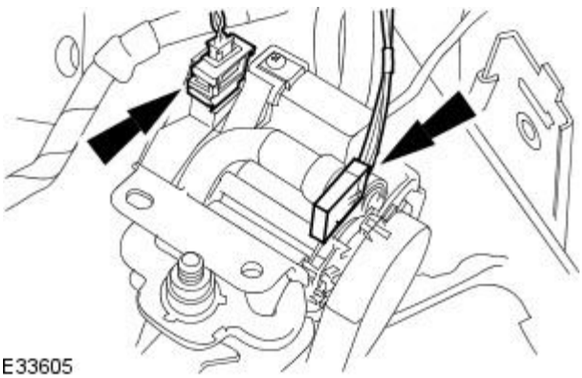

1. Install the front safety belt.

- Connect the seat belt electrical connectors.

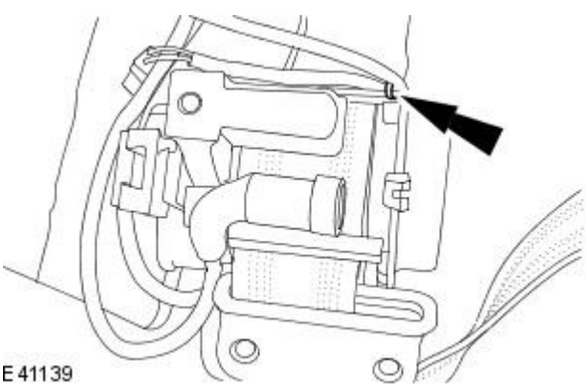

2. Install a new front safety belt wiring harness retaining strap.

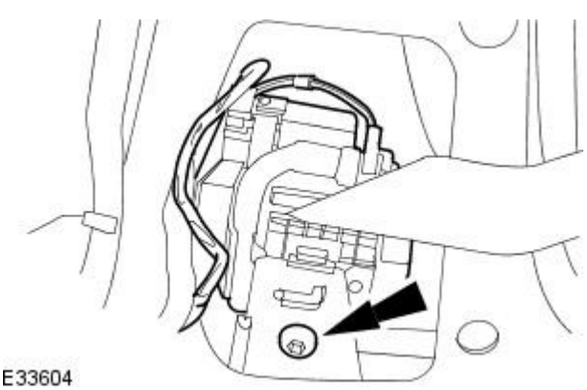

3. Attach the front safety belt.

- Tighten the bolt to 35 Nm.

4. Attach the front safety belt guide bracket.

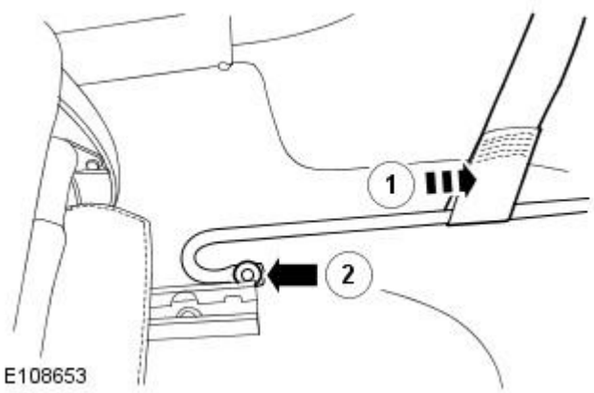

5. Attach the front safety belt.

- Slide the front safety belt onto the mounting bar.
- Tighten the bolt to 40 Nm.

6. Install the rear quarter upper trim panel. For additional information, refer to: Rear Quarter Upper Trim Panel - Convertible (501-05 Interior Trim and Ornamentation, Removal and Installation).

7. Connect the battery ground cable. For additional information, refer to: Battery Ground Cable (414-01 Battery, Mounting and Cables, Removal and Installation).

Safety Belt System - Front Safety Belt Buckle

Removal and Installation

Removal

1. Remove the front seat. For additional information, refer toSection 501-10 Seating.
2. Reposition the seat belt buckle gaiter.

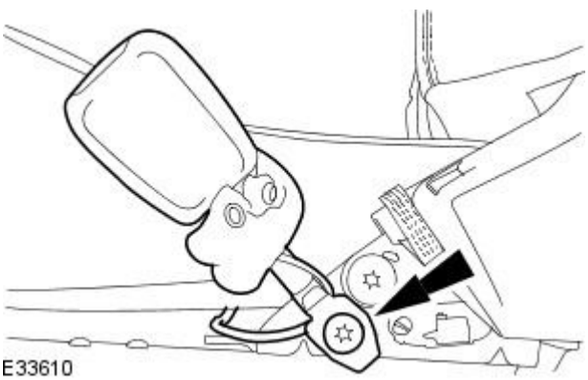

3. Detach the seat belt buckle.

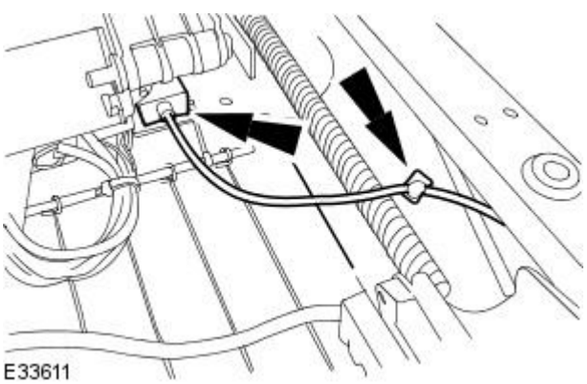

4. Invert the seat.
5. Remove the seat belt buckle.
   - Remove the fir tree clip.
   - Disconnect the electrical connector.

Installation

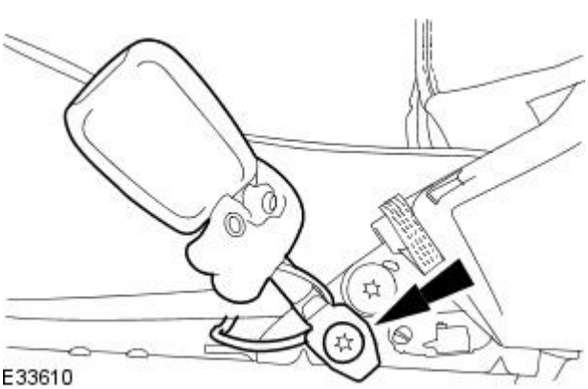

1. To install, reverse the removal procedure.
   - Tighten to 45Nm.

Safety Belt System - Rear Safety Belt Retractor2-Door

Removal and Installation

Removal

1. Remove the rear seat backrest.
   For additional information, refer to Section 501-10 Seating.
2. Remove the coat hanger hook.
3. Detach and position rear quarter trim panel for access.
   For additional information, refer to Section 501-05 Interior Trim and Ornamentation.
4. Slacken and remove seat belt lower anchor plate to seat pan securing bolt.

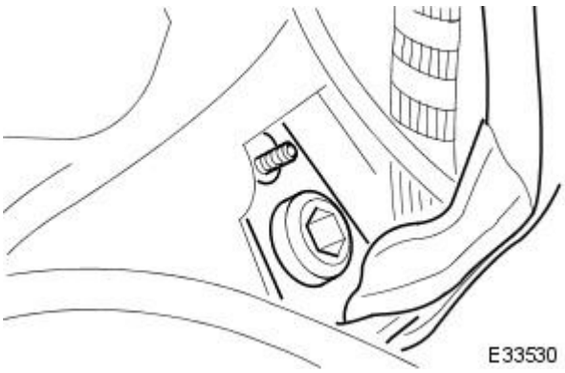

5. Pass the rear saftey belt through the rear quarter trim panel.
   1. Remove the rear quarter trim panel escutcheon.
   2. Pass the rear saftey belt through the rear quarter trim panel.

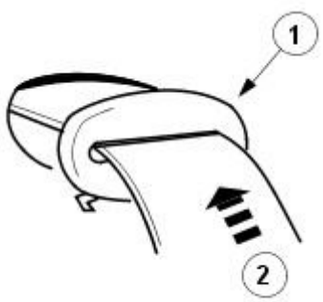

E41137

6. Slacken and remove inertia reel to parcel shelf panel securing bolt and remove belt and inertia reel assembly from vehicle.

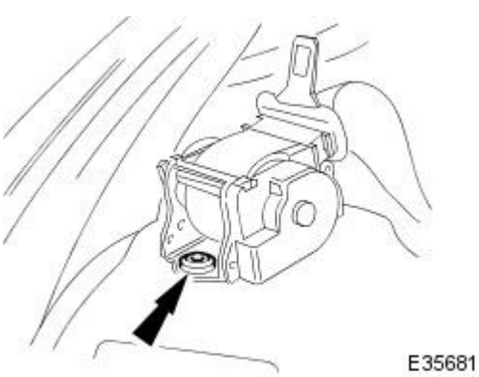

Installation

1. Fit inertia reel assembly.
   - Position inertia reel on parcel shelf panel ensuring that dowel locates correctly in reel housing.
   - Fit and tighten inertia reel to panel securing bolt.

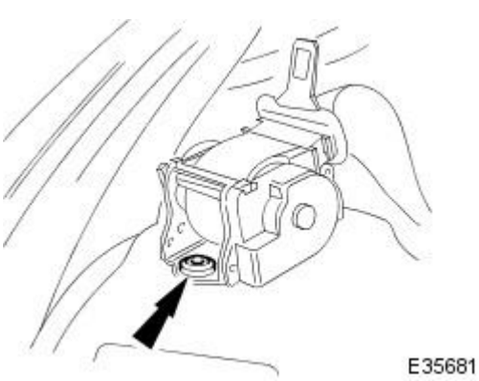

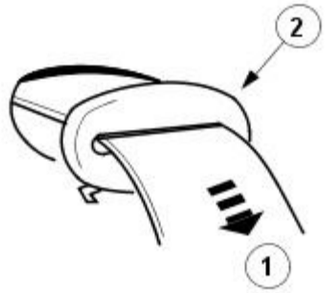

E41138

2. Install the rear quarter trim panel escutcheon.

1. Pass the rear saftey belt through the rear quarter trim panel.
2. Install the rear quarter trim panel escutcheon.

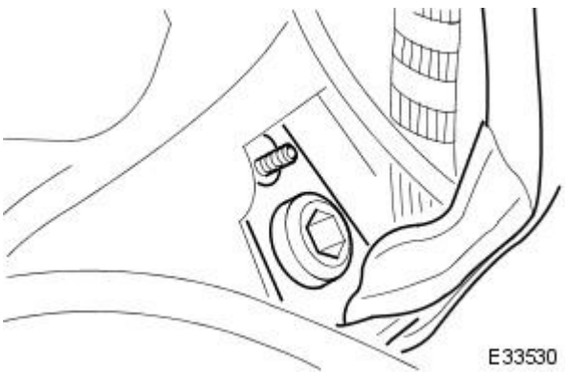

3. Secure belt lower anchor plate.

- Moving rear quarter casing for access, position belt lower anchor plate at seat pan location.
- Fit securing bolt to anchor plate, place card washer and spacer on bolt.
- Fit and tighten bolt securing belt anchor plate in seat pan location ensuring dowel locates in slot.

4. Attach and position rear quarter trim panel for access.
For additional information, refer to Section 501-05 Interior Trim and Ornamentation.

5. Fit coat hanger hook.

6. Install the rear seat backrest.
For additional information, refer to Section 501-10 Seating.

Safety Belt System - Rear Safety Belt RetractorConvertible

Removal and Installation

Removal

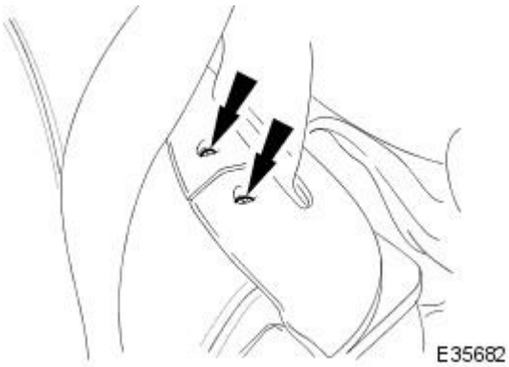

1. Remove rear seat cushion. Refer to 76.70.37.
2. Release belt from seat squab.
   - Slacken and remove two screws securing seat belt escutcheon to top of seat squab.
   - Pass belt through gap in escutcheon and retain escutcheon.

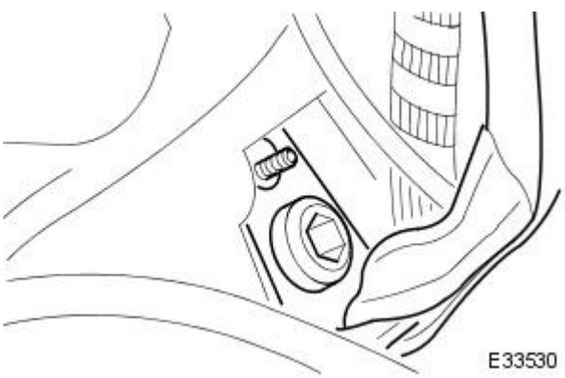

3. Remove rear seat squab for access. Refer to 76.70.38.
4. Slacken and remove seat belt lower anchor plate to seat pan securing bolt.

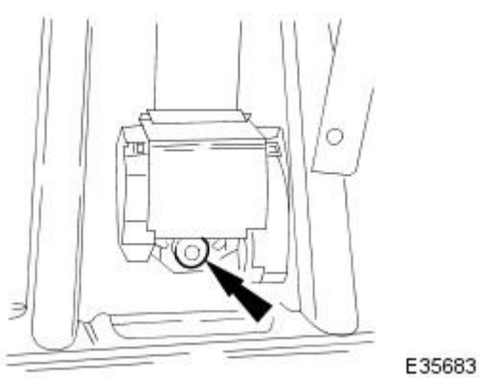

5. Slacken and remove seat belt inertia reel to squab panel securing bolt.

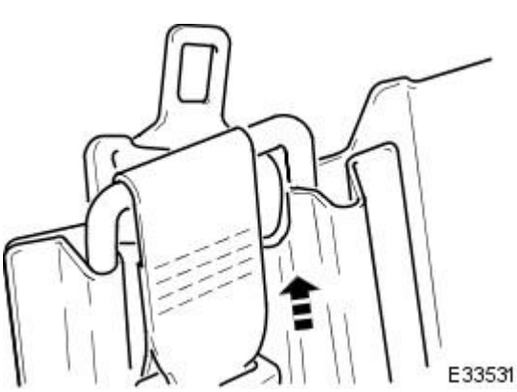

6. Pass seat belt lower anchor plate and tongue over belt guide on squab panel and remove belt and inertia reel from vehicle.

Installation

1. Position inertia reel at seat squab panel anchorage point, ensuring that dowel correctly locates in reel housing.
2. Fit and tighten inertia reel to seat squab panel securing bolt.
3. Route seat belt lower anchor plate and tongue up belt tower and over guide.
4. Fit rear seat squab. Refer to 76.70.38.

5. Fit escutcheon over belt, position at top of squab and fit and tighten two securing screws.
6. Fit seat belt lower anchor.
   - Fit securing bolt to seat belt lower anchor plate and fit card washer and spacer to bolt.
   - Ensuring belt is not twisted, fit and tighten belt anchor plate to seat pan securing bolt ensuring dowel locates in slot.
7. Fit rear seat cushion. Refer to 76.70.37.

Supplemental Restraint System -

Torque Specifications

Description	Nm	lb-ft	lb-in
Air bag control module bracket retaining bolts	6	-	53
Air bag control module retaining bolts	2	-	18
Crash sensor retaining nut	12	9	-
Driver air bag module retaining bolts	12	9	-
Passenger air bag module finish panel retaining bolts	9	-	80
Passenger air bag module retaining nuts	9	-	80
Passenger air bag module retaining bolts	9	-	80
Passenger air bag module finish panel mounting bracket retaining bolts	3	-	27
Restraints control module (RCM) retaining nuts	12	9	-
Side air bag module retaining nuts	7	-	62
Side impact sensor retaining bolt	12	9	-
Seat base retaining nuts	18	13	-

Supplemental Restraint System - Air Bag Supplemental Restraint System (SRS)

Description and Operation

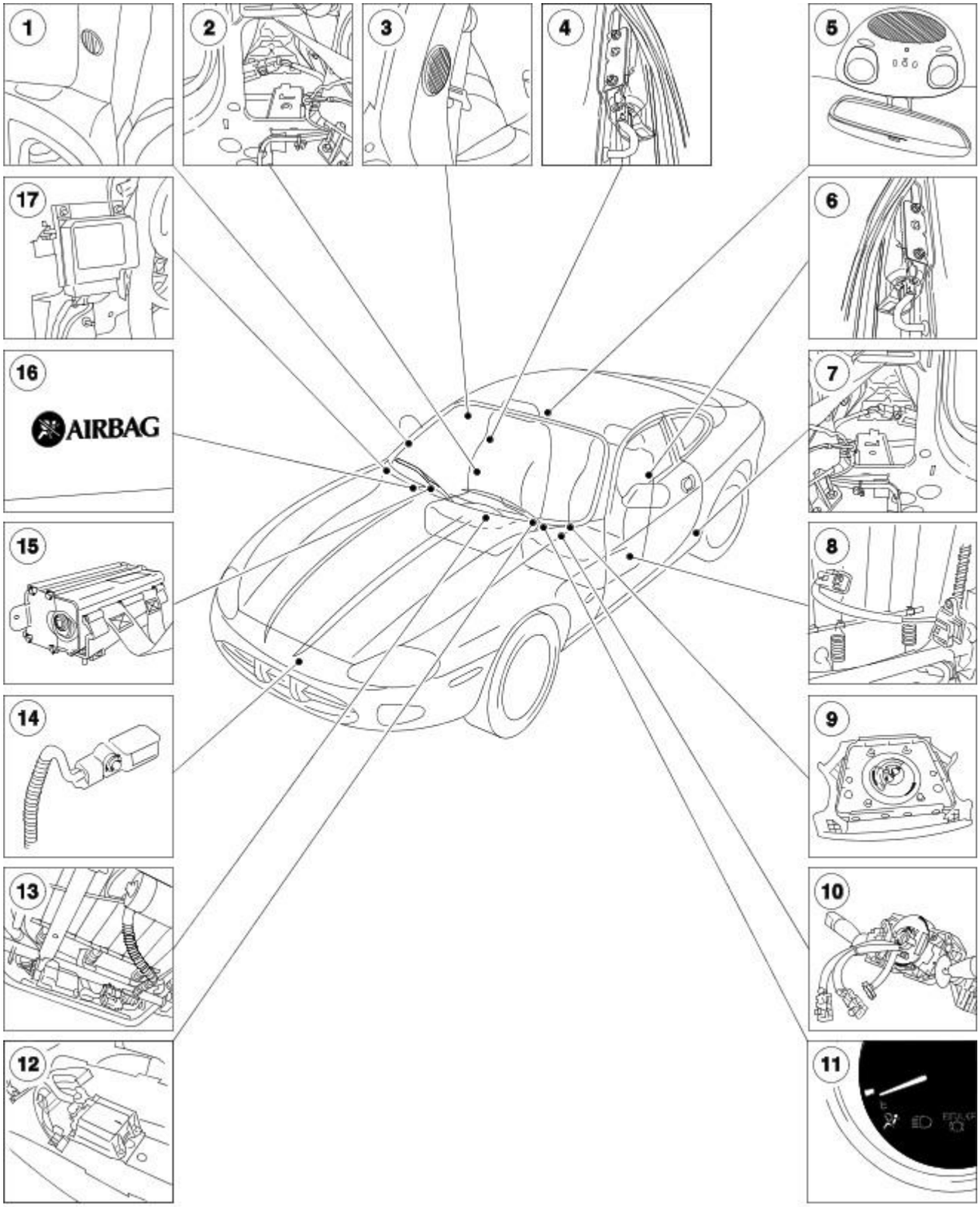

E33667

Item	Part Number	Description
1	—	A-Pillar occupancy sensor
2	—	Side impact sensor
3	—	B-Pillar occupancy sensor
4	—	Side air bag module
5	—	Overhead console occupancy sensors
6	—	Side air bag module
7	—	Side impact sensor
8	—	Driver seat track position sensor
9	—	Driver air bag module
10	—	Clock spring
11	—	Air bag supplemental restraint system (SRS) indicator
12	—	Restraint control module (RCM)
13	—	Front passenger seat occupant classification sensing system
14	—	Front crash sensor

15	—	Passenger air bag module
16	—	Passenger air bag deactivation (PAD) indicator
17	—	Air bag control module

WARNING: Prior to removal of any supplemental restraint system (SRS) components and before disconnecting any SRS electrical connectors, the battery ground cable should be disconnected and a period of at least one minute allowed to elapse. Care should be taken when handling and storing air bag modules.

The SRS provides an additional level of frontal crash protection for front seat occupants. The system analyzes the occupancy scenario and crash severity before activating the appropriate safety devices to help protect a range of occupants in a variety of frontal crash situations. The system will only be activated when the ignition switch is in position II or III.

The system optimizes deployment of its components, therefore reducing the potential for air bag induced injuries, passenger air bag module deployments (particularly when the passenger front seat is unoccupied), driver air bag module deployments and side air bag module deployments.

Sensors

WARNING: Prior to removal of any SRS sensors and before disconnecting any SRS sensor electrical connectors, the battery ground cable should be disconnected and a period of at least one minute allowed to elapse.

• NOTE: The SRS sensors do not contain any serviceable components.

The SRS consists of the following sensors:

Occupancy Sensors

The occupancy sensor locations are identical for both the coupe and convertible, except that since the convertible has no B-pillar the equivalent sensor is mounted in the rear quarter trim capping. The four sensors are strategically placed to detect the presence and movement of the passenger front seat occupant.

The occupancy sensor system uses ultrasound at an operating frequency of 40 kHz to monitor passenger front seat occupancy. The SRS uses four ultrasonic sensors, one at the A-pillar, one at the B-pillar and two in the overhead console. The sensors determine the presence and position of the passenger front seat occupant with respect to the passenger air bag module finish panel. The sensors determine air bag module deployment decisions by classifying occupants as either 'in position' or 'out of position'. The sensors are part of a system that is sophisticated enough to be unaffected by body extremities (hands and feet) and respond only to head or body movements.

Obstruction of any sensor for an extended period of time, or repeated key cycles will cause the system to log a 'blocked' code and will illuminate the SRS indicator. Subsequent clearance of the obstruction will reinstate the SRS indicator, but the code will remain logged.

Side Impact Sensors

The side impact sensors are mounted on a bracket attached to the vehicle body, behind each front safety belt retractor. They consist of processing circuits and an accelerometer. They do not make deployment decisions.

Seat Position Sensor

The seat position sensor is a 'hall effect' type sensor and is mounted on the underside of the driver seat. It is actuated by a steel blade that is attached to the seat slide. The magnetic field disturbance caused, when the steel blade passes through the sensor, creates an output signal for the RCM. On receipt of this signal, which indicates when the seat is forward of a defined point in its travel, the RCM disables the second stage output of the driver air bag module. Malfunction of the sensor or associated circuits will cause the SRS indicator to illuminate.

Front Passenger Seat Occupant Classification Sensing System

• NOTE: The front passenger seat occupant classification sensing system does not contain any serviceable components.

Individual components of the front passenger seat occupant classification sensing system are not serviceable. The system must be replaced as a complete unit and due to its sophistication, each replacement system requires calibration, so to avoid the need to provide calibration equipment to each dealer, a pre-calibrated service kit is available. The following components are combined and calibrated during manufacture to form the front passenger seat occupant classification sensing system:

- Front passenger seat cushion
- Silicone filled bladder
- Front passenger seat occupant classification sensor control module
- Front passenger seat occupant classification sensor

The front passenger seat occupant classification sensor control module is mounted under the passenger front seat. The silicone filled bladder is integrated into the seat cushion and the front passenger seat occupant classification sensor, which is attached to the bladder, is mounted under the seat.

The silicone filled bladder responds to weight changes on the passenger front seat. The front passenger seat occupant classification sensor responds to these pressure changes and provides an appropriate signal to the front passenger seat occupant classification sensor control module. The front passenger seat occupant classification sensor control module processes the input signal received from the front passenger seat occupant classification sensor and makes it available to the RCM via the controller area network (CAN). In addition, the front passenger seat occupant classification sensor control module performs self-diagnostic functions on the system, with any malfunctions being notified to the RCM accordingly.

The front passenger seat occupant classification sensing system responds to the occupancy of the passenger front seat in accordance with the following:

- Passenger front seat status 'EMPTY' — Passenger air bag module status 'OFF' — Passenger air bag deactivation (PAD) indicator indicator 'OFF'
- Passenger front seat status 'OCCUPIED' (small occupant) — Passenger air bag status 'OFF' — PAD indicator 'ON'
- Passenger front seat status 'OCCUPIED' (large occupant) — Passenger air bag status 'ON' — PAD indicator 'OFF'

The SRS via the RCM, monitors and processes data from the front passenger seat occupant classification sensing system and several other sensors before making a deployment decision. Malfunction of the front passenger seat occupant classification sensing system or associated circuits will cause the SRS indicator to illuminate.

Crash Sensor

The crash sensor is mounted on a bracket which is located on the left-hand side of the radiator upper mounting member. It collects acceleration data from the front of the vehicle and sends it back to the RCM as an analogue signal. It provides the main source of data that enables the RCM to gauge the severity of a frontal impact.

Safety Belt Buckle Sensor

The safety belt buckle sensor is a 'hall effect' type sensor which provides an output signal in response to the magnetic field disturbance caused by the insertion of the safety belt tongue into the buckle. The output signal from the safety belt buckle sensor is used by the RCM to determine whether the front seat occupants are correctly restrained. It is used in conjunction with other components of the SRS to ensure that relevant air bag module and safety belt pretensioner deployment only occurs where necessary. It also forms an integral part of the electrical comfort system. For additional information, refer to Section 501-20A Safety Belt System / 501-20B Supplemental Restraint System. Malfunction of the sensor or associated circuits will cause the SRS indicator to illuminate.

Modules

WARNING: Prior to removal of any SRS modules and before disconnecting any SRS module electrical connectors, the battery ground cable should be disconnected and a period of at least one minute allowed to elapse.

• NOTE: The SRS modules do not contain any serviceable components.

The SRS consists of the following modules:

Restraints Control Module (RCM)

• NOTE: Due to the importance of the RCM being securely fixed to the vehicle body, the ground connection is made via the fixings and is monitored by the diagnostic system.

The RCM is mounted on the top of the drive shaft tunnel below the center console. It identifies crash severity, the direction of impact and makes decisions on deployment of air bag modules and front safety belt pretensioners. It also provides firing signals to all air bag modules and front safety belt pretensioners.

The RCM controls air bag deployment decisions by using signals from its internal accelerometer and the following:

- Crash sensor
- Occupancy sensors
- Front safety belt buckle sensor
- Seat position sensor
- Front passenger seat occupant classification sensing system
- Air bag control module

Internally, the RCM has two areas that determine which elements of the SRS are to be deployed:

- Crash severity evaluation — This area evaluates crash severity by using data from the RCM internal accelerometer, the crash sensor and the safety belt buckle sensor. Based on this data, the RCM decides which level of air bag module deployment is required and forwards the information to the second area, the deployment handler.
- Deployment handler — The status of the seat position sensor, occupancy sensors, front passenger seat occupant classification sensing system and safety belt buckle sensors are examined before a decision is made about which restraints should finally be deployed. For instance, if the occupancy sensing and front passenger seat occupant classification sensing system indicate that the passenger front seat is empty, then no restraint deployment will take place on the passenger side, even if full deployment takes place on the driver side.

Data from the side impact sensors is used by the RCM in conjunction with acceleration data from the RCM internal accelerometer to make a deployment decision. The RCM processes the acceleration data and subject to an impact being of high enough severity, decides whether the side air bag module should be deployed. The decision is forwarded to the deployment handler (within the RCM) which responds appropriately. For example, in the case that the front passenger seat occupant classification sensing system calculates that the seat is empty, or occupied by a small person, the passenger side air bag module will be disabled.

On board testing of the air bag modules, front safety belt pretensioner firing circuits, warning indicator circuits and air bag module status (the crash sensor and side impact sensor perform basic self-tests) is performed by the RCM together with the storing of fault codes.

The RCM drives the SRS indicator on the instrument pack. If the warning lamp fails, a fault code is recorded and a warning tone is sounded. It also provides a temporary back-up power supply to operate the air bag modules in the event that in crash conditions, the battery supply is lost. In the event of a crash, it records certain data such deceleration information, firing delay and fault codes for subsequent access via the diagnostic connector.

Driver Air Bag Module

• NOTE: Variation in the driver air bag module deployment is determined by the timing of the first and second stage ignition signals. This facilitates adaptation of the stiffness and timing of the air bag module to optimize occupant protection.

The driver air bag module is controlled by the RCM which chooses between first or second stage deployment, depending on the occupant position and the crash severity. To reduce the risk of an air bag module induced injury to a driver that is positioned close to the steering wheel, the air bag module deploys radially. It has a non-azide propellant that reduces particulates and effluents. It consists of a twin stage inflator (as opposed to a single stage inflator) with separate chambers for the two inflation stages, each being independently activated by the RCM. It has two air bag electrical connectors that have foolproof mechanical keying and are color coded to the respective connector on the inflator.

Passenger Air Bag Module

• NOTE: Variation in the passenger air bag module deployment is determined by the timing of the first and second stage ignition signals. This facilitates adaptation of the stiffness and timing of the air bag module to optimize occupant protection.

The passenger air bag module is controlled by the RCM which chooses between first or second stage deployment, depending on the occupant status and the crash severity. It consists of a twin stage inflator (as opposed to a single stage inflator) with two air bag electrical connectors to accommodate the twin stage inflation.

The heated gas inflator consists of a high-pressure mix of clean air and hydrogen gas, triggered by two separate ignition squibs. It produces a controlled generation of clean gas to rapidly fill the air bag. It is classified as a stored flammable gas (not as an explosive) and as such, has less restrictive storage and transportation requirements. It produces a very clean burn and almost no particulates and is almost free of any toxins, making disposal or recycling much easier.

Side Air Bag Module

• NOTE: In the event of a side impact that is sufficient to deploy the side air bag module, it will be necessary to replace the complete seat. The side air bag module does not contain any serviceable components.

The side air bag module is mounted in the outboard bolster of each front seat and uses compressed argon to inflate. It provides protection for the thorax (the part of the trunk between the neck and the abdomen) and head. In an air bag deployment situation, it deploys through the stitch seam in the side bolster. To ensure the air bag always emerges at the same point, a chute is attached to the inside of the trim cover and wrapped around the air bag module.

Air Bag Control Module

The air bag control module is located on the right-hand side of the instrument panel. It constantly monitors and processes signals received from the occupancy sensors and makes data available to the RCM, via the CAN network.

Data from the sensors is correlated by the air bag control module and used to decide when the passenger front seat occupant has leaned into an area in front of the passenger air bag deployment door, known as the 'keep-out zone'. The system is sophisticated enough to be unaffected by body extremities (hands and feet) and respond only to head or body movements. When the passenger leans forward into the zone, the system will disable the passenger air bag module and provide visual confirmation by illuminating the PAD indicator.

Indicators

WARNING: Prior to removal of any SRS indicators and before disconnecting any SRS indicator electrical connectors, the battery ground cable should be disconnected and a period of at least one minute allowed to elapse.

• NOTE: The SRS indicators do not contain any serviceable components.

The SRS consists of the following indicators:

Supplemental Restraint System (SRS) Indicator

The SRS indicator is located in the instrument pack and is driven by the RCM. Malfunction of SRS components or associated circuits will cause the SRS indicator to illuminate. If the warning lamp fails, a fault code is recorded and a warning tone is sounded.

Passenger Air Bag Deactivation (PAD) Indicator

The passenger air bag module finish panel has a built in lens that displays the passenger air bag module deactivated symbol. The symbol is backlit by the PAD indicator, which is attached to the passenger air bag module finish panel mounting bracket. The illumination of the symbol informs the front seat occupants whether or not the passenger air bag module has been deactivated by the occupancy sensing system.

Clockspring

WARNING: Prior to removal of the clockspring and before disconnecting any clockspring electrical connectors, the battery ground cable should be disconnected and a period of at least one minute allowed to elapse.

• NOTE: The clockspring does not contain any serviceable components.

The clockspring is located on the steering column, behind the steering wheel and it transfers electrical signals from the SRS system to the driver air bag module.

Published: 11-May-2011

Supplemental Restraint System - Air Bag Supplemental Restraint System (SRS)

Diagnosis and Testing

With the increase in complexity of electronic modules and the multiplexed communication network, the general use of electrical test equipment is no longer practical. The approved Jaguar diagnostic equipment should be used in the diagnosis and testing of air bag supplemental restraint system (SRS) functions.

For detailed instructions on the diagnosis and testing of these functions, refer to the approved Jaguar diagnostic equipment user guide.

Supplemental Restraint System - Air Bag Control Module

Removal and Installation

All vehicles

• WARNINGS:

BEFORE ANY AIR BAG/SRS SERVICE IS PERFORMED, AT LEAST ONE MINUTE MUST ELAPSE AFTER DISCONNECTION OF THE BATTERY POSITIVE CABLE TO ALLOW DISSIPATION OF BACK-UP POWER SUPPLY ENERGY.

IN THE EVENT OF A FAULT RUPTURING THE 10A BATTERY SUPPLY FUSE (F4 LOCATED IN THE FUSE BOX AT THE DRIVER'S END OF THE FASCIA) THE FUSE MUST NOT BE RENEWED UNTIL THE AIR BAG/SRS SYSTEM HAS BEEN DE-ACTIVATED. FUSES OF ANY OTHER VALUE MUST NEVER BE USED AS THIS CAN CAUSE DISARM FAILURE.

AN ECS OR RCM MODULE ONLY REQUIRES REPLACEMENT IF THE SYSTEM HAS INCURRED FIVE SEPARATE DEPLOYMENTS. AT NO TIME CHANGE ECS OR RCM FOR LESS THAN FIVE SEPARATE DEPLOYMENTS.

ALWAYS WEAR SAFETY GLASSES WHEN REPAIRING AN AIR BAG SUPPLEMENTAL RESTRAINT SYSTEM (SRS) VEHICLE AND WHEN HANDLING AN AIR BAG MODULE. FAILURE TO FOLLOW THIS INSTRUCTION MAY RESULT IN PERSONAL INJURY.

NEVER PROBE THE CONNECTORS ON THE AIR BAG MODULE. DOING SO MAY RESULT IN AIR BAG DEPLOYMENT. FAILURE TO FOLLOW THIS INSTRUCTION MAY RESULT IN PERSONAL INJURY.

VEHICLE SENSOR ORIENTATION IS CRITICAL FOR CORRECT SYSTEM OPERATION. IF A VEHICLE EQUIPPED WITH AN AIR BAG SUPPLEMENTAL RESTRAINT SYSTEM (SRS) IS INVOLVED IN A COLLISION, INSPECT THE SENSOR MOUNTING BRACKET AND WIRING PIGTAIL FOR DEFORMATION. IF DAMAGED, INSTALL A NEW SENSOR WHETHER OR NOT THE AIR BAG IS DEPLOYED. IF THE BODY WORK IS DAMAGED THIS WILL HAVE TO BE ADDRESSED.

TO AVOID ACCIDENTAL DEPLOYMENT AND POSSIBLE PERSONAL INJURY, THE BACKUP POWER SUPPLY MUST BE DEPLETED BEFORE REPAIRING OR REPLACING ANY AIR BAG SUPPLEMENTAL RESTRAINT SYSTEM (SRS) COMPONENTS. TO DEPLETE THE BACKUP POWER SUPPLY ENERGY, DISCONNECT THE BATTERY GROUND CABLE AND WAIT ONE MINUTE. FAILURE TO FOLLOW THIS INSTRUCTION MAY RESULT IN PERSONAL INJURY.

• NOTE: Repair is made by replacement only. If a part is replaced and the new part does not correct the condition, install the original part and carry out the diagnostic procedure again.

• NOTE: When installing a new air bag module, a prepaid return postcard is provided with the replacement air bag module. The serial number for the new part and the vehicle identification number (VIN) must be recorded and sent to Jaguar Cars Ltd.

1. Position the driver seat fully rearwards.
2. Disconnect the battery ground cable.
   For additional information, refer to Section 414-01 Battery, Mounting and Cables.

Right-hand drive vehicles

3. Remove the instrument panel lower trim panel.
   For additional information, refer to Section 501-12 Instrument Panel and Console.

Left-hand drive vehicles

4. Remove the glove compartment.
   For additional information, refer to Section 501-12 Instrument Panel and Console.

All vehicles

5. Remove the right-hand cowl side trim panel.
   For additional information, refer to Section 501-05 Interior Trim and Ornamentation.
6. Detach the wiring harness.

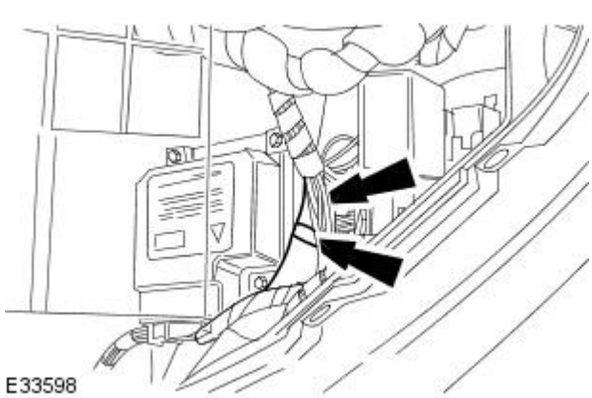

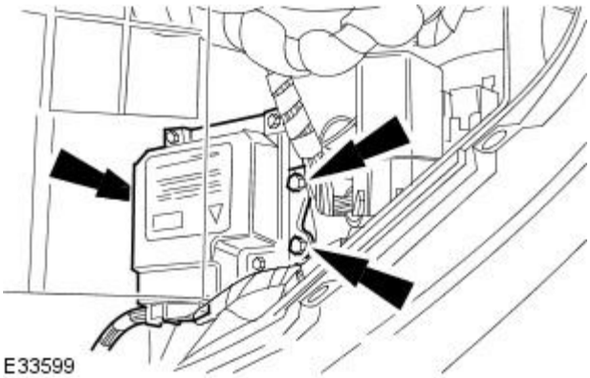

7. Detach the air bag control module and bracket.

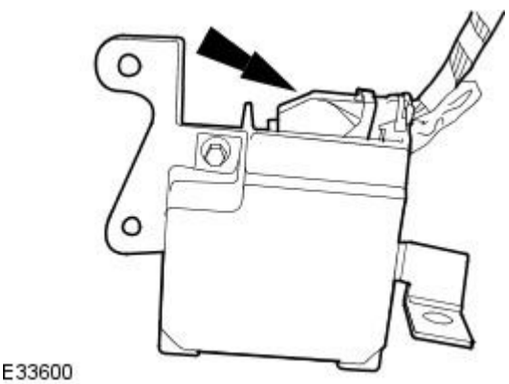

8. Remove the air bag control module and bracket.

- Disconnect the electrical connector.

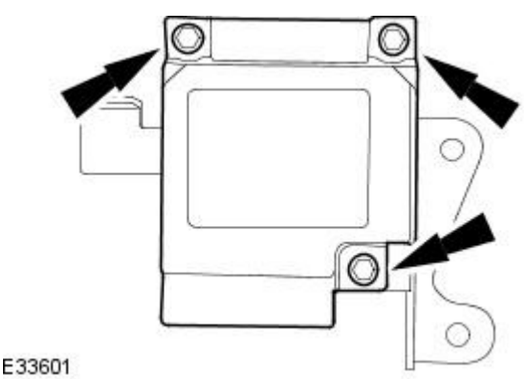

9. Remove the air bag control module.

Installation

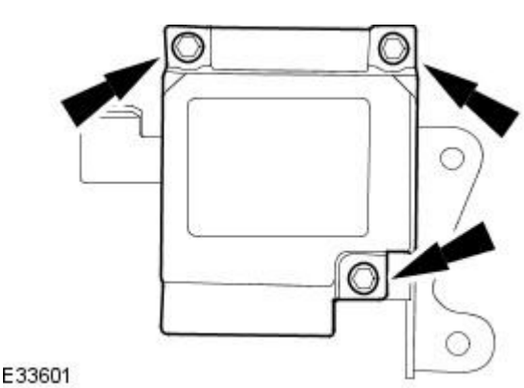

1. To install, reverse the removal procedure.

- Tighten to 2 Nm.

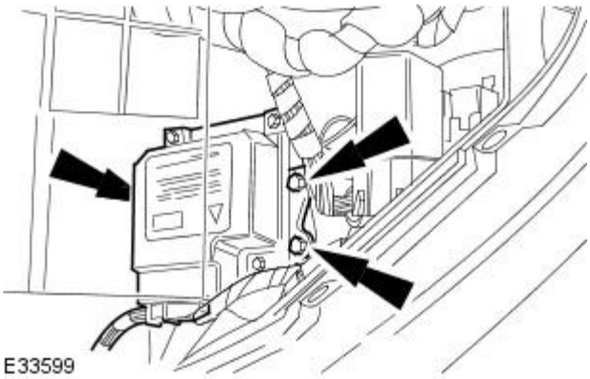

2. Tighten to 6 Nm.

Supplemental Restraint System - Crash Sensor

Removal and Installation

Removal

• WARNINGS:

BEFORE ANY AIR BAG/SRS SERVICE IS PERFORMED, AT LEAST ONE MINUTE MUST ELAPSE AFTER DISCONNECTION OF THE BATTERY POSITIVE CABLE TO ALLOW DISSIPATION OF BACK-UP POWER SUPPLY ENERGY.

Never probe the electrical connectors of the air bag modules or any other SRS component. Failure to follow this instruction may result in personal injury.

1. Disconnect the battery ground cable.
   For additional information, refer to Section 414-01 Battery, Mounting and Cables.
2. Remove the radiator support bracket.

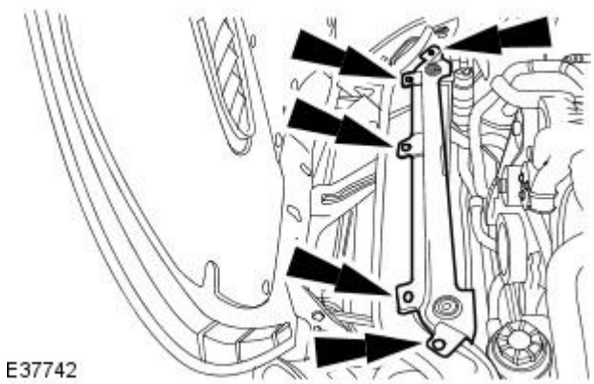

3. Disconnect the crash sensor electrical connector.

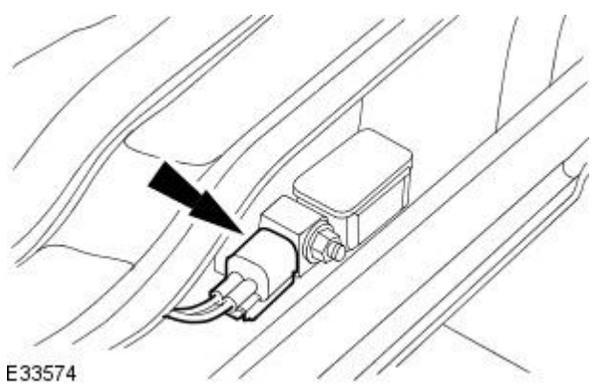

4. Remove the crash sensor.

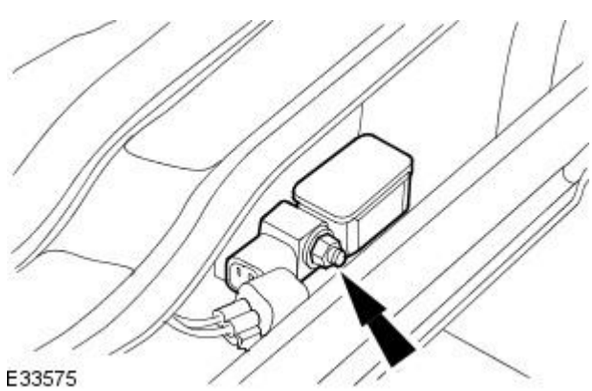

Installation

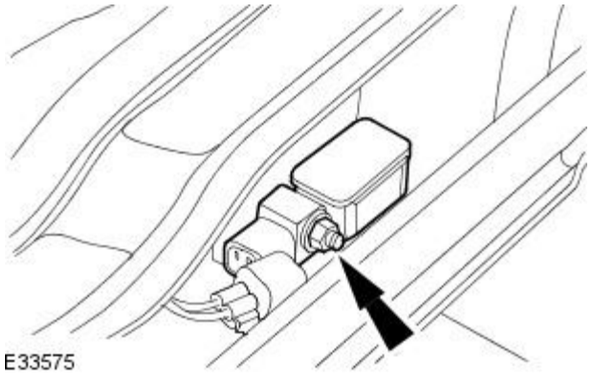

1. To install, reverse the removal procedure.

- Tighten to 12 Nm.

Supplemental Restraint System - Driver Air Bag Module

Removal and Installation

Removal

• WARNINGS:

BEFORE ANY AIR BAG/SRS SERVICE IS PERFORMED, AT LEAST ONE MINUTE MUST ELAPSE AFTER DISCONNECTION OF THE BATTERY POSITIVE CABLE TO ALLOW DISSIPATION OF BACK-UP POWER SUPPLY ENERGY.

IN THE EVENT OF A FAULT RUPTURING THE 10A BATTERY SUPPLY FUSE (F4 LOCATED IN THE FUSE BOX AT THE DRIVER'S END OF THE FASCIA) THE FUSE MUST NOT BE RENEWED UNTIL THE AIR BAG/SRS SYSTEM HAS BEEN DE-ACTIVATED. FUSES OF ANY OTHER VALUE MUST NEVER BE USED AS THIS CAN CAUSE DISARM FAILURE.

FOLLOWING TEN YEARS IN SERVICE, AN AIR BAG ASSEMBLY MUST BE REMOVED AND DISPOSED OF IN THE APPROVED MANNER AND A NEW AIR BAG MUST BE INSTALLED.

AN ECS OR RCM MODULE ONLY REQUIRES REPLACEMENT IF THE SYSTEM HAS INCURRED FIVE SEPARATE DEPLOYMENTS. AT NO TIME CHANGE ECS OR RCM FOR LESS THAN FIVE SEPARATE DEPLOYMENTS.

ALWAYS WEAR SAFETY GLASSES WHEN REPAIRING AN AIR BAG SUPPLEMENTAL RESTRAINT SYSTEM (SRS) VEHICLE AND WHEN HANDLING AN AIR BAG MODULE. FAILURE TO FOLLOW THIS INSTRUCTION MAY RESULT IN PERSONAL INJURY.

CARRY A LIVE AIR BAG MODULE WITH THE AIR BAG AND TRIM COVER POINTED AWAY FROM YOUR BODY. THIS WILL REDUCE THE RISK OF INJURY IN THE EVENT OF AN ACCIDENTAL DEPLOYMENT. FAILURE TO FOLLOW THIS INSTRUCTION MAY RESULT IN PERSONAL INJURY.

DO NOT SET A LIVE AIR BAG MODULE DOWN WITH THE TRIM COVER FACE DOWN. FAILURE TO FOLLOW THIS INSTRUCTION MAY RESULT IN PERSONAL INJURY.

AFTER DEPLOYMENT, THE AIR BAG SURFACE CAN CONTAIN DEPOSITS OF SODIUM HYDROXIDE, A PRODUCT OF THE GAS GENERATED DURING COMBUSTION THAT IS IRRITATING TO THE SKIN. WASH YOUR HANDS WITH SOAP AND WATER AFTERWARDS. FAILURE TO FOLLOW THIS INSTRUCTION MAY RESULT IN PERSONAL INJURY.

NEVER PROBE THE CONNECTORS ON THE AIR BAG MODULE. DOING SO MAY RESULT IN AIR BAG DEPLOYMENT. FAILURE TO FOLLOW THIS INSTRUCTION MAY RESULT IN PERSONAL INJURY.

AIR BAG MODULES WITH DISCOLORED OR DAMAGED TRIM COVERS MUST BE REPLACED.

VEHICLE SENSOR ORIENTATION IS CRITICAL FOR CORRECT SYSTEM OPERATION. IF A VEHICLE EQUIPPED WITH AN AIR BAG SUPPLEMENTAL RESTRAINT SYSTEM (SRS) IS INVOLVED IN A COLLISION, INSPECT THE SENSOR MOUNTING BRACKET AND WIRING PIGTAIL FOR DEFORMATION. IF DAMAGED, INSTALL A NEW SENSOR WHETHER OR NOT THE AIR BAG IS DEPLOYED. IF THE BODY WORK IS DAMAGED THIS WILL HAVE TO BE ADDRESSED.

TO AVOID ACCIDENTAL DEPLOYMENT AND POSSIBLE PERSONAL INJURY, THE BACKUP POWER SUPPLY MUST BE DEPLETED BEFORE REPAIRING OR REPLACING ANY AIR BAG SUPPLEMENTAL RESTRAINT SYSTEM (SRS) COMPONENTS. TO DEPLETE THE BACKUP POWER SUPPLY ENERGY, DISCONNECT THE BATTERY GROUND CABLE AND WAIT ONE MINUTE. FAILURE TO FOLLOW THIS INSTRUCTION MAY RESULT IN PERSONAL INJURY.

• NOTE: Repair is made by replacement only. If a part is replaced and the new part does not correct the condition, install the original part and carry out the diagnostic procedure again.

• NOTE: When installing a new air bag module, a prepaid return postcard is provided with the replacement air bag module. The serial number for the new part and the vehicle identification number (VIN) must be recorded and sent to Jaguar Cars Ltd.

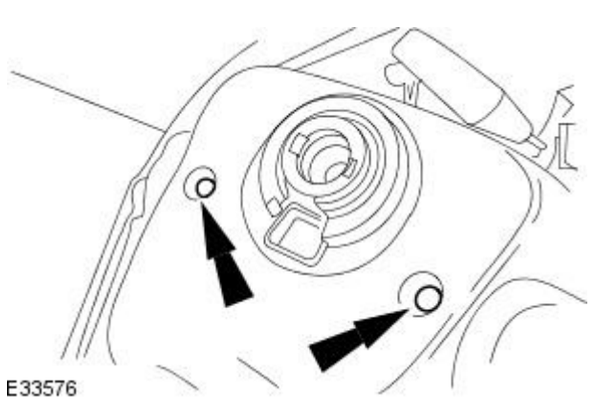

1. Disconnect the battery ground cable.
   For additional information, refer to Section 414-01 Battery, Mounting and Cables.
2. Detach the driver air bag module.
   - Rotate the steering wheel 90 degrees counterclockwise to provide access to the driver air bag module left-hand retaining bolt and fully loosen the captive retaining bolt.
   - Rotate the steering wheel 90 degrees clockwise to provide access to the driver air bag module right-hand retaining bolt and fully loosen the captive retaining bolt.

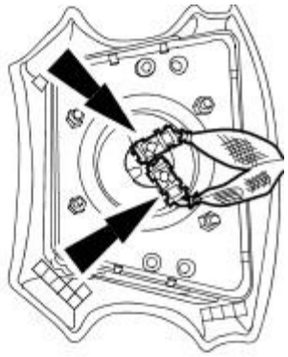

E33577

3. Remove the driver air bag module.

- Disconnect the electrical connectors.

Installation

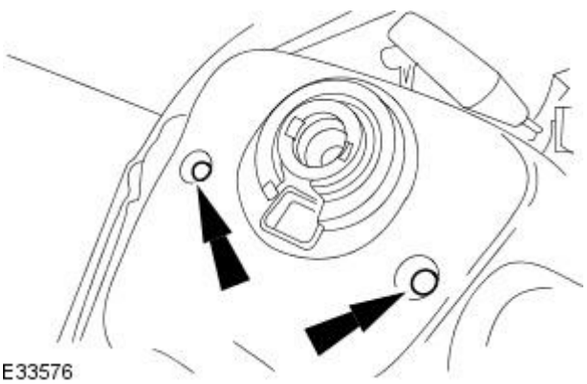

E33576

1. To install, reverse the removal procedure.

- Tighten to 12 Nm.

Supplemental Restraint System - Front Passenger Seat Occupant Classification SensorVehicles Without: Recaro Seats

Removal and Installation

Removal

• WARNINGS:

BEFORE ANY AIR BAG/SRS SERVICE IS PERFORMED, AT LEAST ONE MINUTE MUST ELAPSE AFTER DISCONNECTION OF THE BATTERY POSITIVE CABLE TO ALLOW DISSIPATION OF BACK-UP POWER SUPPLY ENERGY.

Never probe the electrical connectors of the air bag modules or any other SRS component. Failure to follow this instruction may result in personal injury.

CAUTION: Electronic components in the seats are sensitive to impact. Handle the seat with care. Failure to follow this instruction may result in damage to the vehicle.

1. Remove the front passenger seat.
   For additional information, refer to Section 501-10 Seating.
2. Remove the passenger seat module (PSM).
   For additional information, refer to Section 419-10 Multifunction Electronic Modules.
3. Remove the seat control switch.
   For additional information, refer to Section 501-10 Seating.
4. Remove the seat base retaining nuts.

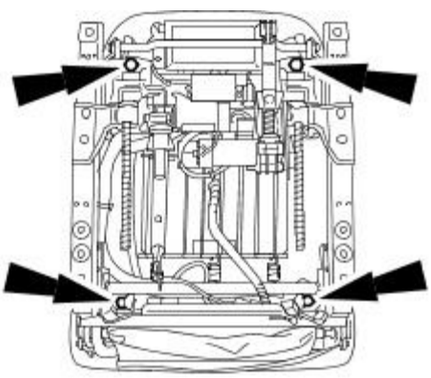

E33633

5. Detach the lower finish panel.

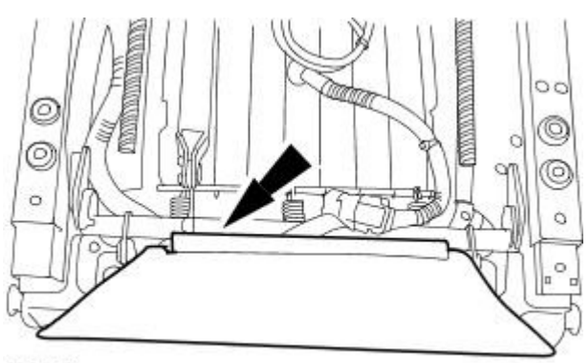

E33634

6. Disconnect the front seat cushion heater mat electrical connector.

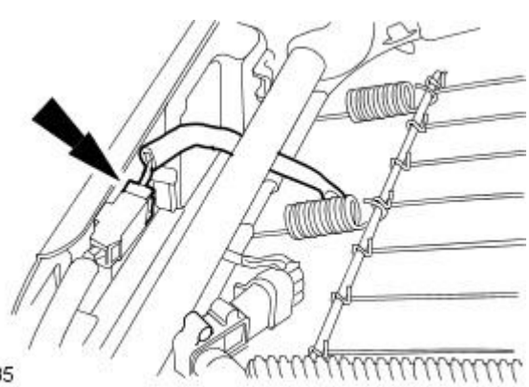

E33635

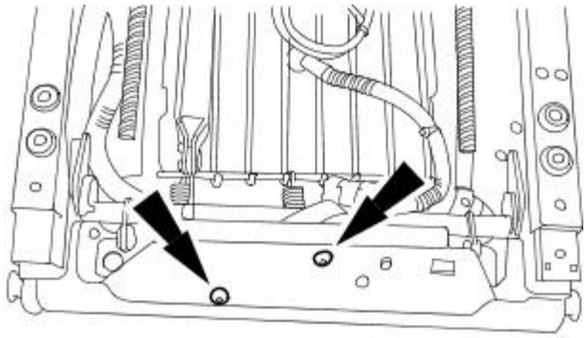

E33636

7. Detach the front passenger seat occupant classification sensor control module.

- Remove and discard the rivets.

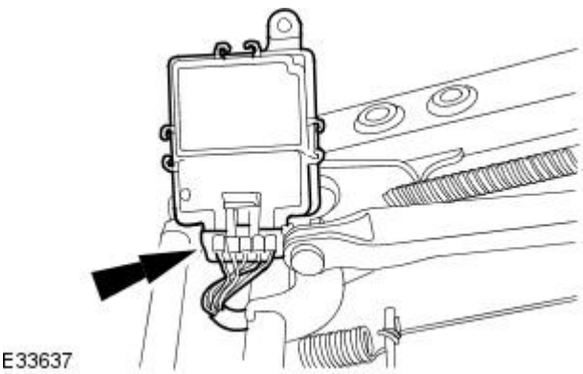

E33637

8. Remove and discard the front passenger seat occupant classification sensor control module.

- Disconnect the electrical connector.

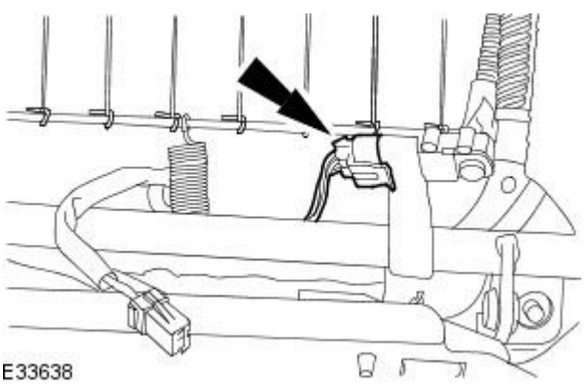

E33638

9. Disconnect the front passenger seat occupant classification sensor electrical connector.

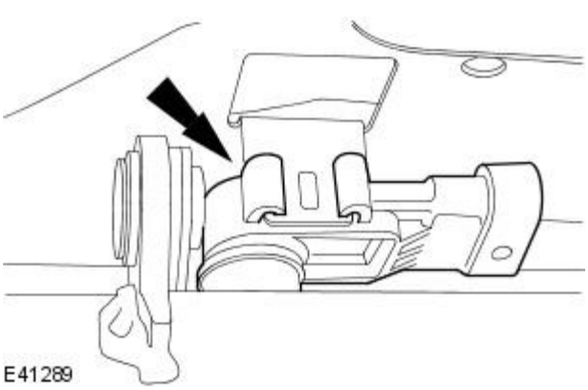

E41289

10. Detach the front passenger seat occupant classification sensor.

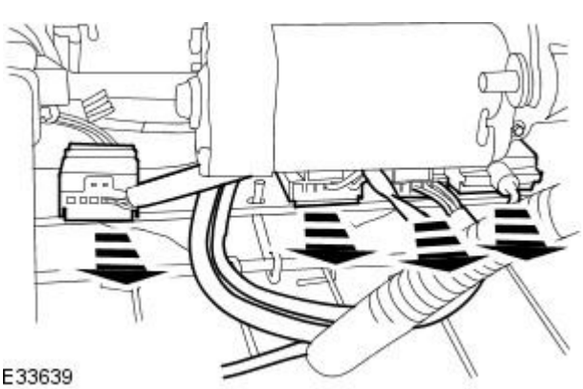

E33639

11. Detach the electrical connectors.

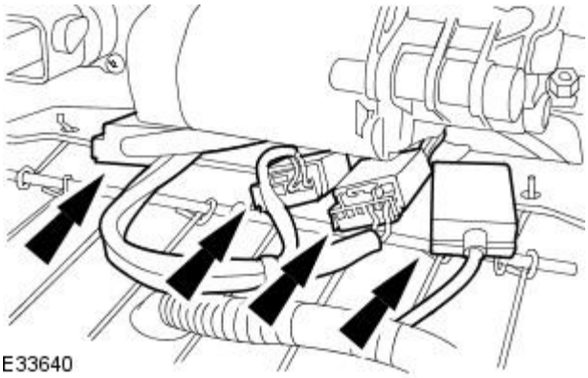
E33640

12. Disconnect the electrical connectors.

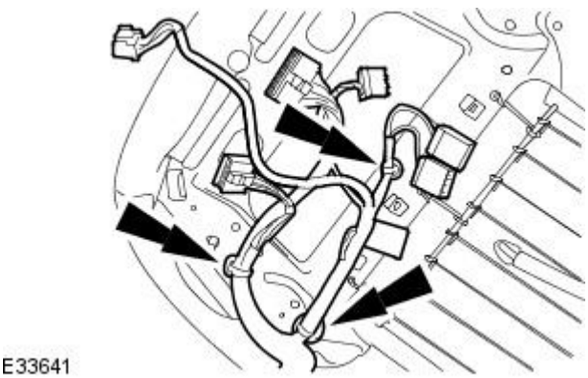
E33641

13. Detach the seat wiring harness.

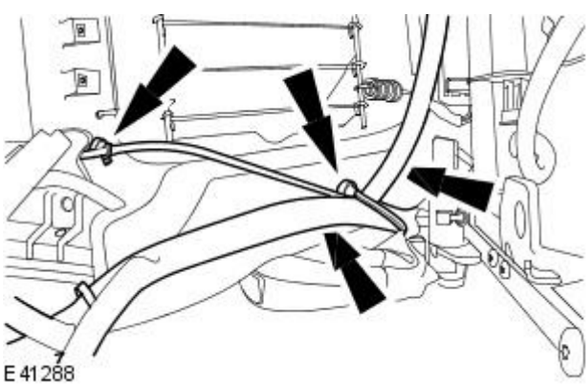
E41288

14. Detach the seat wiring harness.

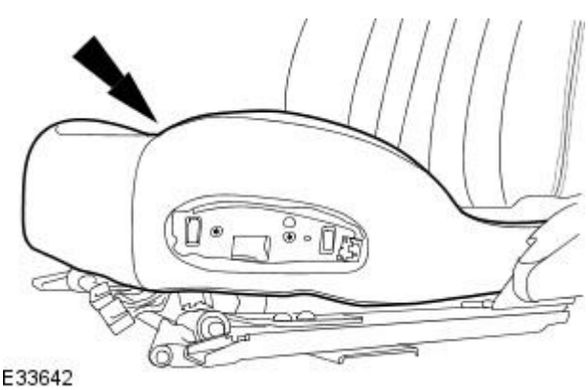
E33642

15. Remove the front seat cushion from the seat base.

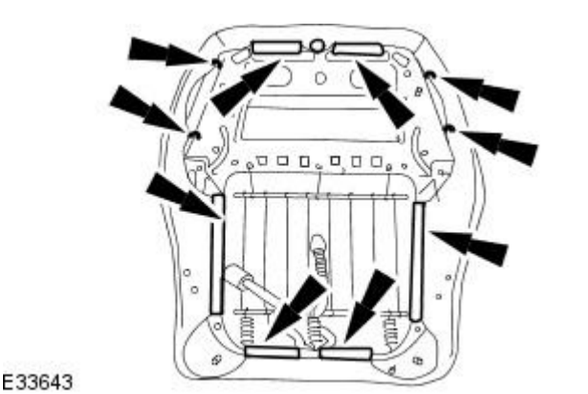
E33643

16. Detach the front seat cushion cover from the seat base.

- Remove and discard the hog rings.
- Release the retaining clips.

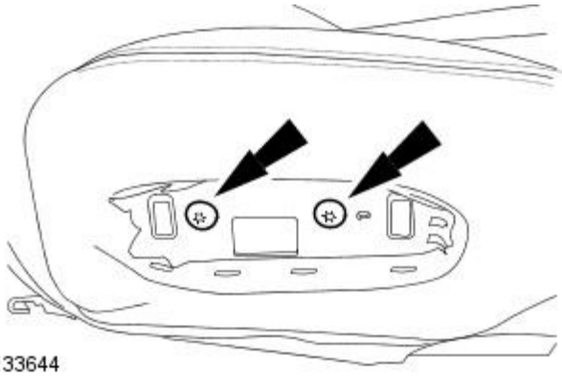

E33644

17. Remove the seat control switch housing retaining screws.

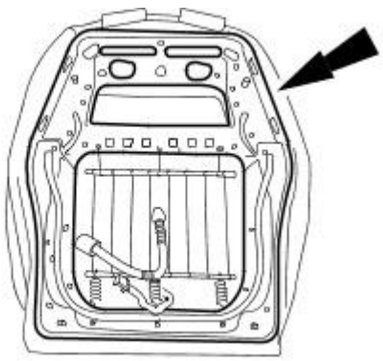

E33645

18. Remove the seat base.

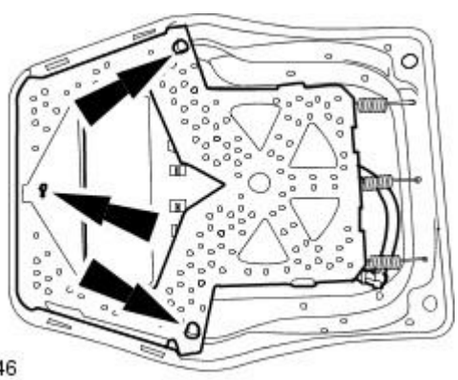

E33646

19. Remove and discard the silicon filled bladder and front passenger seat occupant classification sensor assembly.

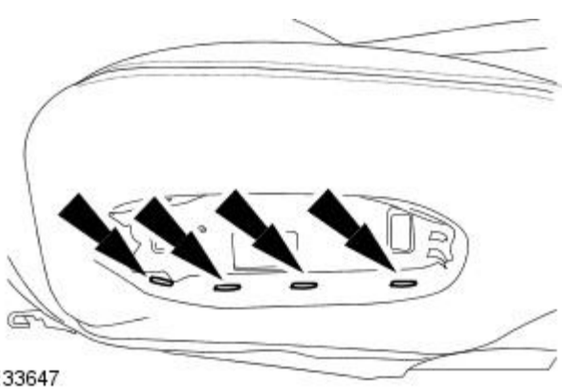

E33647

20. Remove and discard the front seat cushion cover retaining staples.

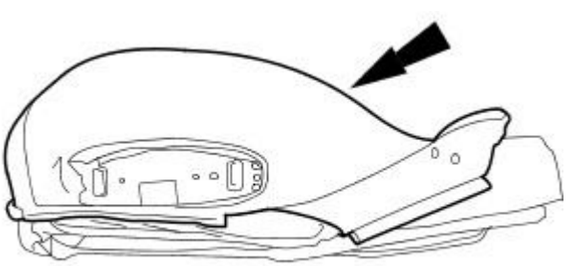

E33648

21. Detach the front seat cushion cover.

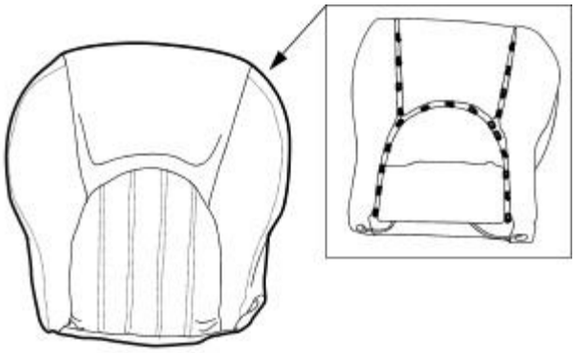

E33649

22. Remove the front seat cushion cover.

- Remove and discard the hog rings.

Installation

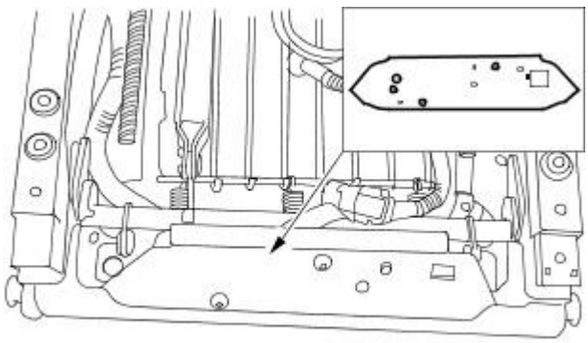

E33685

1. Align the service kit template to the rear of the seat base.

2. NOTE: Make sure that all the swarf is removed from the seat.

Drill the new holes for the front passenger seat occupant classification sensor control module and electrical connector.

3. Loosely install the front passenger seat occupant classification sensor service kit.

- Install the service kit wiring harness through the seat base.

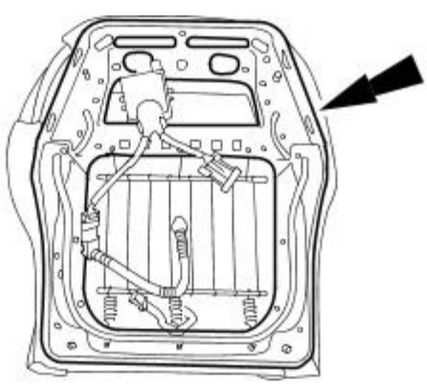

E33650

4. Install the silicon filled bladder retaining clips and tie strap.

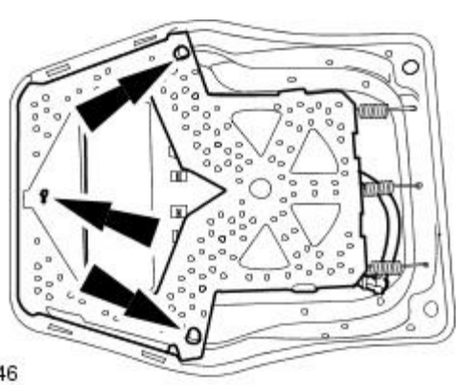

E33646

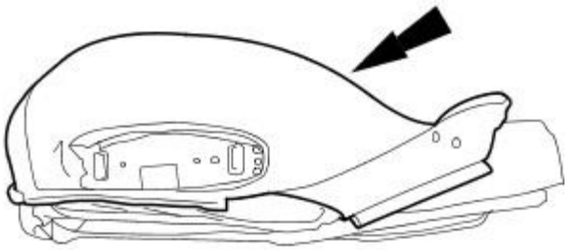

E33648

5. Install the seat cushion cover.

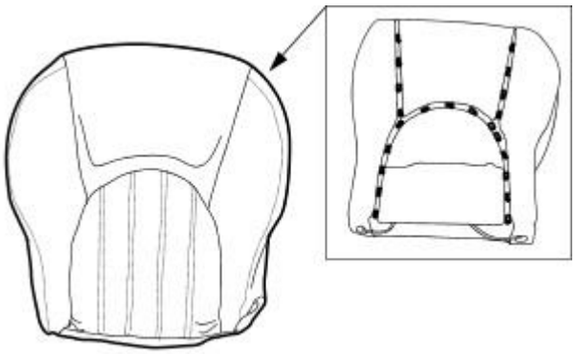

E33649

6. NOTE: Install new hog rings.

Attach the front seat cushion cover to the seat cushion.

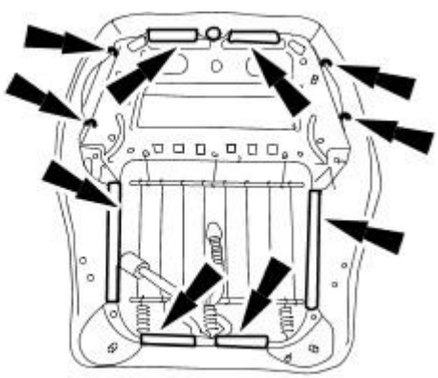

E33643

7. NOTE: Install new hog rings.

Attach the front seat cushion to the seat base.

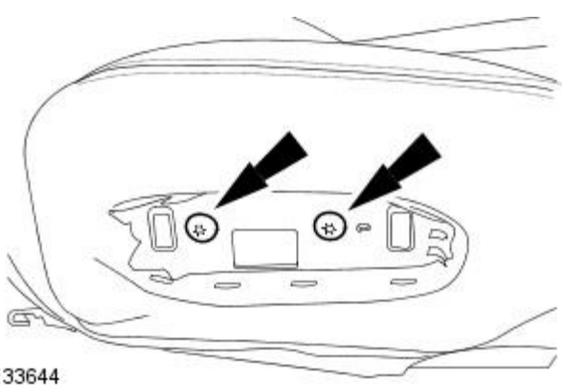

E33644

8. Install the seat control switch housing retaining screws.

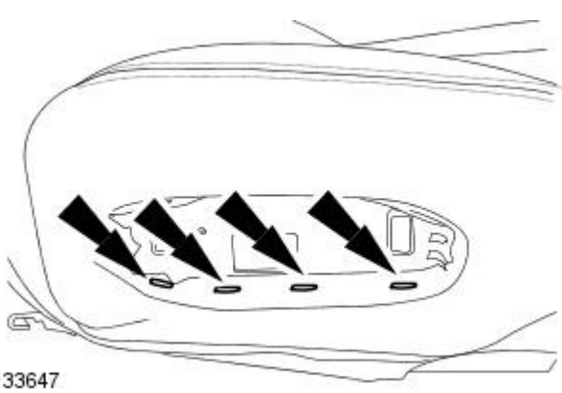

E33647

9. NOTE: Install new staples.

Attach the front seat cushion cover.

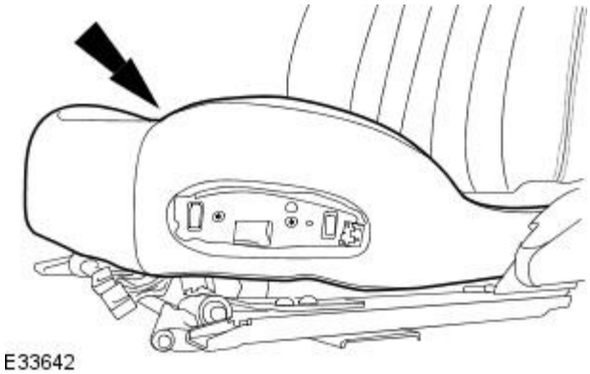
E33642

10. Install the front seat cushion to the seat base.

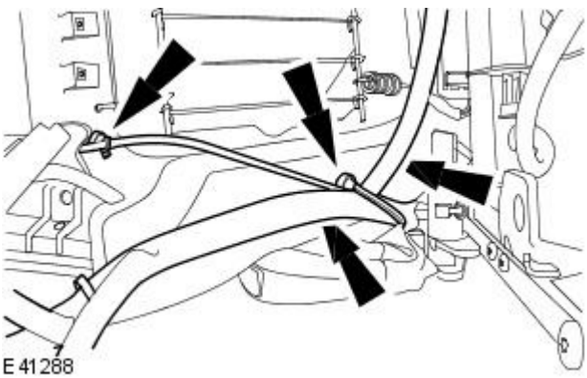
E41288

11. Attach the seat wiring harness.

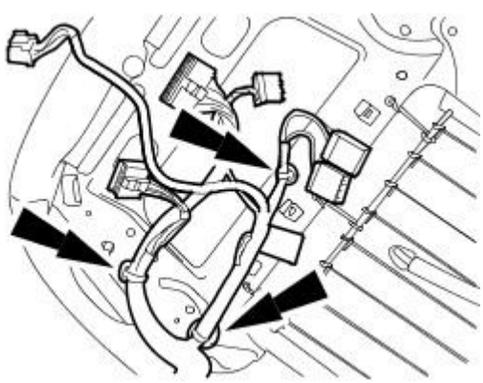
E33641

12. Attach the seat wiring harness.

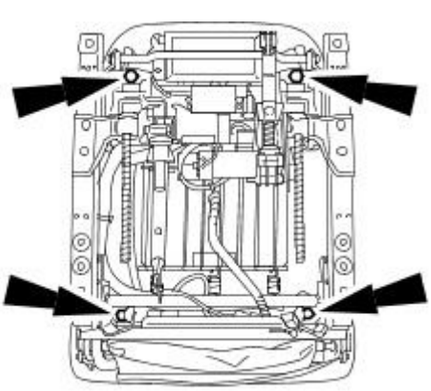
E33633

13. Install the seat base retaining nuts.

- Tighten to 18 Nm.

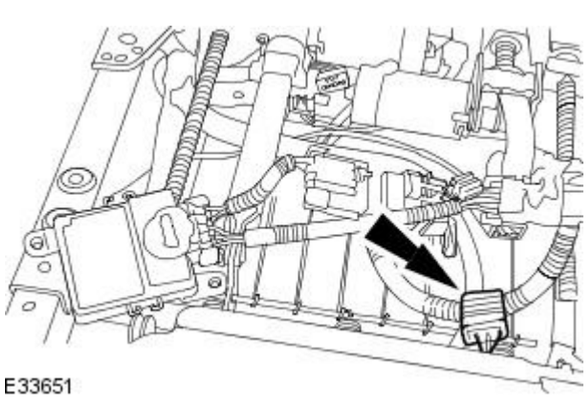
E33651

14. Insulate and secure the unused front passenger seat occupant classification sensor electrical connector to the seat frame.

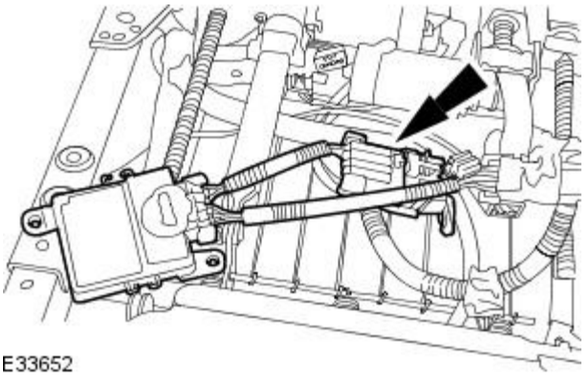

E33652

15. Connect the front passenger seat occupant classification sensor control module harness wiring electrical connector.

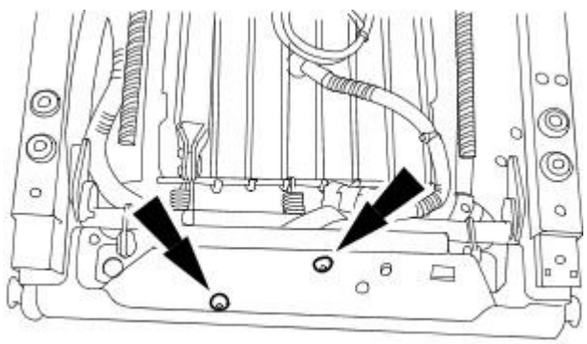

E33636

16. NOTE: Install new rivets.

Install the front passenger seat occupant classification sensor control module and attach the electrical connector to the seat kickplate.

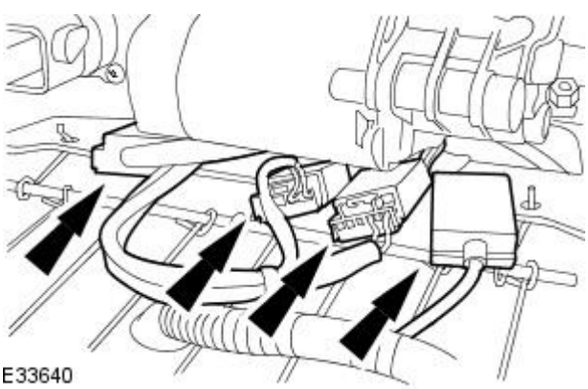

E33640

17. Connect the electrical connectors.

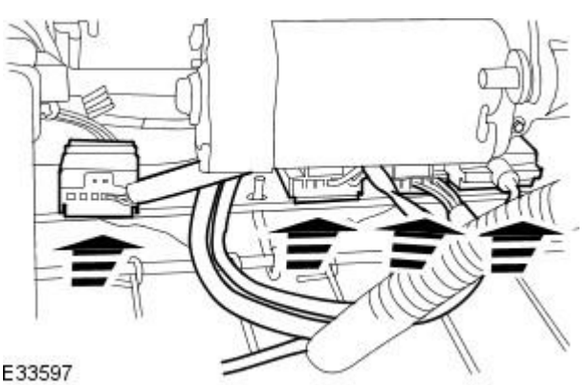

E33597

18. Attach the electrical connectors.

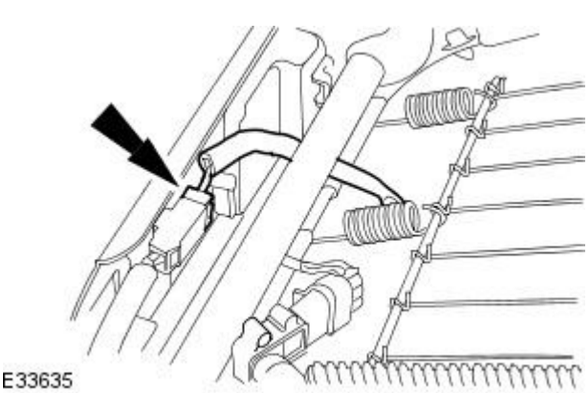

E33635

19. Connect the front seat cushion heater mat electrical connector.

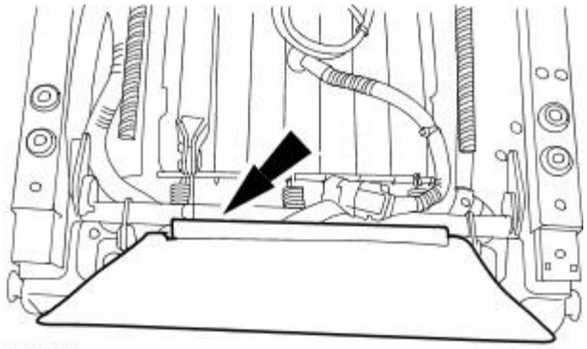

E33634

20. Attach the lower finish panel.

21. Install the seat control switch.
For additional information, refer to Section 501-10 Seating.

22. Install the PSM.
For additional information, refer to Section 419-10 Multifunction Electronic Modules.

23. Install the front passenger seat.
For additional information, refer to Section 501-10 Seating.

24. Initialize the system. For additional information, refer to the Jaguar approved diagnostic system.

Supplemental Restraint System - Front Passenger Seat Occupant Classification SensorVehicles With: Recaro Seats

Removal and Installation

Removal

• WARNINGS:

BEFORE ANY AIR BAG/SRS SERVICE IS PERFORMED, AT LEAST ONE MINUTE MUST ELAPSE AFTER DISCONNECTION OF THE BATTERY POSITIVE CABLE TO ALLOW DISSIPATION OF BACK-UP POWER SUPPLY ENERGY.

Never probe the electrical connectors of the air bag modules or any other SRS component. Failure to follow this instruction may result in personal injury.

CAUTION: Electronic components in the seats are sensitive to impact. Handle the seat with care. Failure to follow this instruction may result in damage to the vehicle.

1. Remove the front passenger seat.
   For additional information, refer to Section 501-10 Seating.
2. Remove the passenger seat module (PSM).
   For additional information, refer to Section 419-10 Multifunction Electronic Modules.
3. Remove the seat control switch.
   For additional information, refer to Section 501-10 Seating.
4. Remove the seat base retaining nuts.

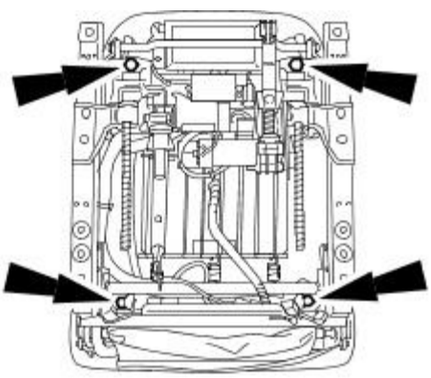

E33633

5. Detach the lower finish panel.

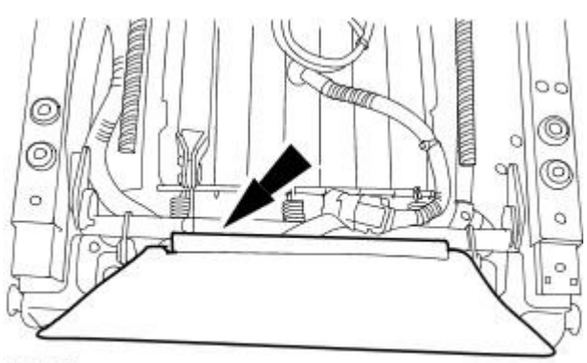

E33634

6. Detach the front seat cushion cover from the seat base.

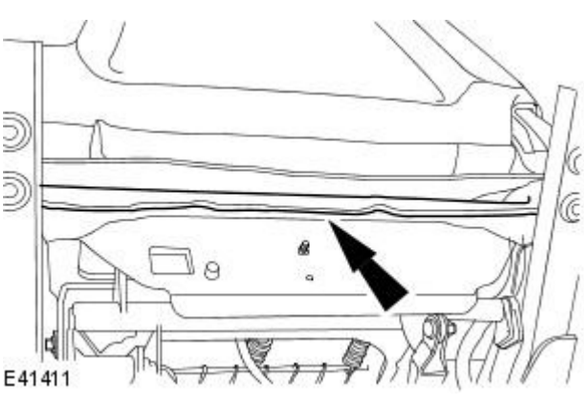

E41411

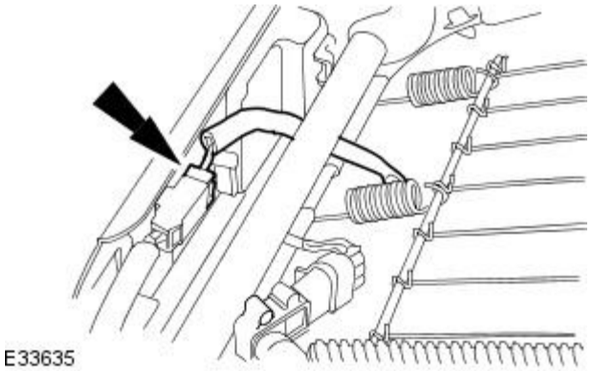

7. Disconnect the front seat cushion heater mat electrical connector.

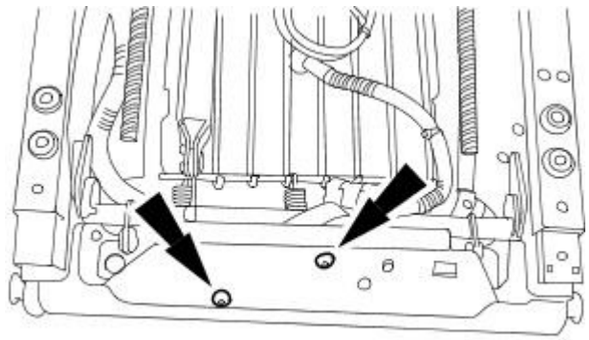

8. Detach the front passenger seat occupant classification sensor control module.

- Remove and discard the retaining rivets.

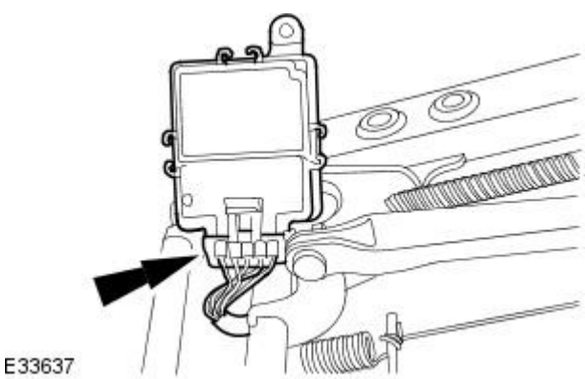

9. Remove and discard the front passenger seat occupant classification sensor control module.

- Disconnect the electrical connector.

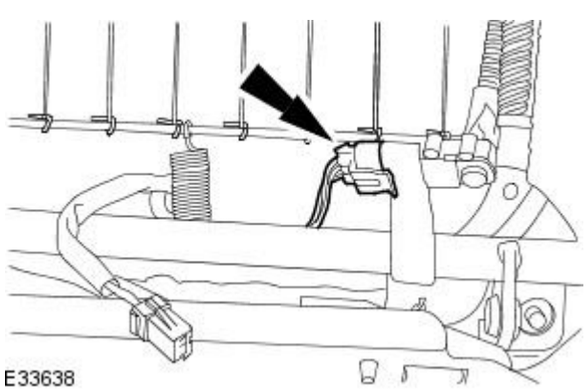

10. Disconnect the front passenger seat occupant classification sensor electrical connector.

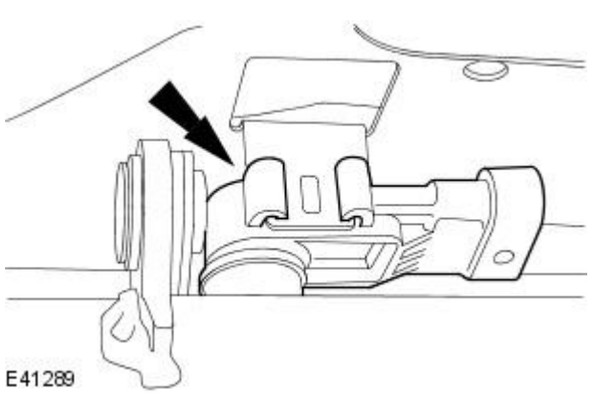

11. Detach the front passenger seat occupant classification sensor.

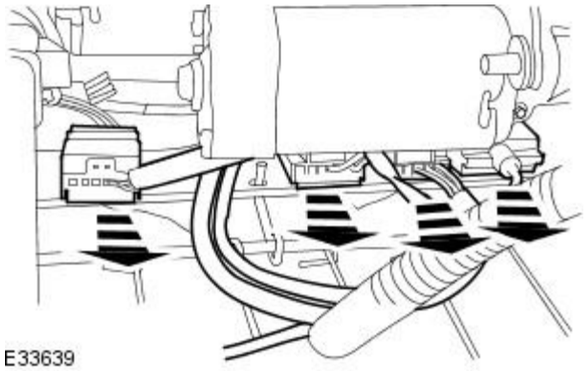
E33639

12. Detach the electrical connectors.

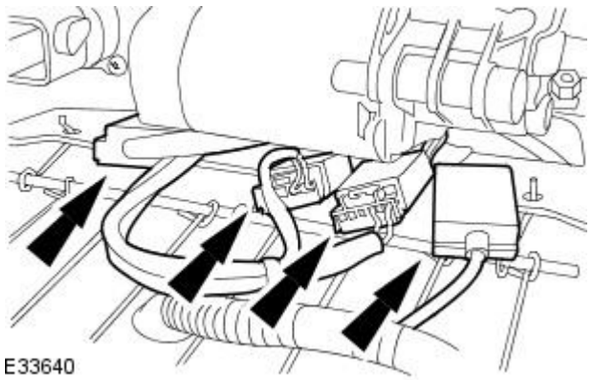
E33640

13. Disconnect the electrical connectors.

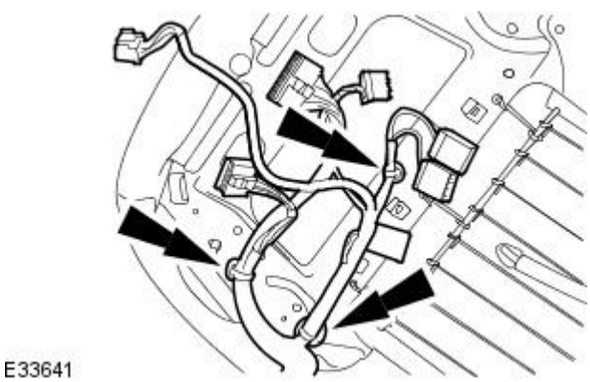
E33641

14. Detach the seat wiring harness.

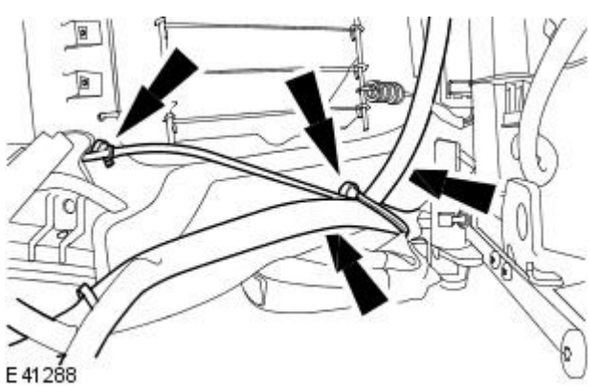
E41288

15. Detach the seat wiring harness.

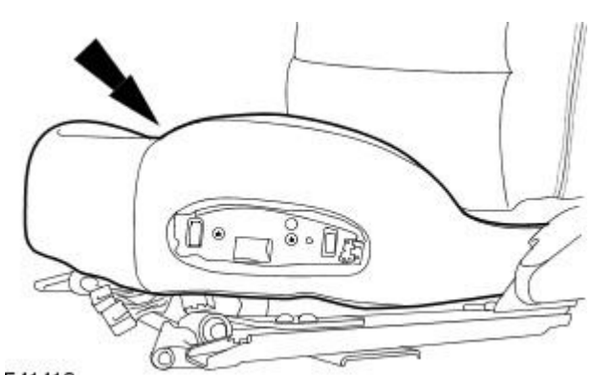
E41413

16. Remove the front seat cushion from the seat base.

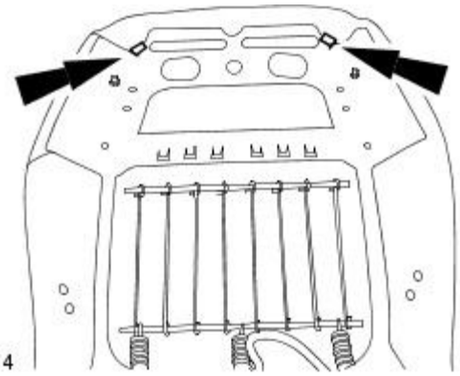

E41414

17. Remove and discard the front seat cushion cover front retaining clips.

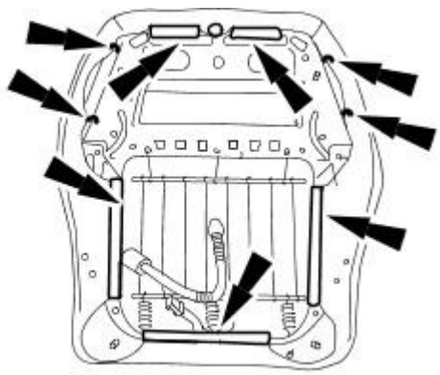

E41412

18. Detach the front seat cushion cover from the seat base.

- Remove and discard the hog rings.
- Release the retaining clips.

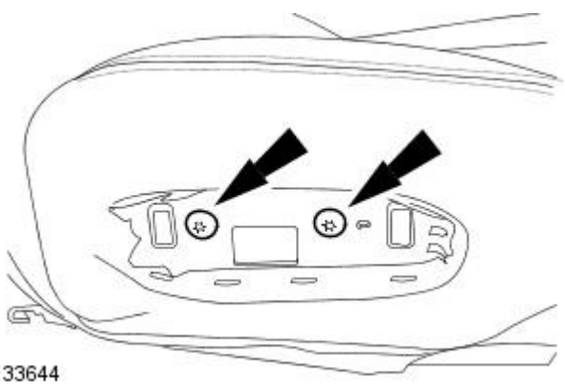

E33644

19. Remove the seat control switch housing retaining screws.

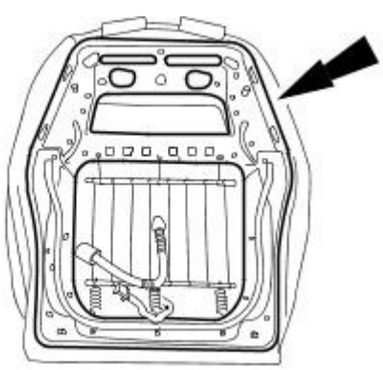

E33645

20. Remove the seat base.

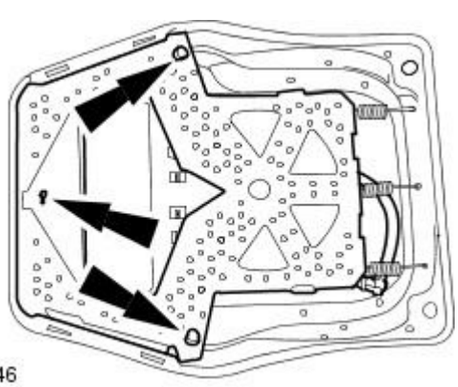

E33646

21. Remove and discard the silicon filled bladder and front passenger seat occupant classification sensor assembly.

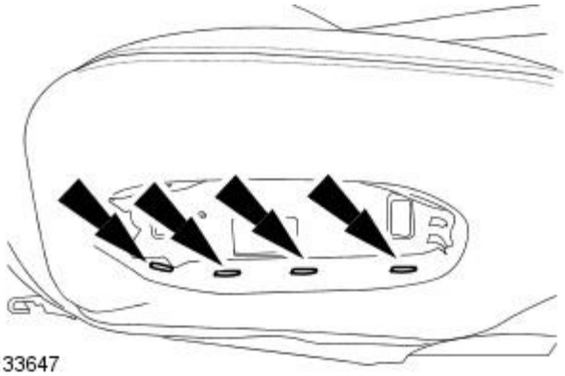

E33647

22. Remove and discard the front seat cushion cover retaining staples.

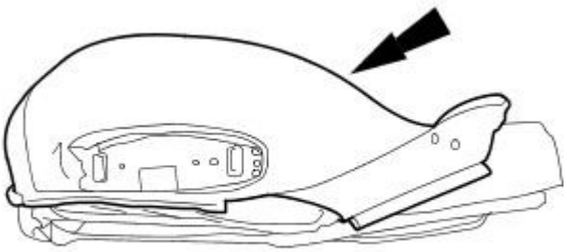

E33648

23. Detach the front seat cushion cover.

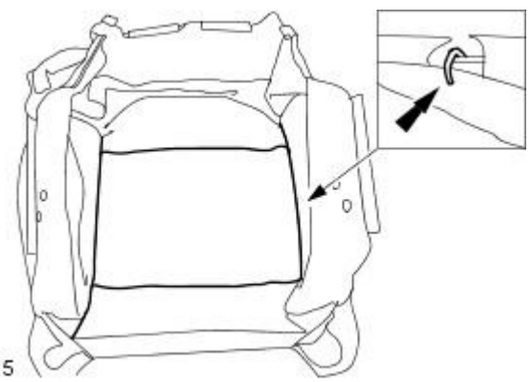

E41415

24. Remove the front seat cushion cover.

- Remove and discard the hog rings.

Installation

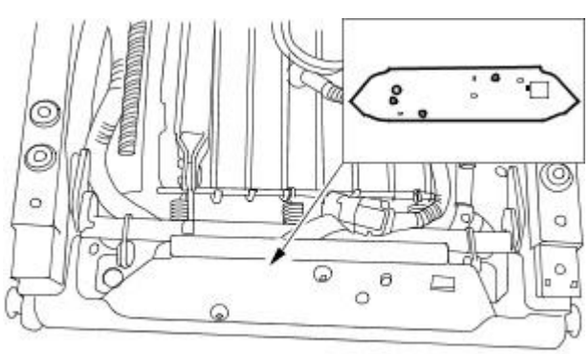

E33685

1. Align the service kit template to the rear of the seat base.

2. NOTE: Make sure that all the swarf is removed from the seat.

Drill the new holes for the front passenger seat occupant classification sensor control module and electrical connector.

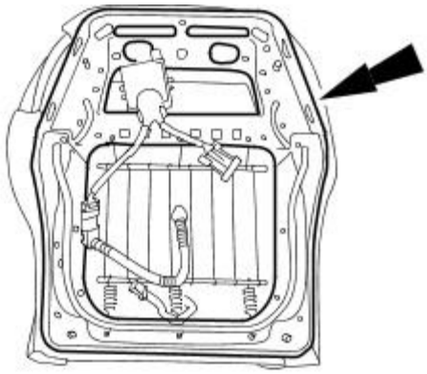

E33650

3. Loosely install the front passenger seat occupant classification sensor service kit.

- Install the service kit wiring harness through the seat base.

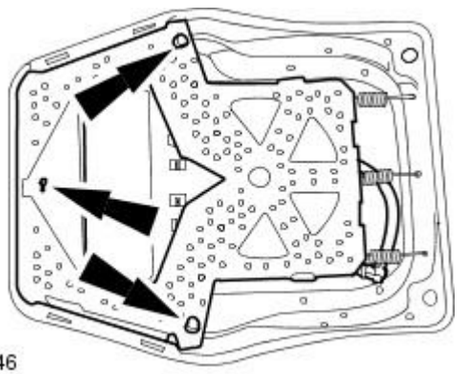

E33646

4. Install the silicon filled bladder retaining clips and tie strap.

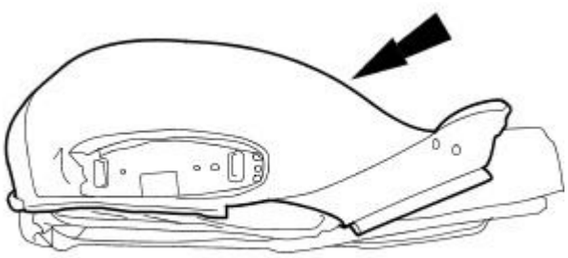

E33648

5. Install the seat cushion cover.

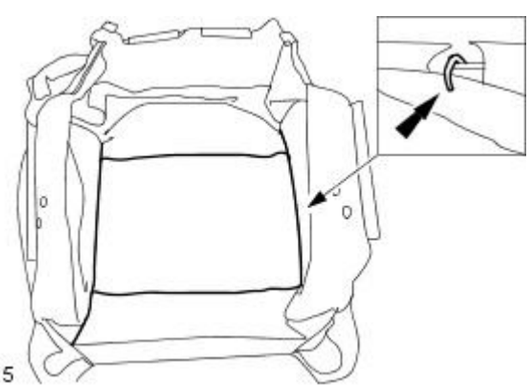

E41415

6. NOTE: Install new hog rings.

Attach the front seat cushion cover to the front seat cushion.

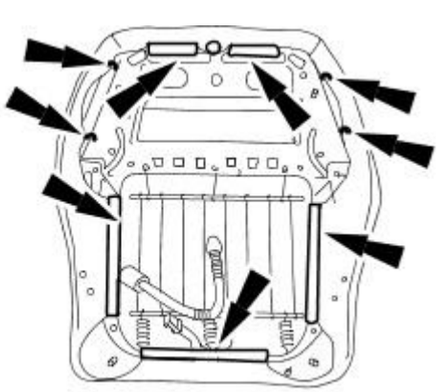

E41412

7. NOTE: Install new hog rings.

Attach the front seat cushion to the seat base.

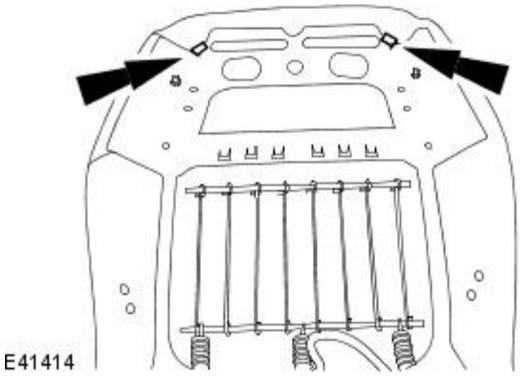

8. NOTE: Install new retaining clips.

Attach the front seat cushion to the seat base.

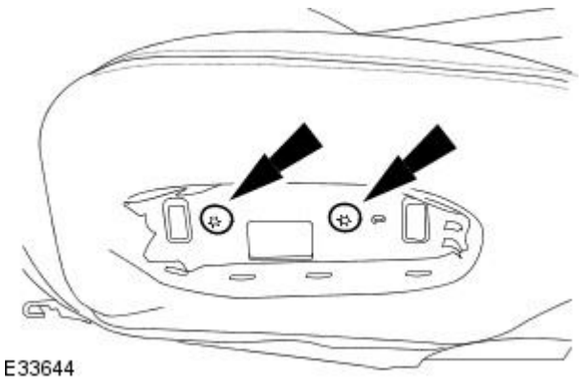

9. Install the seat control switch housing retaining screws.

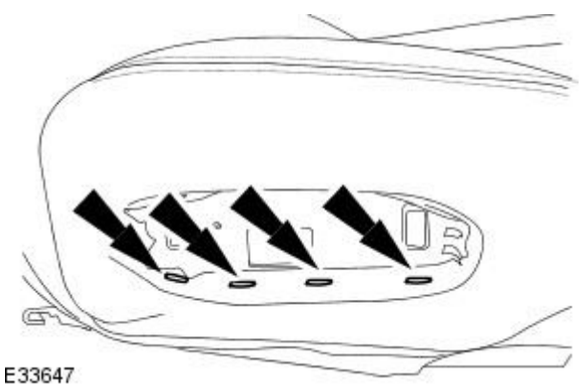

10. NOTE: Install new staples.

Attach the front seat cushion cover.

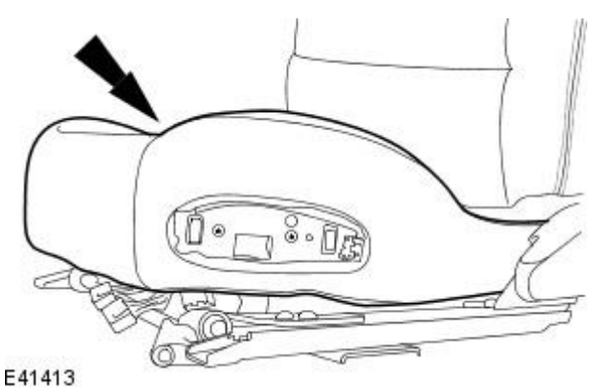

11. Install the front seat cushion to the seat base.

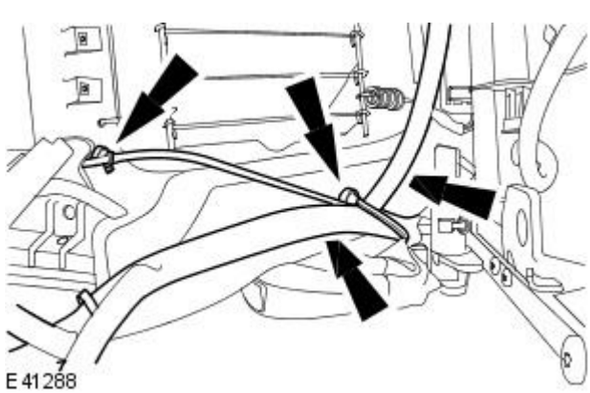

12. Attach the seat wiring harness.

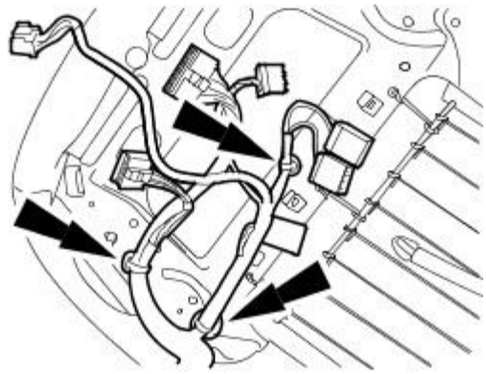

E33641

13. Attach the seat wiring harness.

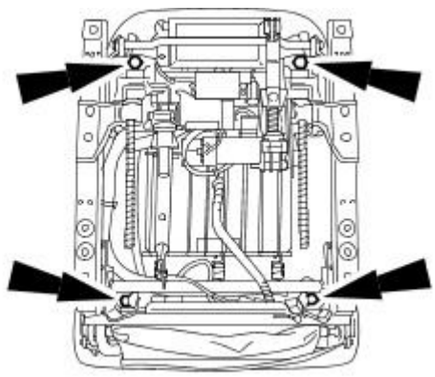

E33633

14. Install the seat base retaining nuts.

- Tighten to 18 Nm.

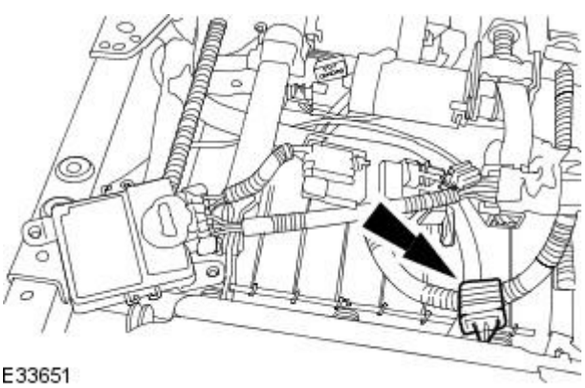

E33651

15. Insulate and secure the unused front passenger seat occupant classification sensor electrical connector to the seat frame.

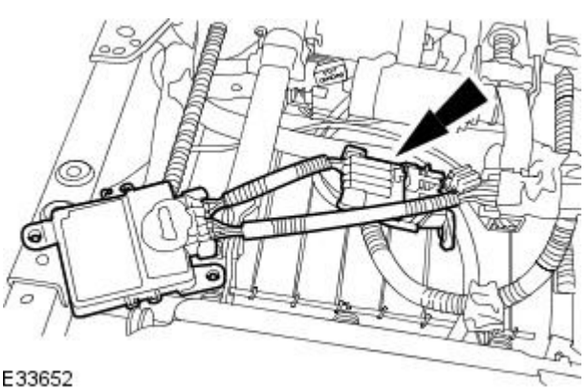

E33652

16. Connect the front passenger seat occupant classification sensor control module harness wiring electrical connector.

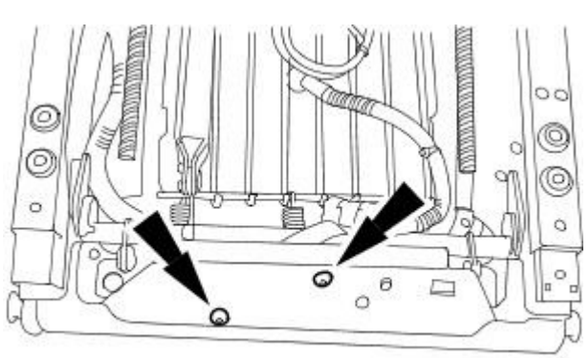

E33636

17. NOTE: Install new rivets.

Install the front passenger seat occupant classification sensor control module and attach the electrical connector to the seat kickplate.

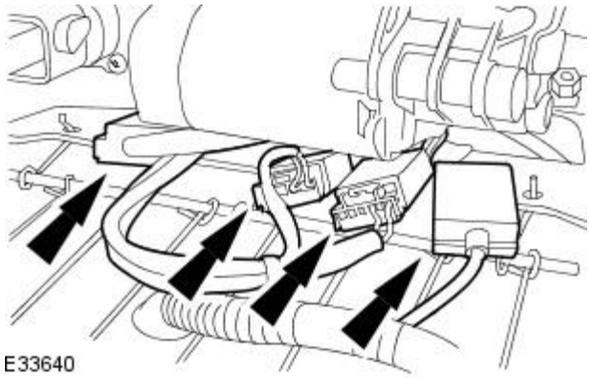
E33640

18. Connect the electrical connectors.

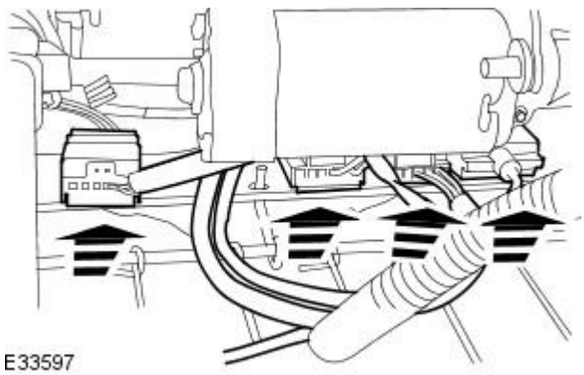
E33597

19. Attach the electrical connectors.

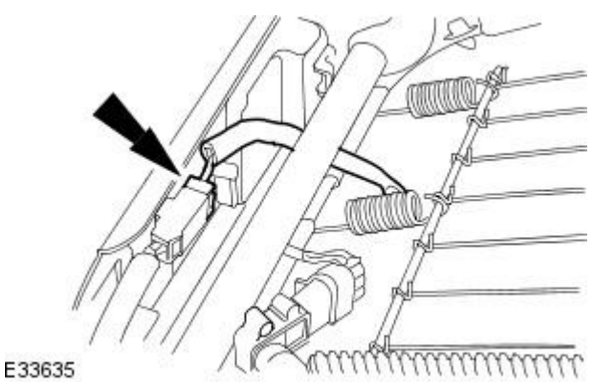
E33635

20. Connect the front seat cushion heater mat electrical connector.

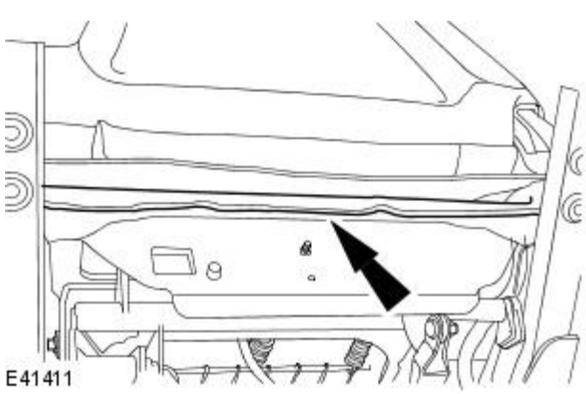
E41411

21. Attach the front seat cushion cover to the seat base.

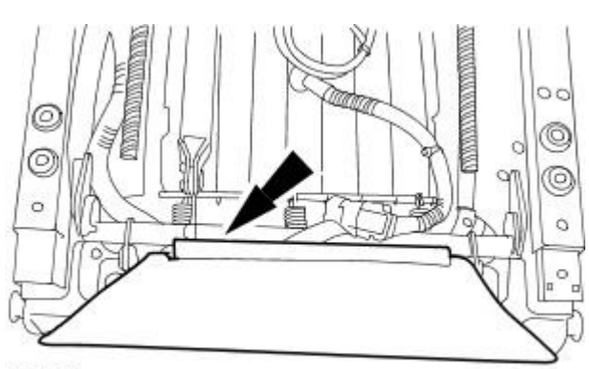
E33634

22. Attach the lower finish panel.

23. Install the seat control switch.
For additional information, refer to Section 501-10 Seating.

24. Install the PSM.
For additional information, refer to Section 419-10 Multifunction Electronic Modules.

25. Install the front passenger seat.
For additional information, refer to Section 501-10 Seating.
.

26. Initialize the system. For additional information, refer to the Jaguar approved diagnostic system.

Supplemental Restraint System - Front Passenger Seat Occupant Position Sensor

Removal and Installation

Removal

• WARNINGS:

BEFORE ANY AIR BAG/SRS SERVICE IS PERFORMED, AT LEAST ONE MINUTE MUST ELAPSE AFTER DISCONNECTION OF THE BATTERY POSITIVE CABLE TO ALLOW DISSIPATION OF BACK-UP POWER SUPPLY ENERGY.

Never probe the electrical connectors of the air bag modules or any other SRS component. Failure to follow this instruction may result in personal injury.

1. Disconnect the battery ground cable.
   For additional information, refer to Section 414-01 Battery, Mounting and Cables.
2. Remove the overhead console.
   For additional information, refer to Section 501-12 Instrument Panel and Console.
3. Detach the overhead console map reading lamp control module.

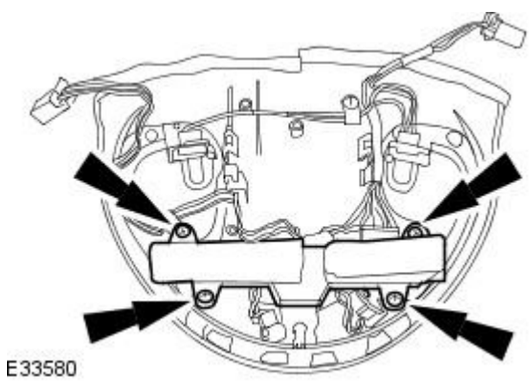

E33580

4. Remove the front passenger occupant position sensor.

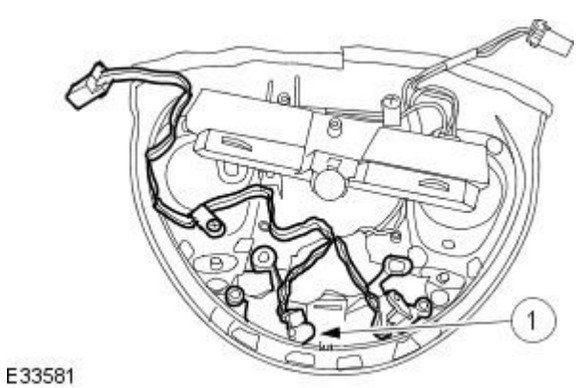

E33581

Installation

1. To install, reverse the removal procedure.

Supplemental Restraint System - Passenger Air Bag Deactivation (PAD) Indicator

Removal and Installation

Removal

• WARNINGS:

BEFORE ANY AIR BAG/SRS SERVICE IS PERFORMED, AT LEAST ONE MINUTE MUST ELAPSE AFTER DISCONNECTION OF THE BATTERY POSITIVE CABLE TO ALLOW DISSIPATION OF BACK-UP POWER SUPPLY ENERGY.

IN THE EVENT OF A FAULT RUPTURING THE 10A BATTERY SUPPLY FUSE (F4 LOCATED IN THE FUSE BOX AT THE DRIVER'S END OF THE FASCIA) THE FUSE MUST NOT BE RENEWED UNTIL THE AIR BAG/SRS SYSTEM HAS BEEN DE-ACTIVATED. FUSES OF ANY OTHER VALUE MUST NEVER BE USED AS THIS CAN CAUSE DISARM FAILURE.

AN ECS OR RCM MODULE ONLY REQUIRES REPLACEMENT IF THE SYSTEM HAS INCURRED FIVE SEPARATE DEPLOYMENTS. AT NO TIME CHANGE ECS OR RCM FOR LESS THAN FIVE SEPARATE DEPLOYMENTS.

ALWAYS WEAR SAFETY GLASSES WHEN REPAIRING AN AIR BAG SUPPLEMENTAL RESTRAINT SYSTEM (SRS) VEHICLE AND WHEN HANDLING AN AIR BAG MODULE. FAILURE TO FOLLOW THIS INSTRUCTION MAY RESULT IN PERSONAL INJURY.

NEVER PROBE THE CONNECTORS ON THE AIR BAG MODULE. DOING SO MAY RESULT IN AIR BAG DEPLOYMENT. FAILURE TO FOLLOW THIS INSTRUCTION MAY RESULT IN PERSONAL INJURY.

AIR BAG MODULES WITH DISCOLORED OR DAMAGED TRIM COVERS MUST BE REPLACED.

VEHICLE SENSOR ORIENTATION IS CRITICAL FOR CORRECT SYSTEM OPERATION. IF A VEHICLE EQUIPPED WITH AN AIR BAG SUPPLEMENTAL RESTRAINT SYSTEM (SRS) IS INVOLVED IN A COLLISION, INSPECT THE SENSOR MOUNTING BRACKET AND WIRING PIGTAIL FOR DEFORMATION. IF DAMAGED, INSTALL A NEW SENSOR WHETHER OR NOT THE AIR BAG IS DEPLOYED. IF THE BODY WORK IS DAMAGED THIS WILL HAVE TO BE ADDRESSED.

TO AVOID ACCIDENTAL DEPLOYMENT AND POSSIBLE PERSONAL INJURY, THE BACKUP POWER SUPPLY MUST BE DEPLETED BEFORE REPAIRING OR REPLACING ANY AIR BAG SUPPLEMENTAL RESTRAINT SYSTEM (SRS) COMPONENTS. TO DEPLETE THE BACKUP POWER SUPPLY ENERGY, DISCONNECT THE BATTERY GROUND CABLE AND WAIT ONE MINUTE. FAILURE TO FOLLOW THIS INSTRUCTION MAY RESULT IN PERSONAL INJURY.

• NOTE: Repair is made by replacement only. If a part is replaced and the new part does not correct the condition, install the original part and carry out the diagnostic procedure again.

1. Disconnect the battery ground cable.
   For additional information, refer to Section 414-01 Battery, Mounting and Cables.
2. Open the glove compartment.

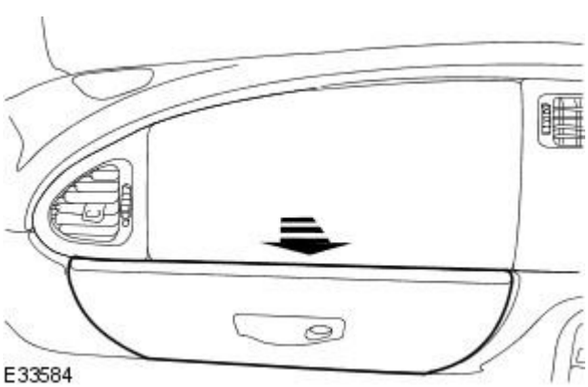

3. Detach the passenger air bag module finish panel.

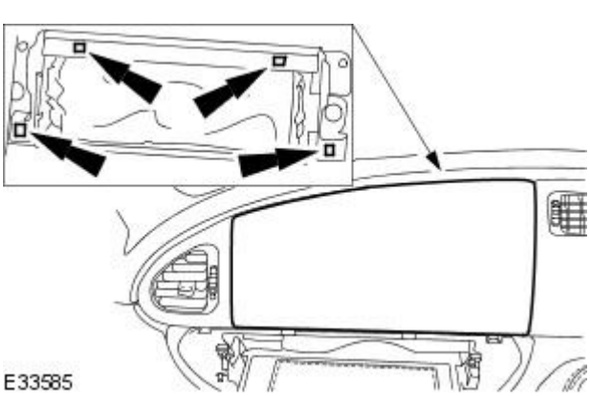

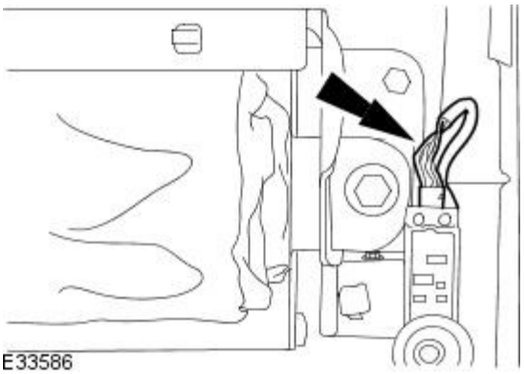

4. Disconnect the passenger air bag deactivation (PAD) indicator electrical connector.

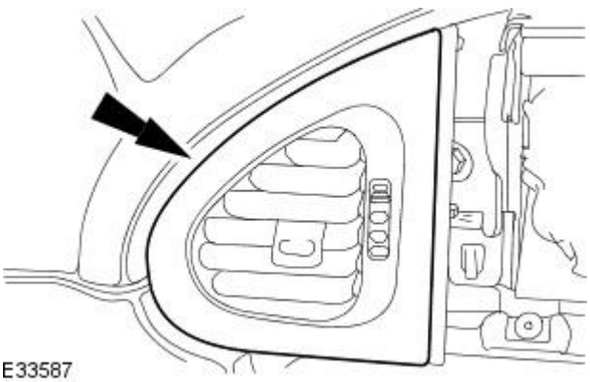

5. Remove the passenger side register finish panel.

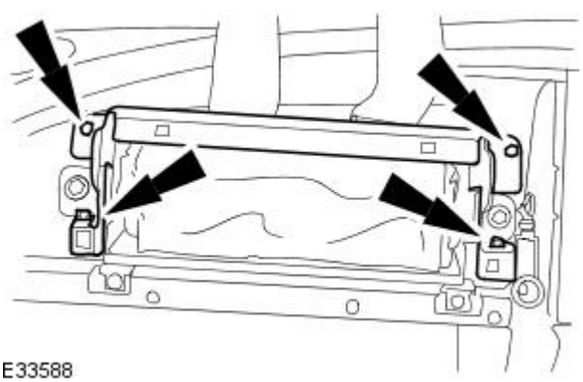

6. Remove the passenger air bag module finish panel mounting bracket.

- Remove and discard the passenger air bag module finish panel mounting bracket retaining bolts.

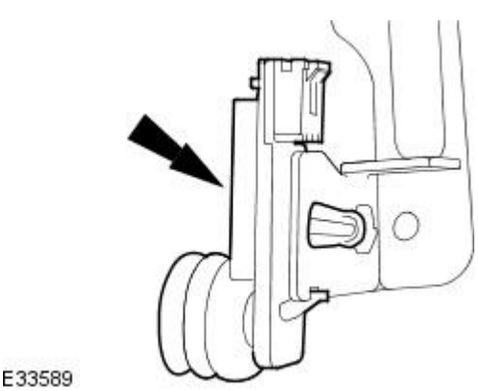

7. Remove the PAD indictor.

Installation

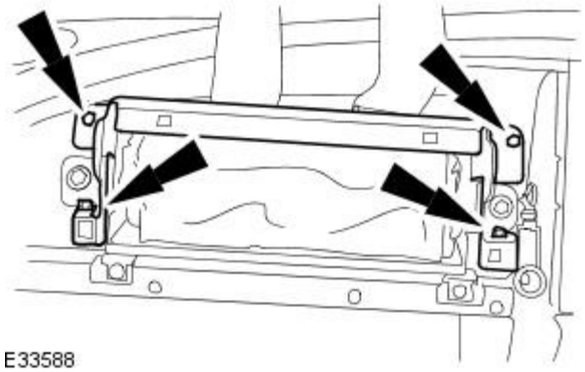

1. NOTE: Install new retaining bolts.

To install, reverse the removal procedure.

- Tighten to 3 Nm.

Supplemental Restraint System - Passenger Air Bag Module

Removal and Installation

Removal

• WARNINGS:

BEFORE ANY AIR BAG/SRS SERVICE IS PERFORMED, AT LEAST ONE MINUTE MUST ELAPSE AFTER DISCONNECTION OF THE BATTERY POSITIVE CABLE TO ALLOW DISSIPATION OF BACK-UP POWER SUPPLY ENERGY.

IN THE EVENT OF A FAULT RUPTURING THE 10A BATTERY SUPPLY FUSE (F4 LOCATED IN THE FUSE BOX AT THE DRIVER'S END OF THE FASCIA) THE FUSE MUST NOT BE RENEWED UNTIL THE AIR BAG/SRS SYSTEM HAS BEEN DE-ACTIVATED. FUSES OF ANY OTHER VALUE MUST NEVER BE USED AS THIS CAN CAUSE DISARM FAILURE.

FOLLOWING TEN YEARS IN SERVICE, AN AIR BAG ASSEMBLY MUST BE REMOVED AND DISPOSED OF IN THE APPROVED MANNER AND A NEW AIR BAG MUST BE INSTALLED.

AN ECS OR RCM MODULE ONLY REQUIRES REPLACEMENT IF THE SYSTEM HAS INCURRED FIVE SEPARATE DEPLOYMENTS. AT NO TIME CHANGE ECS OR RCM FOR LESS THAN FIVE SEPARATE DEPLOYMENTS.

ALWAYS WEAR SAFETY GLASSES WHEN REPAIRING AN AIR BAG SUPPLEMENTAL RESTRAINT SYSTEM (SRS) VEHICLE AND WHEN HANDLING AN AIR BAG MODULE. FAILURE TO FOLLOW THIS INSTRUCTION MAY RESULT IN PERSONAL INJURY.

CARRY A LIVE AIR BAG MODULE WITH THE AIR BAG AND TRIM COVER POINTED AWAY FROM YOUR BODY. THIS WILL REDUCE THE RISK OF INJURY IN THE EVENT OF AN ACCIDENTAL DEPLOYMENT. FAILURE TO FOLLOW THIS INSTRUCTION MAY RESULT IN PERSONAL INJURY.

DO NOT SET A LIVE AIR BAG MODULE DOWN WITH THE TRIM COVER FACE DOWN. FAILURE TO FOLLOW THIS INSTRUCTION MAY RESULT IN PERSONAL INJURY.

AFTER DEPLOYMENT, THE AIR BAG SURFACE CAN CONTAIN DEPOSITS OF SODIUM HYDROXIDE, A PRODUCT OF THE GAS GENERATED DURING COMBUSTION THAT IS IRRITATING TO THE SKIN. WASH YOUR HANDS WITH SOAP AND WATER AFTERWARDS. FAILURE TO FOLLOW THIS INSTRUCTION MAY RESULT IN PERSONAL INJURY.

NEVER PROBE THE CONNECTORS ON THE AIR BAG MODULE. DOING SO MAY RESULT IN AIR BAG DEPLOYMENT. FAILURE TO FOLLOW THIS INSTRUCTION MAY RESULT IN PERSONAL INJURY.

AIR BAG MODULES WITH DISCOLORED OR DAMAGED TRIM COVERS MUST BE REPLACED.

VEHICLE SENSOR ORIENTATION IS CRITICAL FOR CORRECT SYSTEM OPERATION. IF A VEHICLE EQUIPPED WITH AN AIR BAG SUPPLEMENTAL RESTRAINT SYSTEM (SRS) IS INVOLVED IN A COLLISION, INSPECT THE SENSOR MOUNTING BRACKET AND WIRING PIGTAIL FOR DEFORMATION. IF DAMAGED, INSTALL A NEW SENSOR WHETHER OR NOT THE AIR BAG IS DEPLOYED. IF THE BODY WORK IS DAMAGED THIS WILL HAVE TO BE ADDRESSED.

TO AVOID ACCIDENTAL DEPLOYMENT AND POSSIBLE PERSONAL INJURY, THE BACKUP POWER SUPPLY MUST BE DEPLETED BEFORE REPAIRING OR REPLACING ANY AIR BAG SUPPLEMENTAL RESTRAINT SYSTEM (SRS) COMPONENTS. TO DEPLETE THE BACKUP POWER SUPPLY ENERGY, DISCONNECT THE BATTERY GROUND CABLE AND WAIT ONE MINUTE. FAILURE TO FOLLOW THIS INSTRUCTION MAY RESULT IN PERSONAL INJURY.

• NOTE: Repair is made by replacement only. If a part is replaced and the new part does not correct the condition, install the original part and carry out the diagnostic procedure again.

• NOTE: When installing a new air bag module, a prepaid return postcard is provided with the replacement air bag module. The serial number for the new part and the vehicle identification number (VIN) must be recorded and sent to Jaguar Cars Ltd.

1. Disconnect the battery ground cable.
   For additional information, refer to Section 414-01 Battery, Mounting and Cables.
2. Remove the glove compartment.
   For additional information, refer to Section 501-12 Instrument Panel and Console.

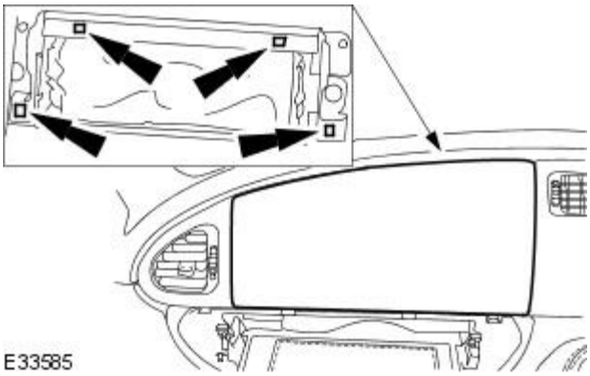

3. Detach the passenger air bag module finish panel.

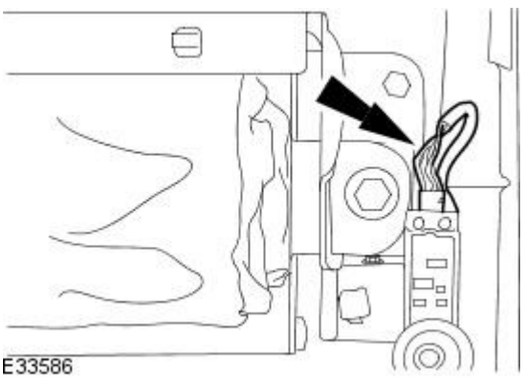

4. Disconnect the passenger air bag deactivation (PAD) indicator electrical connector.

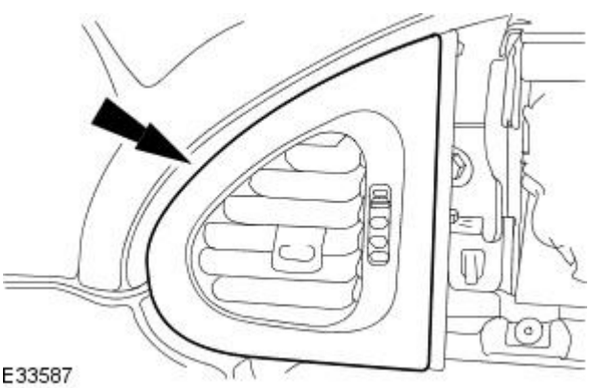

5. Remove the passenger side register finish panel.

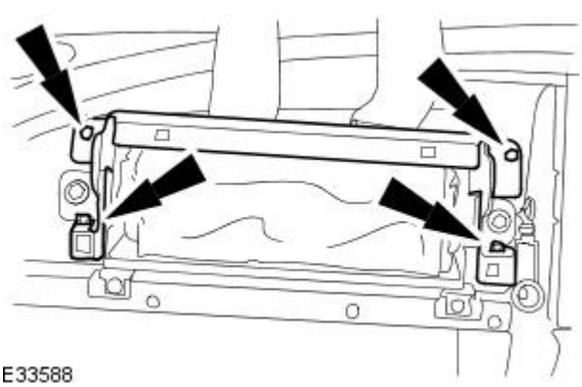

6. Remove the passenger air bag module finish panel mounting bracket.

- Remove and discard the retaining bolts.

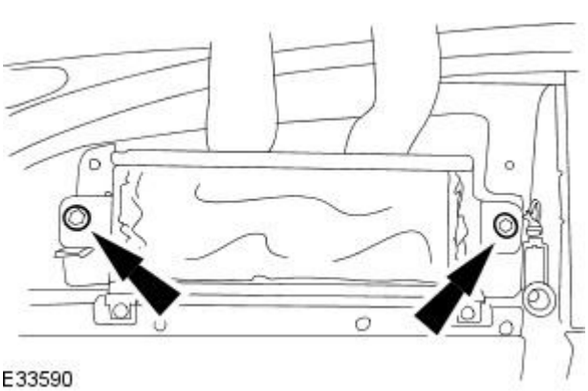

7. Remove and discard the passenger air bag module retaining bolts.

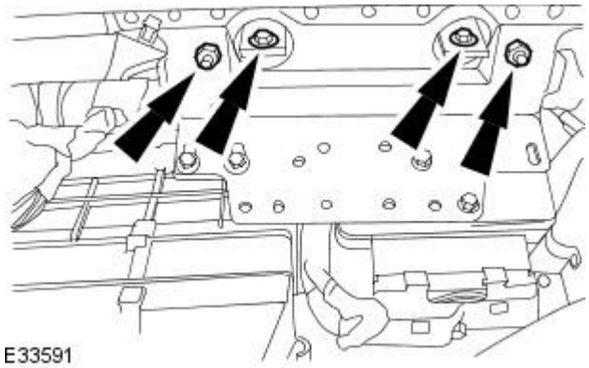

8. Detach the passenger air bag module.

- Remove and discard the retaining nuts and bolts.

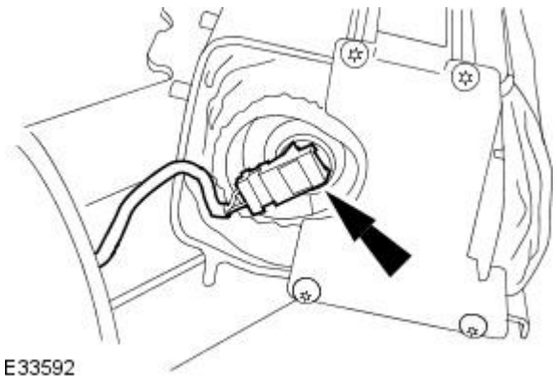

9. Disconnect the passenger air bag module left-hand electrical connector.

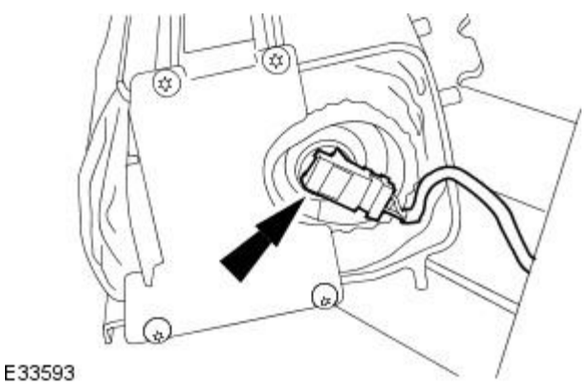

10. Remove the passenger air bag module.

- Disconnect the right-hand electrical connector.

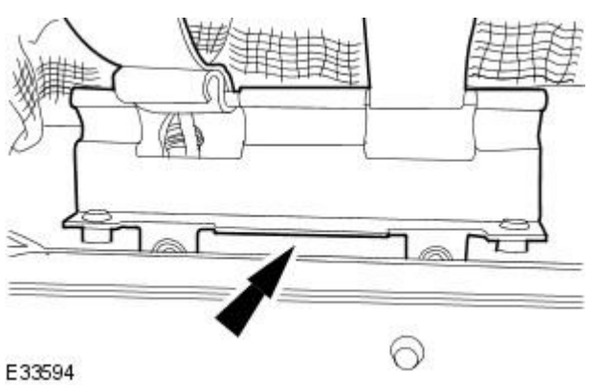

11. Remove the passenger air bag module mounting bracket.

Installation

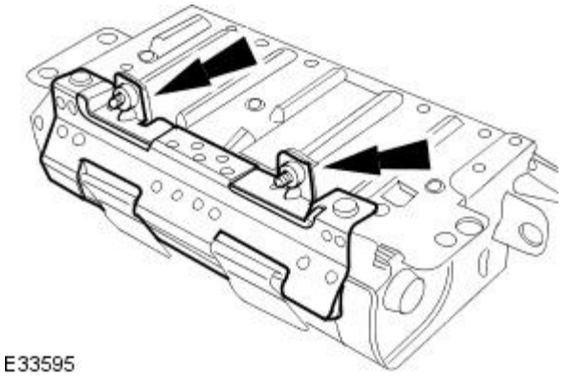

E33595

1. NOTE: Install new retaining bolts.

Install the passenger air bag module to the mounting bracket.

- Tighten to 9 Nm.

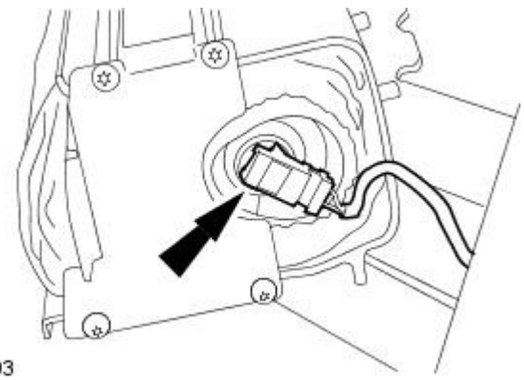

E33593

2. Connect the passenger air bag module right-hand electrical connector.

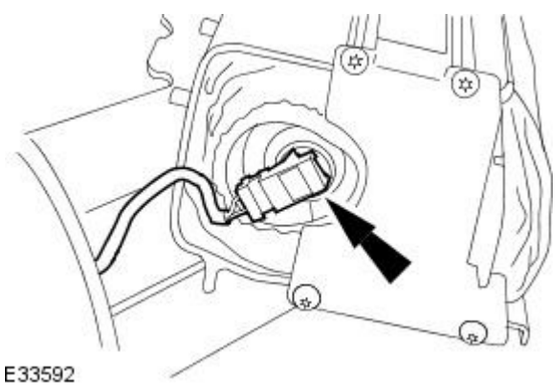

E33592

3. Connect the passenger air bag module left-hand electrical connector.

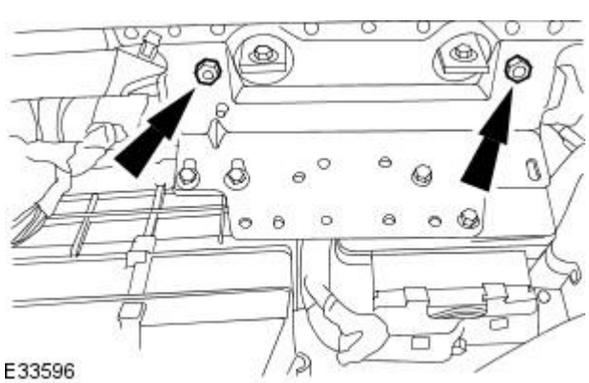

E33596

4. NOTE: Install new retaining nuts.

Install the passenger air bag module.

- Tighten to 9 Nm.

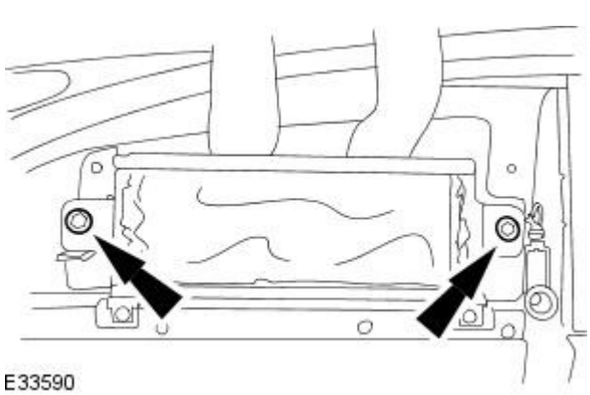

E33590

5. Install new passenger air bag module retaining bolts.

- Tighten to 9 Nm.

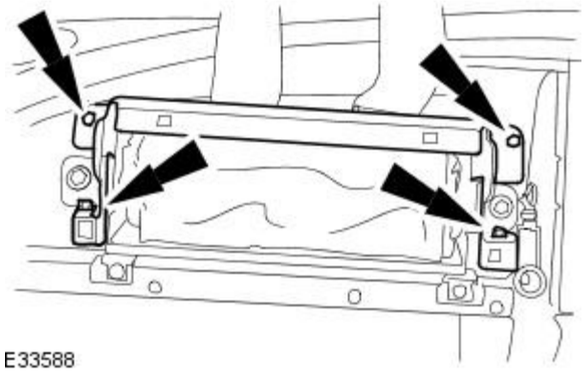

6. NOTE: Install new retaining bolts.

Install the passenger air bag module finish panel mounting bracket.

- Tighten to 3 Nm.

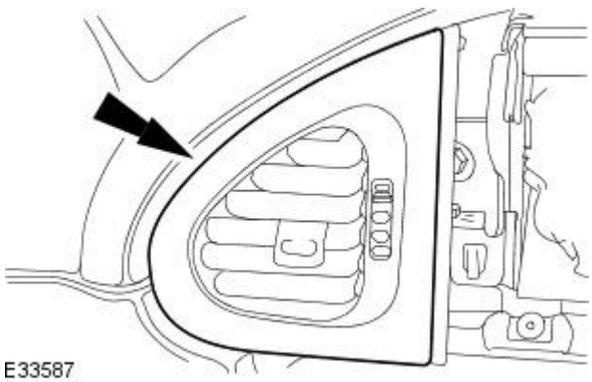

7. Install the passenger side register finish panel.

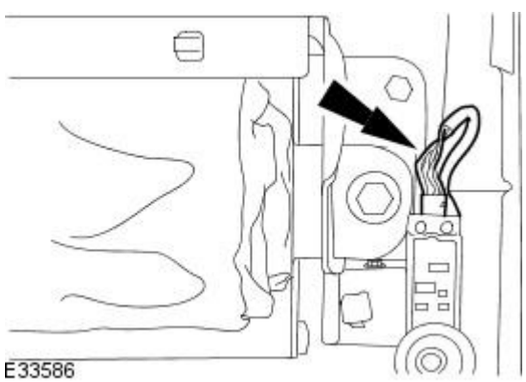

8. Connect the PAD indicator electrical connector.

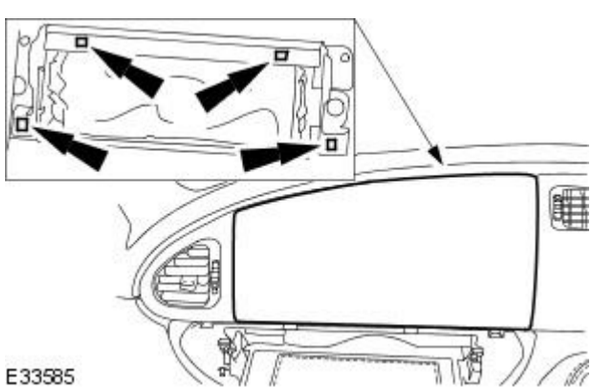

9. Attach the passenger air bag module finish panel.

10. Install the glove compartment.
For additional information, refer to Section 501-12 Instrument Panel and Console.

11. Connect the battery ground cable.
For additional information, refer to Section 414-01 Battery, Mounting and Cables.

Supplemental Restraint System - Restraints Control Module (RCM)

Removal and Installation

Removal

• WARNINGS:

BEFORE ANY AIR BAG/SRS SERVICE IS PERFORMED, AT LEAST ONE MINUTE MUST ELAPSE AFTER DISCONNECTION OF THE BATTERY POSITIVE CABLE TO ALLOW DISSIPATION OF BACK-UP POWER SUPPLY ENERGY.

IN THE EVENT OF A FAULT RUPTURING THE 10A BATTERY SUPPLY FUSE (F4 LOCATED IN THE FUSE BOX AT THE DRIVER'S END OF THE FASCIA) THE FUSE MUST NOT BE RENEWED UNTIL THE AIR BAG/SRS SYSTEM HAS BEEN DE-ACTIVATED. FUSES OF ANY OTHER VALUE MUST NEVER BE USED AS THIS CAN CAUSE DISARM FAILURE.

AN ECS OR RCM MODULE ONLY REQUIRES REPLACEMENT IF THE SYSTEM HAS INCURRED FIVE SEPARATE DEPLOYMENTS. AT NO TIME CHANGE ECS OR RCM FOR LESS THAN FIVE SEPARATE DEPLOYMENTS.

ALWAYS WEAR SAFETY GLASSES WHEN REPAIRING AN AIR BAG SUPPLEMENTAL RESTRAINT SYSTEM (SRS) VEHICLE AND WHEN HANDLING AN AIR BAG MODULE. FAILURE TO FOLLOW THIS INSTRUCTION MAY RESULT IN PERSONAL INJURY.

NEVER PROBE THE CONNECTORS ON THE AIR BAG MODULE. DOING SO MAY RESULT IN AIR BAG DEPLOYMENT. FAILURE TO FOLLOW THIS INSTRUCTION MAY RESULT IN PERSONAL INJURY.

VEHICLE SENSOR ORIENTATION IS CRITICAL FOR CORRECT SYSTEM OPERATION. IF A VEHICLE EQUIPPED WITH AN AIR BAG SUPPLEMENTAL RESTRAINT SYSTEM (SRS) IS INVOLVED IN A COLLISION, INSPECT THE SENSOR MOUNTING BRACKET AND WIRING PIGTAIL FOR DEFORMATION. IF DAMAGED, INSTALL A NEW SENSOR WHETHER OR NOT THE AIR BAG IS DEPLOYED. IF THE BODY WORK IS DAMAGED THIS WILL HAVE TO BE ADDRESSED.

TO AVOID ACCIDENTAL DEPLOYMENT AND POSSIBLE PERSONAL INJURY, THE BACKUP POWER SUPPLY MUST BE DEPLETED BEFORE REPAIRING OR REPLACING ANY AIR BAG SUPPLEMENTAL RESTRAINT SYSTEM (SRS) COMPONENTS. TO DEPLETE THE BACKUP POWER SUPPLY ENERGY, DISCONNECT THE BATTERY GROUND CABLE AND WAIT ONE MINUTE. FAILURE TO FOLLOW THIS INSTRUCTION MAY RESULT IN PERSONAL INJURY.

• NOTE: Repair is made by replacement only. If a part is replaced and the new part does not correct the condition, install the original part and carry out the diagnostic procedure again.

• NOTE: When installing a new air bag module, a prepaid return postcard is provided with the replacement air bag module. The serial number for the new part and the vehicle identification number (VIN) must be recorded and sent to Jaguar Cars Ltd.

1. Disconnect the battery ground cable.
For additional information, refer to Section 414-01 Battery, Mounting and Cables.

2. Remove the cellular phone handset.

1. Detach the cellular phone handset.
2. Remove the cellular phone handset.

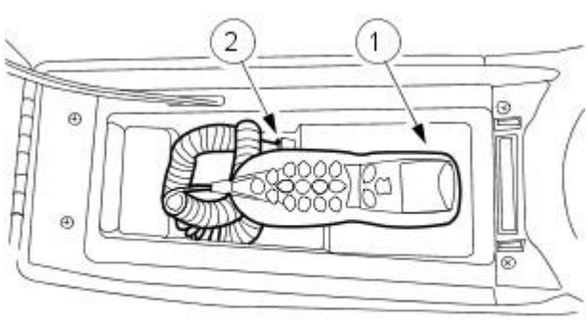

E33568

3. Remove the cellular phone handset holder.

1. Release the retaining tangs.
2. Remove the cellular phone handset holder.

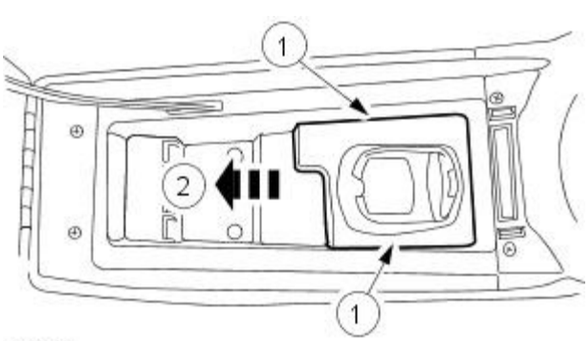

E33569

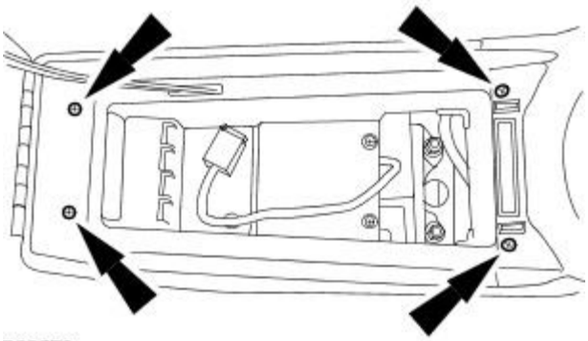

E33570

4. Remove the cellular phone handset housing.

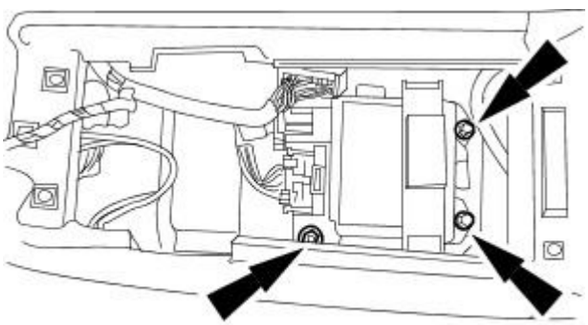

E33571

5. Detach the restraints control module (RCM).

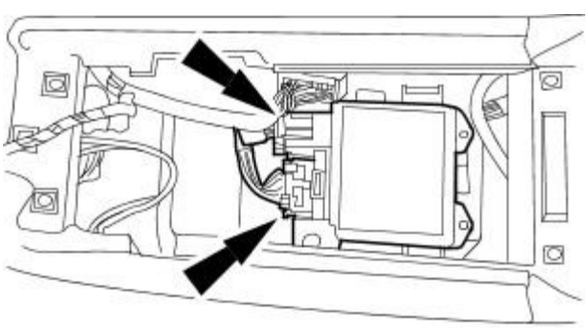

E33572

6. Remove the RCM.

- Disconnect the RCM electrical connectors.

Installation

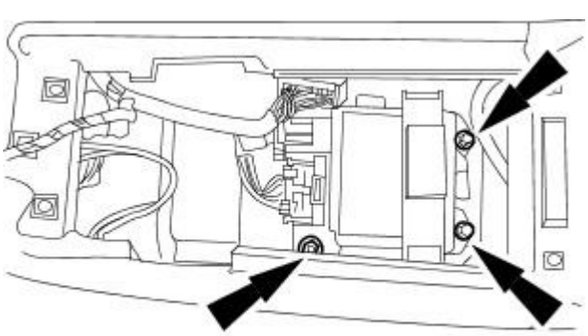

E33571

1. To install, reverse the removal procedure.

- Tighten to 12 Nm.

Supplemental Restraint System - Seat Position Sensor

Removal and Installation

Removal

• WARNINGS:

BEFORE ANY AIR BAG/SRS SERVICE IS PERFORMED, AT LEAST ONE MINUTE MUST ELAPSE AFTER DISCONNECTION OF THE BATTERY POSITIVE CABLE TO ALLOW DISSIPATION OF BACK-UP POWER SUPPLY ENERGY.

Never probe the electrical connectors of the air bag modules or any other SRS component. Failure to follow this instruction may result in personal injury.

CAUTION: Electronic components in the seats are sensitive to impact. Handle the seat with care. Failure to follow this instruction may result in damage to the vehicle.

1. Remove the driver seat.
For additional information, refer to Section 501-10 Seating.

2. Detach the seat position sensor electrical connector.

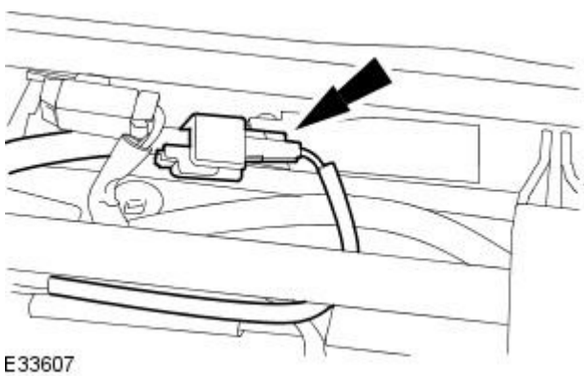

E33607

3. Disconnect the seat position sensor electrical connector.

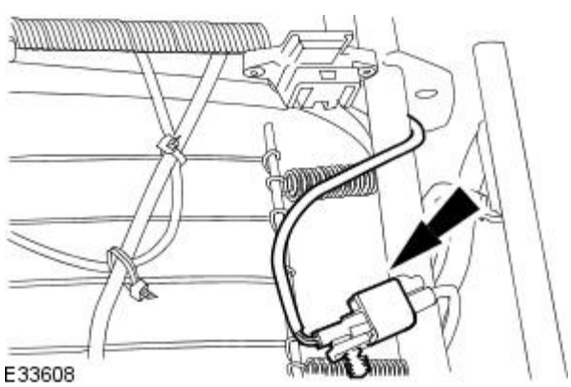

E33608

4. Remove the seat position sensor.

- Remove and discard the rivets.

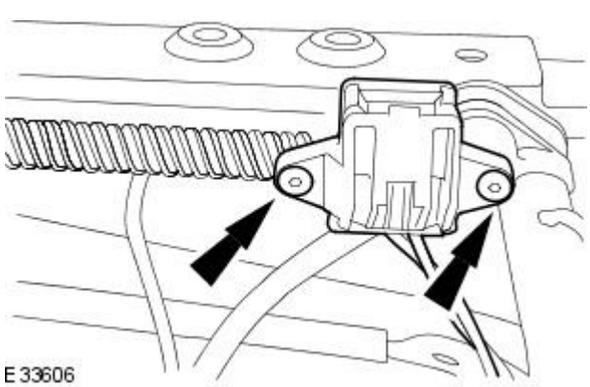

E33606

Installation

1. NOTE: Install new rivets.

To install, reverse the removal procedure.

Supplemental Restraint System - Side Air Bag ModuleVehicles Without: Recaro Seats

Removal and Installation

Removal

• WARNINGS:

BEFORE ANY AIR BAG/SRS SERVICE IS PERFORMED, AT LEAST ONE MINUTE MUST ELAPSE AFTER DISCONNECTION OF THE BATTERY POSITIVE CABLE TO ALLOW DISSIPATION OF BACK-UP POWER SUPPLY ENERGY.

IN THE EVENT OF A FAULT RUPTURING THE 10A BATTERY SUPPLY FUSE (F4 LOCATED IN THE FUSE BOX AT THE DRIVER'S END OF THE FASCIA) THE FUSE MUST NOT BE RENEWED UNTIL THE AIR BAG/SRS SYSTEM HAS BEEN DE-ACTIVATED. FUSES OF ANY OTHER VALUE MUST NEVER BE USED AS THIS CAN CAUSE DISARM FAILURE.

FOLLOWING TEN YEARS IN SERVICE, AN AIR BAG ASSEMBLY MUST BE REMOVED AND DISPOSED OF IN THE APPROVED MANNER AND A NEW AIR BAG MUST BE INSTALLED.

AN ECS OR RCM MODULE ONLY REQUIRES REPLACEMENT IF THE SYSTEM HAS INCURRED FIVE SEPARATE DEPLOYMENTS. AT NO TIME CHANGE ECS OR RCM FOR LESS THAN FIVE SEPARATE DEPLOYMENTS.

ALWAYS WEAR SAFETY GLASSES WHEN REPAIRING AN AIR BAG SUPPLEMENTAL RESTRAINT SYSTEM (SRS) VEHICLE AND WHEN HANDLING AN AIR BAG MODULE. FAILURE TO FOLLOW THIS INSTRUCTION MAY RESULT IN PERSONAL INJURY.

AFTER DEPLOYMENT, THE AIR BAG SURFACE CAN CONTAIN DEPOSITS OF SODIUM HYDROXIDE, A PRODUCT OF THE GAS GENERATED DURING COMBUSTION THAT IS IRRITATING TO THE SKIN. WASH YOUR HANDS WITH SOAP AND WATER AFTERWARDS. FAILURE TO FOLLOW THIS INSTRUCTION MAY RESULT IN PERSONAL INJURY.

NEVER PROBE THE CONNECTORS ON THE AIR BAG MODULE. DOING SO MAY RESULT IN AIR BAG DEPLOYMENT. FAILURE TO FOLLOW THIS INSTRUCTION MAY RESULT IN PERSONAL INJURY.

AIR BAG MODULES WITH DISCOLORED OR DAMAGED TRIM COVERS MUST BE REPLACED.

VEHICLE SENSOR ORIENTATION IS CRITICAL FOR CORRECT SYSTEM OPERATION. IF A VEHICLE EQUIPPED WITH AN AIR BAG SUPPLEMENTAL RESTRAINT SYSTEM (SRS) IS INVOLVED IN A COLLISION, INSPECT THE SENSOR MOUNTING BRACKET AND WIRING PIGTAIL FOR DEFORMATION. IF DAMAGED, INSTALL A NEW SENSOR WHETHER OR NOT THE AIR BAG IS DEPLOYED. IF THE BODY WORK IS DAMAGED THIS WILL HAVE TO BE ADDRESSED.

TO AVOID ACCIDENTAL DEPLOYMENT AND POSSIBLE PERSONAL INJURY, THE BACKUP POWER SUPPLY MUST BE DEPLETED BEFORE REPAIRING OR REPLACING ANY AIR BAG SUPPLEMENTAL RESTRAINT SYSTEM (SRS) COMPONENTS. TO DEPLETE THE BACKUP POWER SUPPLY ENERGY, DISCONNECT THE BATTERY GROUND CABLE AND WAIT ONE MINUTE. FAILURE TO FOLLOW THIS INSTRUCTION MAY RESULT IN PERSONAL INJURY.

• NOTE: Repair is made by replacement only. If a part is replaced and the new part does not correct the condition, install the original part and carry out the diagnostic procedure again.

• NOTE: When installing a new air bag module, a prepaid return postcard is provided with the replacement air bag module. The serial number for the new part and the vehicle identification number (VIN) must be recorded and sent to Jaguar Cars Ltd.

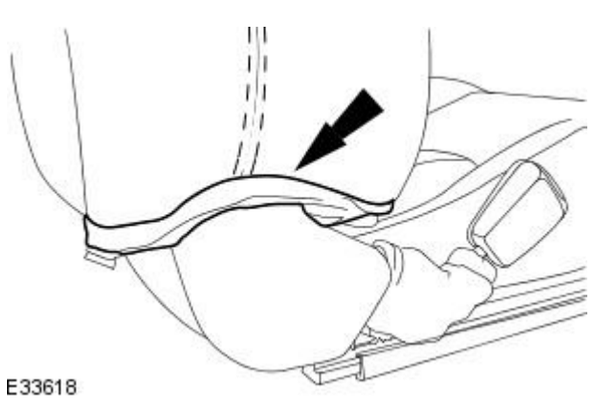

1. Remove the front seat.
   For additional information, refer to Section 501-10 Seating.
2. Reposition the front seat backrest hinge cover.

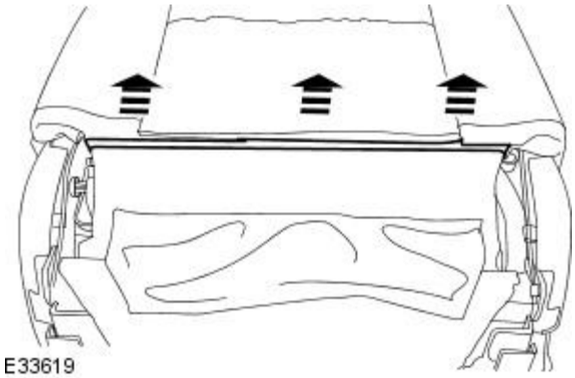
E33619

3. Release the front seat backrest cover rear lower retaining clips.

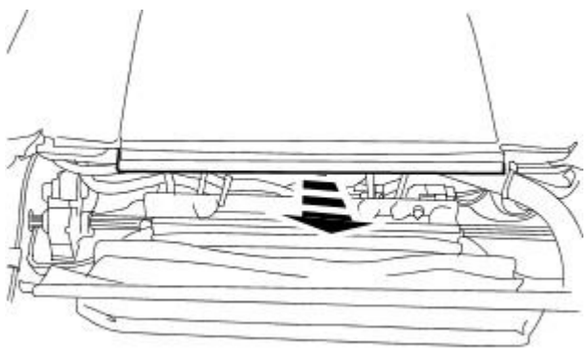
E33620

4. Remove the front seat backrest support panel.

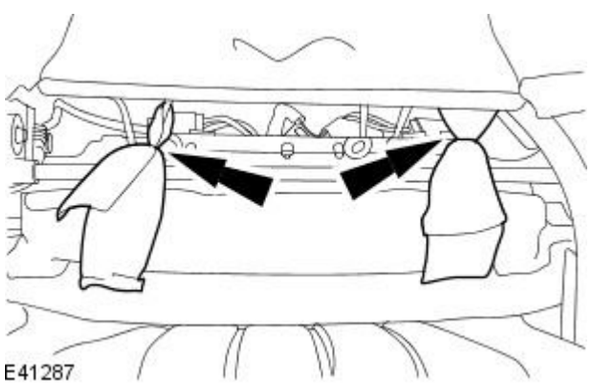
E41287

5. Release the front seat backrest cover lower retaining straps.

- Remove and discard the hog rings.

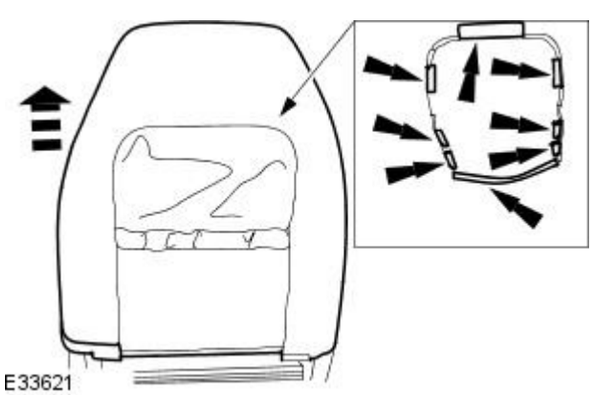
E33621

6. Reposition the front seat backrest cover.

- Release the front seat backrest cover internal retaining clips.

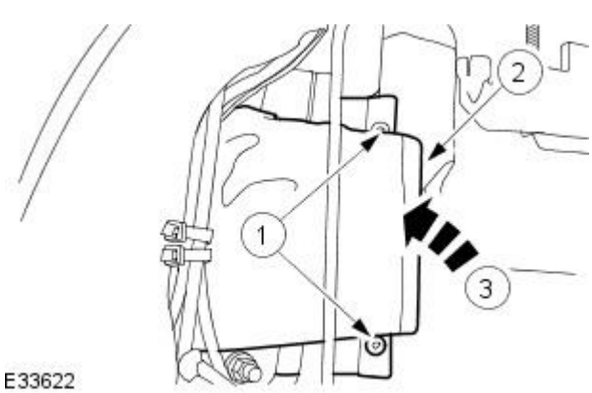

E33622

7. Reposition the side air bag module chute.

1. Remove and discard the rivets.
2. Release the side air bag module chute retaining clip.
3. Reposition the side air bag module chute.

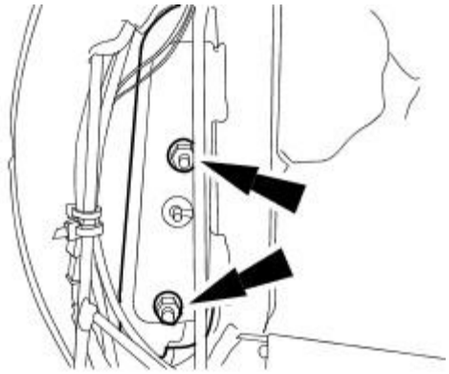

8. Detach the side air bag module.

- Remove and discard the retaining nuts.

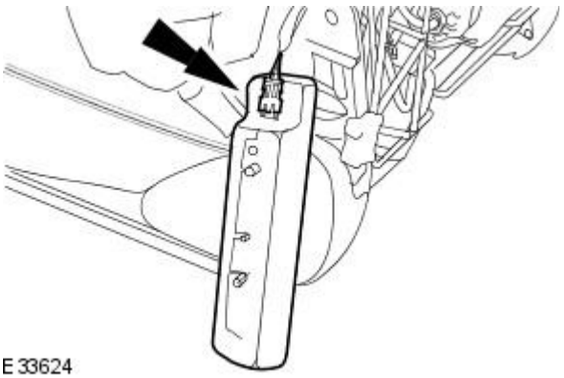

9. Remove the side air bag module.

- Disconnect the electrical connector.

Installation

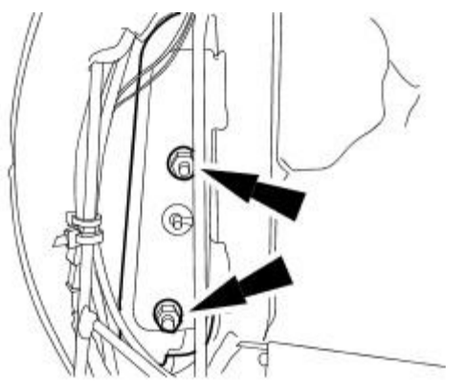

1. To install, reverse the removal procedure.

- NOTE: Install new side air bag module chute retaining rivets.
- NOTE: Install new retaining nuts.

- Tighten to 7 Nm.

Supplemental Restraint System - Side Air Bag ModuleVehicles With: Recaro Seats

Removal and Installation

Removal

• WARNINGS:

BEFORE ANY AIR BAG/SRS SERVICE IS PERFORMED, AT LEAST ONE MINUTE MUST ELAPSE AFTER DISCONNECTION OF THE BATTERY POSITIVE CABLE TO ALLOW DISSIPATION OF BACK-UP POWER SUPPLY ENERGY.

IN THE EVENT OF A FAULT RUPTURING THE 10A BATTERY SUPPLY FUSE (F4 LOCATED IN THE FUSE BOX AT THE DRIVER'S END OF THE FASCIA) THE FUSE MUST NOT BE RENEWED UNTIL THE AIR BAG/SRS SYSTEM HAS BEEN DE-ACTIVATED. FUSES OF ANY OTHER VALUE MUST NEVER BE USED AS THIS CAN CAUSE DISARM FAILURE.

FOLLOWING TEN YEARS IN SERVICE, AN AIR BAG ASSEMBLY MUST BE REMOVED AND DISPOSED OF IN THE APPROVED MANNER AND A NEW AIR BAG MUST BE INSTALLED.

AN ECS OR RCM MODULE ONLY REQUIRES REPLACEMENT IF THE SYSTEM HAS INCURRED FIVE SEPARATE DEPLOYMENTS. AT NO TIME CHANGE ECS OR RCM FOR LESS THAN FIVE SEPARATE DEPLOYMENTS.

ALWAYS WEAR SAFETY GLASSES WHEN REPAIRING AN AIR BAG SUPPLEMENTAL RESTRAINT SYSTEM (SRS) VEHICLE AND WHEN HANDLING AN AIR BAG MODULE. FAILURE TO FOLLOW THIS INSTRUCTION MAY RESULT IN PERSONAL INJURY.

AFTER DEPLOYMENT, THE AIR BAG SURFACE CAN CONTAIN DEPOSITS OF SODIUM HYDROXIDE, A PRODUCT OF THE GAS GENERATED DURING COMBUSTION THAT IS IRRITATING TO THE SKIN. WASH YOUR HANDS WITH SOAP AND WATER AFTERWARDS. FAILURE TO FOLLOW THIS INSTRUCTION MAY RESULT IN PERSONAL INJURY.

NEVER PROBE THE CONNECTORS ON THE AIR BAG MODULE. DOING SO MAY RESULT IN AIR BAG DEPLOYMENT. FAILURE TO FOLLOW THIS INSTRUCTION MAY RESULT IN PERSONAL INJURY.

AIR BAG MODULES WITH DISCOLORED OR DAMAGED TRIM COVERS MUST BE REPLACED.

VEHICLE SENSOR ORIENTATION IS CRITICAL FOR CORRECT SYSTEM OPERATION. IF A VEHICLE EQUIPPED WITH AN AIR BAG SUPPLEMENTAL RESTRAINT SYSTEM (SRS) IS INVOLVED IN A COLLISION, INSPECT THE SENSOR MOUNTING BRACKET AND WIRING PIGTAIL FOR DEFORMATION. IF DAMAGED, INSTALL A NEW SENSOR WHETHER OR NOT THE AIR BAG IS DEPLOYED. IF THE BODY WORK IS DAMAGED THIS WILL HAVE TO BE ADDRESSED.

TO AVOID ACCIDENTAL DEPLOYMENT AND POSSIBLE PERSONAL INJURY, THE BACKUP POWER SUPPLY MUST BE DEPLETED BEFORE REPAIRING OR REPLACING ANY AIR BAG SUPPLEMENTAL RESTRAINT SYSTEM (SRS) COMPONENTS. TO DEPLETE THE BACKUP POWER SUPPLY ENERGY, DISCONNECT THE BATTERY GROUND CABLE AND WAIT ONE MINUTE. FAILURE TO FOLLOW THIS INSTRUCTION MAY RESULT IN PERSONAL INJURY.

• NOTE: Repair is made by replacement only. If a part is replaced and the new part does not correct the condition, install the original part and carry out the diagnostic procedure again.

• NOTE: When installing a new air bag module, a prepaid return postcard is provided with the replacement air bag module. The serial number for the new part and the vehicle identification number (VIN) must be recorded and sent to Jaguar Cars Ltd.

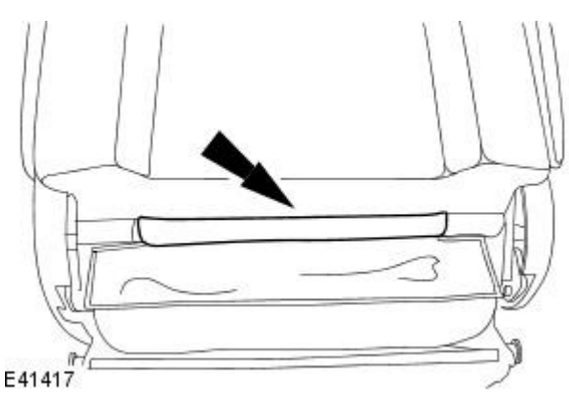

1. Adjust the front seat to the tilted position.
2. Release the front seat backrest cover rear lower retaining clip.

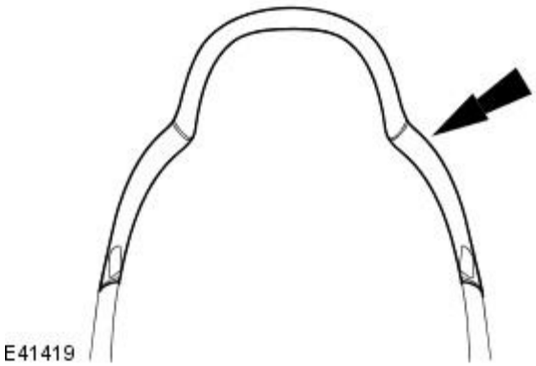

3. Release the front seat backrest cover rear upper retaining clips.

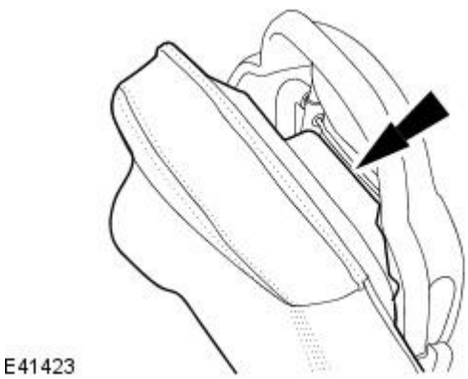

4. Using a suitable knife, detach the front seat backrest cover from the front seat frame.

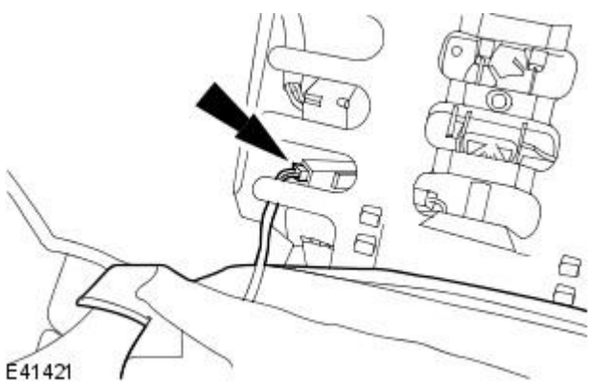

5. Remove the front seat backrest.

- Disconnect the front seat backrest heater mat electrical connector.

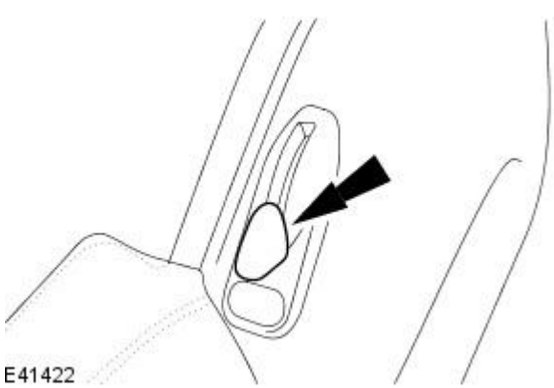

6. Remove the front seat tilt knob.

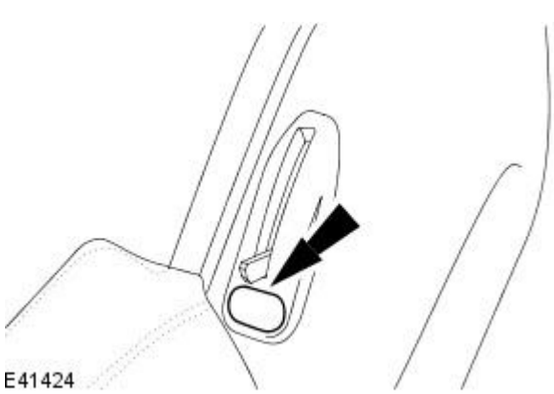

7. Remove the front seat tilt knob trim panel retaining screw trim cover.

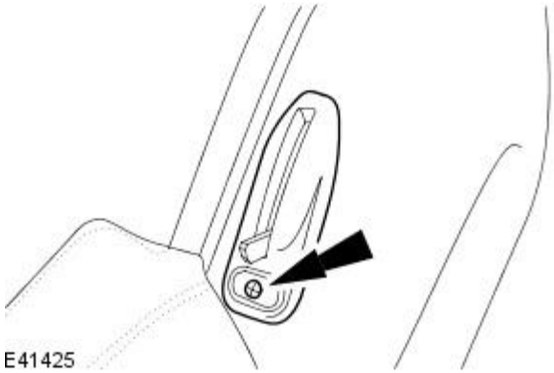

8. Remove the adjustment lever trim panel retaining screw.

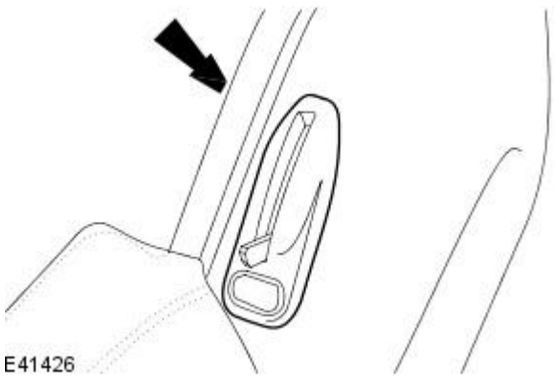

9. Remove the front seat tilt knob trim panel.

- Release the front seat tilt knob trim panel retaining tang from inside the front seat backrest frame.

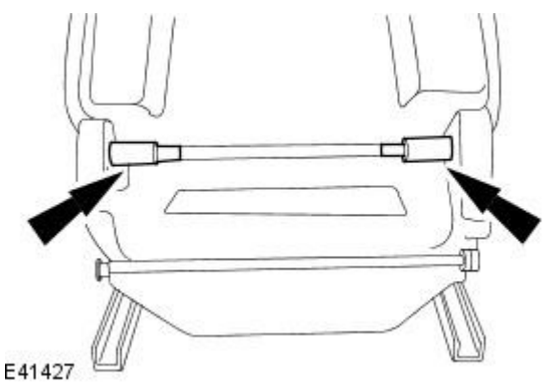

10. Detach the front seat backrest trim panel lower retaining clips.

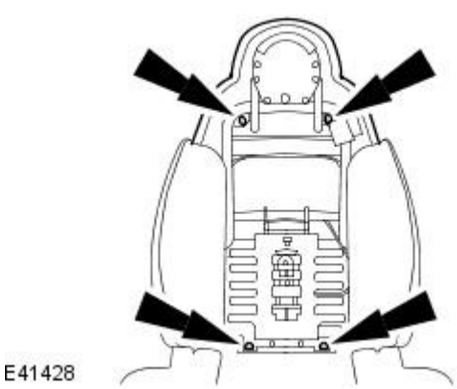

11. Remove the front seat backrest trim panel.

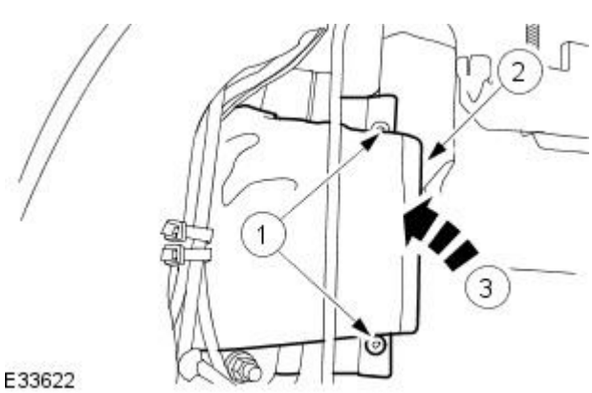

12. Reposition the side air bag module chute.

1. Remove and discard the rivets.
2. Release the side air bag module chute retaining clip.
3. Reposition the side air bag module chute.

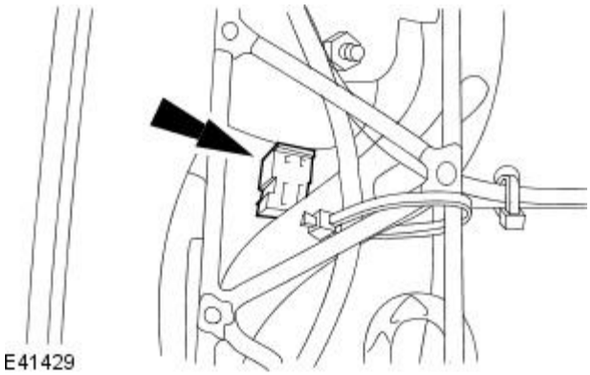

13. Disconnect the side air bag module electrical connector.

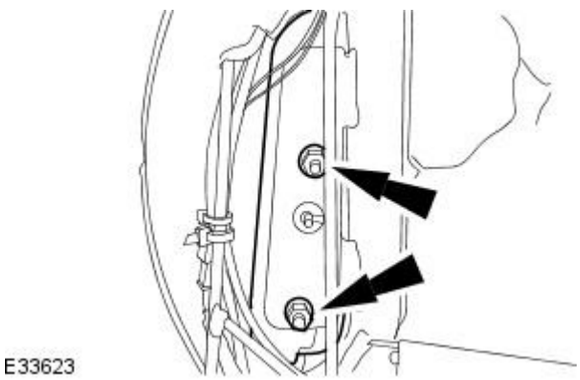

14. Remove the side air bag module.

- Remove and discard the retaining nuts.

Installation

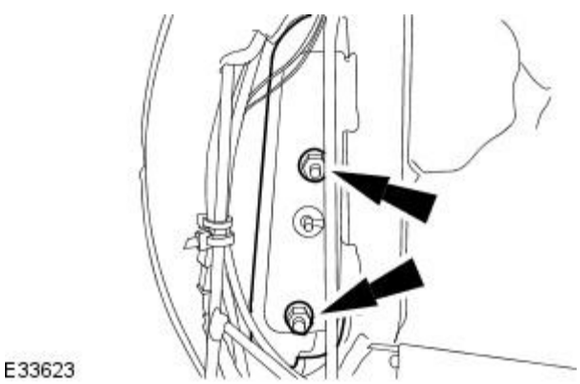

1. To install, reverse the removal procedure.

- NOTE: Install new side air bag module chute retaining rivets.
- NOTE: Install new retaining nuts.

- Tighten to 7 Nm.

Supplemental Restraint System - Side Impact Sensor

Removal and Installation

Removal

• WARNINGS:

BEFORE ANY AIR BAG/SRS SERVICE IS PERFORMED, AT LEAST ONE MINUTE MUST ELAPSE AFTER DISCONNECTION OF THE BATTERY POSITIVE CABLE TO ALLOW DISSIPATION OF BACK-UP POWER SUPPLY ENERGY.

Never probe the electrical connectors of the air bag modules or any other SRS component. Failure to follow this instruction may result in personal injury.

1. Remove the front safety belt. For additional information, refer to Section 501-20A Safety Belt System / 501-20B Supplemental Restraint System.
2. Disconnect the side impact sensor electrical connector.

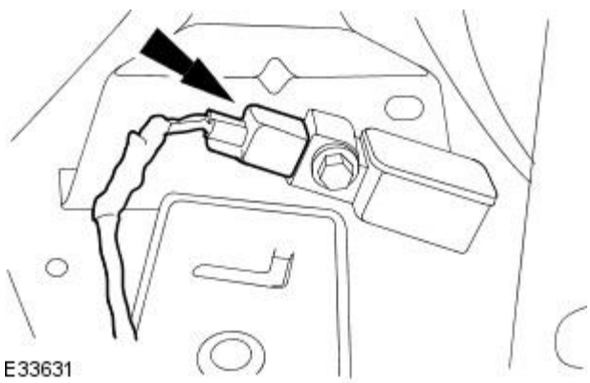

3. Remove the side impact sensor.

Installation

1. To install, reverse the removal procedure.
   - Tighten to 12 Nm.

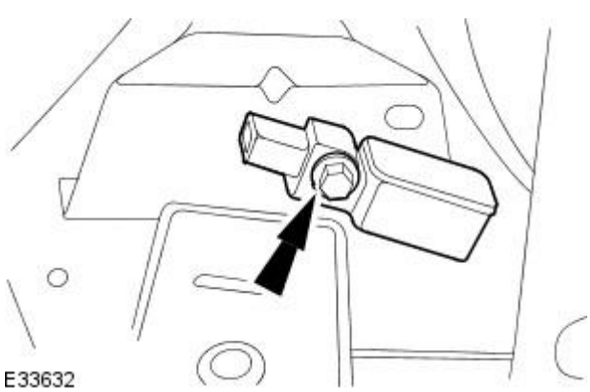

Published: 11-May-2011

Body Repairs - General Information - Body Repairs

Description and Operation

Body Pre-treatment, Painting and Sealing

PVC Coated Underside

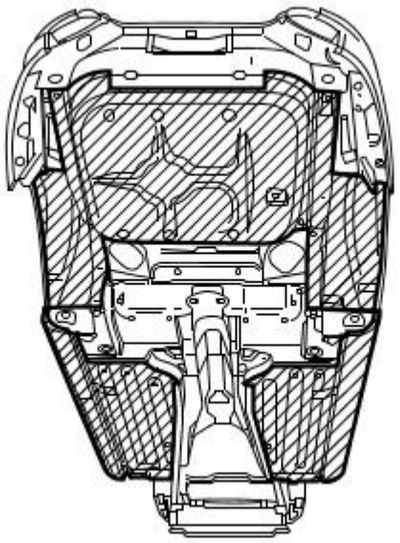

E36147

The body is pre-treated to ensure high resistance to corrosion and stone chip damage. Prior to the first major pre-treatment process, the body shell is high-pressure washed to remove any metal dust and residual oil.

The first major pre-treatment process consists of phosphate and electro-paint deposition, which together with zinc coating, forms the basis of the corrosion protection. This process includes high pressure knock-off, alkali de-greasing, zinc phosphate conversion of body steel (dissolving iron and coating with zinc phosphate crystals), trivalent chrome rinsing and demineralized water rinsing, sealing all chemicals and impurities.

Both dip and spray techniques are employed and the bodies are submerged to the waistline during the first and third rinses of the main phosphate clean. Chemical strengths and solution temperatures are continuously monitored and accurately controlled throughout the process.

An 80% water primer is then cathodic electro-deposition applied to the thoroughly cleansed bodies in a uniform 'sag-free' film 18 to 32 micron thick. Optimum durability of the electroprimer is achieved by finally curing in a stoving oven at 165 °C for a period of 20 minutes.

All underbody seams of the fully primed bodies are then manually sealed, to prevent water and dust ingress into the vehicle and to enhance corrosion protection.

A semi-automatic airless spray application of a PVC coating 800 to 1000 g/m2, is applied to the underside of the main floor panels, trunk floor and rear wheel arches (ref. illustration above).

The upper panels of primed and externally sealed bodyshells are next lightly scuffed to remove imperfections and a PVC coating is applied to all internal seams by an airless spray technique. A PVC bead seal is also applied to the doors, hood and trunk clinch joints.

Following anti-corrosion, sealing and priming treatment, the bodies enter the first stage of 'cosmetic' painting. This consists of the application of two coats of a highly chip resistant polyester surfacer, employing high voltage electrostatic 'spinning bells', to achieve a final film thickness of 35 to 50 micron. Between surfacer coats, a polyurethane coat is automatically applied to the sills to impart even greater resistance to stone chipping.

Wax Injected Box Sections

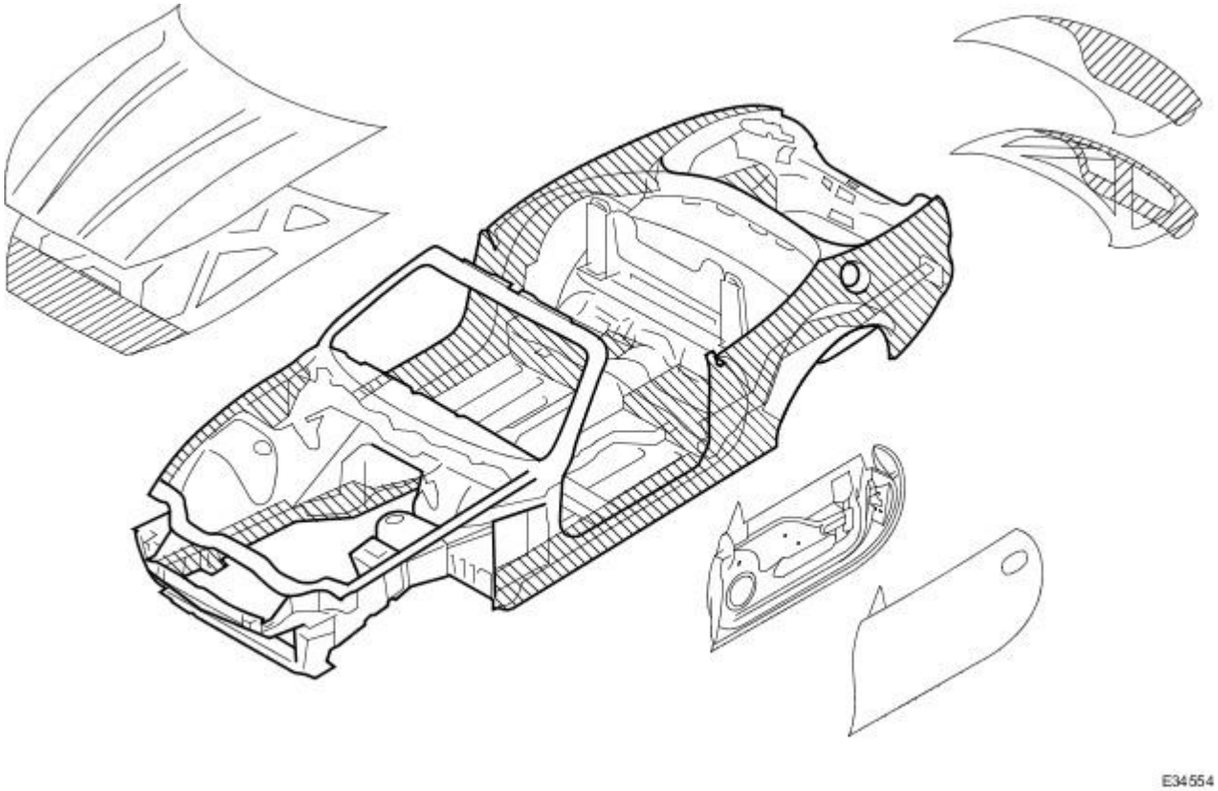

All interior panels are then painted using a color keyed sealer, wet-on-wet with a surfacer material, after which the bodyshells are stoved at 160 °C for a period of 20 minutes. Further protection against corrosion is provided by a medium solids black pigmented wax which is airless spray applied to vehicle undersides.

Critical body box-sections are similarly protected by spray injecting a high solids wax. This is then re-flowed at 70 to 90 °C to achieve optimum seam/joint penetration and form a resilient and durable internal coating (ref. illustration above).

After full wet sanding, rinsing and drying to provide a good substrate, a color-keyed semi-matt sealer coat is applied using electrostatic bells to achieve a film build of 25 to 35 micron. The bodies are then stoved for a further 20 minutes at a temperature of 145 °C and subjected to a local 'seek-and-find' de-nib operation prior to the final two coat process. The final top coat finish is achieved by using polyester base coat colors and an acrylic sag resistant clear coat. This clear over base (COB) process produces a high gloss, durable paint finish with a film thickness of 50 to 65 micron, which is finally cured at a temperature of 135 °C for 20 minutes.

The Munsell three dimensional system of color management is employed to achieve highly accurate control of vehicle colors. This system ensures that paint pigmentations are accurately maintained and facilitates vigorous final checking of finished vehicles for color match. The hue of individual panels such as trunk lids, doors and hoods is in some instances adjusted to offset the effects of differing light angles. Where applicable, coachlines are manually applied and radiant heat cured on the completed and valeted vehicle prior to hand spray application of a protective wax coat.

Introduction

All repairs, whether structural or cosmetic must return the vehicle to the original manufactured condition with regard to occupant safety, dimensional accuracy, finish and corrosion protection, and ensure continuation of the Paint Surface and Corrosion warranty where applicable.

Similarly, repaired vehicles must be fully checked, and where appropriate reset, with regard to steering, suspension, braking, and occupant restraint systems.

Health and Safety

It is the duty of both employer and employee to ensure safe working conditions and practices. Correct safety procedures and equipment must be applied to any potential hazards that are notified, or identified by an operator.

Employees must observe local legislation governing working conditions and practices at all times and must always act in a responsible manner in the workplace. In the event of personal injury resulting from any workshop activity, medical help should be obtained as soon as possible. Self-treatment other than by first aid, should not be attempted.

WARNING: READ AND UNDERSTAND WORKING PRACTICES CONCERNING CLIMATE CONTROL SYSTEMS, SECTION 412, WITH SPECIAL REGARD TO: REFRIGERANT MUST NEVER BE DIRECTLY VENTED TO ATMOSPHERE. ALWAYS USE JAGUAR APPROVED RECOVERY / RECYCLE / RECHARGE EQUIPMENT, WEAR SUITABLE EYE AND SKIN PROTECTION AND OBSERVE ALL APPLICABLE SAFETY REQUIREMENTS.

With the constant introduction of new materials in the manufacture of vehicles, an awareness of the potential risks and appropriate precautions is important.

Notification of Hazards

Symbols, which convey important information, will be positioned at the beginning of any specific operation or text. Standard symbols will be used where repairs or service procedures are detailed. All symbols will conform to standard ANSI Z535.3 (American National Standards Institute). The surround shape of the symbol will indicate the basis of the message to be conveyed (see top three elements of ?) The icon depicting the message will be within the surrounding shape. Once nominated the icon will retain its meaning.

POTENTIAL RISKS

Paint

Organic solvents, found in paints, may cause damage or severe irritation to liver, kidneys, digestive tracts and respiratory system if inhaled over long periods of time. Prolonged exposure to isocyanates can cause lung sensitization with asthma-like symptoms developing on

subsequent exposure to even low concentrations of isocyanates. Solvent inhalation can cause dizziness or loss of consciousness and inhalation of spray dust and sanding debris may cause lung damage.

Spillage or splashes of solvents, paint activators and additives can cause dermatitis or eye injury. Contact with peroxide or acid catalysts can cause serious burns.

Applied Heat (Welding)

There is considerable risk of damage to eyes and skin if welding or flame cutting is attempted without using the correct protective equipment. Many materials or fluids within vehicles are highly flammable and toxic and dangerous fumes may also be liberated if heat is applied to expanded foam, corrosion protection, trim and seat materials, paints containing isocyanates, and adhesive and sealing compounds.

When heated to a temperature of 300°C, polyurethane based compounds may liberate small quantities of isocyanate. Many types of nitrogen containing chemicals may be liberated as breakdown products which can contain isocyanates, oxides of nitrogen and hydrogen cyanide.

Potentially toxic or asphyxiant fumes and gases produced when welding include zinc oxide from zinc coated panels, and ozone gas from the MIG process.

Metal Repair

There is considerable risk of damage to eyes, ears and skin when cutting, forming, or dressing metal. Soldering operations can also be hazardous due to heat generated fumes and the risk of skin contact with hot materials.

PRECAUTIONS

Paint

The inhalation of sprays, fumes, or dust during paint application or sanding processes should always be avoided. Ensure that there is efficient ventilation / extraction at all times. Paint spraying should be confined as far as possible to spray booths. Personnel with a history of asthma should not be employed in any process involving the use of isocyanates. Operators working in a spray booth where isocyanate material is present must use air-fed breathing equipment with air supplied to the visor at the recommended pressure and filtered to remove oil, water, and fumes. Operators involved in handling mixing or spraying should wear protective clothing including gloves and goggles, to avoid skin and eye contact. Particle masks or canister type respiratosr should be worn when sanding.

Applied Heat

When welding, flame cutting, brazing etc, the operator should use as appropriate, goggles, mask / fume extractor and flameproof protective clothing. It is especially important when working with polyurethane compounds to use air-fed breathing equipment. Appropriate fire fighting equipment and personnel trained in its use must always be available.

Metal Repair

Appropriate eye and hand protection should be worn when sanding, drilling, cutting, chiselling, flatting or welding. Face masks or air-fed visors should also be worn when sanding or flatting either body solder or fillers. On completion of a soldering operation, swarf must be removed from the work area and the operator must wash his hands thoroughly.

GENERAL REPAIR NOTES

The following advice should be noted before any repair work is carried out.

Disconnect the vehicle battery ground lead (disconnect the alternator where electric welding is used) and take note of the reconnection procedures as detailed in 86.15.15.

Where structural parts are straightened or renewed, a body alignment / straightening jig must be used. The application of heat, especially excessive heat, reduces the strength of steels, where appropriate therefore, structural sections should be straightened by cold processes.

Repairs may only be carried out successfully, and any warranties protected, if genuine Jaguar replacement parts and Jaguar approved materials are used.

The correct tools, procedures and facilities must always be used. The quality of the work must not be compromised by using inappropriate methods or equipment.

All trim and electrical components in the locality of the repair must be removed or disconnected prior to panel removal / replacement; this is especially important where hollow sections may contain harnesses, tubes or foam, see section A4.3.5.

WARNING: DO NOT WORK IN THE VICINITY OF A LIVE AIR BAG. ALWAYS DISCONNECT THE GROUND CABLE FROM THE BATTERY TERMINAL FIRST. NOTE WORKING PRACTICES FOR AIR BAGS IN SECTION 20. ANY SEAT BELT WHICH HAS BEEN WORN IN AN ACCIDENT MUST BE RENEWED.

CAUTION: Electric arc welding should not be used on Jaguar vehicles. The high voltages produced by this process will cause irreparable damage to the electrical control and microprocessor systems.

The following welding and gas processes are the only ones recommended by Jaguar Cars Ltd.

Welding and Gas Processes

Resistance spot welding, MIG welding and all gas processes may only be carried out on bare, unpainted or unplated metal.

The flanges of panels to be welded together, must be clean, corrosion free and treated as appropriate, with either weld-through primer or inter-weld sealer. Only materials and processes specified in the 'Body Sealing and Preservation Manual' should be used in the relevant application areas detailed in this section. Refer to 'Zinc Coated Panels' Section

Generally, resistance spot welding equipment used in the motor vehicle repair industry does not produce welds of equivalent strength to those achieved during manufacture. The expression 'single row of resistance spot welds' indicates that the spots should be spaced on a pitch of 19mm to 25mm, which normally results in more spot welds than those produced in the original factory joint.

Resistance spot welds should be removed using a resistance spot weld cutter. If the new joint is to be MIG plug welded, old resistance spot

welds should be cut from the panel to be retained and the resulting holes used for plug welding. Suitable holes may also be drilled or punched; 8,0 mm dia for sections up to 1,6 mm, and 10,0 mm dia for thicker sections.

PLASTICS-EXPLANATORY NOTES

Plastic component and trim materials.

This table, in conjunction with the illustrations on the following pages will enable rapid identification of the particular material of any major plastic part.

• NOTE: Only those components suitable for economic reclamation are identified.

Term	Material Name
abs	Acrylonitrile Butadiene Styrene
abs / pa	Acrylonitrile Butadiene Styrene and Polyamide (nylon) blend
abs / pc	Acrylonitrile Butadiene Styrene and Polycarbonate blend
ABS / PBT	Acrylonitrile Styrene Acrylate and Polybutylene Terephthalate
pa	Polyamide (nylon)
pc	Polycarbonate
pe	Polyethylene
pmma	Polymethyl Methacrylate
pom	Polyoxymethylene (acetal)
pp	Polypropylene
ppo	Modified Polyphenylene Oxide
pur	Polyurethane
pvc	Polyvinylchloride
SMA	Styrene Maleic Anhydride

Plastics - Handling Notes

The exterior panel temperature of a vehicle must not exceed 95°C at any time and may only be held at this level for a maximum of two hours. Similarly, interior vehicle temperature must be limited to 86°C for a maximum duration of two hours. Exposure to temperatures above those specified may result in distorted or permanently damaged components. If there is doubt concerning temperature limitations, components that may be adversely affected by exposure to heat should be removed from the vehicle.

Plastic components that become greasy may be cleaned with an 'SBP 3' spirit wipe, or equivalent.

Recycled Materials

Any of the materials listed in this section, may be recycled provided that they are not contaminated by other incompatible plastics or metals. For instance, the air conditioning unit case, manufactured from PP (polypropylene), must be separated from the heater matrix, evaporator, control devices (electronic and mechanical) and all fixings before it can be considered for recycling. After removal, the case must only be placed for disposal with materials of the same generic type. Bumper cover assemblies similarly have side armatures of dissimilar materials rivetted to them, these together with their fixings must be removed prior to recycling. Components manufactured from 'blended' materials must not be recycled with pure materials. For example do not mix PC/ABS (wheel trim) with ABS ('B' pillar upper trim).

Body Structure

Introduction

The Jaguar XK8 has a unit construction monocoque body structure with bolt-on front fenders and welded rear fenders. The door and rear quarter glass are of frameless drop-glass design.

Constructional Steel Classification

Material	Application
High strength low alloy (HLSA).	Impact prone areas, ie. seat frame and bumper mountings.
Double sided zinc plated mild steel.	Exterior body panels subject to severe conditions such as stone chipping and weather exposure (excluding roof panel).
Boron steel.	Door intrusion beams
Mild steel.	Internal brackets, fillets and strengtheners.
Bake-hardened steel.	For increased panel stiffness. e.g. front longitudinals.

BODY ALIGNMENT

The Body Dimensions Plan and Side, Front and Rear views, provide specified body dimensions to facilitate damage assessment and location of replacement parts. These dimensions must be strictly applied when used for damage assessment, component location or post repair verification.

• NOTE: The right-hand side is always looking towards the front, from the rear of the vehicle.

The nominated plan view master datums are on the right-hand side of the body with the left-hand datums dimensioned from them. Right-hand datums must therefore be known to be correct before any other cross-car dimensions are checked.

Datum location, Example

The Front Master Datum (hole in front RH longitudinal to right of crossbeam front mounting) is nominally 440,07mm to the right-hand side of the body center line. The LH side front datum is measured 879,14/ 881,14mm from the RH. Refer to the Body Dimensions Plan.

Expressed as a true position in three planes, the centre line of the front master body location is:

Location	Position
Centre line of the master body location hole (31mm dia).	• X 636,58 • Y 440,07 • Z 1,6

Body Dimensions-Plan and Side Views

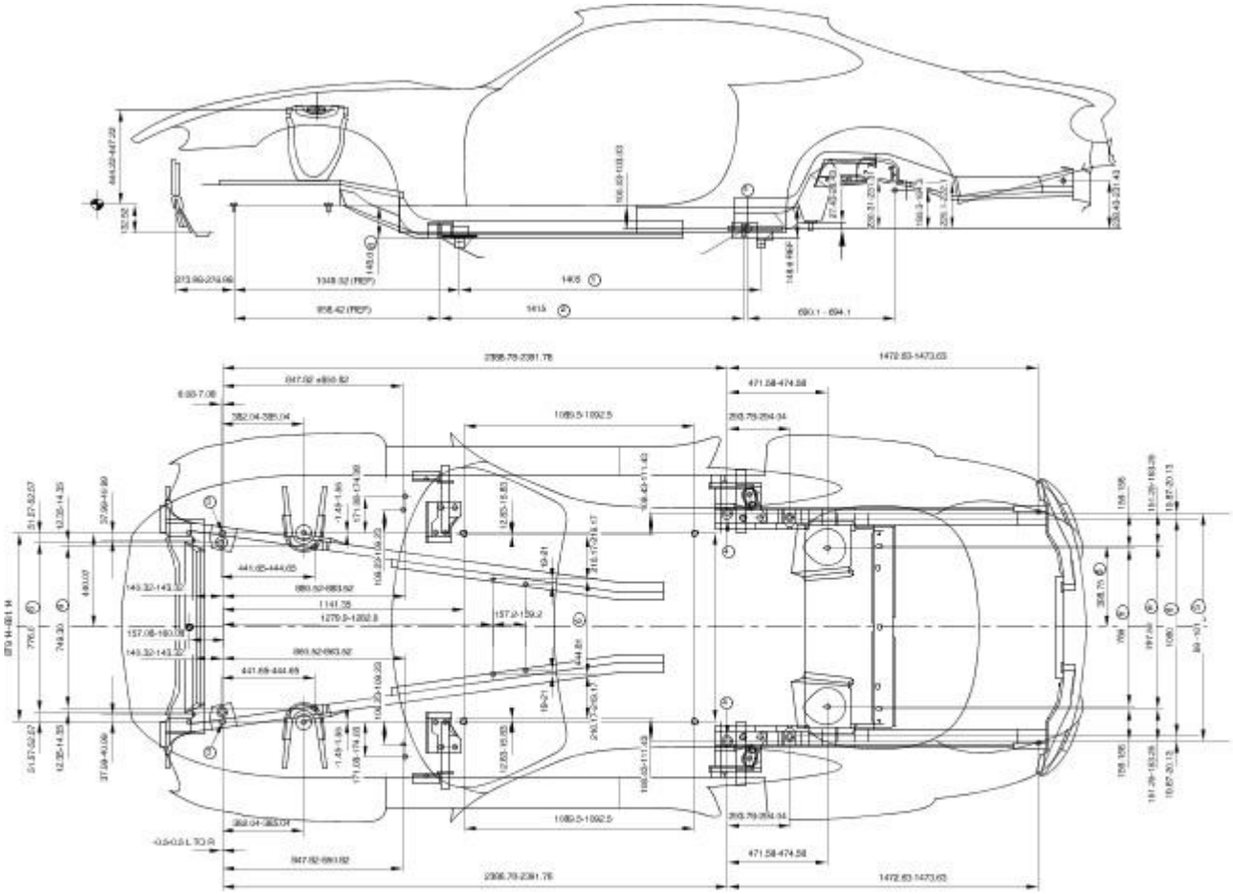

E35705

Key to Plan and Side Views

Key	Location
1	Transit skid
2	Jacking plate centres
3	Master body location hole
4	Master jig location rear
5	To LH location
6	For reference

Body Dimensions- Front and Rear Views

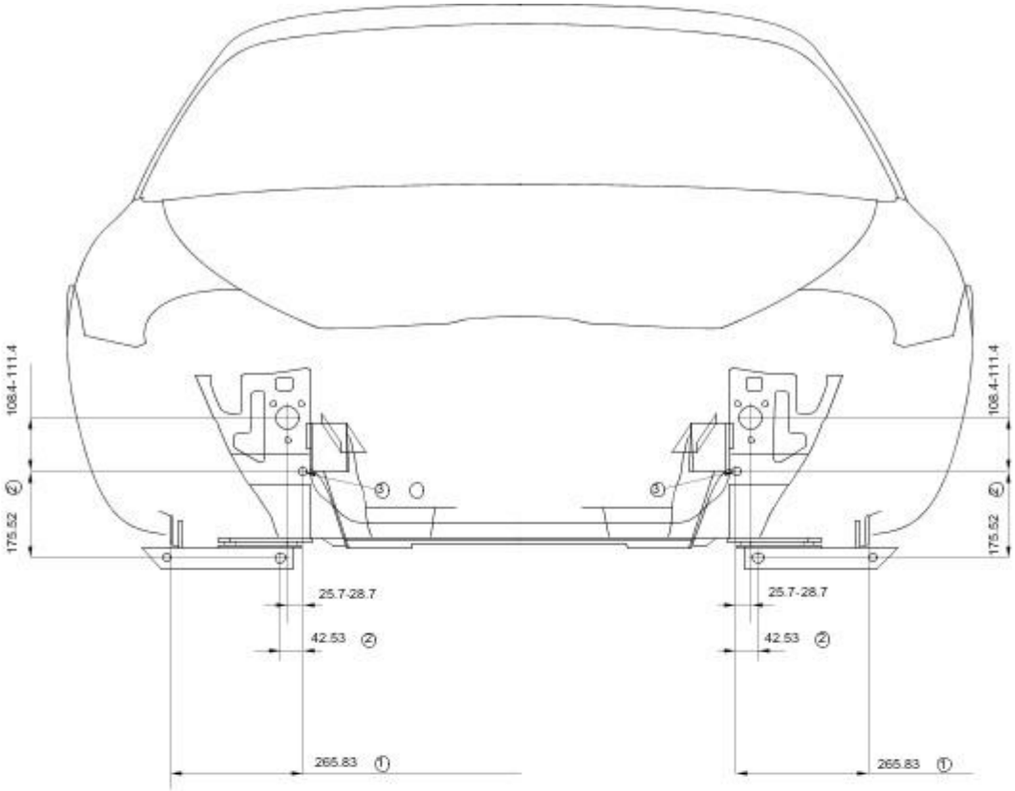

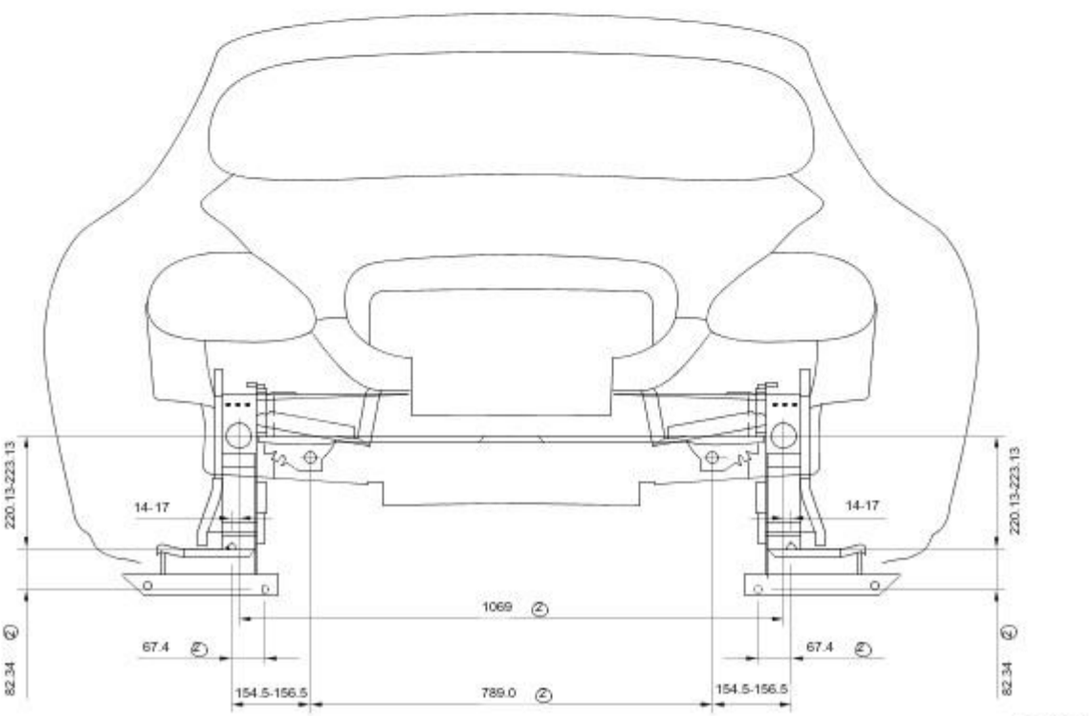

Key to Front and Rear Views

Key	Location
1	Jacking plates
2	Reference

ZINC COATED PANELS

Description

Approximately 70% of the 'body in white' (body) mass is made up of zinc coated panels.

• NOTE: To maintain the protective qualities of the zinc treatment, repairs to any damaged coated area must be made as soon as possible after the damage has occurred.

All exterior skin panels, with the exception of the roof, are double side zinc plated and this coating (nominally 7,5 microns) provides two way corrosion protection. Should the outer layer of paint become chipped with the zinc coating remain intact, the zinc will oxidize on contact with air and being impermeable, this coat of oxidation will prevent corrosion damage of the base metal. If the outer layer of paint and the zinc coating become damaged, the zinc rather than the base metal will react with the air and 'sacrifice' itself to corrosion as a 'sacrificial anode'.

Welding Preparation

Contamination of the weld with resultant reduction in joint strength increase and increased electrode tip dressing frequency will occur zinc coating is not removed. In exceptional cases where the zinc coating must remain intact, the tip pressure and welding current should be increased by 10 to 20%.

Where 'resistance spot welding' is employed, the zinc coating should be lightly abraded away on the mating surfaces and those in contact with the electrode tips. Do not remove more zinc coating than is absolutely necessary.

Before welding, a weld-through primer or inter-weld sealer should be applied, as detailed in the Body Sealing and Preservation manual.

Where MIG welding is used as an alternative to resistance spot welding for plug and butt welds or due to limited access, the problems caused by the presence of zinc coating are much the same, with the added complication of increased weld spatter and nozzle contamination.

Body Fillers

Conventional polyester fillers do not adhere satisfactorily to zinc plated panels, it is therefore important that only those products specifically designed for this application are used and the manufacturer's recommendations are followed.

Refinishing

Only use products approved by Jaguar Cars Ltd and exercise special care on zinc coated panels.

Replacement panels are supplied ready primed and only those areas to be welded etc should have bare metal exposed as decribed in 'Welding Preparation. Where any part of a panel is dressed back to the bare surface, it should be treated with a zinc rich primer compatible with the paint application system.

GENERAL PREPARATION OF PANELS

Removal of Panels and Welds

• NOTE: Where other components must be removed for access, refer to the relevant manual section for guidance. This is particularly important where steering, braking, suspension, electrical and safety systems are affected.

Expose all resistance spot welds, using a rotary wire brush fitted to an air drill or a hand held wire brush on those that are not clearly visible (1).

WARNING: DO NOT BURN UNDERSEAL OFF. USE A 'HOT KNIFE' OR SUITABLE SOLVENT.

Cut out spot welds using a Zipcutter or Roto-Bor (2). At this point it may be necessary to cut out the bulk of the panel using a pneumatic saw (3).

• NOTE: On some panels, before removing the bulk with a pneumatic saw, it may be necessary to remove brazed areas and MIG welded seams. Separate spot welded joints and remove the panel remnants.

Removal of Panels and Welds

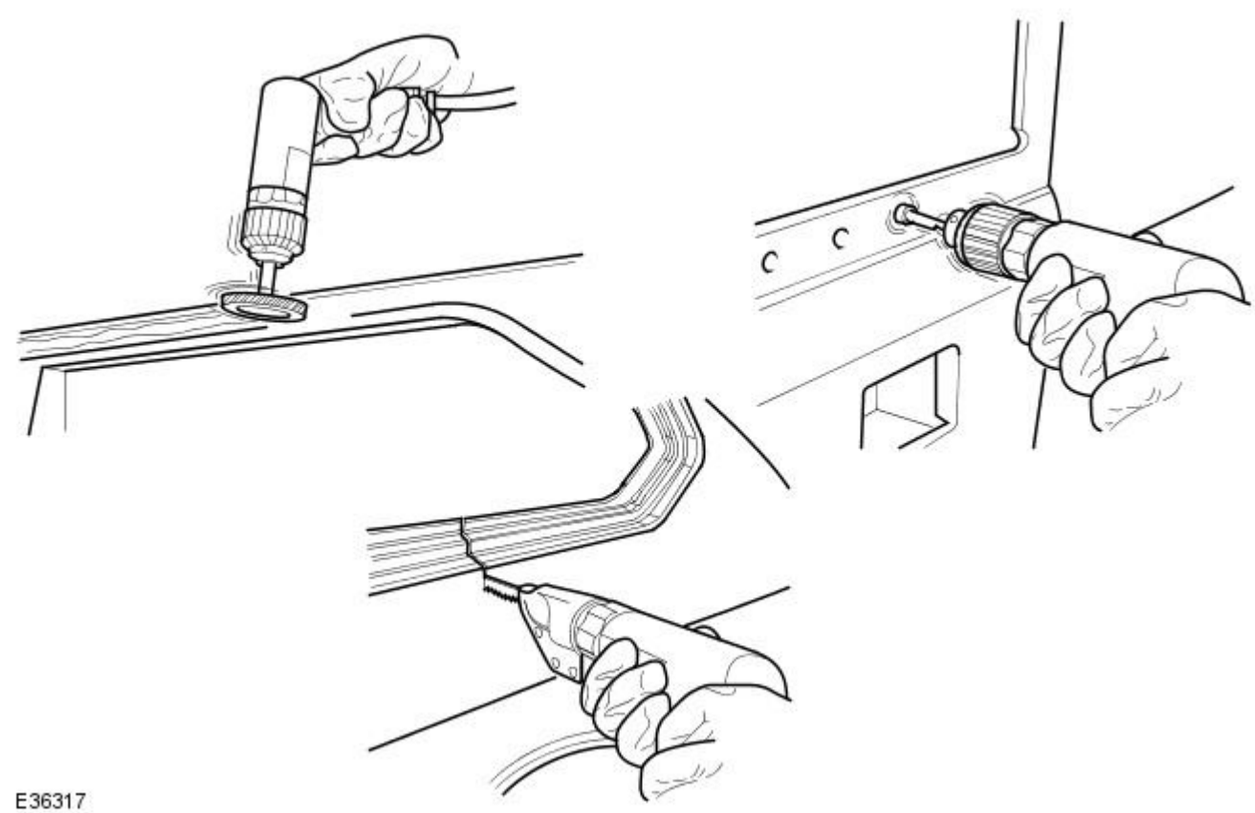

PREPARATION OF PANEL SURFACES

WARNING: DO NOT BURN UNDERSEAL OFF. USE A 'HOT KNIFE' OR SUITABLE SOLVENT.

• NOTE: Observe all appropriate safety procedures.

Remove weld nuggets with a sander and 36 grit disc and clean all flanges to a bright smooth finish (1). Straighten existing panel joint

edges as required.

Mark off the area of new panel and cut to size leaving approximately two inches overlap on the existing panel. Offer up new panel or section, align with associated parts, i.e. new rear fender aligned with door / luggage compartment lid / backlight aperture and clamp the panel into position.Where necessary, cut the new and original panels to form a butt joint.

Release all clamps and remove the new panel. If required, apply inner panel protection and or sound insulation.

Prepare the new panel joint edges, including interior and exterior, for welding by cleaning to bright metal (1).

Apply weld-through primer or interweld sealer(2) to all surfaces to be resistance spot welded.

Where appropriate, apply metal-to-metal adhesive or sealer (3) in accordance with the manufacturer's instructions.

Panel Surface Preparation

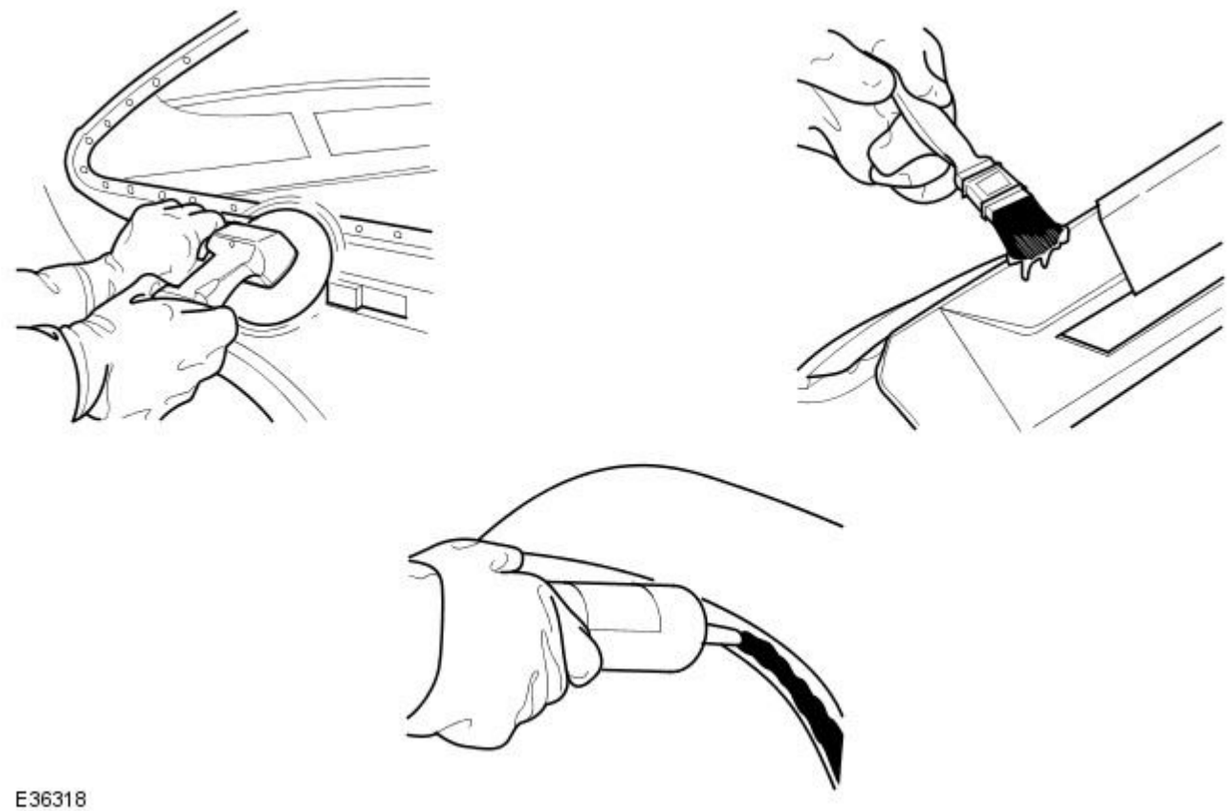

E36318

ALIGNING AND WELDING PANELS

• NOTE: Observe all appropriate safety procedures.

Apply appropriate sealer or joint preparation.

Align the replacement panel with adjacent panels, secure with clamps, MIG tack welds or self tapping screws. Finally check panel alignment and contours and re-adjust as necessary.

Select the correct 'arms' for resistance spot welding and ensure that tips are correctly trimmed.

• NOTE: It is recommended that 'arms' of not more than 300 mm (12 in.) long are used and the equipment is tested for satisfactory operation by producing test samples (2). In the absence of test equipment, a satisfactory weld can be verified by pulling the test samples apart and viewing the weld condition.

Prepare zinc coated panels as detailed in this section and resistance spot weld where required (3).

Dress back all tack welds, then MIG seam-weld the butt joints (4). Finally dress all welds as necessary and final braze and fill prior to paint preparation.

Aligning and Welding Panels

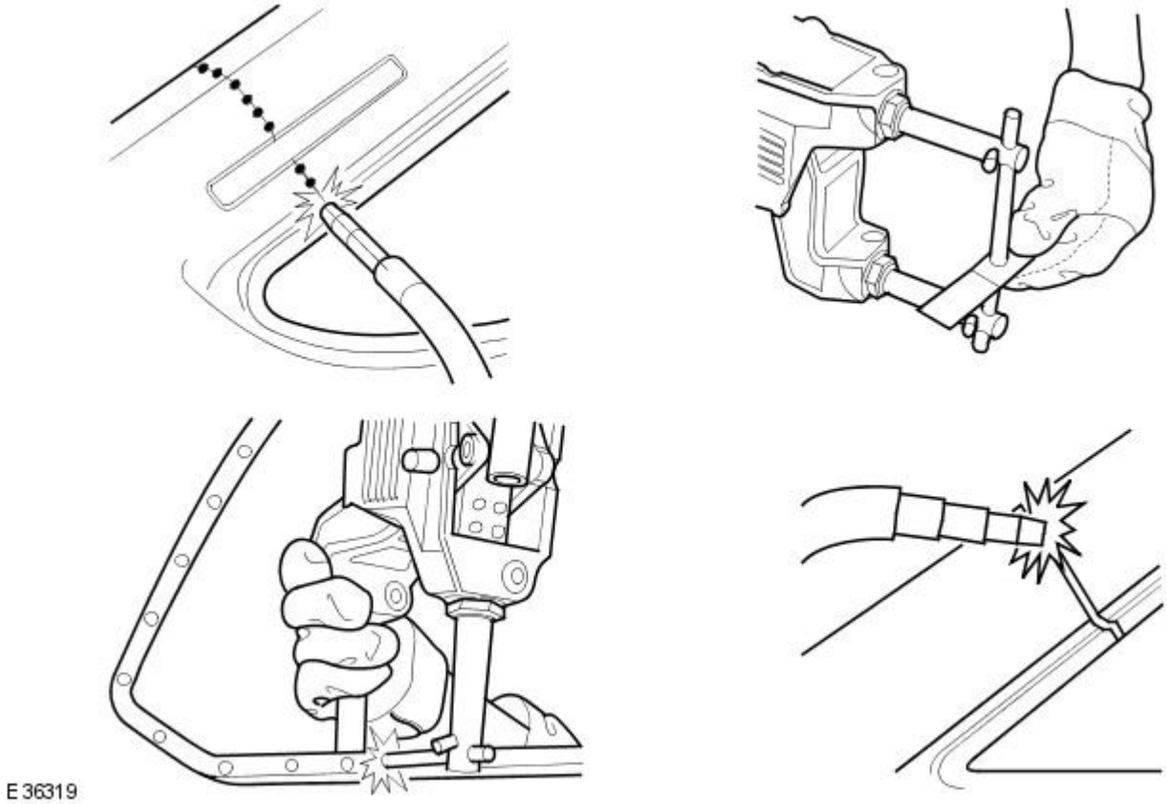

Cutting andWelding Symbols

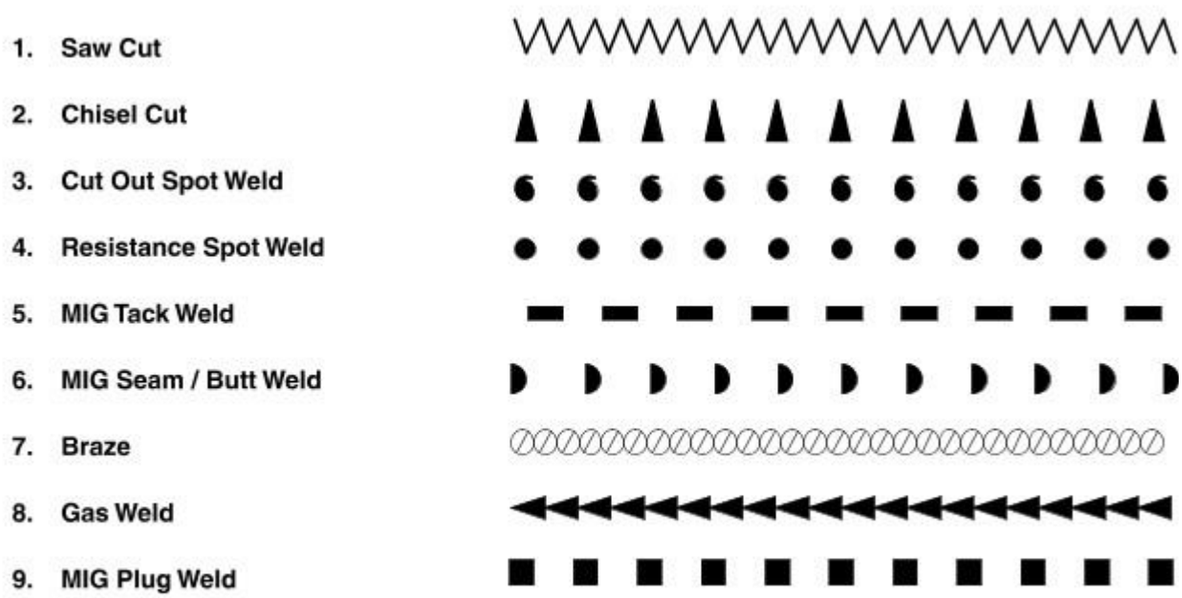

CAUTION: Reference should always be made to the welding tables and illustrations in the relevant procedures. Observe all safety precautions with respect to yourself, other people, your equipment and the workplace.

1.	Saw Cut
2.	Chisel Cut
3.	Cut out Spot Weld
4.	Resistance Spot Weld
5.	MIG Tack Weld
6.	MIG Seam/Butt Weld
7.	Braze
8.	Gas Weld
9.	MIG Plug Weld

CAVITY WAX INJECTION - APPROVED ADHESIVES, SEALERS AND BODY PROTECTION SYSTEMS

• NOTE: Cavity wax processes should only be applied on completion of all other refinishing and protection procedures.

Hood Front Cavity Wax Injection Points

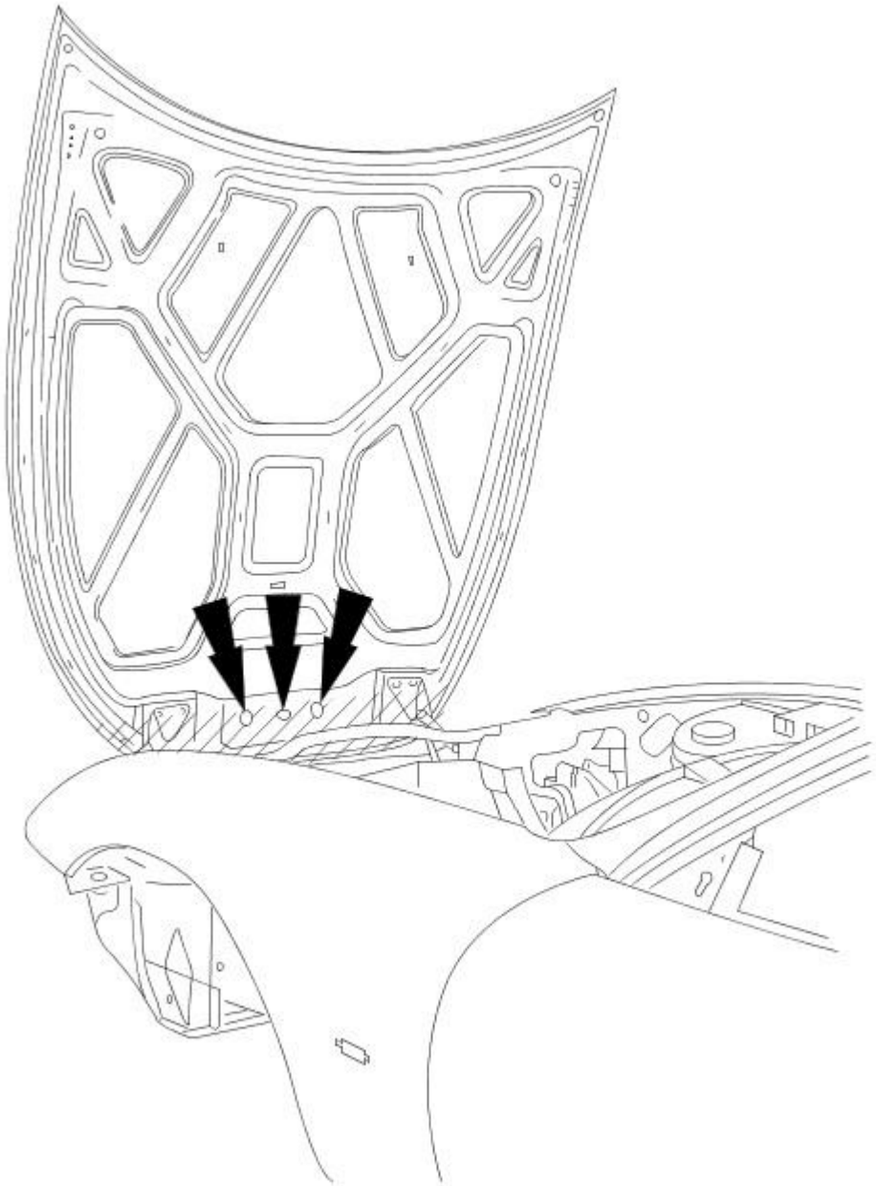

E36263

Front Longitudinal and Lower Fender Wax Injection Points

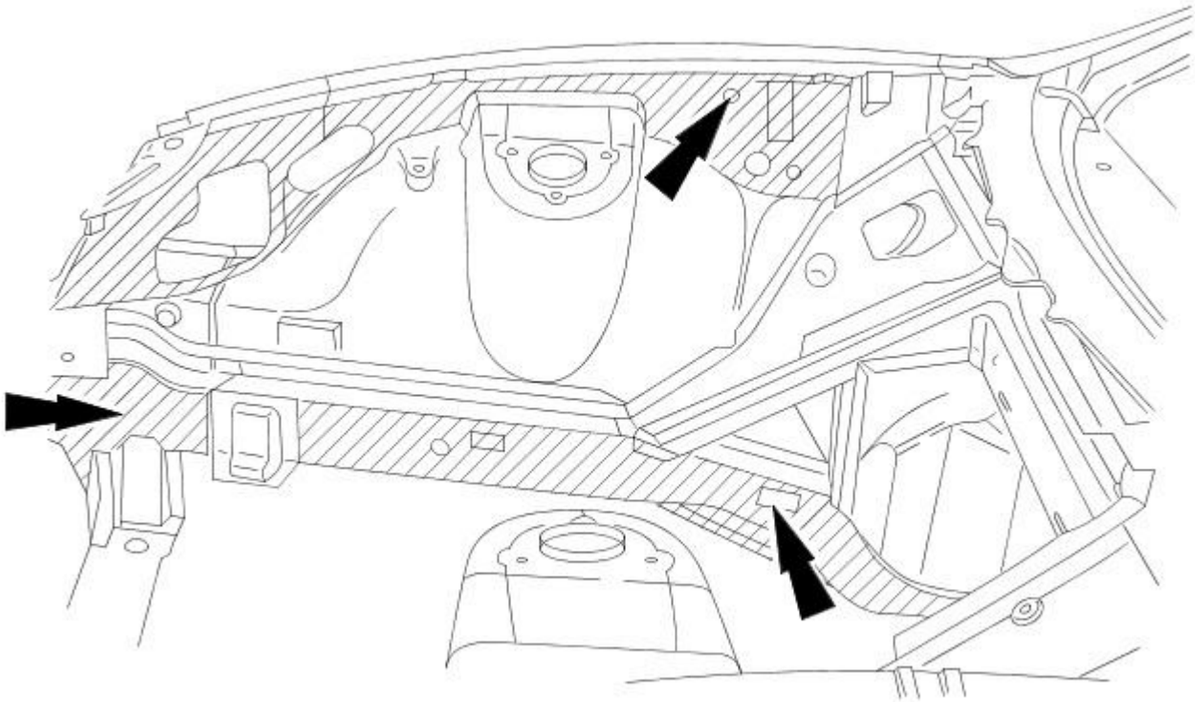

E36270

Door Wax Injection Points

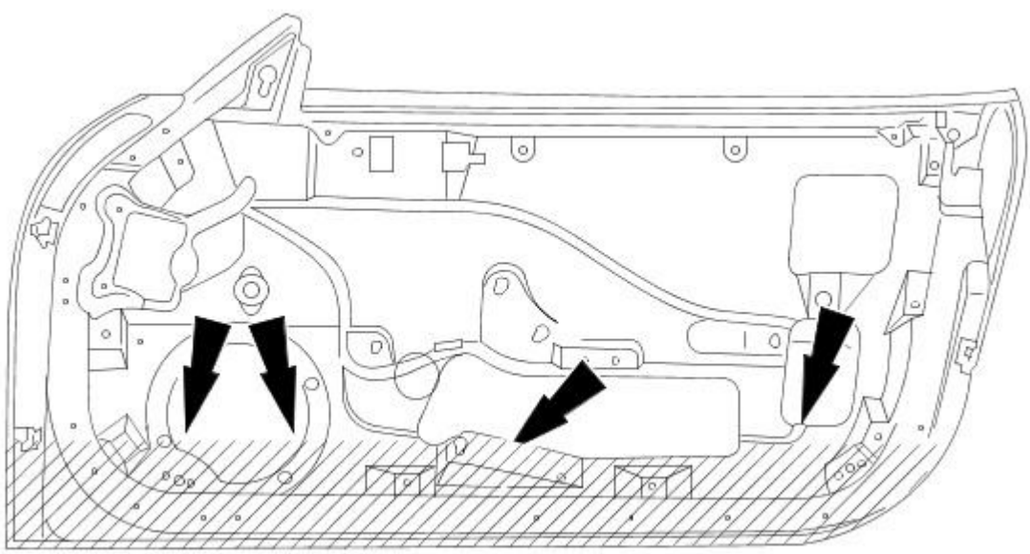

E36262

Forward Sill Wax Injection Point

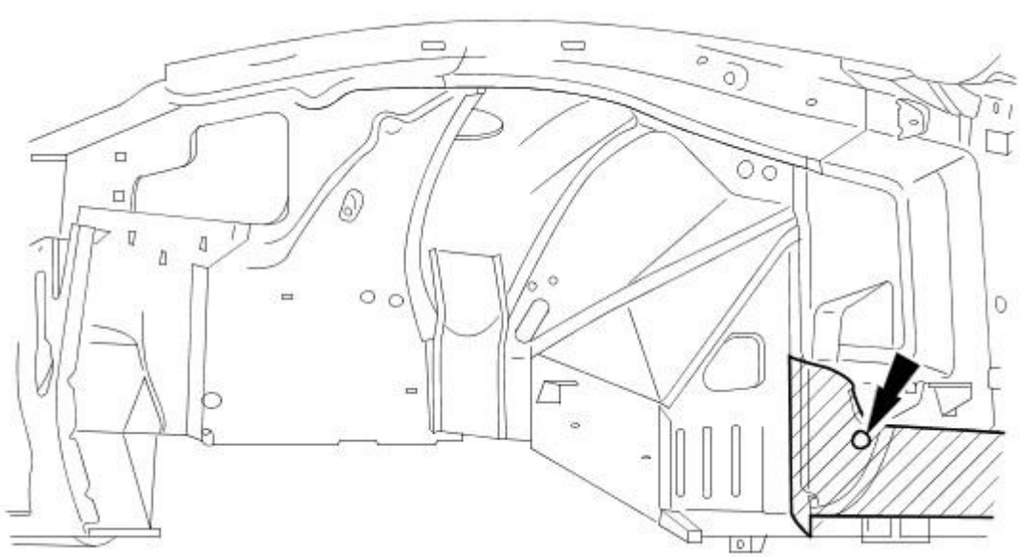

E36265

Floor Wax Injection Areas

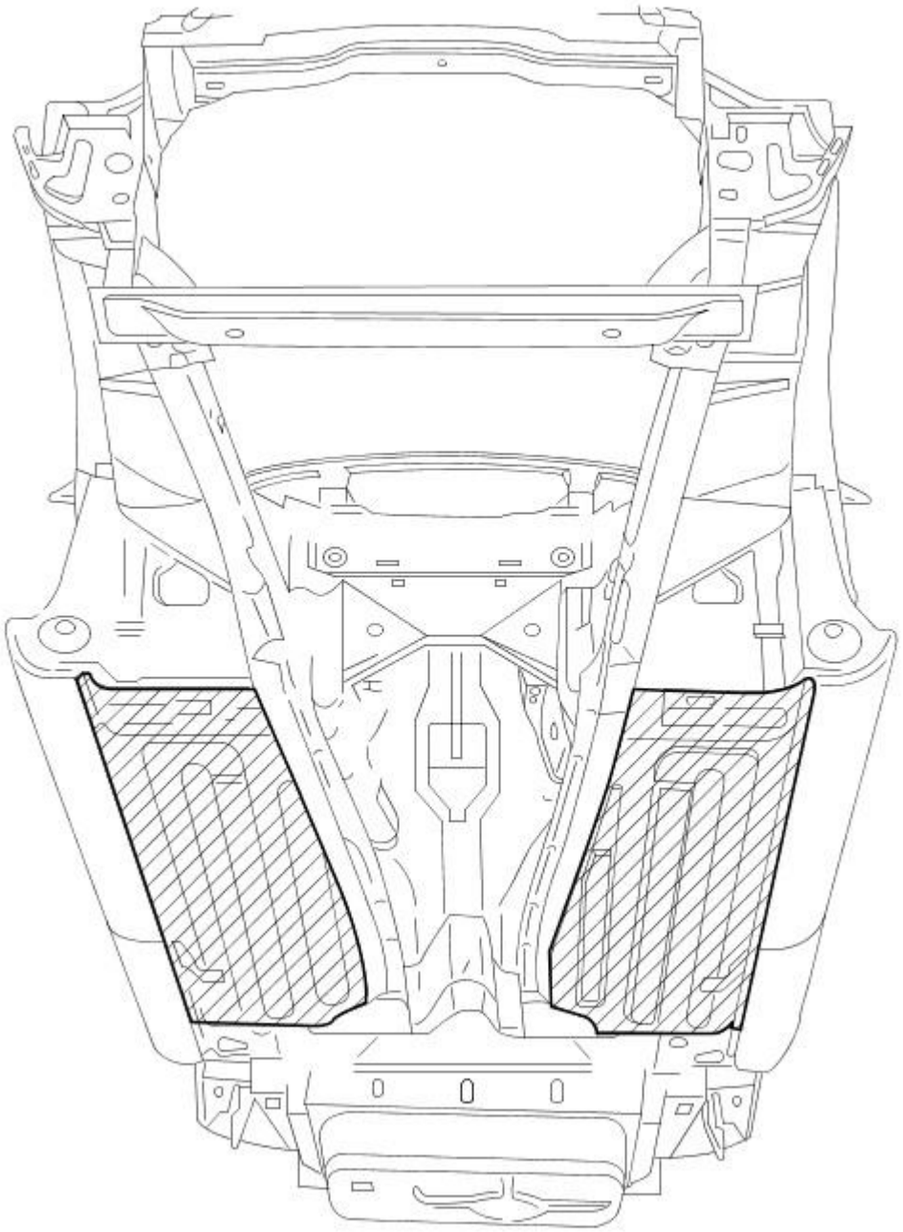

Rear Wheel Arch and Trunk Lid Wax Injection Points

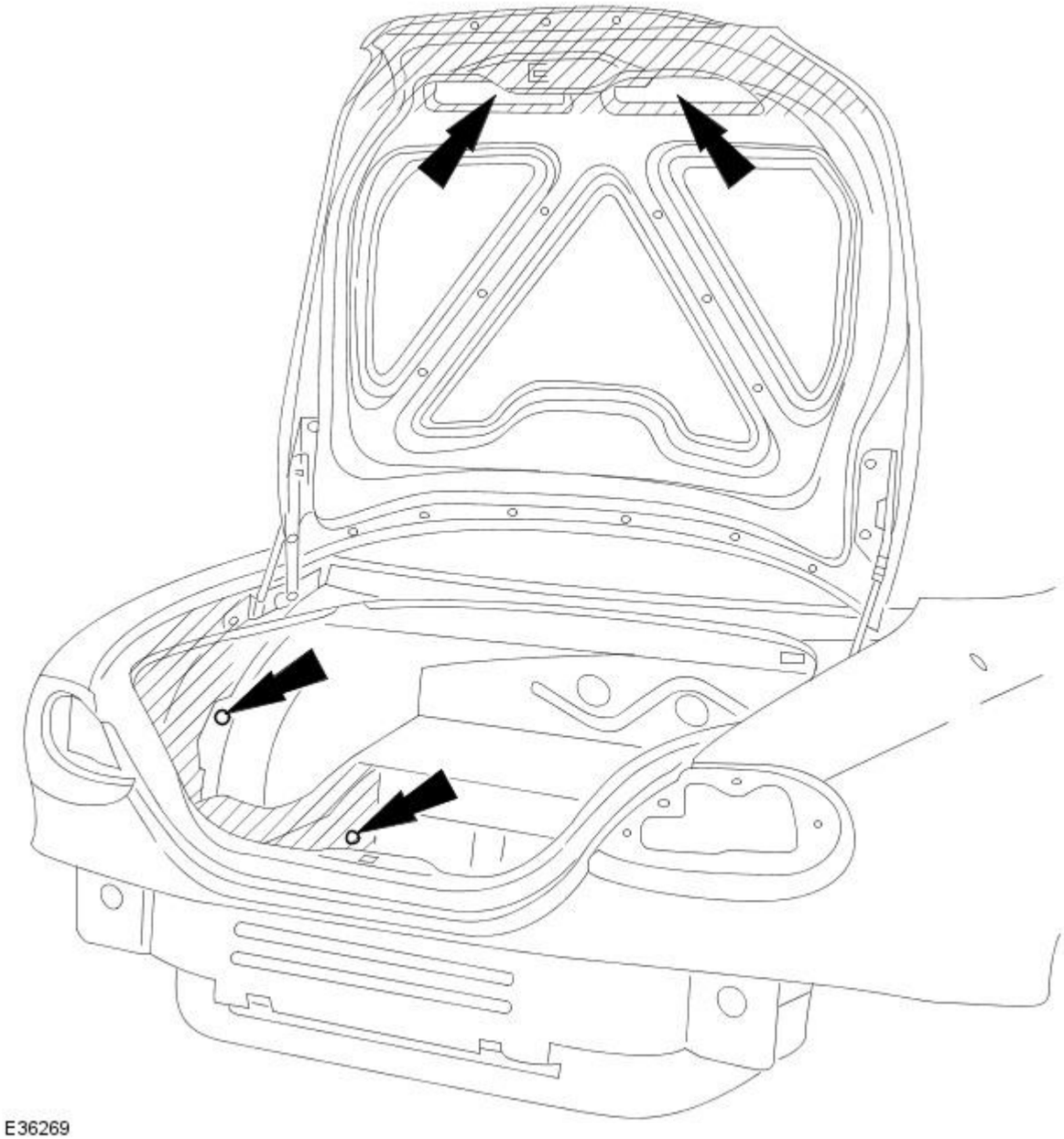

Rear Fender Inner Wax Injection Points

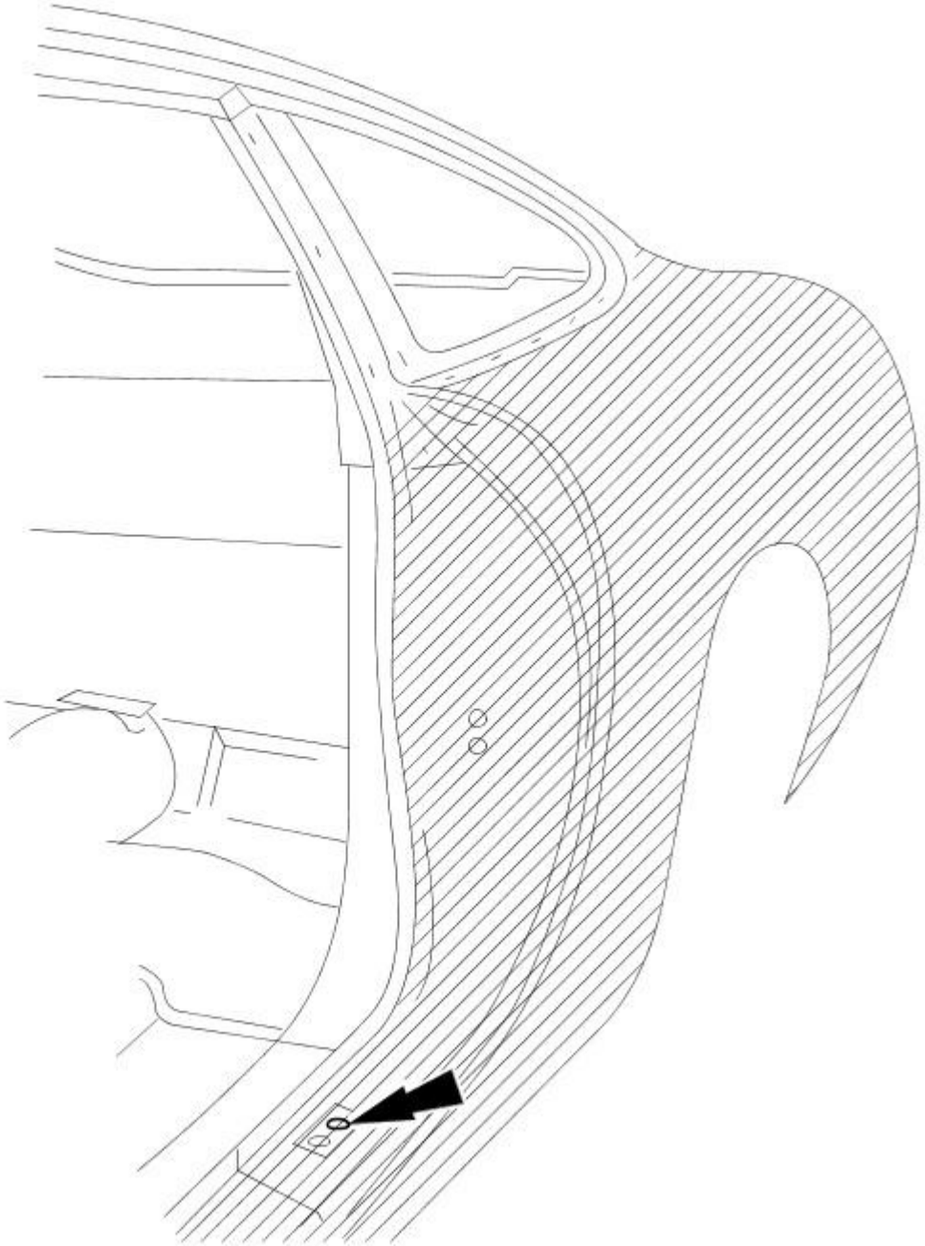

Rear Quarter and Seat Pan Wax Injection Points

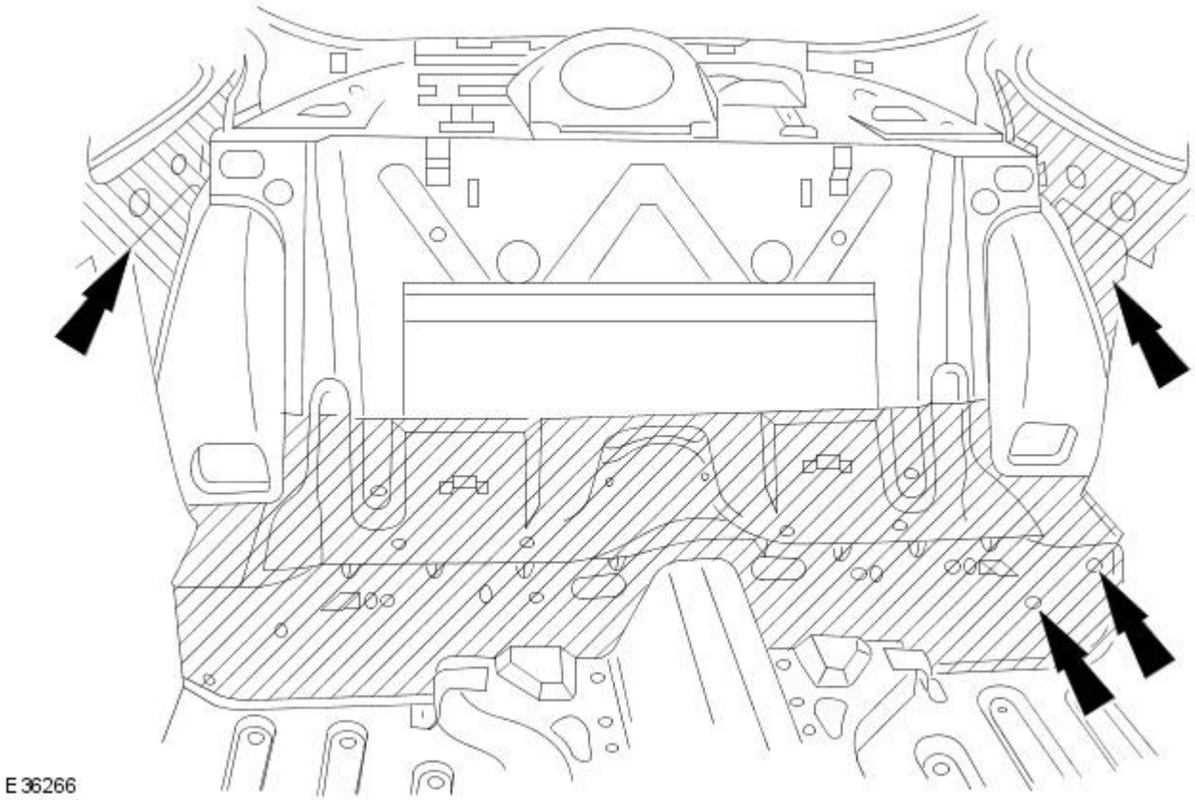

Rear Longitudinal Wax Injection Points

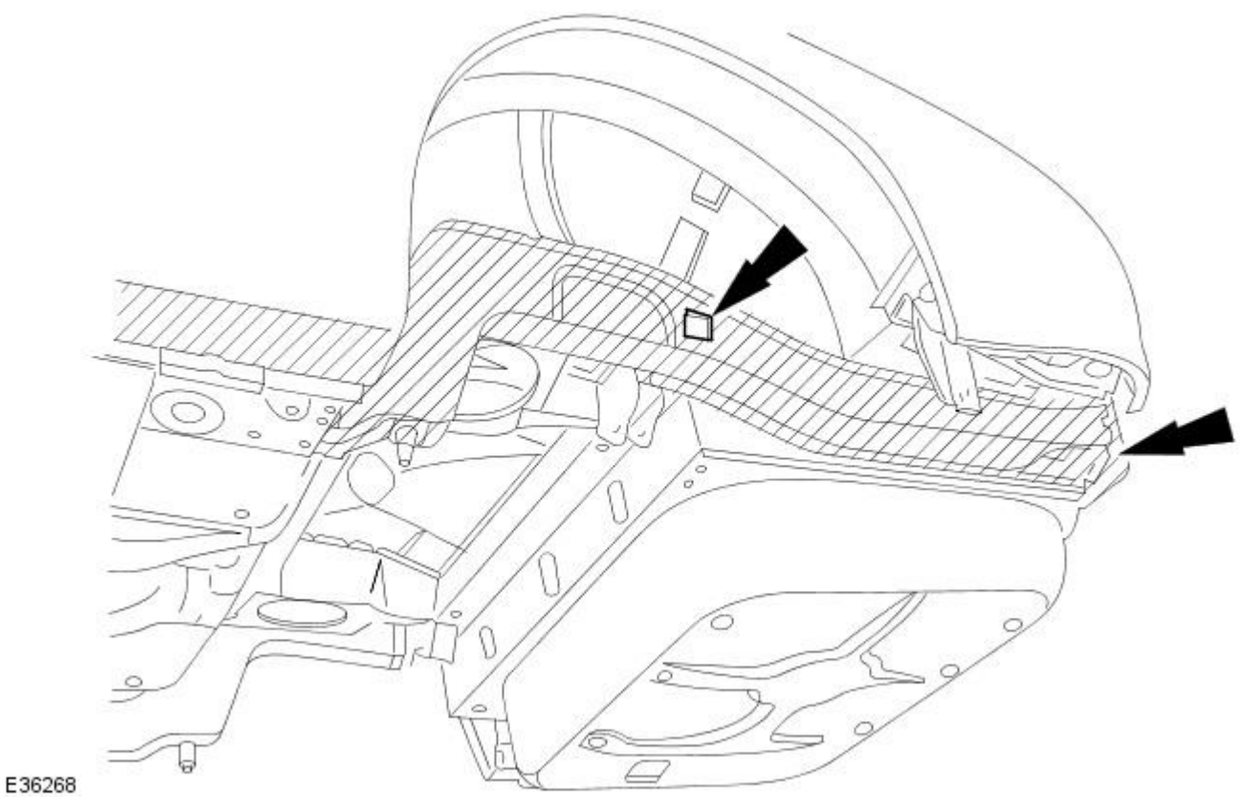

BODY UNDERSEAL

Underseal Application

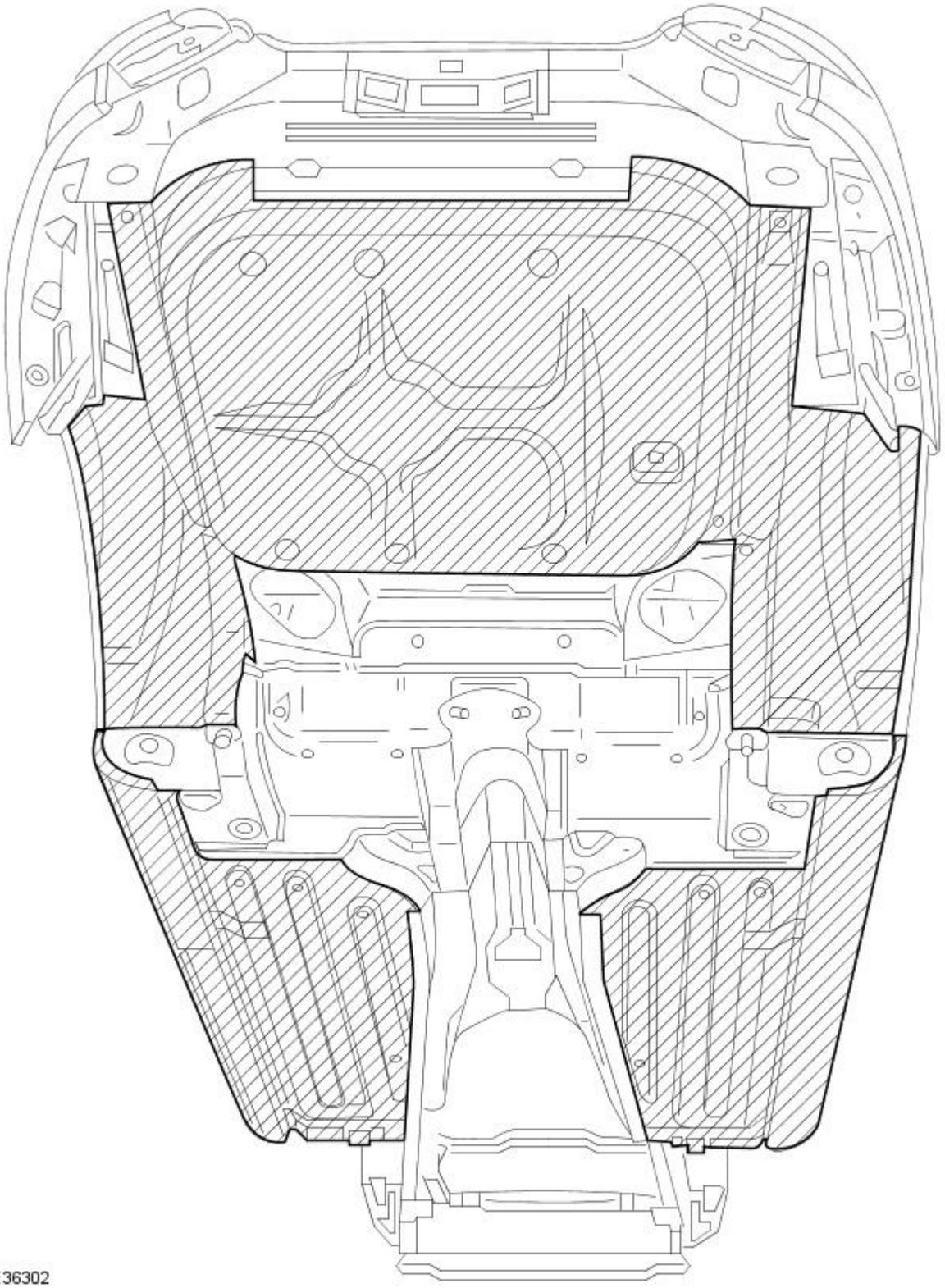

E36302

CAUTION: Do not apply underseal to hot or rotating components.

Underseal should be applied as indicated by the hatching and omitted from areas indicated in solid black.

APPROVED PAINT SYSTEMS

The manufacturer's paint systems listed below are currently approved for refinishing Jaguar vehicles.

• NOTE: * Not available in certain markets but alternatives may be used, provided that they comply with the following company standards.

Manufacturer	Bare metal etch primer	Primer surfacer	Base color coat	Clear lacquer
Akzo Sikkens	Washprimer	Autocryl / Autonova	Autobase	Autoclear 1000 - 3000 Automat
Dupont			Centari 600*	Centari 600*
Spirit	Wash Etch+		• System 54 (solid/metallic) • System 56 (micatallic) • System 59 and 60 (pearl)	Clear lacquer 923-85

CAUTION: To avoid damage to the vehicle interior, trim and plastic items, effective panel temperature must not exceed 95°C during paint cure process.

Product type	Applicable Standard
Bare metal etch primer	JMS 20.29.06

Product type	Applicable Standard
Primer surfacer	JMS 20.29.11
Base color and clear lacquer	JMS 20.29.09

OBSCURATION BANDS

• NOTE: This process is not required on dark colored vehicles.

Unsightly areas visible between panels, through gaps and under bonded glass are masked by applying matt black paint with heat resistance of 40° to 120°C.

ANTI-THEFT LABELS

Original Components

On North American specification vehicles, the VIN is marked on all major external panels, certain structural members and power / transmission units. The labels carrying this information are known as 'Label-Anti-theft VIN (USA body panel only)' or 'Label-Anti-theft-Engine and Gearbox (U.S.A. only),' drawing reference A .

Replacement Components

Only genuine Jaguar replacement parts must be used in the repair of a vehicle. Furthermore, any new parts replacing items carrying a VIN label must have either 'Label-Anti-theft Replacement Part (USA body panel only)' or 'Label-Anti-theft Replacement Part-Engine and Gearbox (U.S.A. only),' drawing reference B , fitted in a different location to the previous label.

A protective mask used to prevent the replacement part label from being damaged or obscured during the refinishing / protection processes, must be removed prior to customer hand-over.

Procurement

Anti-theft labels may only be ordered from Jaguar Cars through :

Product Compliance Dept., Jaguar Inc., 555 MacArthur Blvd., Mahwah NJ 07430

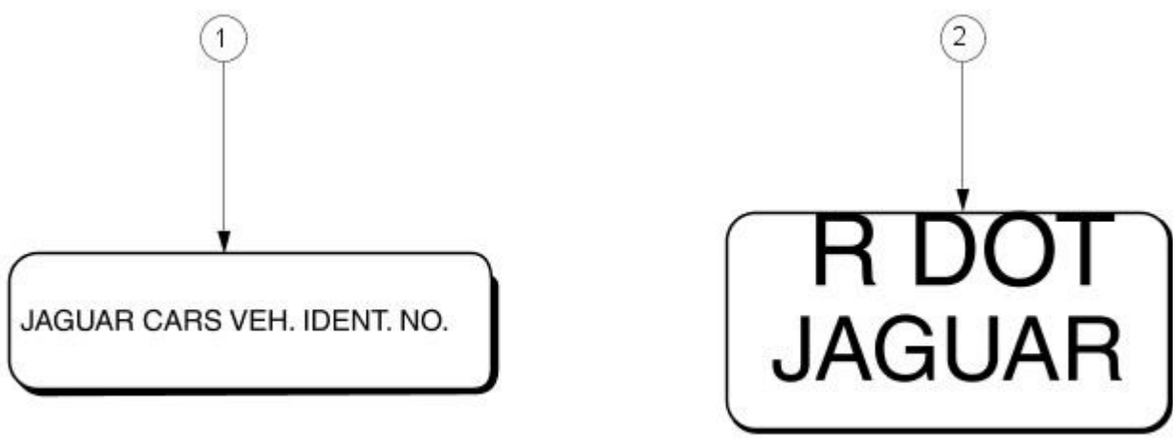

E36326

Label Fitting Process

CAUTION: It is a requirement of United States of America federal law that the protective mask is removed from all anti-theft labels after performing painting and rustproofing operations. Failure to comply with this requirement may render both the manufacturer and the dealer in violation of the law.

• NOTE: Any attempt to remove an anti-theft label will destroy that label. Ensure correct location before affixing.

Using a suitable solvent clean the area where the anti-theft label is to be affixed. Peel the backing from the label and position on the panel. Carry out all refinishing / protection processes. Remove the anti-theft label protective mask prior to vehicle handover to the customer.

APPLICATION OF STONE CHIP PROTECTION

Apply approved material to the areas indicated by hatching.

GLAZING

In order that the design condition of the vehicle is preserved when direct glazing repairs are carried out, it is essential that only approved materials and processes are employed.

Glass and Body Preparation

Betaseal HV3 System methods and materials, are used on all Jaguar vehicles. Ease of working and extended process time can however be gained by ensuring that the vehicle body and replacement glass are at a minimum room temperature of 20°C prior to adhesive application and fitting.

In the event of damage to the body flange finish, rectify as appropriate with the full paint refinishing process as described in the Paint Refinishing Manual.

Adhesive Application Temperature

The specified adhesive has a high viscosity and is not easily applied at 'room temperature' using conventional methods. When the adhesive is applied it chills rapidly on contact with the body and reverts to the hard condition, providing retention strength within minutes.

Raising the temperature of the adhesive will reduce viscosity and speed up the flow. It is recommended that the adhesive is pre-warmed in a heated cabinet for a minimum of twenty minutes and applied with an extrusion gun incorporating integral heating elements.

Temperature Effect	Temperature Range	Application time - including positioning
Optimum	60°C - 70°C	4 minutes
Maximum	75°C	4 minutes
Minimum	35°C	Will not bond

Adhesive Application

CAUTION: The glass will not bond to the body if the time taken to apply the adhesive and position the glass, exceeds the stated limit.

• NOTE: The depth of the glass and thus the thickness of the adhesive, is controlled by the screen rubber contacting the body flange.

It is recommended that the bead of adhesive conforms to the shape and dimensions shown in the Adhesive Application illustration and is positioned along the edge of the rubber.

Adhesive Application

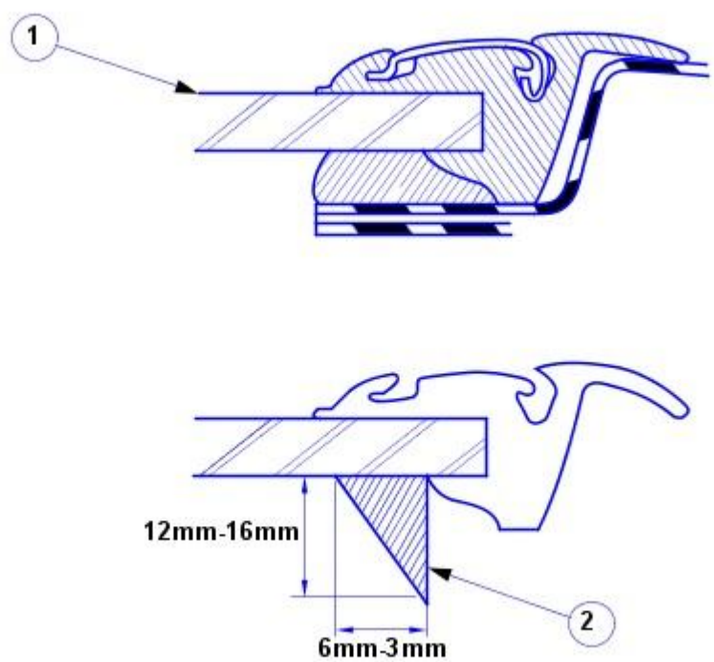

E36330

Key to Adhesive Application Drawing

1	Fitted condition
2	Bead application

Adhesive Curing

The specified adhesive cures by exposure to moisture (not by heat). Cure times may vary considerably dependent upon ambient humidity levels. Initial 'chill off' will occur within 1 to 4 minutes (dependent upon the application temperature and rate of cooling), after which the screen must not be moved.

BUMPER REPAIR\RENEWAL

Bumper Description

Each bumper comprises a beam mounted to the body via two strut assemblies and a moulded polypropylene cover incorporating side armatures and chrome plated plastic upper trims. The front bumper cover which is moulded to form a lower air intake for the cooling pack, also incorporates twin fog lamps, and side marker lamps or reflectors (dependent upon market). A plastic undertray secured to the lower edge of the front bumper and the body improves airflow and minimises the ingress of road grime in that area. Standard bumpers have glass mat thermoplastic (GMT) beams mounted on GMT struts. For certain markets, aluminium bumper beams are installed on menasco energy absorbing struts.

Bumper Cover Repair

Prior to commencing any work, bumper damage should be assessed for repairability and categorized in accordance with the following guidelines. Bumper covers that are torn or holed are not repairable and must be discarded.

CAUTION: Cosmetic appearance must not jeopardise safety. No attempt must be made to repair bumper covers damaged beyond category three. Damage of this extent will compromise the protective performance of the cover and it must be renewed. The thermo-setting nature of the cover material, precludes the repair of splits by heat or welding techniques.

Category	Damage
Cosmetic	Abrasion to surface paint finish only
Substrate surface	Deep scratches, gouges or localized radial stress cracks.
Substrate penetration	Splits not exceeding 100mm. Splits radiating from a gouge and accompanied by localized stress cracks.

Repair Materials

Repair of accepted damage for categories 2 and 3 may be carried out using 3M '5900 FPRM' (Flexible part repair material) or Kent Industries 'Urepatch'. Repair product manufacturers' recommendations and procedures must always be strictly followed.

Bumper Cover Refinishing

The paint refinishing system must be approved by Jaguar Cars Ltd., and be appropriate for polyurethane substrate application. It is essential that the finishing clear lacquer includes a plasticising ingredient (mixed to the manufacturer's recommendation) that will achieve the 'semi-flex' condition of the factory finished item.

Bumper Cover Support

CAUTION: During heat cure, the effective panel temperature must not exceed 95°C.

Exposure to heat decreases bumper cover rigidity. Covers removed for repair must therefore be supported to prevent distortion and sagging during the paint curing process. Where the original bumper cover has been repaired, the beam will provide sufficient support for the centre section. It is recommended that the side armatures are supported as they would be on the vehicle. If a new cover is required, the beam may be temporarily fitted to provide the necessary support during refinishing.

Simple Jig Construction for Bumper Cover Support

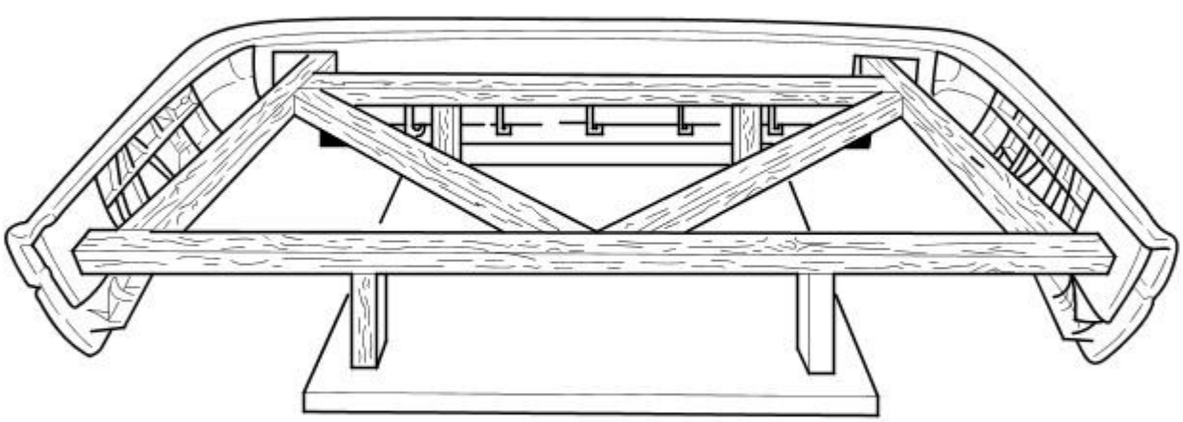

E36331

Replacement Bumper Covers

Replacement covers are supplied in a primed condition and must be finished to match the vehicle in accordance with the procedures included in this section..

Bumper to body Alignments and Clearances

New bumper covers and beams and replacement fixings such as bumper beam adjusters and guide blocks must be fitted and adjusted to achieve the following alignments and clearances:

Front Bumper to Hood Clearance

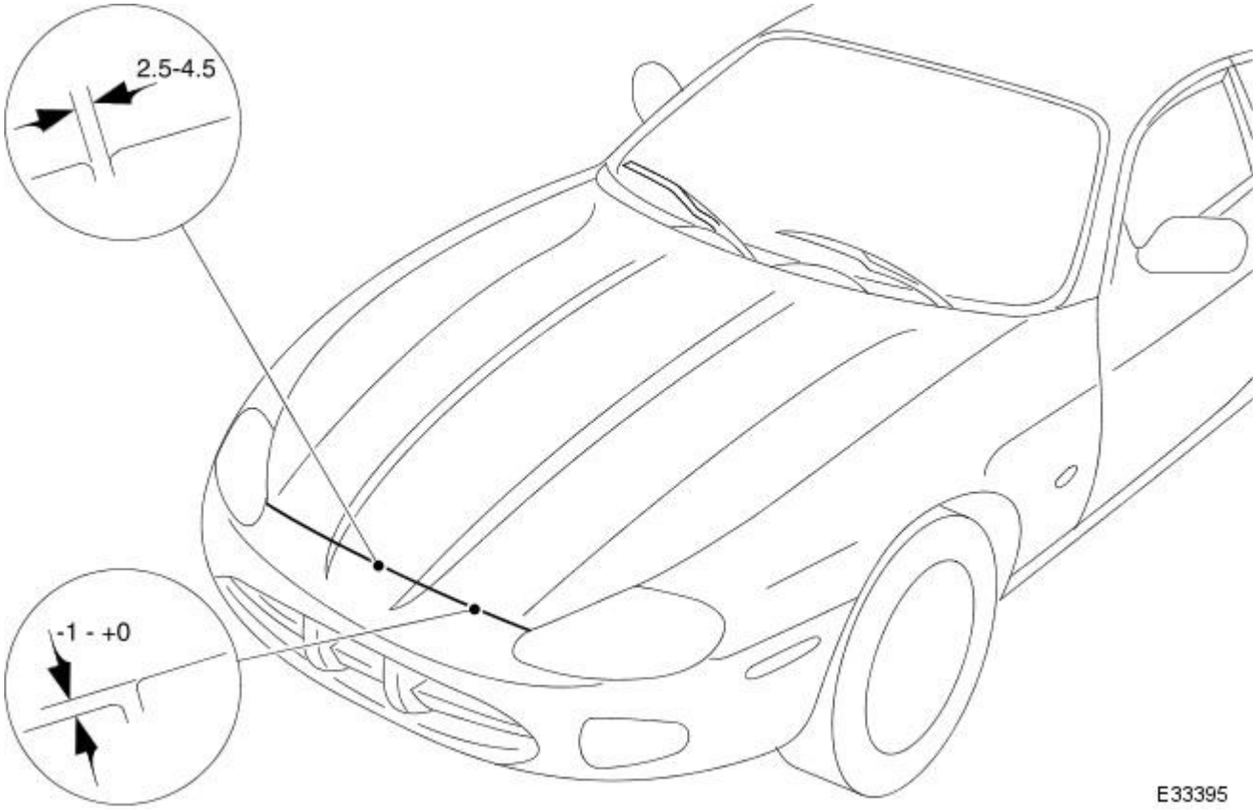

Front Bumper to Headlamp Clearance

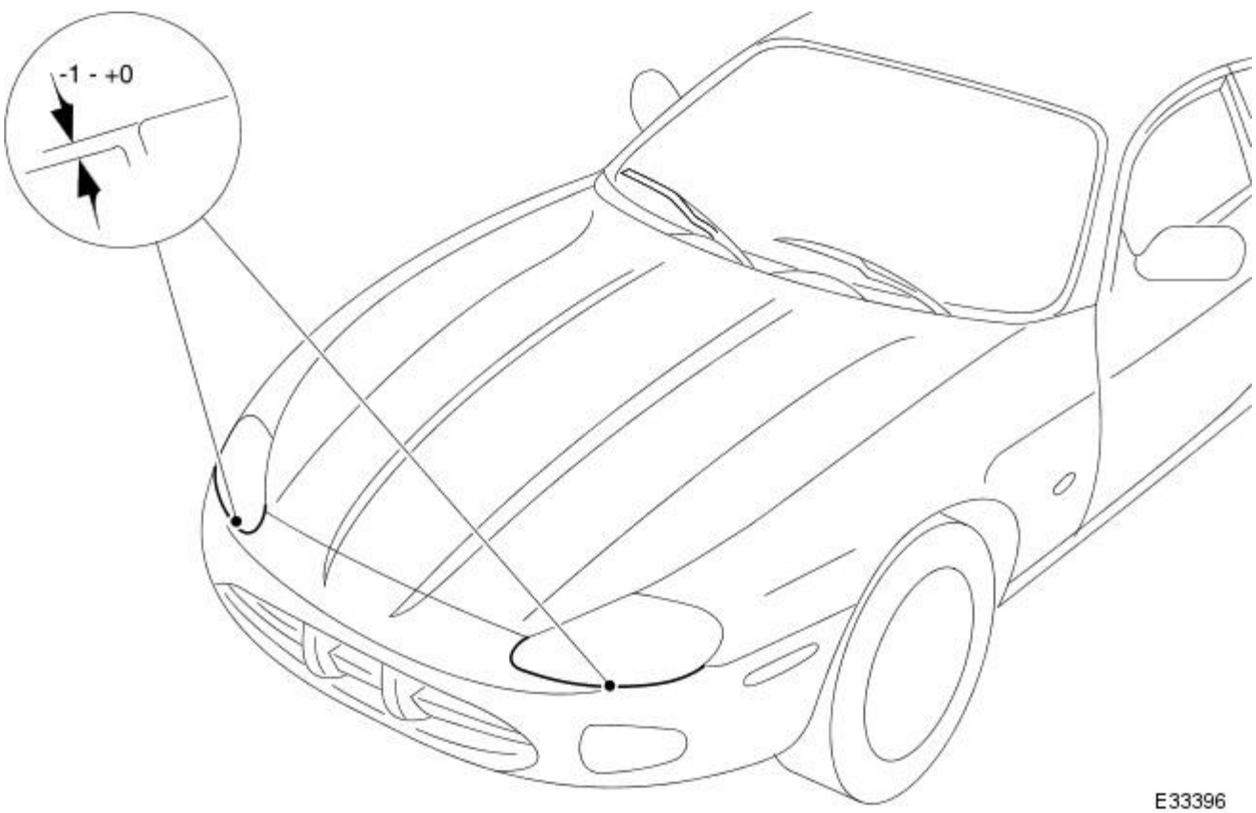

Front Bumper to Fender Alignment

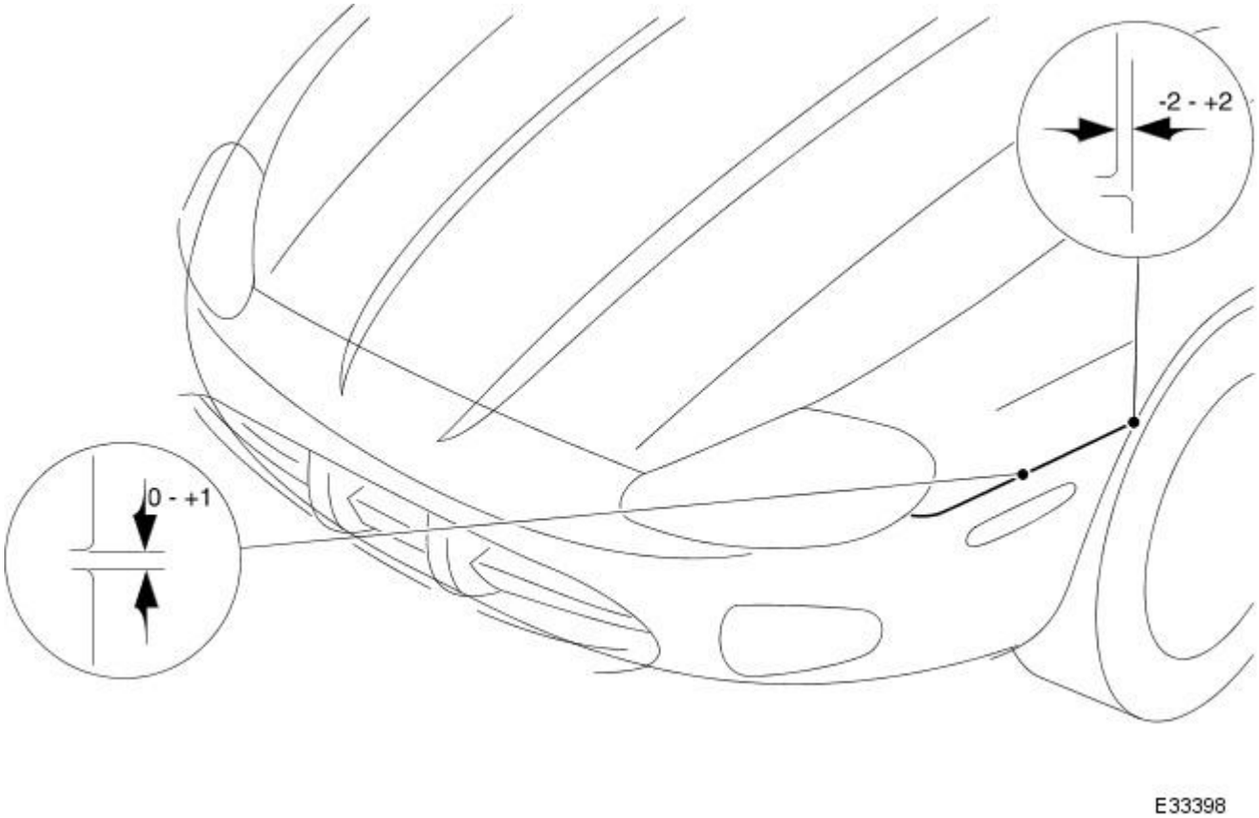

Front Bumper to Splitter Vane Clearance and Alignment

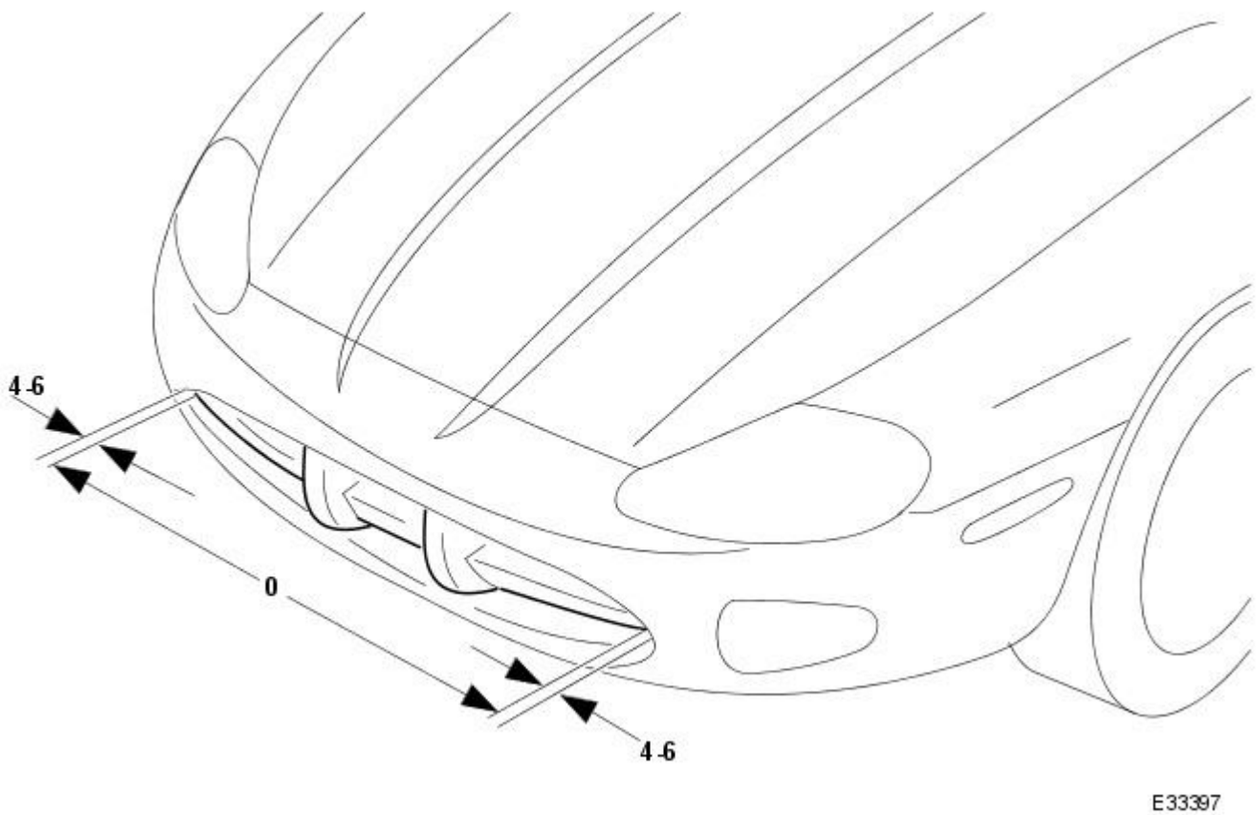

Rear Bumper to body Clearance

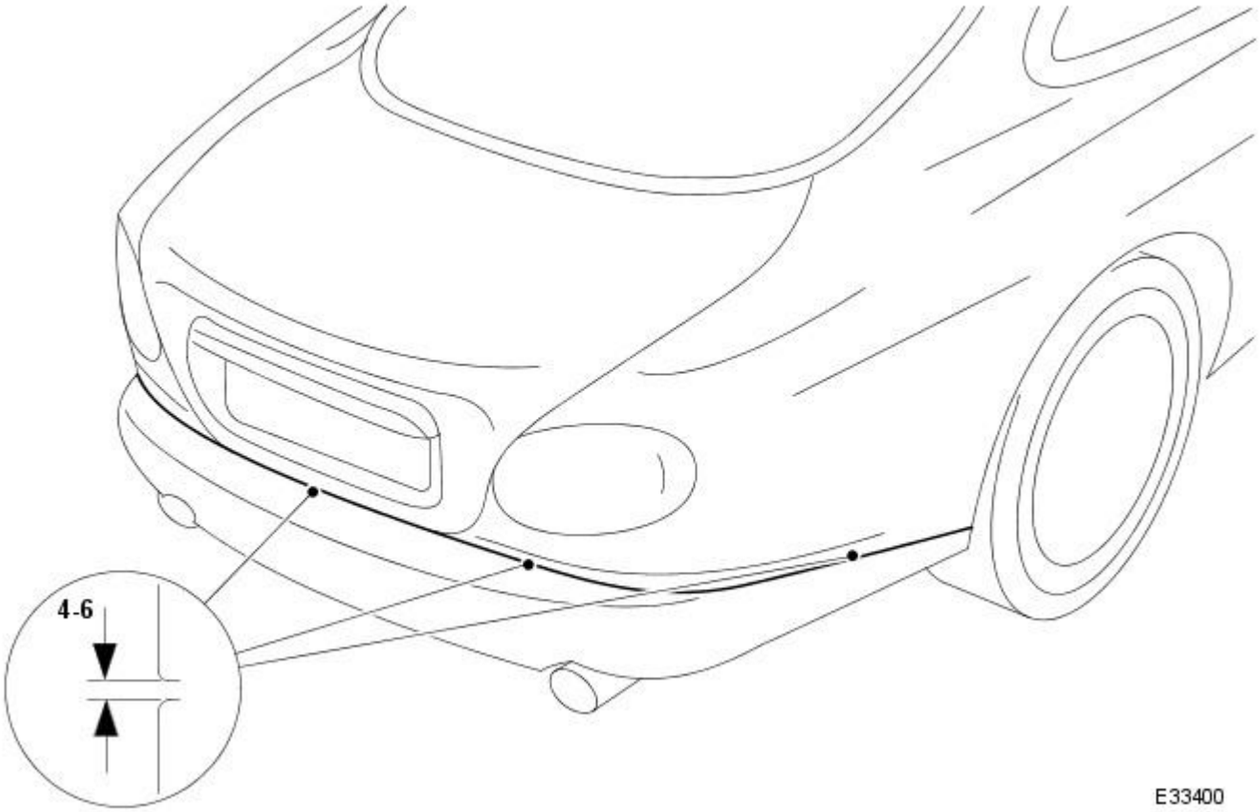

Rear Bumper to Wheel Arch Alignment

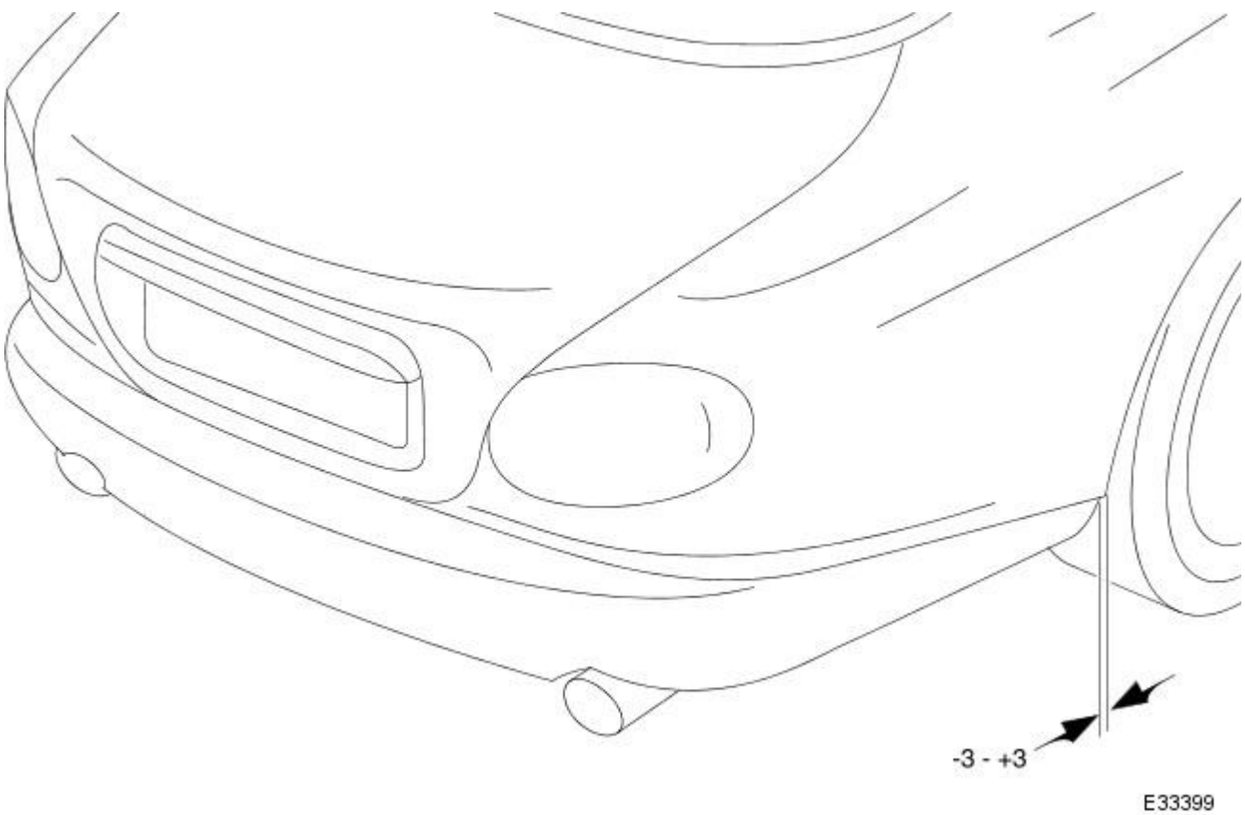

Recycling of Bumper Materials

The aluminium bumper beams fitted for some markets, should not be over-looked as components suitable for recycling.

Replacement bumper cover assemblies includer side armatures, which should be removed from discarded bumper assemblies and routed for recycling.

General Clearances and Alignments

When any panel, closure or body component is renewed, refitted or reset, the specified clearances and alignments must be restored. This ensures that vehicle appearance and operation fully satisfy design intent and the customer.

Clearances

Gaps should be uniform around body panel contours and must be parallel to within 1mm in a 400mm linear measurement. Panels centered between two adjacent panels must have equal gaps on either side. For exceptions to this, refer to the appropriate specification. Gaps between adjacent panels or components must not expose harnesses, labels, brackets or visually poor joint or assembly conditions.

• NOTE: Sliding roof panel clearances are specified without the edge seal installed.

Areas of particular concern are, fuel filler flap, trunk lid to fenders and saddle panels, hood to fenders, grill and headlamps, sliding roof to main roof panel, door gaps at fenders, B\C posts, roof drip rail and rocker panel, and bumper cover to fenders and cross car assemblies

Alignment

Panels must be correctly profiled to maintain cosmetic appearance, and ensure correct seating of seals with minimal wind noise. Areas of particular concern are hood to fenders , trunk lid to fenders and saddle panels, doors to apertures, doors to fenders and adjacent doors and relationship of the sliding roof panel leading and trailing edges to the main roof panel.

Exterior Fitments

Bezels, trims and lamps must be concentric with apertures and have equal clearances with adjacent panels.

Areas of particular concern are headlamp to hood, fender and trim panel, exhaust tailpipe trim to bumper cover cut-out, rear lamp assembly to trunk lid, fender and bumper cover trim, and side feature lines including body side mouldings, fender to door and door to door.

Uni-Body, Subframe and Mounting System - Front Axle Crossmember

Removal and Installation

Special Tool(s)	
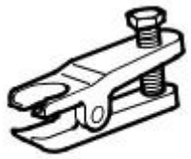 E36397	Tie-Rod-End Taper Separator 211-098 (JD 100)
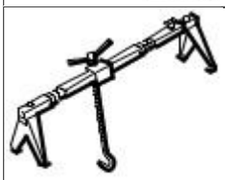 E36400	Engine Support Beam 303-021 (MS 53D)

Removal

• CAUTIONS:

Replacement of nuts and bolts: Various thread-locking devices are used on nuts and bolts throughout the vehicle. These devices restrict the number of times a nut or bolt can be used. See section 100-00 for information.

Do not attempt to weld or repair the aluminum crossbeam. If it is damaged, a new one must be installed.

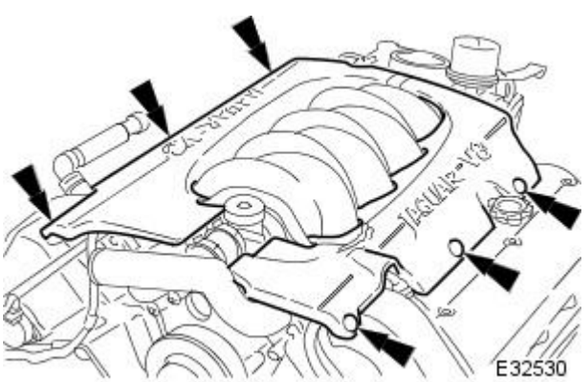

1. Position vehicle on a four-post lift.

2. Disconnect battery ground cable. Refer to section 414-01.

3. Open engine compartment to service position, and fit paintwork protection covers to fenders.

4. Remove both engine covers (normally aspirated vehicles only).

- Release pegs.
- Remove covers.

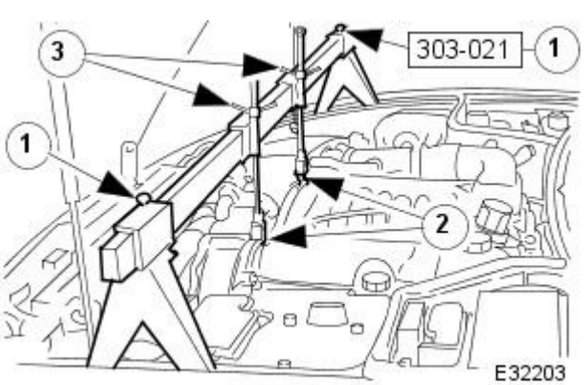

5. Support weight of engine.

1. Position special tool in RH and LH fender channels and tighten beam fixings.
2. Engage hooks into the engine front lifting eyes.
3. Tighten hook adjustment nuts until weight of engine is supported.

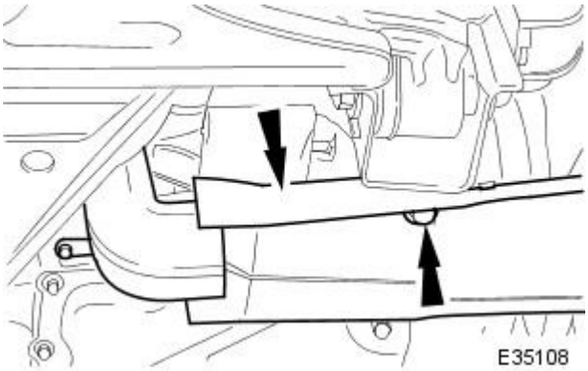

6. Remove generator front cooling duct.

- Remove bolt.
- Move duct rearwards to release tang from undertray.
- Release front duct from rear vertical duct.

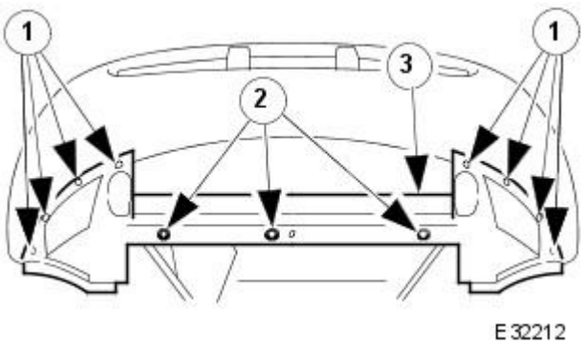

7. Remove undertray.

1. Remove and discard eight scrivets.
2. Remove three screws.
3. Remove undertray.

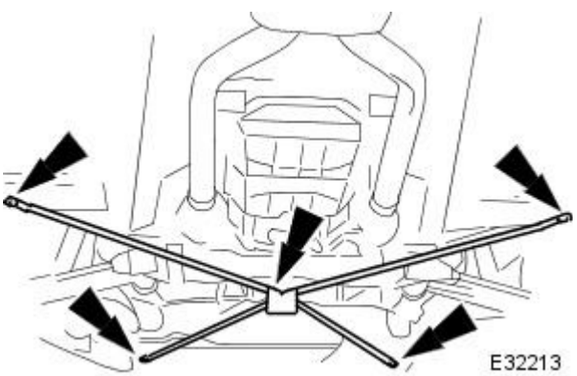

8. Remove cruciform strut (convertible vehicles only).

- Remove four bolts.
- Remove cruciform strut.

9. Raise front of vehicle and support on stands. Refer to section 100-02.

10. Remove front wheels. Refer to section 204-04.

11. Drain brake fluid from both front brakes.

1. Remove dust cap.
2. Connect pipe to bleed nipple, and insert pipe into a fluid container.
3. Undo bleed nipple sufficiently, to allow brake fluid to drain.

- Pump brake pedal until brake fluid stops draining.
- Tighten bleed nipple, remove pipe, and fit dust cover.
- Repeat procedure on opposite-side brake caliper.

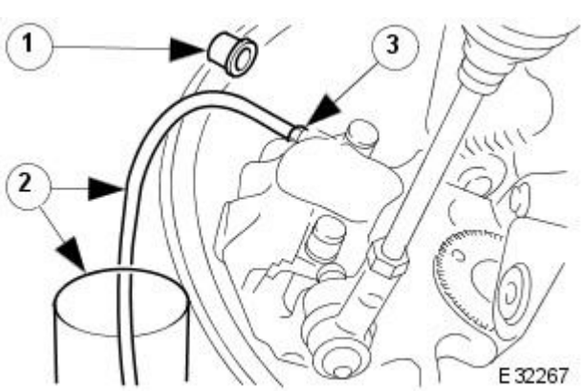

12. Disconnect both front brake hoses from brake tubes.

1. Undo union nut connecting brake tube to brake hose.
2. Remove locknut securing brake hose to bracket and release brake hose.

- Fit blanking plugs to brake hose and tube.
- Repeat procedure to disconnect opposite-side brake hose.

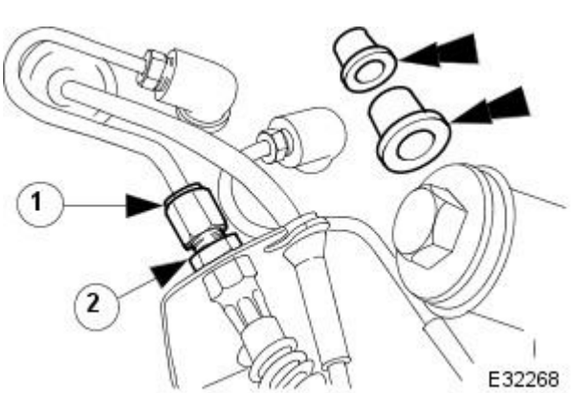

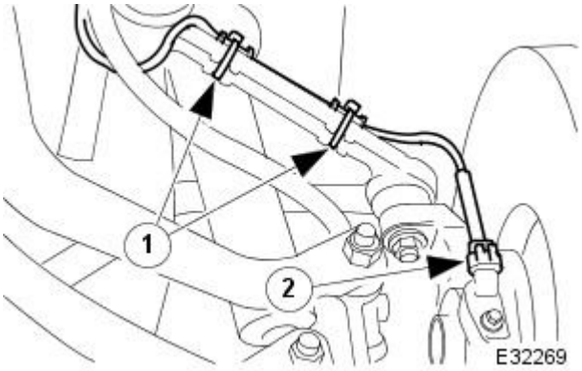

13. Disconnect connectors from both front ABS sensors.

1. Remove tie straps securing ABS harness to upper wishbone.
2. Disconnect connector.

- Repeat procedure to disconnect opposite-side ABS sensor.

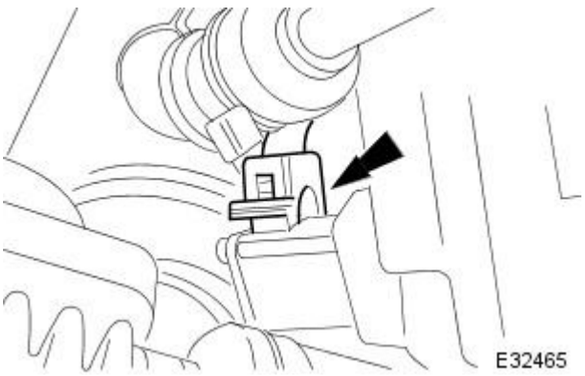

14. Disconnect electrical connector from steering rack transducer.

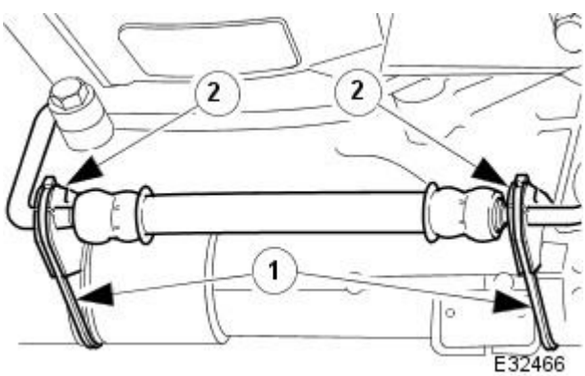

15. Release hose from steering rack.

1. Remove tie straps.
2. Remove insulation rubbers.

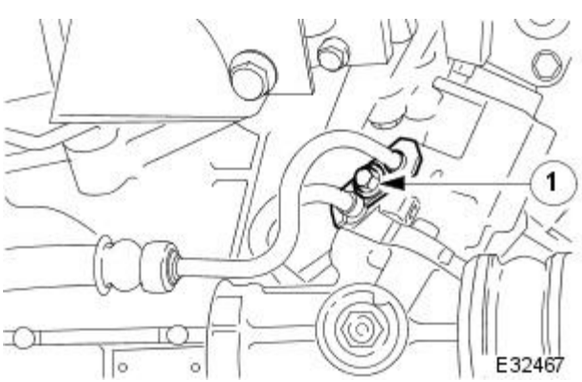

16. Release hose retaining plate from pinion housing.

1. Remove bolt.

- Move retaining plate along hose.

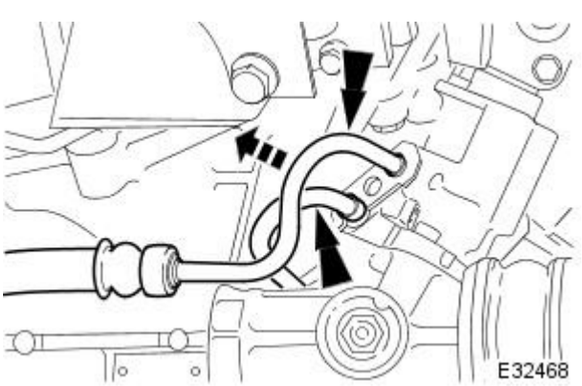

17. Drain power steering fluid.

- Position drain pan under pinion housing.
- Disconnect hoses and allow fluid to drain.
- Remove and discard 'O'-ring seals from hoses.
- Fit blanking plugs to hoses and pinion housing ports.

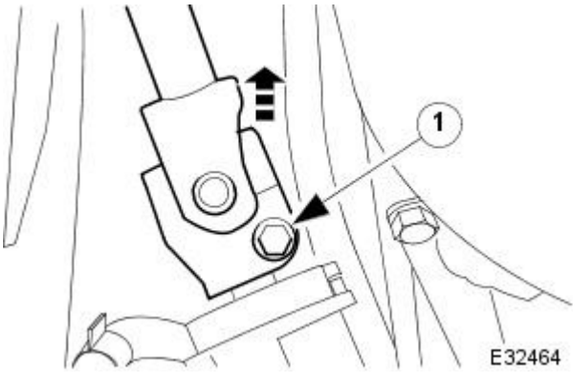

18. NOTE: Make sure steering is in the central position.

Release steering column from pinion shaft.

1. Remove bolt.

- Move column upwards to release it from pinion shaft.

19. CAUTION: To prevent damage to the crossbeam, place a piece of wood between the jack and crossbeam.

Using a suitable jack, support weight of crossbeam.

20. Remove both front mounting brackets from the crossbeam.

1. Remove front bolts (one bolt on convertible vehicles).
2. Remove rear bolt.
3. Remove bracket.

- Repeat procedure to remove opposite-side bracket.

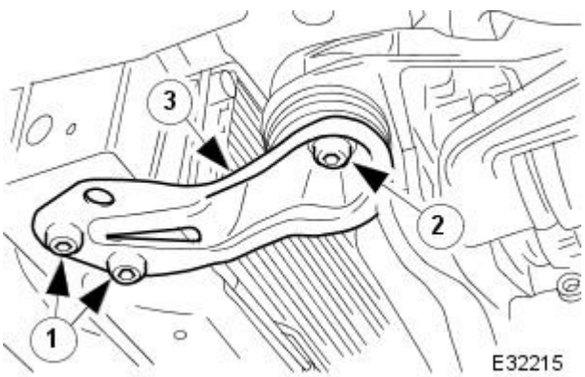

21. Release both front engine mountings from crossbeam.

- Remove bolt.
- Repeat procedure to release opposite-side mounting.

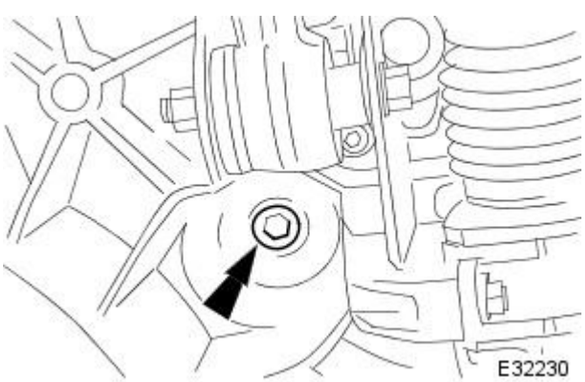

22. CAUTION: Do not allow the weight of the hub assembly to hang on the ball-joints. Support the weight of the hubs before releasing the shock absorbers.

Release both front shock absorbers from the lower mountings.

- Remove nut and bolt.
- Repeat procedure to release opposite-side shock absorber.

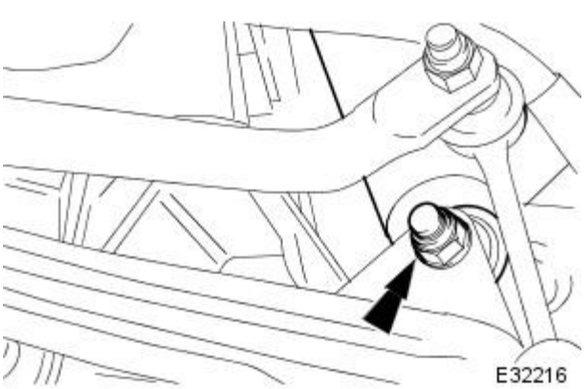

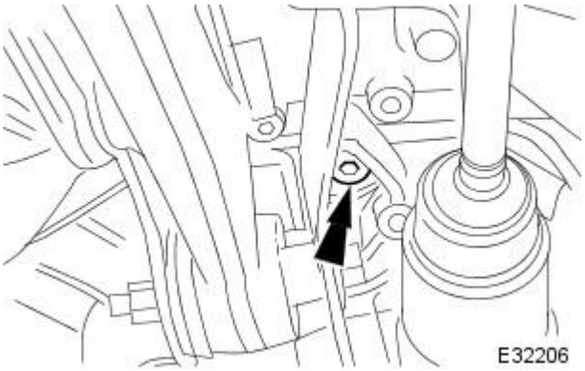

23. Release crossbeam rear mountings from chassis.

- Remove mounting center bolt.
- Repeat procedure to release opposite-side mounting.

24. With assistance, lower crossbeam, and place it on a workbench.

25. Release both links from stabilizer bar.

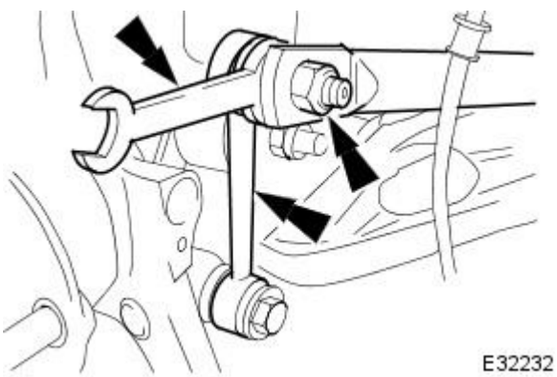

- Remove nut, use an open-ended spanner on the ball-pin flats to prevent the rubber cover from twisting.
- Release link.
- Repeat procedure to release opposite-side link.

26. Remove stabilizer bar from crossbeam.

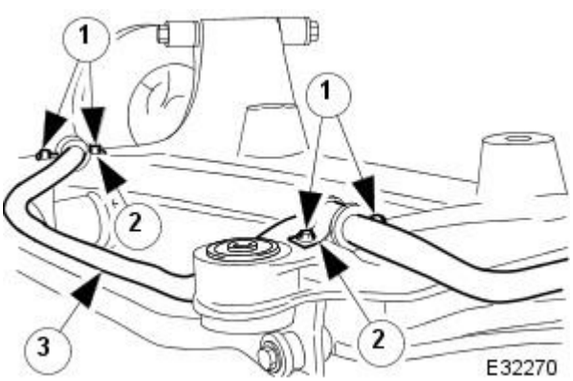

1. Remove bolts.
2. Remove mounting brackets.
3. Remove stabilizer bar.

27. Remove nuts from both tie-rod-ends.

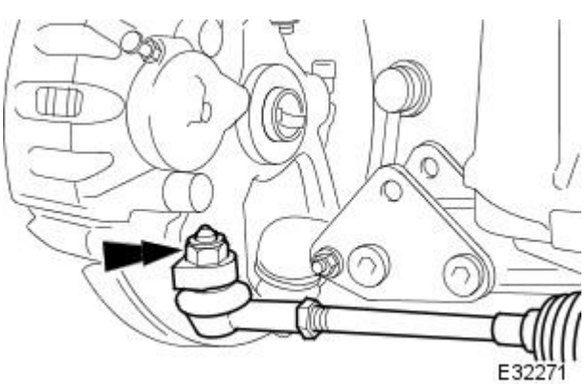

- Remove nut.
- Remove opposite-side, tie-rod-end nut.

28. Release both tie-rod-ends from steering arms.

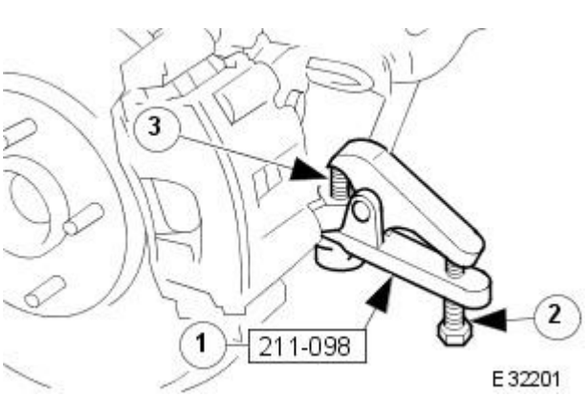

1. Fit special tool to tie-rod-end.
2. Tighten tool bolt to release tie-rod-end, taper-pin.
3. Remove tool and disengage tie-rod-end.

- Repeat procedure to release opposite-side tie-rod-end.

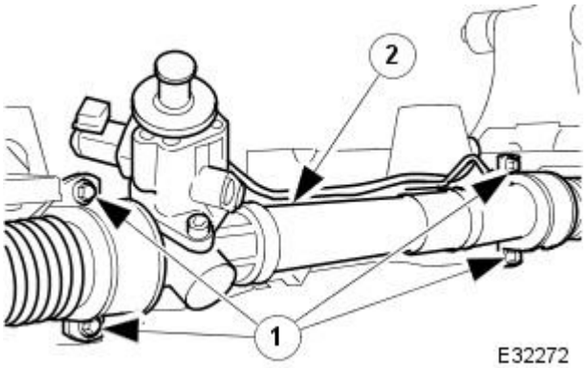

29. Remove steering rack from crossbeam.

1. Remove bolts.
2. Remove steering rack.

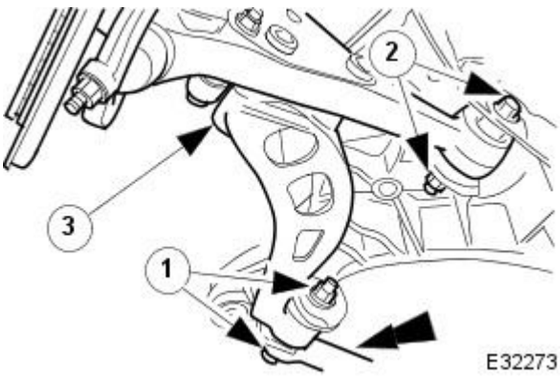

30. CAUTION: Note the position of the fulcrum bolts, as some vehicles are fitted with an eccentric bolt to the rear wishbone arm. See General Procedures section 204-01 for information.

Release both lower wishbones from crossbeam.

1. Remove nut and bolt from front arm of wishbone.
2. Remove nut and bolt from rear arm of wishbone.
3. Release wishbone from crossbeam.

- Repeat procedure to release opposite-side lower wishbone: collect fulcrum tie.

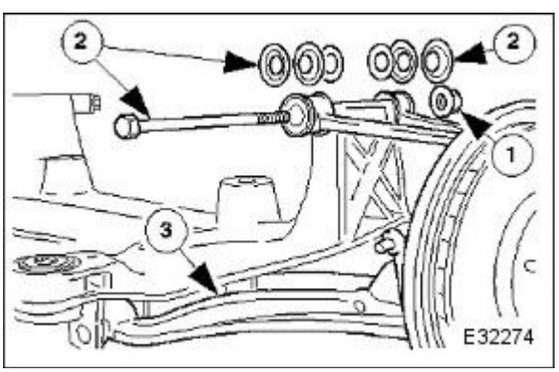

31. CAUTION: For installation reference, note position of washers and shims before removing fulcrum bolt.

With assistance remove both vertical link and wishbone assemblies from crossbeam.

1. Remove nut.
2. Remove fulcrum bolt: collect washers and shims.
3. Remove vertical link and wishbone assembly.

- Repeat procedure to remove opposite-side vertical link and wishbone assembly.

Installation

1. Fit front mounting bushes to crossbeam. Refer to operation 60.35.24.

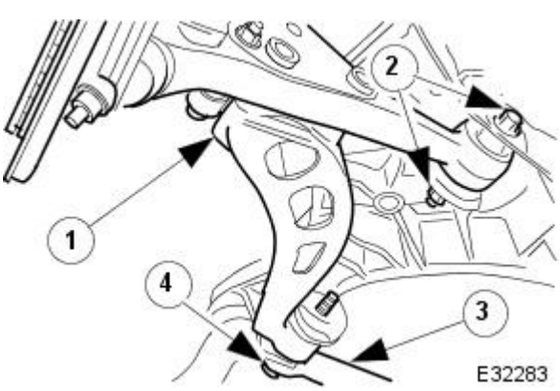

2. CAUTION: Support the hub assembly. Do not allow the weight of the hub assembly to hang on the ball-joints.

With assistance, fit the vertical link and wishbone assembly to the crossbeam.

1. Align lower wishbone to crossbeam.
2. Fit nut and bolt to wishbone rear arm: DO NOT tighten at this stage.
3. Align fulcrum tie to front arm of wishbone.
4. Fit front bolt to wishbone.

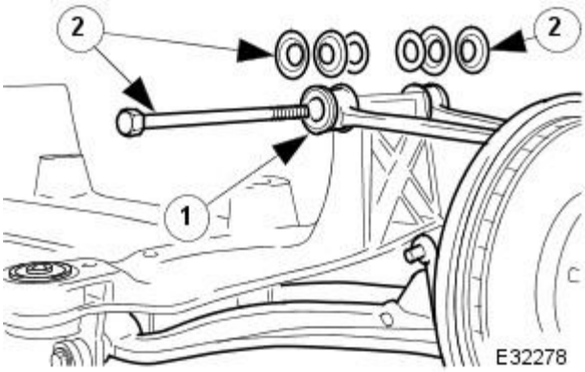

3. Fit upper wishbone to crossbeam.

1. Position wishbone to crossbeam.
2. Fit fulcrum bolt, also fit shims and washers in positions noted in removal.

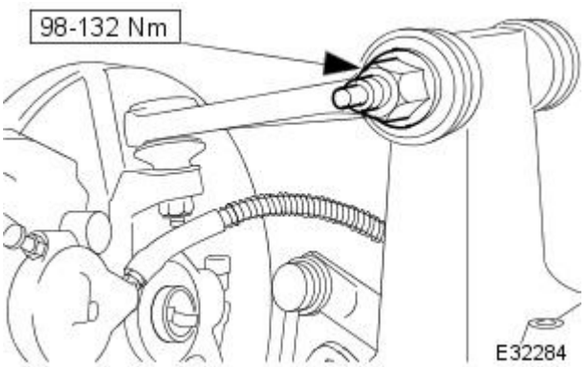

4. Fit and tighten upper wishbone fulcrum-shaft nut.

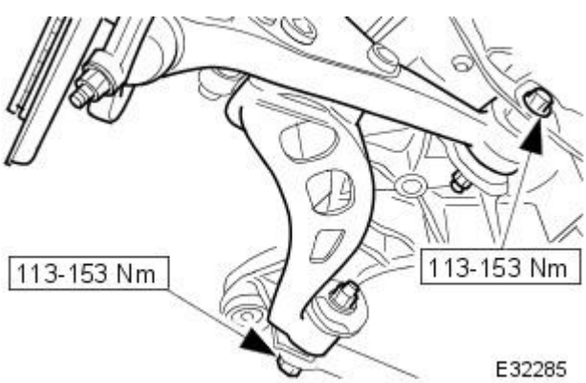

5. CAUTION: Make sure the fulcrum bolts are fitted in their original positions as noted in removal.

Tighten lower wishbone nuts and bolts.

- Raise wishbone to the horizontal position.
- Fit nut, and tighten front-arm fulcrum bolt.
- Tighten rear-arm fulcrum bolt.

6. Repeat four previous pictorial procedures to fit opposite-side wishbone and vertical link assembly.

7. NOTE: Make sure mounting rubbers are fully seated in stabilizer bar retaining bosses and crossbeam recesses.

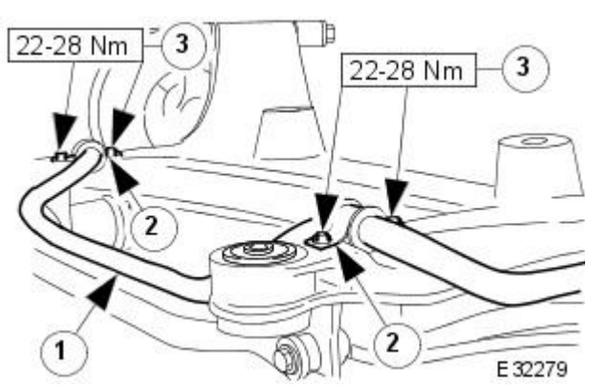

Fit stabilizer bar to crossbeam.

1. Position stabilizer bar to crossbeam.
2. Position mounting brackets.
3. Fit and tighten bolts.

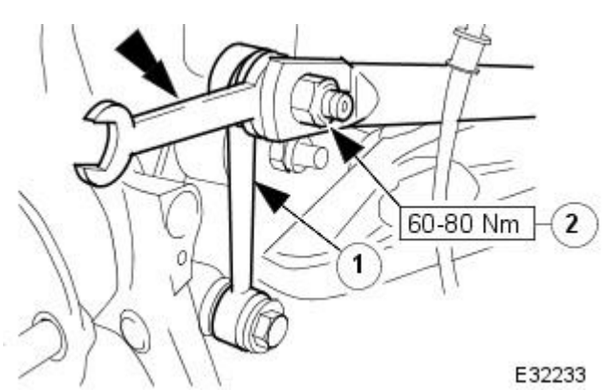

8. Fit links to stabilizer bar.

1. Position link to stabilizer bar.
2. Fit and tighten nut: use an open-ended spanner on the ball-pin flats to prevent the rubber cover from twisting.

- Repeat procedure to fit opposite-side link.

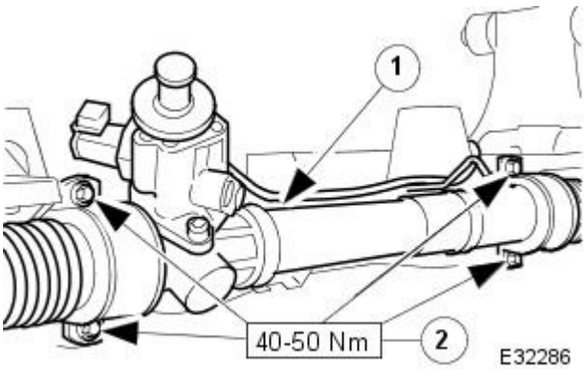

9. Fit steering rack to crossbeam.

1. Align steering rack to crossbeam.
2. Fit and tighten bolts.

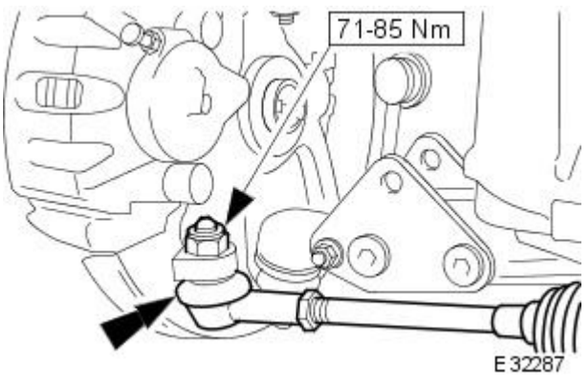

10. Fit both tie-rod-ends to steering arms.

- Insert tie-rod-end taper pin into steering arm.
- Fit and tighten nut.
- Repeat procedure to fit opposite-side, tie-rod-end.

11. CAUTION: To prevent damage to the crossbeam, place a piece of wood between the transmission jack and crossbeam.

With assistance, position crossbeam on jack, and align crossbeam to vehicle.

12. Secure crossbeam rear mountings to chassis.

- Fit and tighten mounting center bolt
- Repeat procedure to secure opposite-side rear mounting.

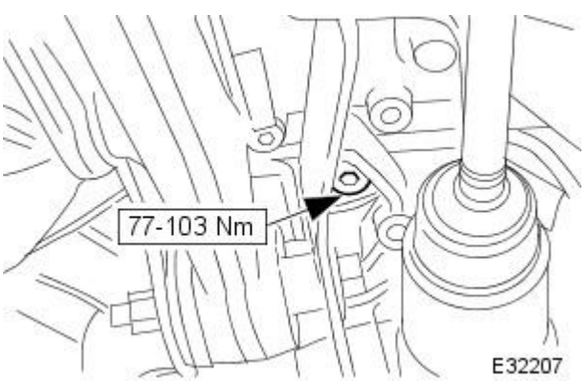

13. Fit shock absorbers to lower mountings.

1. Align shock absorber to mounting and fit bolt.
2. Fit and tighten nut.

- Repeat procedure to fit opposite-side shock absorber.

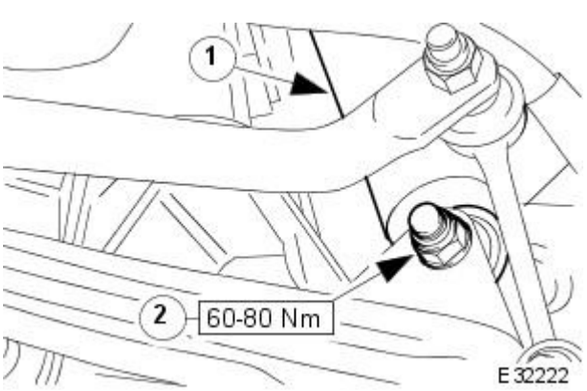

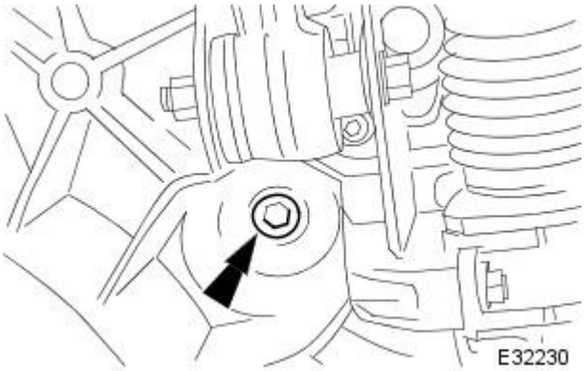

14. Fit front engine mounting bolts, but DO NOT tighten at this stage.

- Repeat procedure on opposite-side mounting.

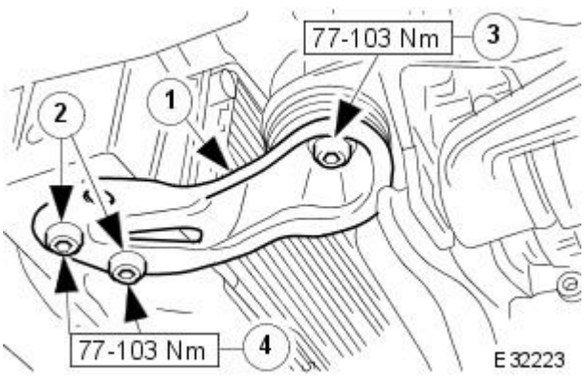

15. Fit crossbeam front mounting-brackets.

1. Align mounting bracket to crossbeam.
2. Fit front bolts: do not tighten at this stage, (one bolt on convertible vehicles).
3. Fit and tighten rear bolt.
4. Tighten front bolts.

- Repeat procedure to fit opposite-side mounting bracket.

16. Lower and remove jack from underneath crossbeam.

17. NOTE: Make sure steering wheel and wheels are in the central position before fitting steering column.

Fit steering column to pinion shaft.

- Move column downwards onto pinion shaft.
  1. Fit and tighten bolt.

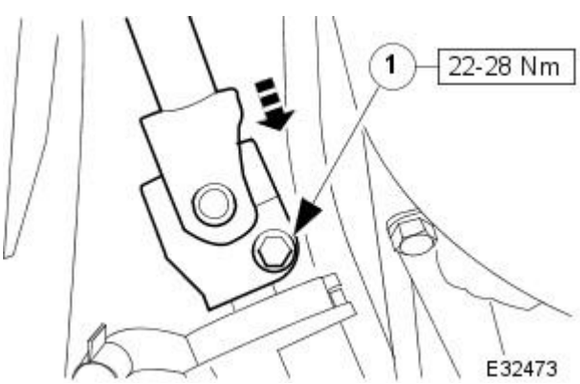

18. Remove blanking plugs from PAS hoses and pinion housing ports.

19. Connect return hose to pinion shaft housing.

- Apply clean PAS fluid to a new O-ring and fit to hose.
- Connect and fully seat hose.

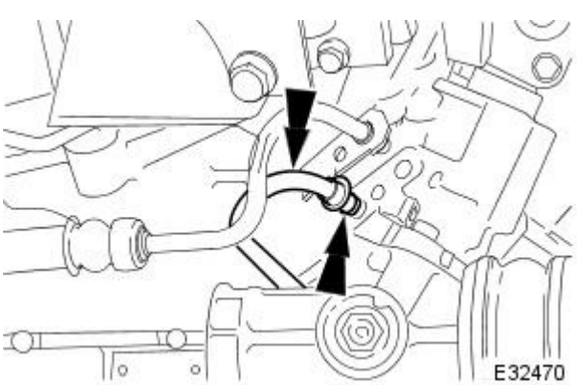

20. Connect feed hose to pinion shaft housing.

- Apply clean PAS fluid to a new O-ring and fit to hose.
- Connect and fully seat hose.

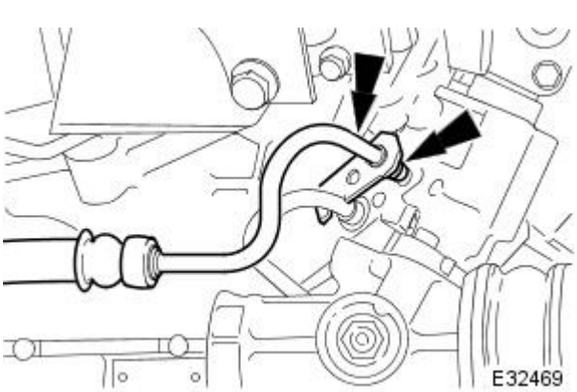

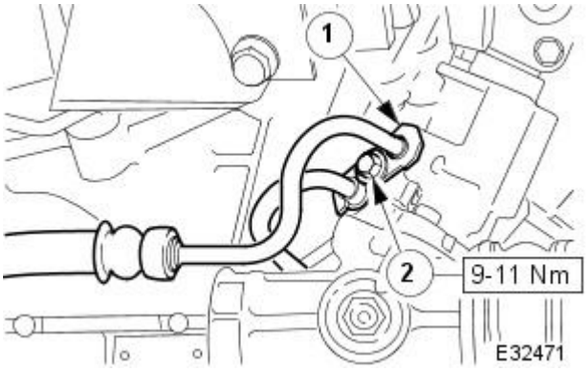

21. Fit retaining plate to pinion housing.

1. Align retaining plate and hoses.
2. Fit and tighten bolt.

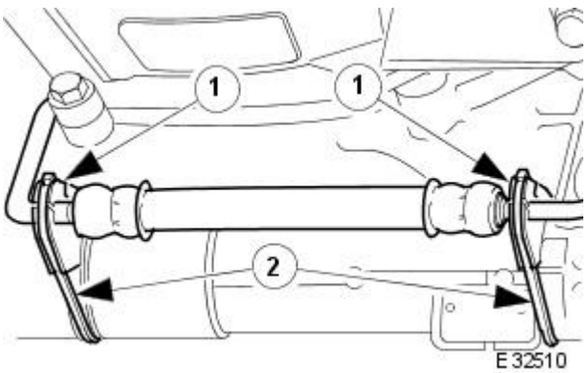

22. Secure PAS hose to steering rack.

1. Fit insulation rubbers.
2. Secure hose to steering rack with tie straps.

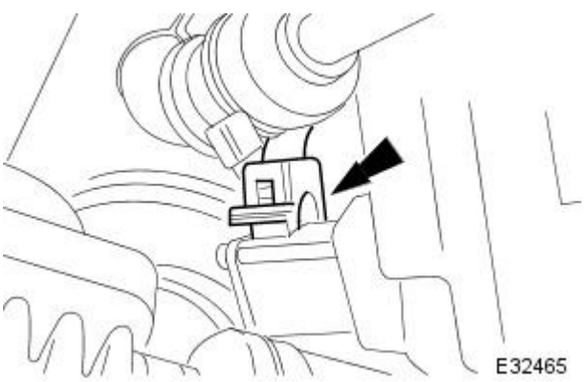

23. Connect electrical connector to steering rack transducer.

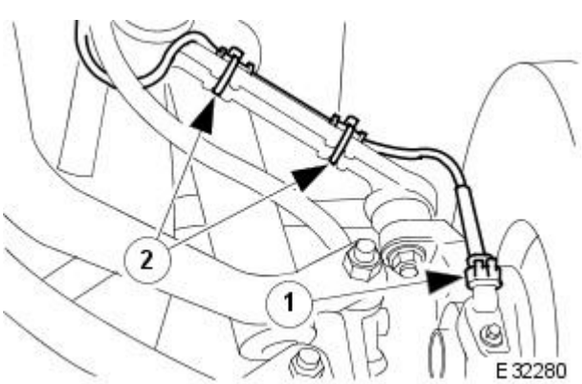

24. Connect ABS sensor connectors.

1. Connect ABS sensor connector.
2. Secure ABS harness to upper wishbone with tie-straps.

- Repeat procedure to connect opposite side ABS sensor.

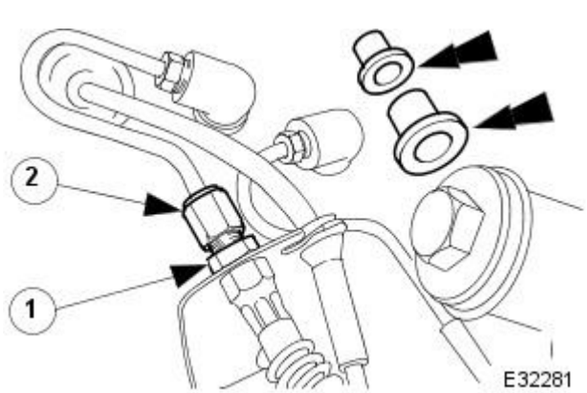

25. Connect brake hoses to brake tubes.

- Remove blanking plugs.
  1. Position hose to bracket and tighten locking nut.
  2. Connect brake tube to hose and tighten union nut.
- Repeat procedure to connect opposite-side brake hose.

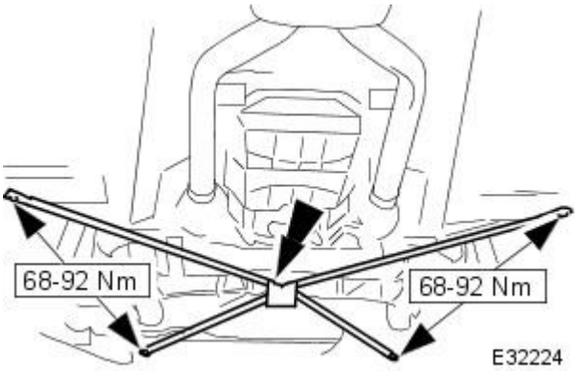

26. Fit cruciform strut (convertible vehicles only).

- Position cruciform strut.
- Fit and tighten bolts.

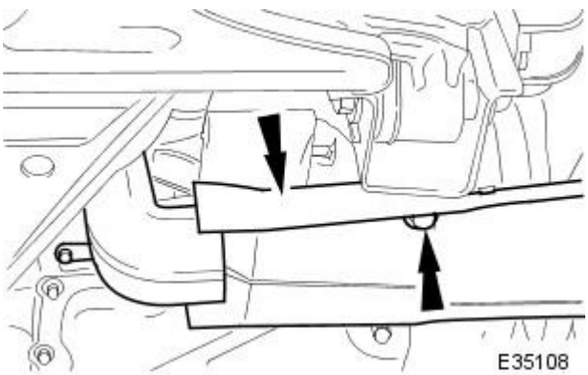

27. Fit generator cooling duct deflector.

- Position deflector over rear vertical duct.
- Slide deflector forward to engage center tang over undertray.
- Fit bolt and tighten to 17-23Nm.

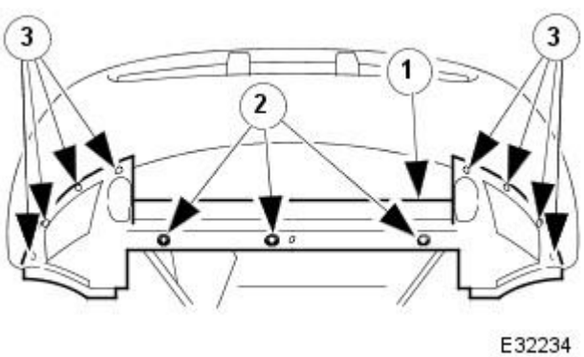

28. Fit undertray.

1. Position undertray.
2. Fit three screws fasteners.
3. Fit eight new scrivets.

29. Fit front wheels. Refer to section 204-04.

30. Remove stands and lower vehicle.

31. Lower four-post lift.

32. Remove engine support tool.

1. Release hook adjustment nuts.
2. Release hooks from brackets.
3. Remove special tool.

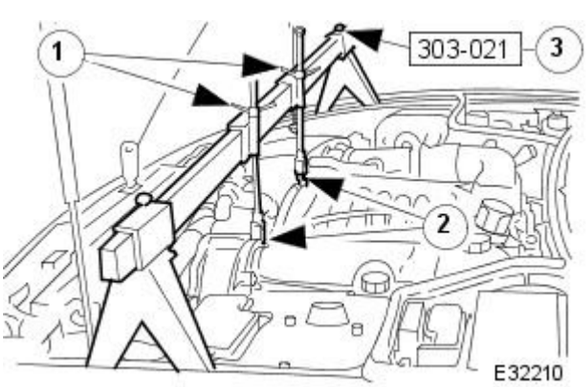

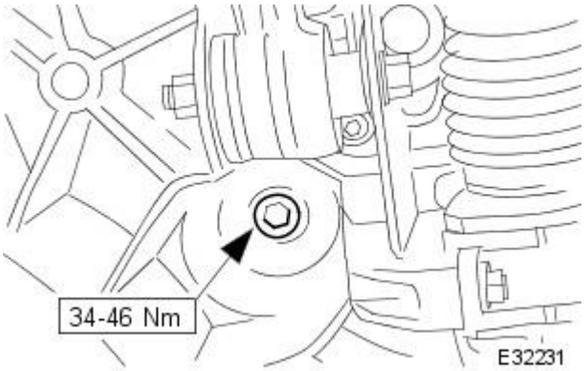

33. Secure front engine mountings to crossbeam.

- Tighten bolt.
- Repeat procedure to secure opposite-side mounting.

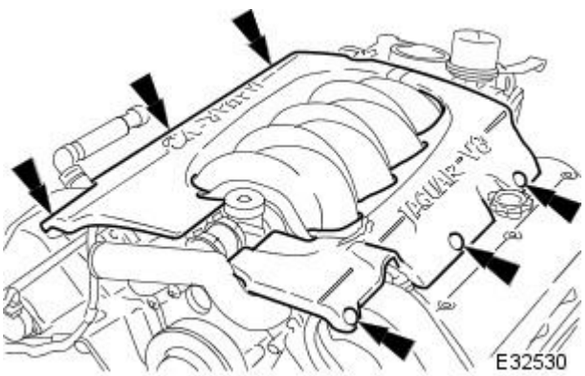

34. Fit engine covers (normally aspirated vehicles only).

- Secure pegs.

35. Connect battery ground cable. Refer to section 414-01: Battery Reconnection Procedure.

36. Bleed brake system. Refer to section 206-06.

37. Fill power-steering system. Refer to section 211-02.

38. Remove paintwork protection covers.

Uni-Body, Subframe and Mounting System - Front Axle Crossmember Front Bushing

Removal and Installation

Special Tool(s)	
E36448	Remover/Replacer Adaptor 204-116-05 (JD 143-5)
E36422	Crossbeam Bush Replacer 204-212 (JD 242)
E36423	Crossbeam Bush Remover 204-213 (JD 243)

Removal

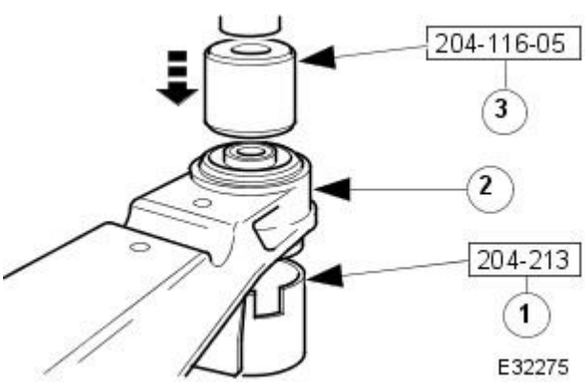

1. CAUTION: Replacement of nuts and bolts: Various thread-locking devices are used on nuts and bolts throughout the vehicle. These devices restrict the number of times a nut or bolt can be used. See section 100-00 for information.

Remove crossbeam. Refer to operation 76.10.05.

2. Using a hydraulic press, remove front mounting bush from the crossbeam.

1. Place special tool on the press-bed, with the tool cut-outs upper most.
2. Position crossbeam on press-bed, with special tool aligned underneath bush.
3. Align special tool on top of bush.

- Operate press to remove bush from crossbeam.

Installation

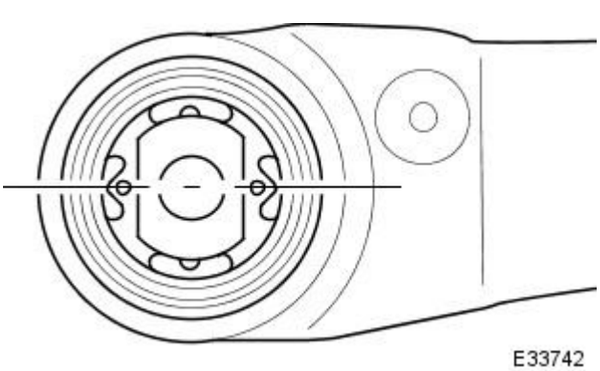

1. NOTE: The bush must be in the position shown when it is fitted to the crossbeam - viewed from the top of the crossbeam.

Invert the crossbeam and place it, onto the bed of the hydraulic press.

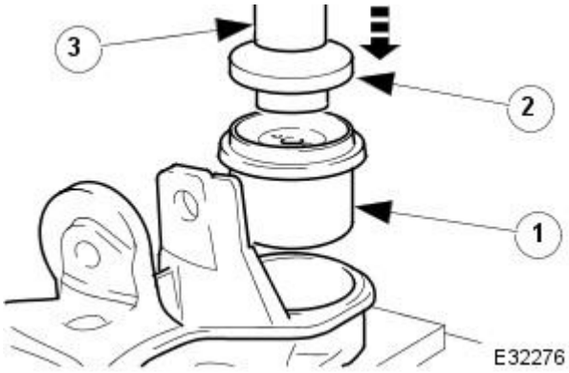

2. With assistance partially press the mounting bush into the crossbeam.

1. Align bush to crossbeam.
2. Align a suitable mandrel on top of bush.
3. Operate press and partially fit bush into crossbeam.

- Make sure bush is aligned correctly as shown in illustration above.

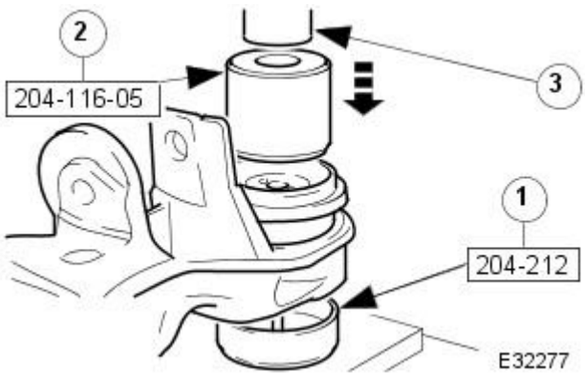

3. Press mounting bush, fully into crossbeam.

1. Position special tool under crossbeam, and align to bush aperture.
2. Align special tool to bush.
3. Operate press to fit bush into position.

4. Fit crossbeam. Refer to operation 76.10.05.

Uni-Body, Subframe and Mounting System - Front Axle Crossmember Rear Bushing

Removal and Installation

Special Tool(s)	
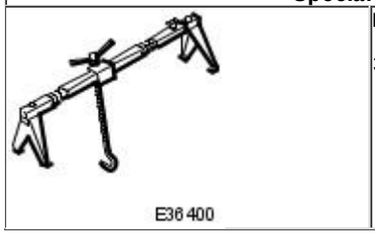 E36400	Engine Support Beam 303-021 (MS 53D)

Removal

1. CAUTION: Replacement of nuts and bolts: Various thread-locking devices are used on nuts and bolts throughout the vehicle. These devices restrict the number of times a nut or bolt can be used. See section 100-00 for information.

Position vehicle on a four-post lift.

2. Open the engine compartment to the service position.

3. Fit paintwork protection covers to fenders.

4. Disconnect battery ground cable. Refer to section 414-01.

5. Remove both engine covers.

- Release retaining pegs.
- Remove covers.

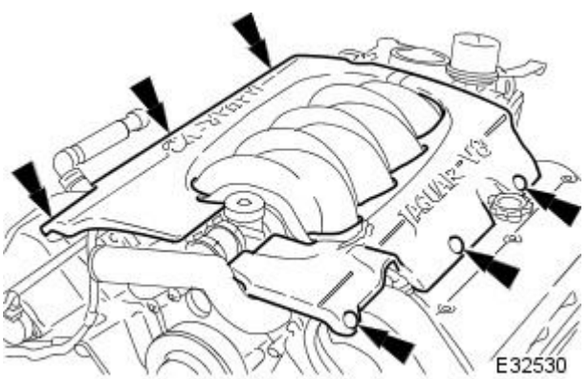

6. Support weight of engine.

1. Position tool in RH and LH fender channels and tighten beam fixings.
2. Engage hooks into engine front lifting eyes.
3. Tighten hook adjustment nuts until the weight of engine is supported.

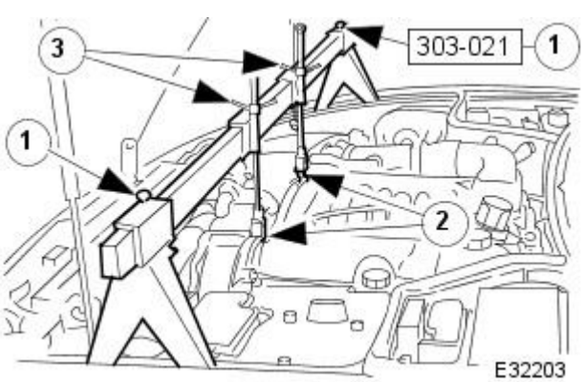

7. Position steering in the central position and remove ignition keys to lock steering.

8. Release both front shock absorber upper mountings from body.

1. Remove covers.
2. Vehicles fitted with adaptive damping : disconnect connector.
3. Remove nuts.

- Repeat procedure to release opposite-side shock absorber.

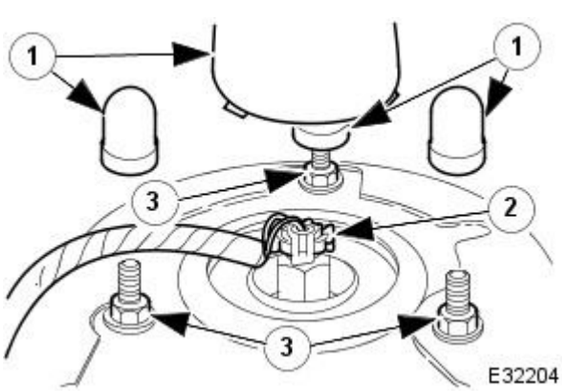

9. NOTE: Guide shock absorber upper mounting studs through body when raising front of vehicle.

Raise front of vehicle and support on stands. Refer to section 100-02.

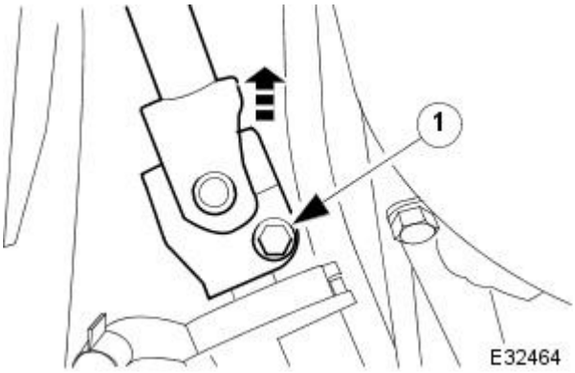

10. Release lower steering column from pinion shaft.

1. Remove bolt.

- Disconnect steering column.

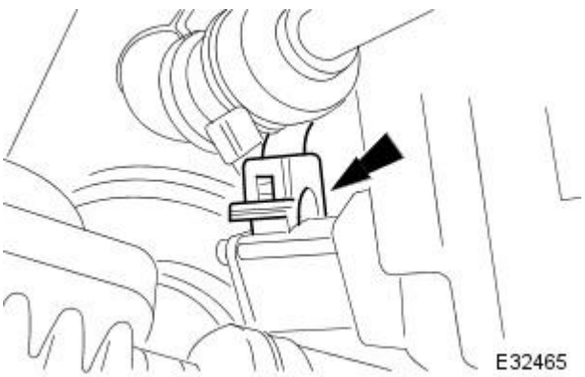

11. Disconnect connector from steering rack transducer.

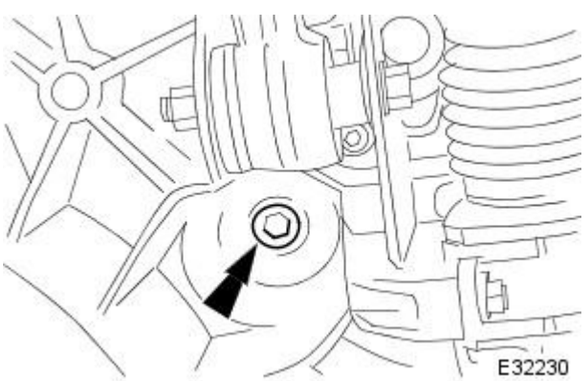

12. Release front engine-mountings from crossbeam.

- Remove bolt.
- Repeat procedure to release opposite-side mounting.

13. CAUTION: To prevent damage to the crossbeam, use a wooden block between the jack and crossbeam.

Using a suitable jack support weight of front crossbeam.

14. NOTE: The bolt situated directly above the wishbone will remain captive.

Release rear mounting from crossbeam.

- Remove bolts.

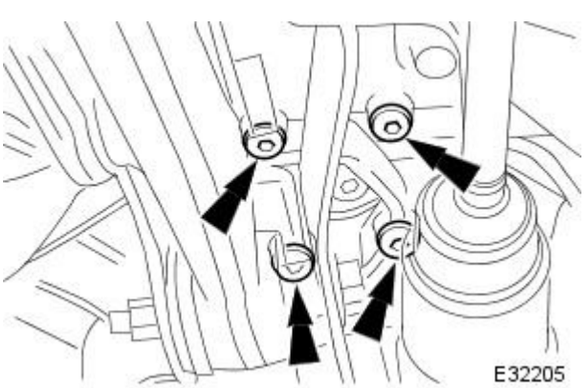

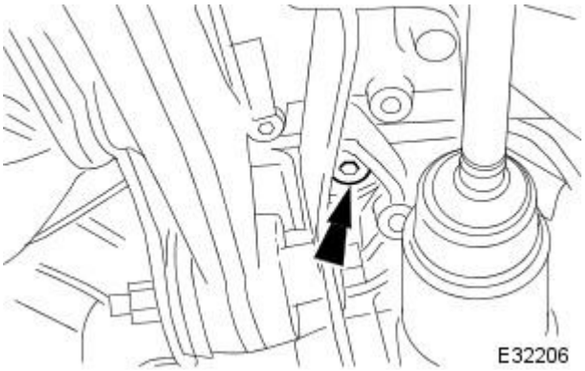

15. Release crossbeam rear mountings from body.

- Remove center bolt.
- Repeat procedure to release opposite-side mounting from body.

16. CAUTION: Take care not to damage power steering hydraulic-pipes when lowering crossbeam.

Lower crossbeam sufficiently to remove rear mounting.

17. Remove rear mounting.

18. Clean relevant parts.

Installation

1. Apply Loctite 270 or 243 to the rear-mounting captive bolt.

2. Position rear mounting to crossbeam.

3. Secure rear mounting to crossbeam.

- Align mounting.
- Fit and tighten bolts.

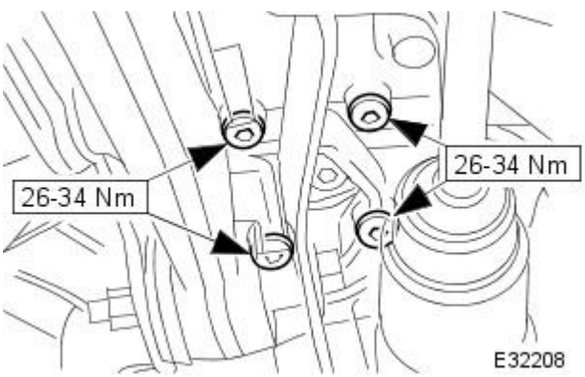

4. Raise crossbeam.

5. Secure crossbeam rear mountings to body.

- Fit and tighten bolt.
- Repeat procedure to secure opposite-side mounting to body.

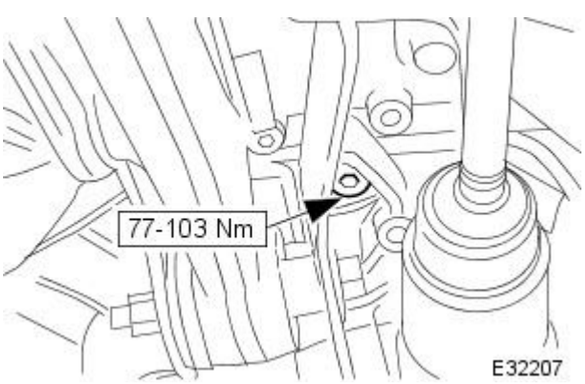

6. Lower and remove jack from beneath crossbeam.

7. Fit front engine mounting bolts, but DO NOT tighten at this stage.

- Repeat procedure on opposite-side mounting.

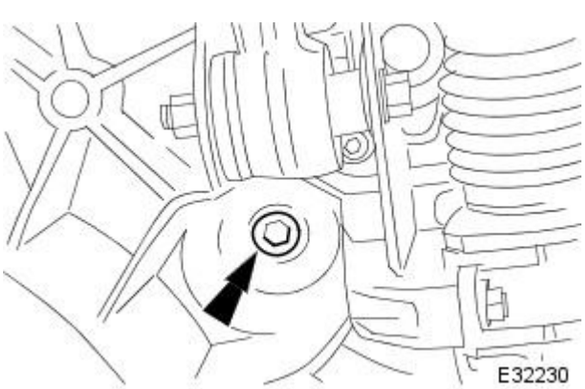

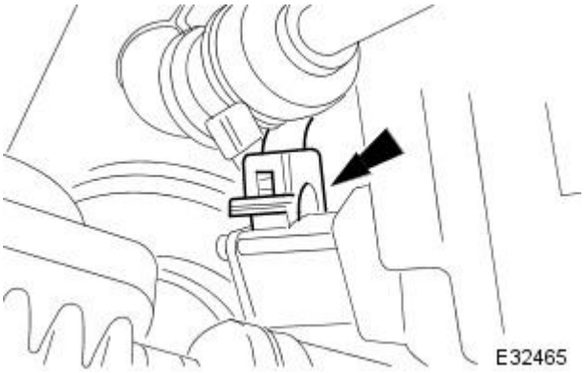

8. Connect connector to steering rack transducer.

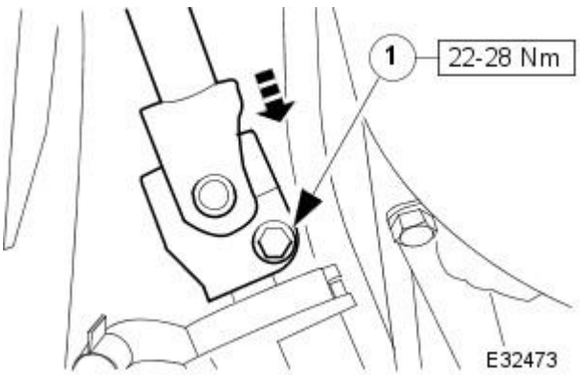

9. NOTE: Make sure steering wheel and road wheels are in the central position.

Connect steering column to pinion shaft.

- Align steering column to pinion shaft.
  1. Fit and tighten bolt.

10. NOTE: Guide shock absorber upper mountings into body apertures when lowering vehicle.

Remove stands and lower front of vehicle.

11. Secure shock absorber upper mountings to body.

- Fit and tighten nuts.
- Vehicles fitted with adaptive damping: connect connector.
- Fit covers.
- Repeat procedure to secure opposite-side shock absorber.

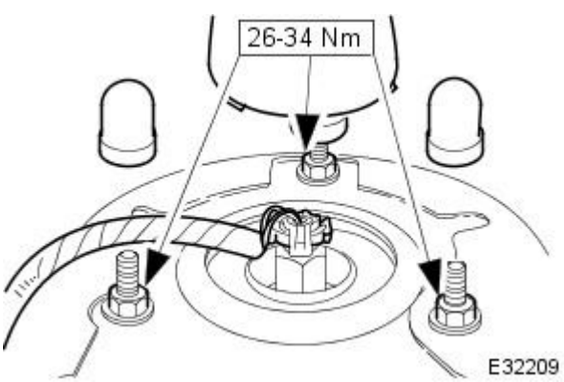

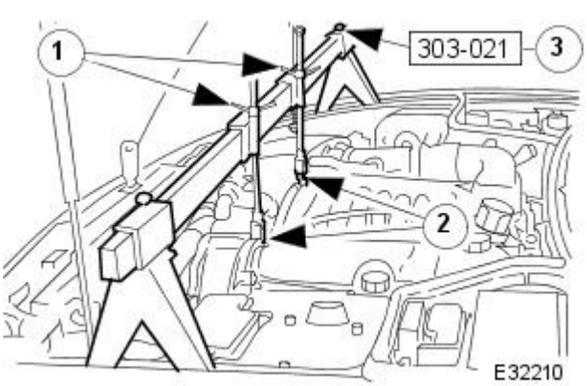

12. Release weight of engine.

1. Loosen hook adjustment nuts.
2. Remove hooks from lifting eyes.
3. Remove special tool.

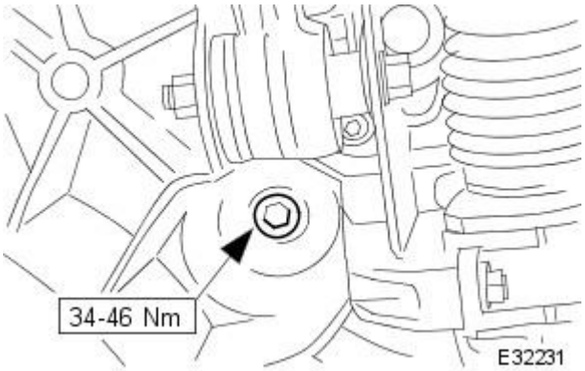

13. Secure engine mountings to crossbeam.

- Tighten bolt.
- Repeat procedure to secure opposite-side mounting.

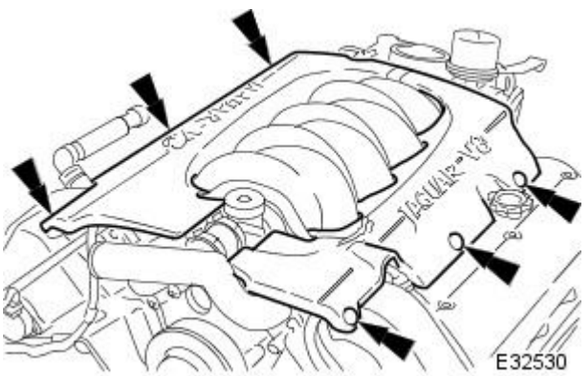

14. Fit both engine covers.

- Position covers to engine.
- Fit retaining pegs.

15. Connect battery ground cable. Refer to section 414-01, Battery Connection Procedure.

16. Remove paintwork protection covers.

Uni-Body, Subframe and Mounting System - Rear Axle Crossmember

Removal and Installation

Removal

1. CAUTION: Replacement of nuts and bolts: Various thread-locking devices are used on nuts and bolts throughout the vehicle. These devices restrict the number of times a nut or bolt can be used. See section 100-00 for information.

Raise vehicle on a four-post lift. Refer to section 100-02.

2. Remove both rear struts (convertible vehicles only).

- Remove ratchet straps securing drain tube.
- Remove four bolts.
- Remove struts.

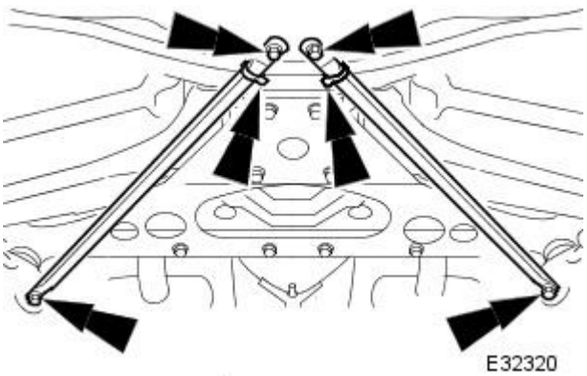

3. Remove bolts shown , from suspension subframe.

1. Remove bolts.
2. Remove nuts and bolts.
3. Remove nuts and bolts.

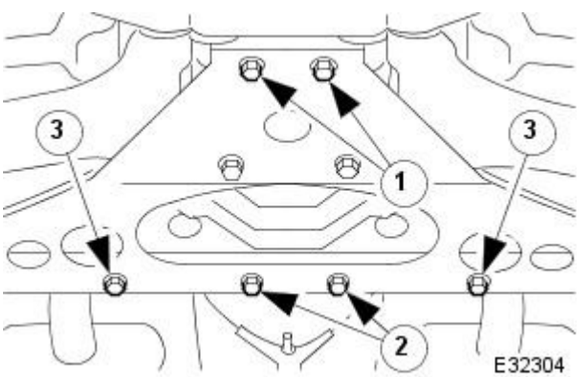

4. CAUTION: Position a piece of wood between the jack and the differential drive coupling.

Position a jack under the differential drive coupling and support the weight of axle assembly.

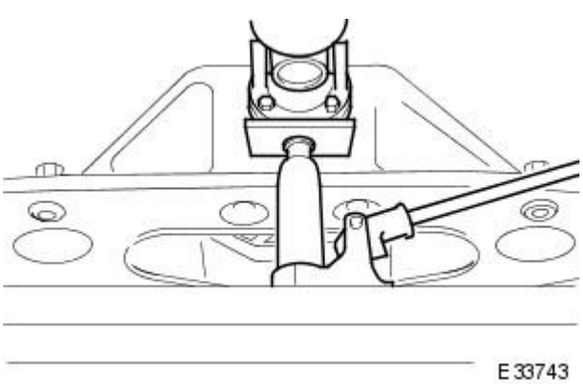

5. Remove both mounting brackets from the suspension subframe.

1. Remove bush center bolt from bracket.
2. Remove bolts securing bracket to body.

- Remove bracket.
- Repeat procedure to remove opposite-side bracket.

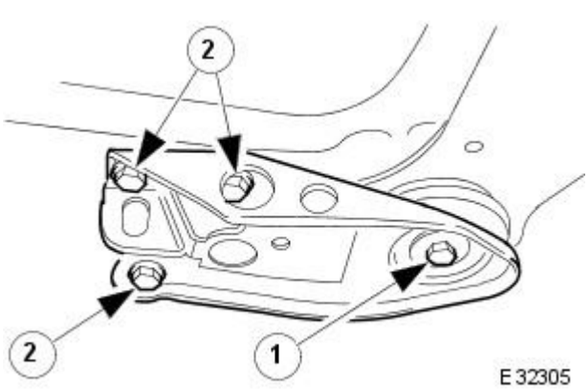

6. To allow for access, lower jack approximately 25 mm.

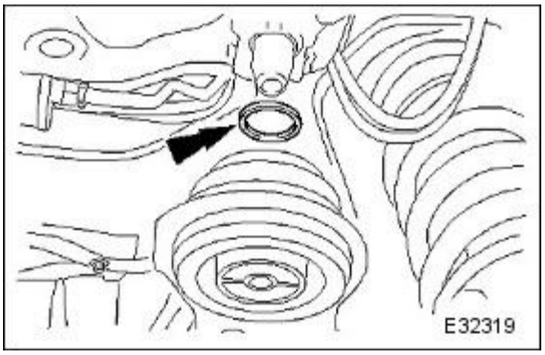

7. Remove and retain spacer from top of each bush.

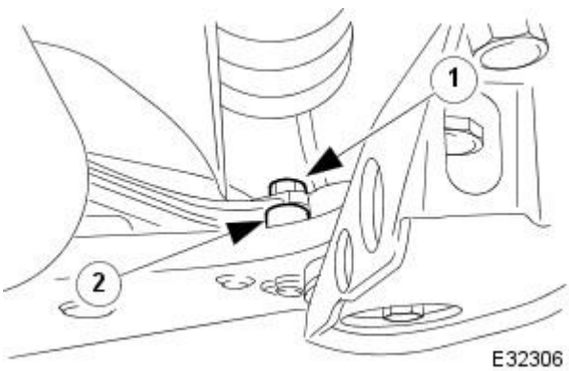

8. Remove bolts securing link assemblies to suspension subframe.

1. Remove bolt.
2. Make sure spacer remains captive in bracket.

- Repeat procedure to remove bolt from opposite-side of subframe.

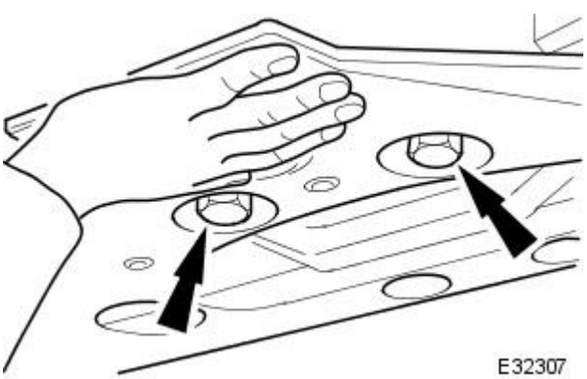

9. With assistance remove suspension subframe from the vehicle.

- Using hand pressure, support weight of subframe.
- Remove bolts.
- Remove subframe.

10. Clean relevant components and mating faces.

Installation

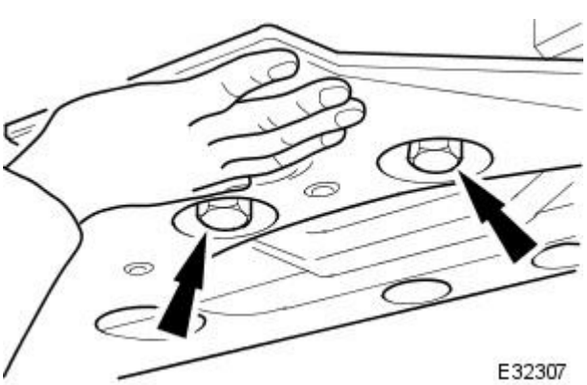

1. CAUTION: Make sure the fuel pump electrical lead does not become trapped when fitting the suspension subframe.

With assistance fit suspension subframe to vehicle.

- Position subframe to vehicle.
- Fit bolts shown, DO NOT tighten at this stage.

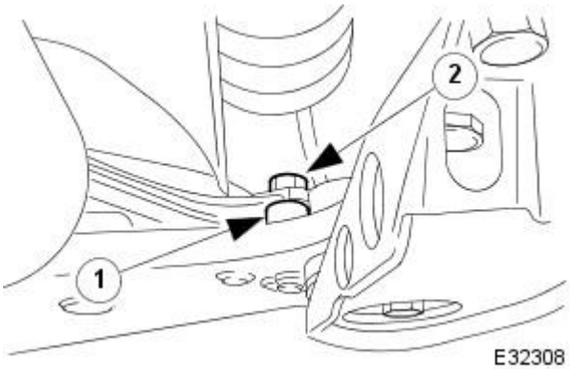

2. Fit bolts securing link assemblies to suspension subframe.

1. Make sure spacer is in position.
2. Fit bolt, DO NOT tighten at this stage.

- Repeat procedure to fit bolt to opposite-side of subframe.

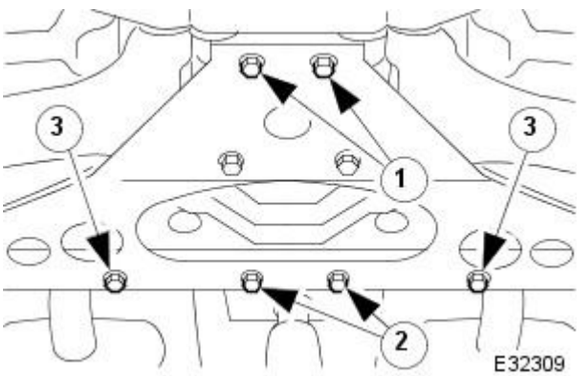

3. Fit bolts shown, to suspension subframe.

1. Fit bolts, DO NOT tighten at this stage.
2. Fit nuts and bolts, DO NOT tighten at this stage.
3. Fit nuts and bolts, DO NOT tighten at this stage.

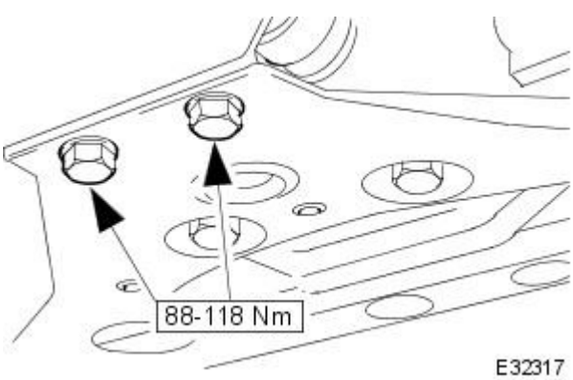

4. Tighten subframe bolts shown.

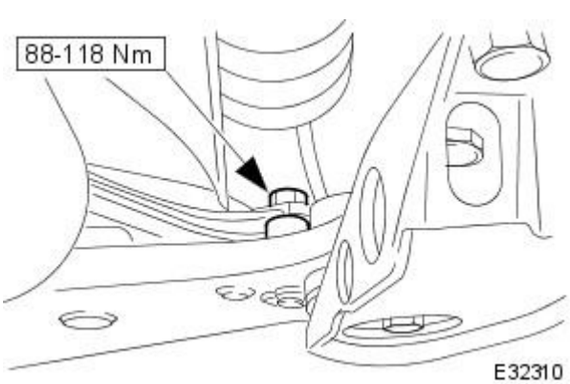

5. Tighten subframe bolts shown.

- Repeat procedure to tighten bolt on opposite-side of subframe.

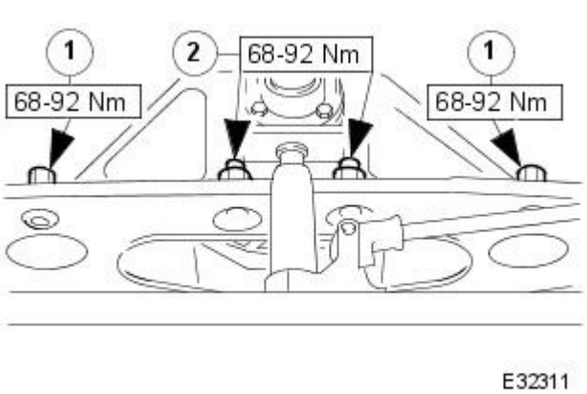

6. Tighten subframe nuts and bolts shown.

1. Tighten nuts.
2. Tighten nuts.

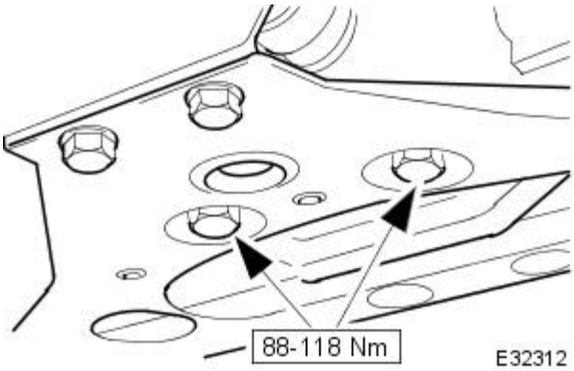

7. Tighten subframe bolts shown.

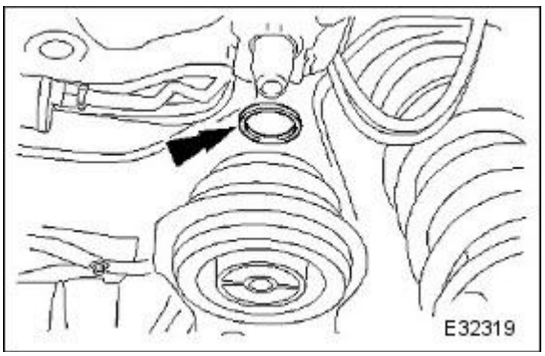

8. Position spacer into the recess of each subframe bush.

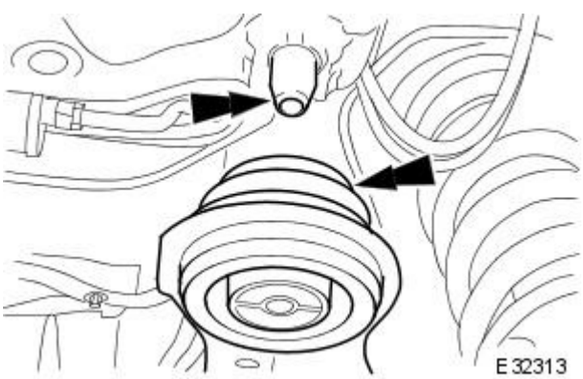

9. Locate subframe bushes onto the tapered body locations.

- Raise jack.

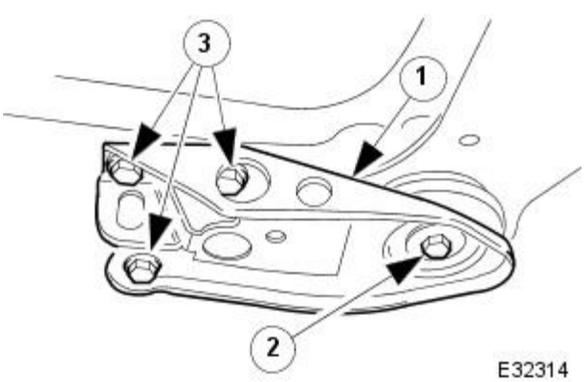

10. Fit suspension subframe mounting-brackets.

1. Position bracket to subframe.
2. Fit bush center bolt, DO NOT tighten bolt at this stage.
3. Fit bolts securing bracket to body, DO NOT tighten bolts at this stage.

- Repeat procedure on opposite-side mounting bracket.

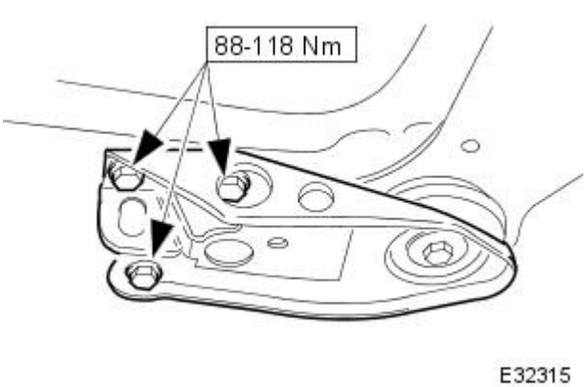

11. Tighten bolts securing mounting brackets to body.

- Repeat procedure on opposite-side mounting bracket.

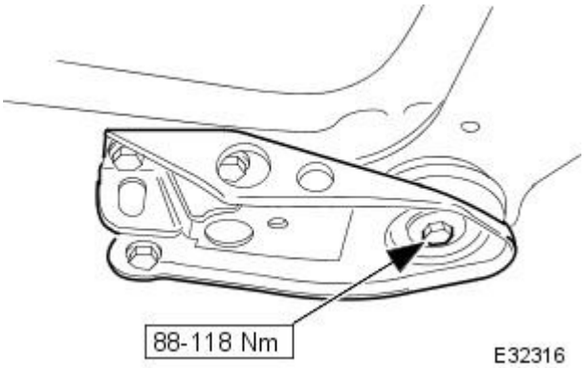

12. Tighten mounting-bracket , bush center-bolts.

- Repeat procedure on opposite-side mounting bracket.

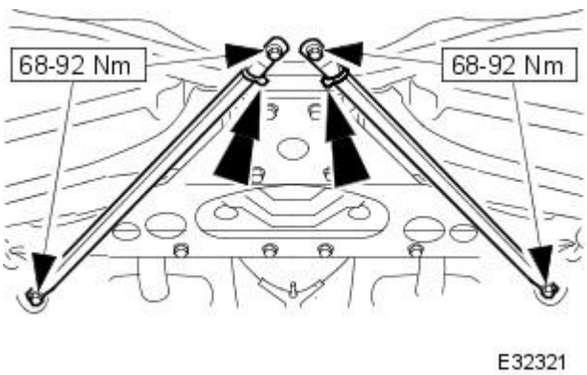

13. Fit rear struts (convertible vehicles only).

- Align struts and fit and tighten bolts.
- Secure drain tube to struts with tie straps.

14. Lower and remove jack.

15. Lower four-post lift.

Uni-Body, Subframe and Mounting System - Rear Axle Crossmember Bushing

Removal and Installation

Special Tool(s)	
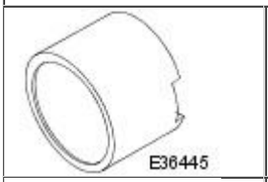 E36445	Remover/Replacer Suspension Bushes 204-116/02 (JD 143-2)
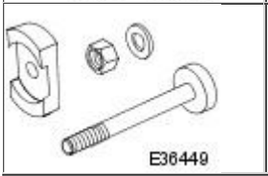 E36449	Remover/Replacer Adaptor 204-116/06 (JD143-6B)

Removal

CAUTION: Replacement of nuts and bolts: Various thread-locking devices are used on nuts and bolts throughout the vehicle. These devices restrict the number of times a nut or bolt can be used. See section 100-00 for information.

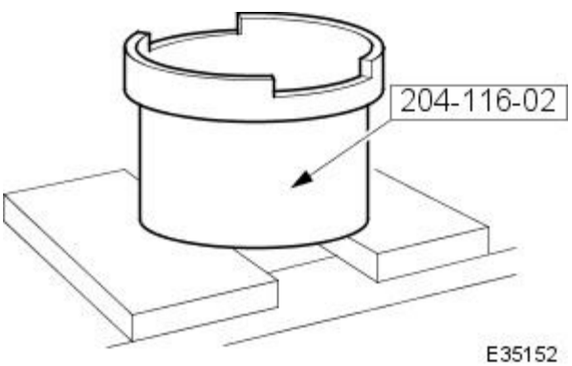

1. Remove suspension subframe from vehicle. Refer to 64.25.20.
2. Position special tool 204-116-02 on press-bed with the recesses uppermost.

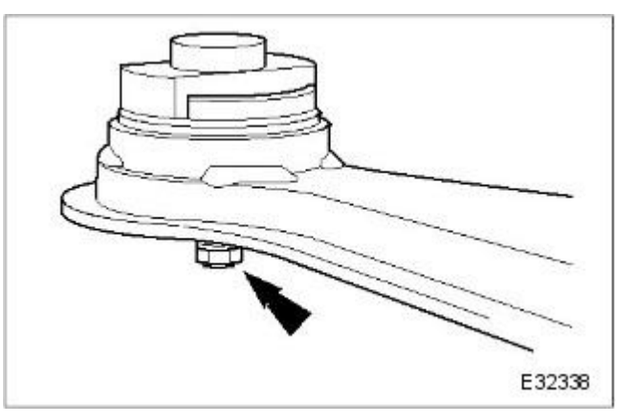

3. Remove nut and washer from tool.
   - Position special tool 204-116-06 on bush with recesses accommodating the bush rebound stops.
   - Install washer and nut on tool, but do not tighten nut at this stage.

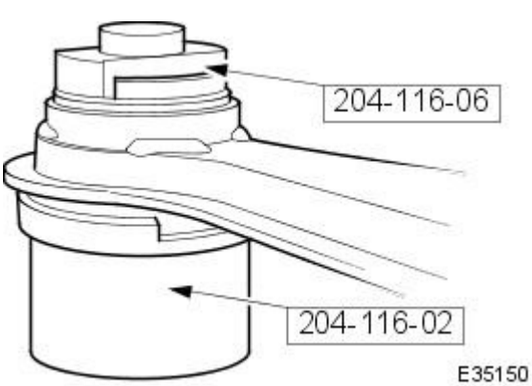

4. Invert subframe and position assembly on special tool 204-116-02, with subframe located in the recess.

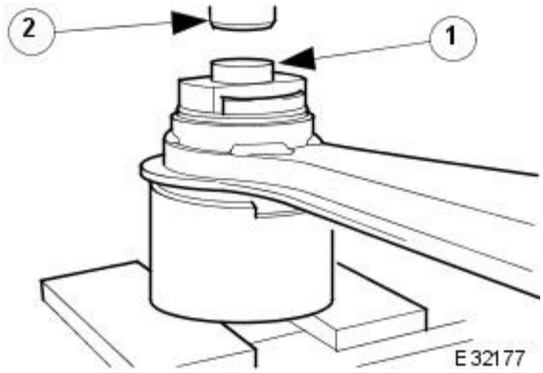

5. CAUTION: Ensure special tool 204-116-06 is correctly aligned and does not contact the bush housing bore.

Remove bush from subframe.

1. Align assembly with the press-ram.
2. Operate press to remove bush.

6. Remove bush from special tool and discard bush.

7. Thoroughly clean the bush-housing bore.

Installation

1. Use a coarse grade emery cloth to roughen the bush-housing bore, and mating surface of the bush.

2. Using an air line, remove residual dust from bush and housing mating surfaces.

3. Clean the bush-housing bore and bush with cleaning solvent (SPB3 Solvent 30) or equivalent.

4. Invert suspension subframe.

5. Mark bush position on sub-frame.

1. Stretch a length of thin cord across the center line of each bush location.
2. Below the string, place two pieces of masking tape diametrically opposite on the bore periphery.
3. Mark string position on the masking tape.

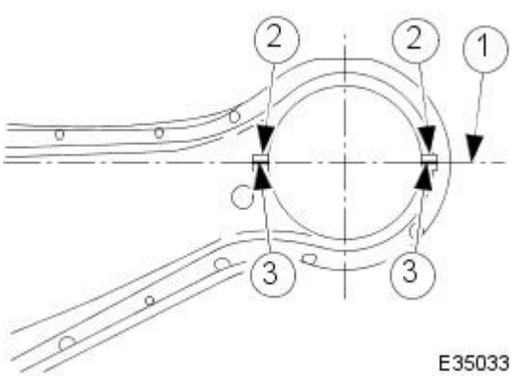

6. NOTE: New bushes are bonded in position using a rapid drying adhesive Application of this adhesive and fitting of the bush must be completed within 3 minutes. It is therefore strongly recommended that the procedure is rehearsed to ensure it can be completed within that period.

Position subframe on a hydraulic-press.

- Position special tool 204-116-02 on press-bed, with recesses uppermost.
- Position subframe on top of tool.

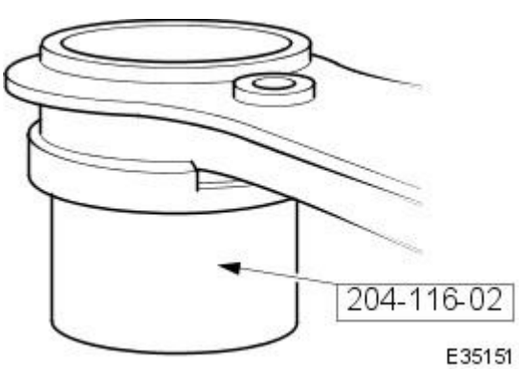

7. Apply 'Alphabond Rapid 101' epoxy adhesive to the shaded area of the bush (as shown), and corresponding area of the bush-housing bore.

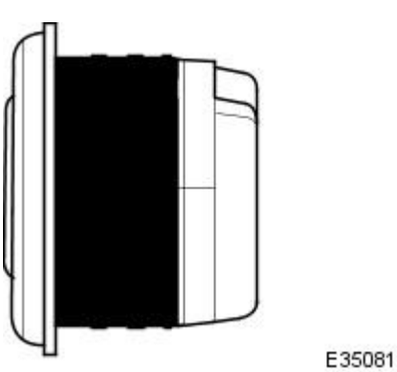

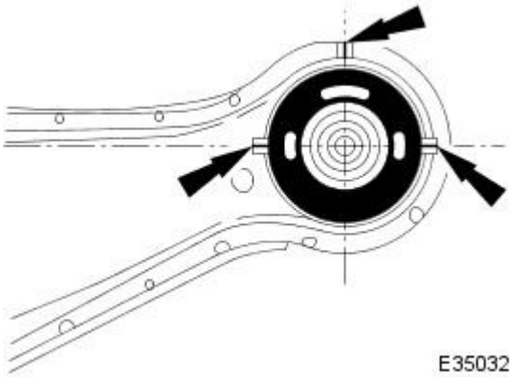

8. CAUTION: Bush alignment error must not exceed 5 degrees.

Aligning bush with subframe.

- Position bush with large single void facing forward.
- Align small void centers with masking tape markers.

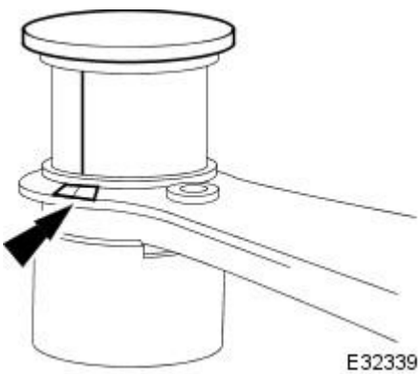

9. Install bush in housing.

- Position a steel plate over the bush, ensuring the plate is large enough to cover the rubber flange.
- Operate the press to install the bush.

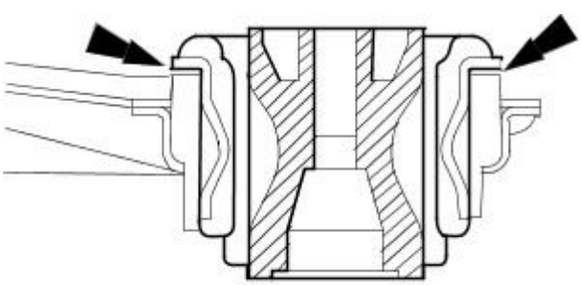

10. Ensure bush is fully seated in subframe.

- The clearance between the bush flange and subframe must not exceed 1.5 mm.

11. Ensure bush is aligned correctly in subframe as detailed in Step 8 or 9 as appropriate.

12. Wipe off excess adhesive from subframe and bush, and remove masking tape.

13. NOTE: Allow adhesive at least 30 minutes to cure, before installing subframe on vehicle.

Install suspension subframe on vehicle. Refer to 64.25.20.

www.JagDocs.com